PNEUMAX

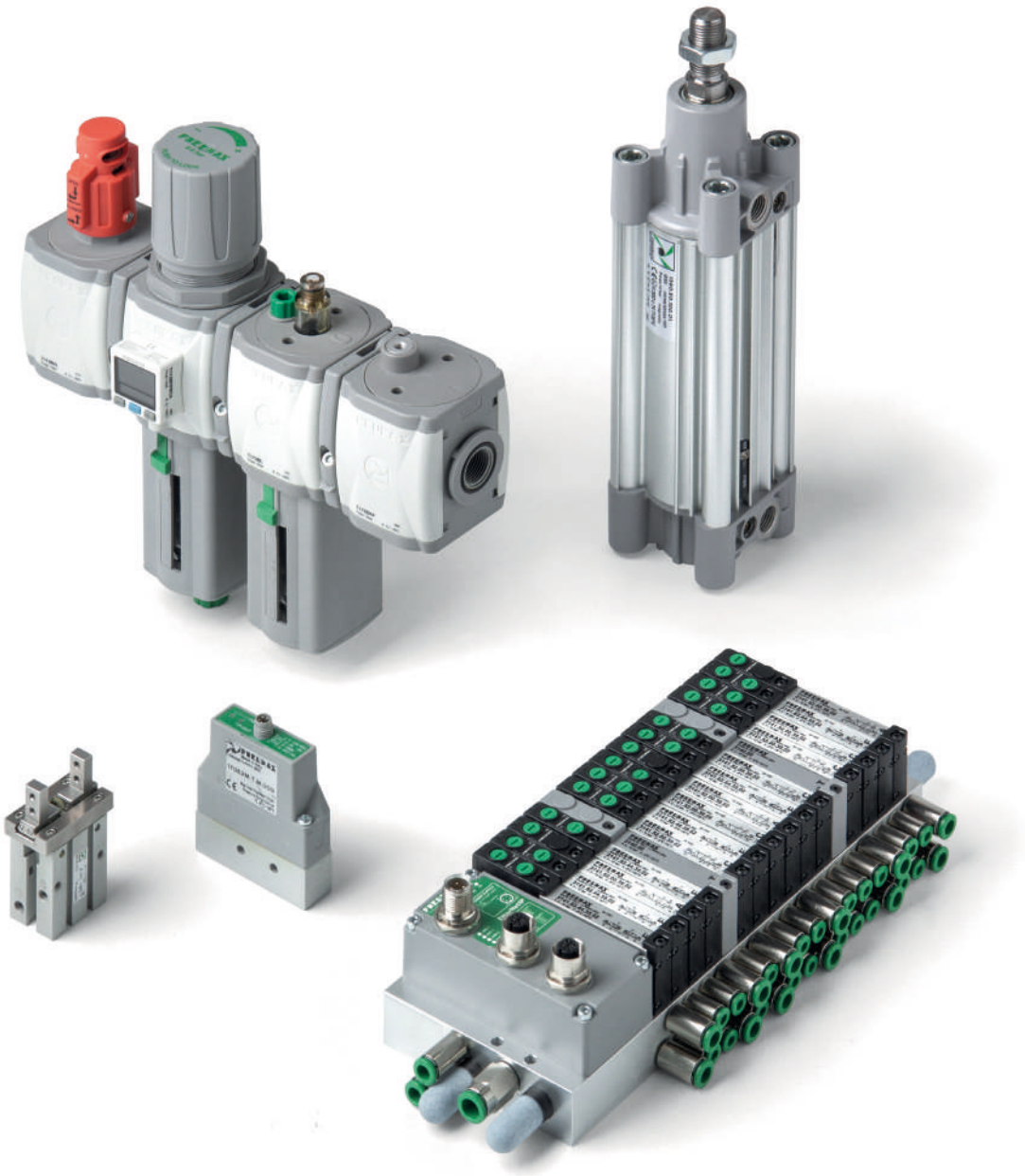

GENERAL CATALOGUE 2021

SOLUTIONS FOR PNEUMATIC AUTOMATION

General catalogue

Solutions for pneumatic automation

This catalogue includes
the product range manufactured by
Pneumax Industrial Automation Business Unit:
air service units and
pneumatic components
for air distribution and motion control.

Further documentation is available on our website **www.pneumaxspa.com**
with reference to **Vacuum Technology**, **Fittings**, **Electric Actuation**
and general catalogues which include the product range offered
by **Automotive and Process Automation Business Units**.

General index

Solutions for pneumatic automation

Introduction

About Pneumax 12

Section 01

Air distribution

Valves and solenoid valves

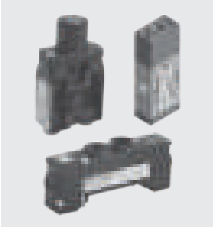

Spool valves and solenoid valves

Single and manifold versions, mechanical and manual or pneumatic command

Series 104	1.1	Series 800	1.68	Series 2100 Line-Flat-Base	1.123
Series 105	1.12	Series 888	1.77	Series 2400 Line-Flat-VDMA	1.139
Series 200	1.21	Series 400	1.90	Series 2600 Line-Flat-VDMA	1.162
Series T200	1.54	Series T400	1.109		

Direct operated solenoid valves

Pilot valves, high flow rate performance 2/2 ways and 3/2 ways, version miniaturized available as well

Series 300	1.178	Series CNOMO	1.201	UL solenoid coils	1.206
Solenoid coils	1.193	Series S	1.204		
Series M (mechanical)	1.196	300-UL solenoid coils	1.206		

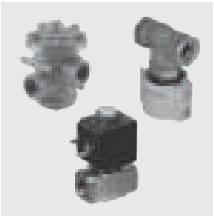

Poppet valves and solenoid valves

3/2 & 2/2 valves and solenoid valves for compressed air and vacuum, with aluminium and technopolymer body. 2/2 pad valves, shutter seating inclined solenoid valves for fluids

Series 700	1.208	Series T771	1.241	Series PVF	1.282
Series N776	1.221	Series PVA	1.249		
Series T772-773	1.226	Series F300	1.253		

“Namur” valves and solenoid valves

Namur valves and solenoid valves according to standard ISO 5599/1 available in 3 sizes with M12 5/2, 5/3 connectors, aluminium and technopolymer body

Series 514/N	1.283	Series 514	1.290	Series 515	1.297
Series T514	1.285				

Overall dimensions and technical information are provided solely for informative purposes and may be modified without notice

ISO 5599/1 valves and solenoid valves

Valves and solenoid valves according to standard ISO 5599/1 available in 3 sizes with M12 5/2, 5/3 connectors, aluminium and technopolymer body

Series 1000 1.303
Series 1000-M12 1.320

Accessories

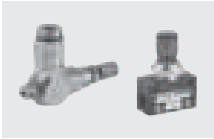

Pneumatic circuit accessories

Flow control valves, quick exhaust valves, selectors, silencers, unidirectional valves, manifolds, blocking valves, economizers, gang mounting manifolds, spry valves

Series 600 1.327

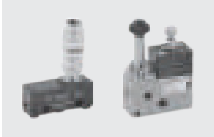

Complementary valves

Pressure switches, impulse generators, timers, two hands safety valve, oscillator valve, signal amplifier, progressive start up valve, high-low pressure device

Series 900 1.341

Blocking valves

Unidirectional and bidirectional blocking valves, aluminium and technopolymer versions, with G1/8”- G1/4”- G3/8”- G1/2” connections

Series 50-T50 1.349

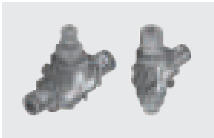

Function fittings

Miniaturized logic function with technopolymer body:
RFU, RP, VB, VSR, VS-or, VS-and, IP, AP, RP+IP, VB+RFU, VB+VSR

Series 55-TecnoFUN 1.354

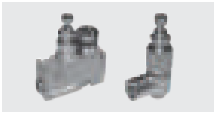

Miniaturised pressure regulators

Brass versions rod G1/8” & with technopolymer body and integrated gauge version

Series 1750 - 1760 1.369

Compact fittings for lubrication

Nichel plated brass compact fittings, with straight male adaptor

Series Mini-RAP 1.371

Valves and solenoid valve manifolds

Wide range of multipolar & serial system, available with main fieldbus protocol

Series 2700 - ISO15407-2 1.373
Series 2300 Enova 1.400
Series 2200 Optyma-S 1.421
Series 2200 Optyma-Sc 1.448
Series 2500 Optyma-F 1.455
Series 2500 Optyma-T 1.486
Series 3000 1.520

Section 02
Air treatment

Air service units
Wide range of components for compressed air treatment, available in aluminium, technopolymer and steel, in several sizes with connections from 1/8" to 1" and flow rates up to 8000 Nl/m

Series AIRPLUS 2.1
Series 1700 2.88
Series 1700 Steel line 2.159

Proportional technology
The proportional pressure regulators are available in 3 sizes, standard, CANopen® and IO-Link, or miniaturized versions

1700 standard 2.172
1700 miniaturized 2.188

Measuring devices
Digital pressure switches and pressure gauges, panel mounting or manifold versions

Pressure switches Series DS 2.204
Pressure gauges Series DS 2.206

Pressure booster
3 sizes aluminium pressure boosters available or technopolymer with 2:1 compression ratio

Series 1700 2.208
Series P+ 2.213

Section 03
Pneumatic actuation

Cylinders with piston rod according to standard

ISO 6432 Microbore cylinders
Versions available: with threaded end caps, rolled end caps, aluminium, stainless steel and technopolymer versions

Series 1200 Threaded end caps cylinders 3.1
Series 1200 Rolled end caps (MIR) 3.4
Series 1200 Rolled end caps (MIR-INOX) 3.8
Series 1200 TECNO-MIR 3.10
Series 1200 Steel line 3.12

CNOMO-CETOP-ISO cylinders
Cylinders manufactured according to standards CNOMO, CETOP and ISO: standard versions, through rod versions, tandem push with common rod, tandem push with independent rods or opposed tandem with common rod

Series 1303-1304-1305-1306-1307 3.30

ISO 15552 cylinders
Cylinders according to ISO 15552 with bores from Ø32 to Ø200 mm and strokes up to 1250 mm. Available versions: ECOPLUS with aluminium or technopolymer end plates, ECOLIGHT optmized in weight and dimensions, Steel line completely in stainless steel, round tube versions tie rod (Ø250-Ø320 mm)

Series 1319-1320-1321 3.40
Series 1348-1349-1350 3.43
Series Ecoplus 3.46
Series Ecolight 3.50
Series 1315 Round tube 3.68
Series Inox Steel line 3.71

ISO 15552 Hydro-pneumatic speed control cylinders
ISO 15552 Hydro-pneumatic speed control cylinders with internal hydraulic circuit for movement control

Series 1450-1463 3.81

Overall dimensions and technical information are provided solely for informative purposes and may be modified without notice

ISO 21287 Compact cylinders

Compact cylinders according to standard ISO with integrated slots suitable for sensors mounting without adaptors. Bores from Ø20 to Ø100 mm. Versions with end stroke adjustable pneumatic cushioning are also available according to ISO 21287

Series Ecompact **3**.87

Cylinders with Piston rod not according to standard

Threaded body microbore cylinders

Special performance microbore cylinders with hexagonal or round body and either completely threaded or threaded with a plain rod ending

Series 1200 **3**.103
Special performance (1213-1273)

Non rotating cylinders

Non rotating cylinders twin rod version, available with bores from Ø32 to Ø100 and strokes up to 500 mm

Series **3**.105
1325-1326-1345-1347

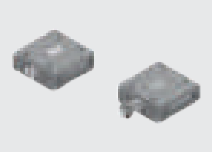

Flat cylinders

ECOFLAT cylinders available with sizes from 25 to 63 mm and strokes up to 300 mm. Profiled tube has two “T” slots to host sensors 1580._, MRS._, MHS._. without adaptors. Two additional connections are also available on rear cover for cylinder feeding

Series ECOFLAT **3**.108

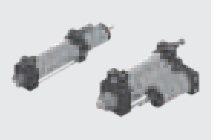

Hydraulic speed control cylinders

Hydraulic speed control cylinders outward/inward control, and lateral or in-line tank. Available with SKIP valve (accelerating device) and blocking valve (STOP)

Series 1400 **3**.115

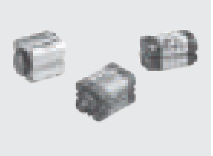

Short stroke & compact cylinders

Short stroke & compact cylinders with bores from Ø20 to Ø100 mm, available in single and double acting versions, tandem and through rod with magnetic piston versions. The Europe version is compliant with the ISO or UNITOP standard (depending on bores), while the Europe-S versions have connections and rods accordingaccording to the ISO 15552 standard

Series 1500 **3**.127
Europe **3**.136
Ecompact-S **3**.144

Multimount cylinders

Multimount cylinders available with bores from Ø10 to Ø25 mm, with strokes up to 50 mm and with magnetic piston versions

Series 6500 **3**.149

Guided compact cylinders

These cylinders are available in sizes Ø32 to Ø63 mm, and comprise a single compact cylinder with integral guide rods, The rod guide is available in two styles: self-lubricating bronze bushes and bearing bushes

Series 6100-6101-6110 **3**.152

Slide cylinders

Slide cylinders manufactured with bores from Ø8 to Ø25 mm, with strokes up to 150 mm. Available with simple and double regulation end stroke and also with front and rear shock absorber

Series 6600 **3**.168

Section 03
Pneumatic actuation / **Cylinders with piston rod not according to standard (following)**

Slide units

Twin-rod linear guide units with bores from Ø10 to Ø32 mm, and with control unit with bronze bush versions, with control unit with bearing bush versions. Are also available the through twin-rod slide units and the compact slide units

Series 6200 **3**.178
Series 6210 **3**.184
Series 6700 **3**.189

Rodless cylinders

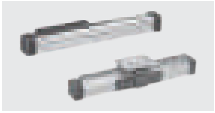

Mechanically coupled

Mechanically coupled cylinders with bore from Ø16 to Ø63 mm, and strokes up to 6000 mm, available also with linear control unit

Series 1605 **3**.196
Series 1600 Ø16 mm **3**.207

Cable driven

Cable driven cylinders with cable linear translation system

Series 1601 **3**.212

Rotary actuators

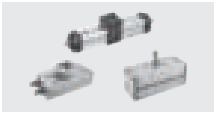

Rack & pinion rotary actuators

Double or single rack & pinion rotary actuators

Series 1330 **3**.213
Series 6400 **3**.217
Series 6411 **3**.221

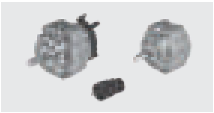

Vane type rotary actuators

Vane type rotary actuators with the shaft that runs into ball bearings, available with sizes from Ø10 to Ø100 mm

Series 6420 **3**.225

Handling

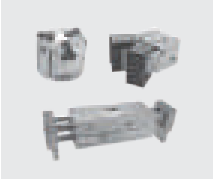

Pneumatic grippers

Pneumatic grippers with 2 fingers angular opening (-10° to +30°), wide opening 180° or 3 parallel fingers

Series 6301 **3**.236
Series 6303 **3**.242
Series 6311 **3**.248
Series 6302 **3**.239
Series 6310 **3**.245
Series 6312 **3**.251

Magnetic sensors

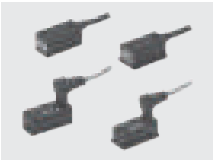

Standard series

Magnetic sensors with Reed type or Hall effect

Series SA **3**.254

Overall dimensions and technical information are provided solely for informative purposes and may be modified without notice

Miniaturized series

Miniaturized series with Reed and Hall style versions, available with rectangular, square, square section CURS approved, and round section versions

Series SR	**3**.263	Series SQ	**3**.265	Series ST	**3**.266
Series SU CURS	**3**.264				

Accessories and fixing devices

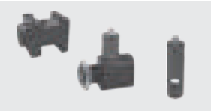

Piston rod lock

Piston rod lock for cylinders with bores from da Ø12 to Ø125 mm

Series 1260 - 1320	**3**.269

Linear guides

Linear control units Series 1200 (Ø20-25 mm) and Series 1320 (da Ø32 a Ø80 mm)

Series 1260 - 1320	**3**.271

Shock absorbers

Shock absorbers with M8x1 - M10x1 - M14x1,5 - M20x1,5 - M27x1,5 threads

Series 6900	**3**.273

Appendix

A

Pneumatic symbols	**A**.1
Dimensioning	**A**.4
Unit of measure, conversion tables	**A**.13
Alphanumeric index	**A**.17

Overall dimensions and technical information are provided solely for informative purposes and may be modified without notice

Technologies and competence since 1976

The excellence of Made in Italy in the world for over 40 years

Founded in 1976, **PNEUMAX S.p.A.** is now one of the major international producers of components and systems for automation, leader of the Group of the same name made up of 25 sales and production companies that employ 730 collaborators throughout the world. Continuous investments in research and development have allowed **Pneumax** to broaden its offer of standard products and customised solutions implementing not only the consolidated pneumatic technology but also electrical actuation and fluid control components.

The aim to offer increasingly specialised services and applicative competences has led to the creation of 3 dedicated Business Units, respectively industrial automation, process automation and automotive.

AUTOMOTIVE

INDUSTRIAL AUTOMATION

PROCESS AUTOMATION

Think Global Act Local

The certainty of a partner always by your side

Pneumax target has always been to provide a complete service both in the pre-sales and after-sales service phases all over the word. The Pneumax network reflects corporate values and vision and at the same time enhance the peculiarities of the different markets and sectors in which it operates. Constant investments aimed at strengthening structures, technologies and skills make Pneumax a real technological partner. Human competence and smart technology represent the essential combination for the creation of quality products.

An international network

Through a network comprised of branches and exclusive distributors, Pneumax operates in over 50 countries around the world, to support its customers throughout every stage of the supply process, from applicative pre-sales analysis to after-sales assistance.

- ▶ Headquarters
- ○ Branches
- ● Distributors

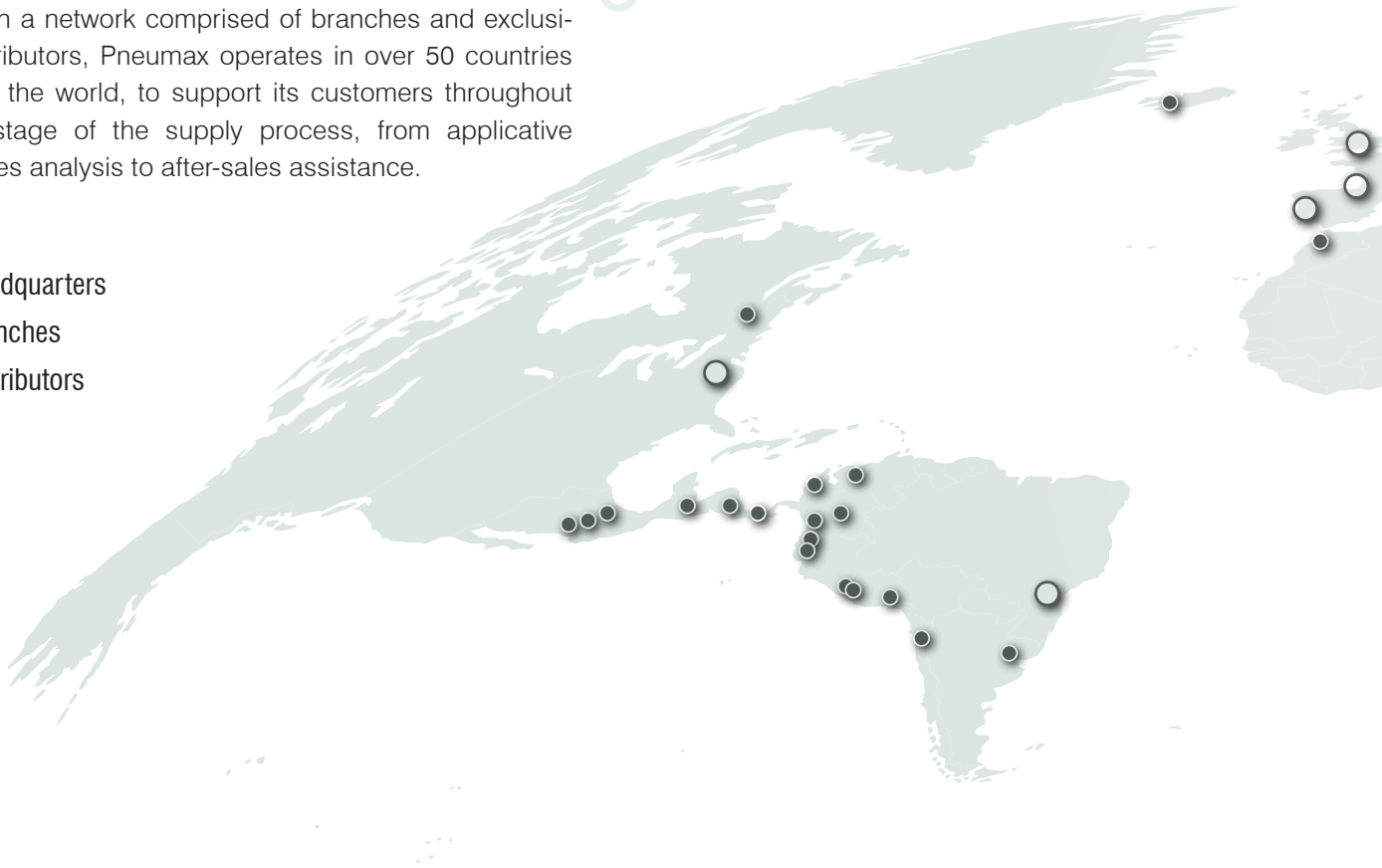

Overall dimensions and technical information are provided solely for informative purposes and may be modified without notice

Pneumax Business Attitude

An operational model that stems from the capacity to combine sectorial, technological and applicative competences through the collaboration of customers with our industry Business Specialists and with Product Specialists focused on products and technologies, the most effective solutions are created considering the **TCO** (Total Cost of Ownership) relative to the product's entire life cycle.

BUSINESS SPECIALISTS
Dedicated competences
- Sectors and Applications

PRODUCT SPECIALISTS
Specific knowledge
- Products and Technologies

SALES ENGINEERS
Worldwide Presence
- Relationship management

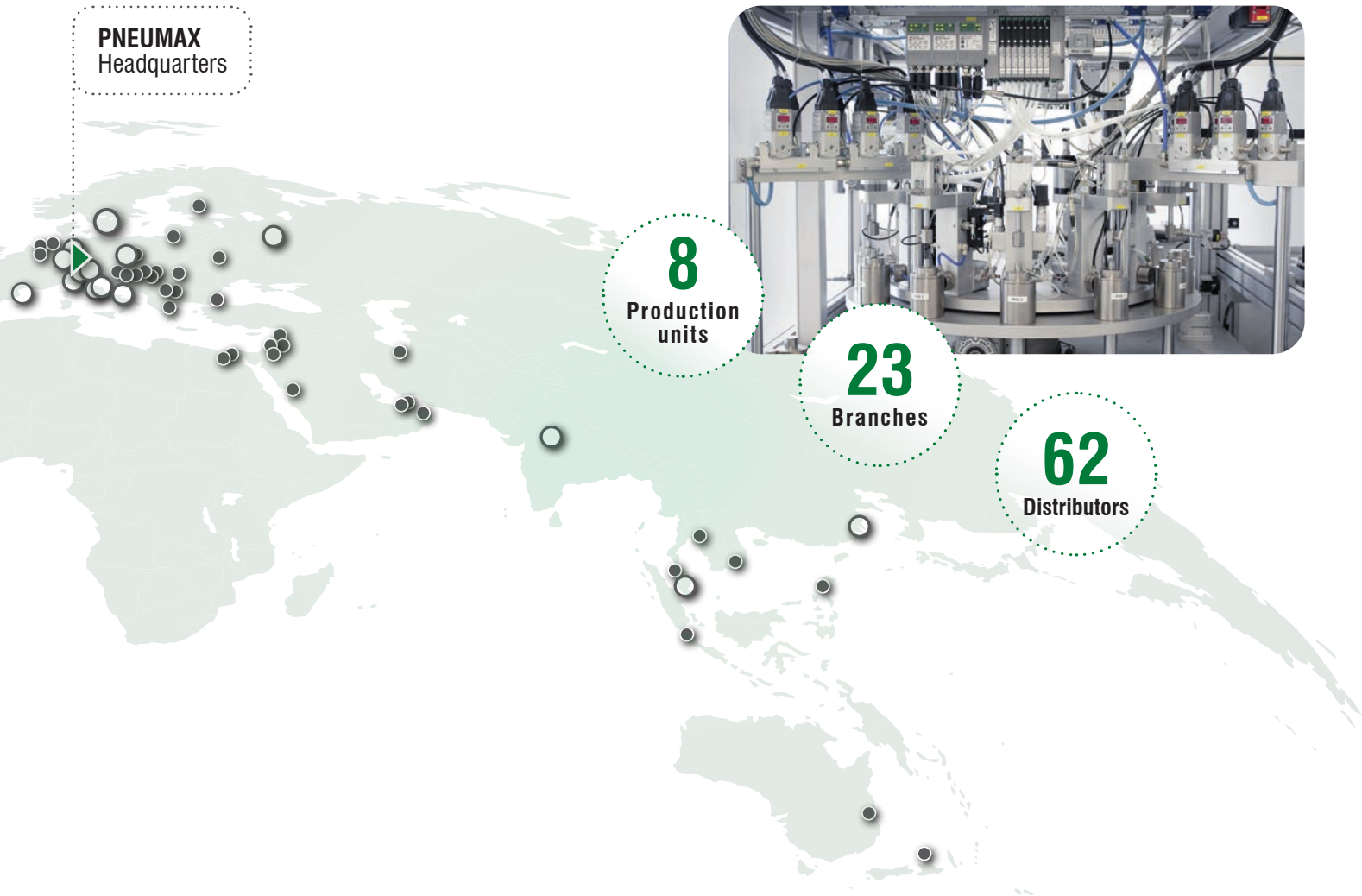

Products and Technologies

The value of the solution

Pneumax's technological offer includes various technologies, from pneumatic actuation to electrical actuation, to components for the control of liquid and gaseous fluids, to offer the best solution in every applicative context.

Pneumatic technology

Electric actuation

Fluid control

Special Solutions Services and Products

The supply of custom solutions has always been Pneumax's flagship service. Experience, competence, organisation and use of the most advanced production technologies are at the base of the capacity to offer customised products and services designed and created to fulfill the needs of every single customer.

- **Mechatronic Solutions**
- **Integrated cabinets and systems**
- **Special Processing**
- **Custom Treatments**
- **Special Materials**
- **Customised testing procedures**

Overall dimensions and technical information are provided solely for informative purposes and may be modified without notice

Industrial automation

The Business Unit that produces components and systems for industrial automation represents the core of Pneumax Spa. Founded to create pneumatic components, the company has constantly invested to broaden the offer of products and technologies, implementing not only the consolidated pneumatic actuation but also electrical actuation and fluid control components.

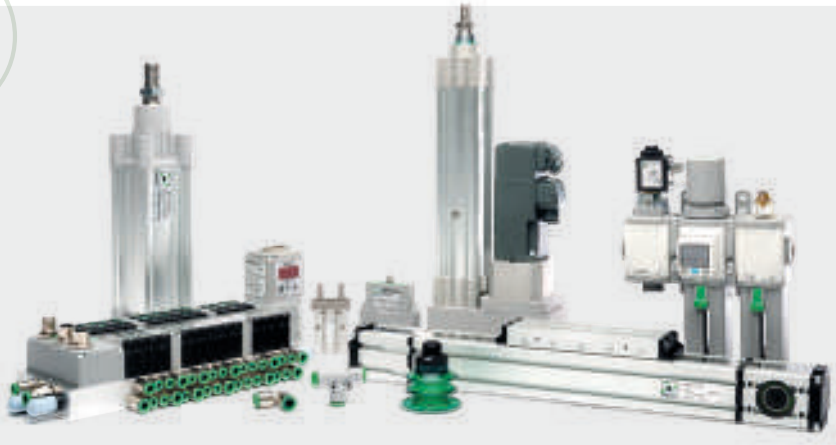

Process automation

The desire to develop the range of products suitable for use in “process” related sectors that require dedicated materials like stainless steel or special performance such as working pressure in Oil & Gas, has led Pneumax to create a Business Unit dedicated entirely to process automation.

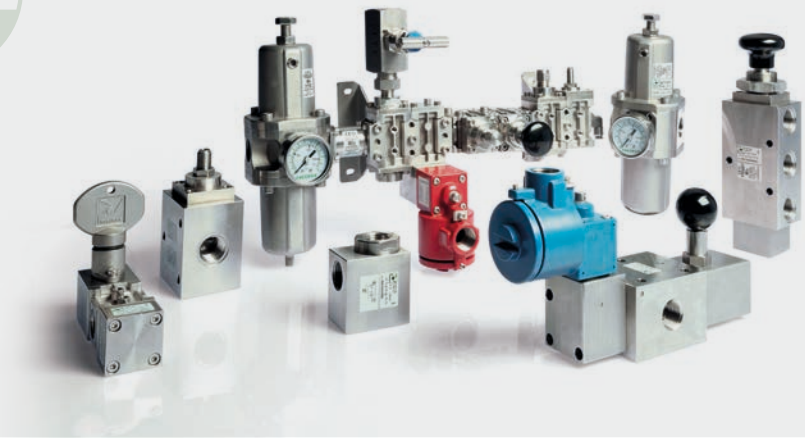

Automotive

The Pneumax Automotive division offers a complete range of products dedicated to the production lines of the industry, with a special focus on Body in White applications. In fact Pneumax’s offer includes clamping units, pin packages, grippers, power pivots and complete multi axes positioning systems.

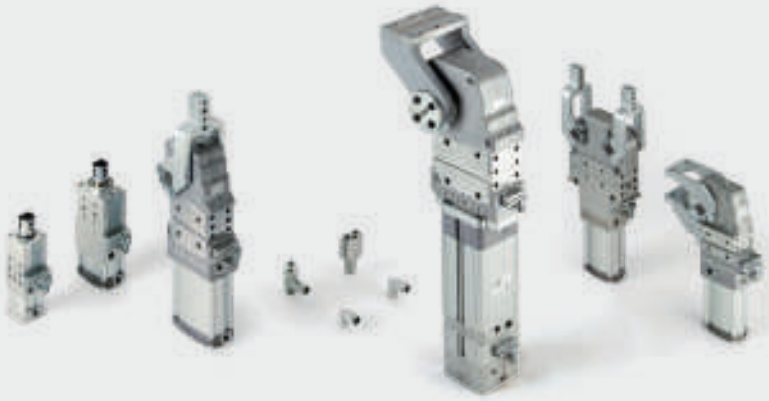

Total Quality Management

The highest quality of products and processes guaranteed throughout the supply chain

At Pneumax, Total Quality is an "operating style" constantly nurtured by ongoing training at all levels and an awareness of shared "knowledge" as a corporate asset essential to the company's success. Choosing to operate under a **Total Quality System** means implementing management methods and tools that involve all staff and enable **constant monitoring of process efficiency and product quality**, starting from the raw materials and the components necessary to make them and continuing through processing and assembly. Pneumax's manufacturing operations are concentrated at the Lurano production facilities in the province of Bergamo while fittings are manufactured by Titan Engineering, a Pneumax Group Company located in San Marino.To ensure the greatest reliability for our customers, the best suppliers are selected, often right on-site, and mechanical processing is carried out in-house by Supermeccanica another company belonging to the Pneumax Group.

Overall dimensions and technical information are provided solely for informative purposes and may be modified without notice

System and Product Certifications

- SIL certificates of compliance with **IEC 61508** standards
- **UL**
  Product in compliance with US standards
- **EAC**
  Certificate of conformity for the free circulation of products in the Euro-Asian Economic Community
- **ISO 45001:2018**
  Health and safety management system
- **CSA**
  Product in compliance with Canadian standards
- Compliance with Machinery Directive **2006/42/CE**
- **ISO 14001**
  Environmental management systems
- **ISO 9001**
  Quality management system
- Compliance with **ATEX 2014/34/UE** directive
- Well Tried Components **EN ISO 13849**, suitable for application in safety circuits

Product Certifications:

ATEX CE Ex II 2 GD c IIC
: CE Ex II 2G Ex h IIC Gb
CE Ex II 2D Ex h IIIC Db

: UL / CSA
Factory Mutual Approval

: International certification for explosive atmospheres

: CU - TR 012

: Nepsy approval - China

: Suitable up to SIL 3

Section 01

Air distribution

Valves, solenoid valves and devices for compressed air distribution and control

Valves and solenoid valves

Spool valves and solenoid valves

Single and manifold versions, mechanical and manual or pneumatic command

Series 104 1.1

Series 105 1.12

Series 200 1.21

Series T200 1.54

Series 800 1.68

Series 888 1.77

Series 400 1.90

Series T400 1.109

Series 2100
Line-Flat-Base 1.123

Series 2400
Line-Flat-VDMA 1.139

Series 2600
Line-Flat-VDMA 1.162

Direct operated solenoid valves

Pilot valves, high flow rate performance 2/2 ways and 3/2 ways, miniaturized version available as well

Series 300 1.178

Solenoid coils 1.193

Series M (Mechanical) 1.196

Series CNOMO 1.201

Series S 1.204

300-UL solenoid coils 1.206

UL solenoid coils 1.206

Le informazioni tecniche sono fornite solo a scopo informativo e possono essere soggette a modifiche senza preavviso

Poppet valves and solenoid valves

3/2 & 2/2 valves and solenoid valves for compressed air and vacuum, with aluminium and technopolymer body. 2/2 pad valves, shutter seating, angle seated solenoid valves for fluids

Series 700 1.208

Series N776 1.221

Series T772-773 1.226

Series T771 1.241

Series PVA 1.249

Series F300 1.253

Series PVF 1.282

“Namur” valves and solenoid valves

Namur valves and solenoid valves according to standard ISO 5599/1 available in 3 sizes with M12 5/2, 5/3 connectors, aluminium and technopolymer body

Series 514/N 1.283

Series T514 1.285

Series 514 1.290

Series 515 1.297

ISO 5599/1 valves and solenoid valves

Valves and solenoid valves according to standard ISO 5599/1 available in 3 sizes with M12 5/2, 5/3 connectors, aluminium and technopolymer body

Series 1000 1.303

Series 1000-M12 1.320

Accessories

Pneumatic circuit accessories

Flow control valves, quick exhaust valves, selectors, silencers, unidirectional valves, manifolds, blocking valves, economizers, gang mounting manifolds, spry valves

Series 600 1.327

Blocking valves

Unidirectional and bidirectional blocking valves, aluminium and technopolymer versions, with G1/8”- G1/4”- G3/8”- G1/2” connections

Series 50-T50 1.349

Complementary valves

Pressure switches, impulse generators, timers, two hands safety valve, oscillator valve, signal amplifier, progressive start up valve, high-low pressure device

Series 900 1.341

Function fittings

Miniaturized logic function with technopolymer body:
RFU, RP, VB, VSR, VS-or, VS-and, IP, AP, RP+IP, VB+RFU, VB+VSR

Series 55-TecnoFUN 1.354

Accessories (following)

Miniaturised pressure regulators

Brass versions rod G1/8" with technopolymer body and integrated gauge version

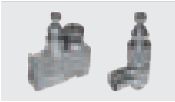
Series 1750 - 1760 1.369

Compact fittings for lubrication

Nichel plated brass compact fittings, with straight male adaptor

Series Mini-RAP 1.371

Valves and solenoid valve manifolds

Wide range of multipole & serial systems, available with main fieldbus protocols

Series 2700 - ISO15407-2 1.373

Series 2300 Enova 1.400

Series 2200 Optyma-S 1.421

Series 2200 Optyma-Sc 1.448

Series 2500 Optyma-F 1.455

Series 2500 Optyma-T 1.486

Series 3000 1.520

Overall dimensions and technical information are provided solely for informative purposes and may be modified without notice

Series 104

General

The micro valves 104 series are a cost effective solution with reduced overall dimensions, easy to install and manage.
Their main characteristic is the possibility to choose between the version with lateral or rear pneumatic connections realized with quick fitting for Ø4mm tube included.
The valves are available with 2 or 3 ways versions, normally closed or open, 5 ways and 5 ways 3 positions open centres and pressured centres.
The 5 ways version is made with two 3 ways valves placed side by side with common inlet.
The operators available for this valve are push button (different versions), selector (key, short and long lever), lever (lever roller or level undirectional) and pneumatic.
It is also possible to combine the 2 and 3 ways valves with electrical switches, normally closed or open.

Construction characteristics

Body and cover	Technopolymer
Operators	Plastic material for buttons and switches
Seals	NBR
Spacer	Technopolymer
Spools	Steel
Springs	Spring steel
Pistons	Aluminium (for pneumatic command version)

Use and maintenance

This valves have an average life of 15 million cycles depending on the application and air quality.
Filtered and lubricated air using specified lubricants will reduce the wear of the seals and ensures long and trouble free operation.
Please ensure that the valve is being used according with the manufacturers specification, such as air pressure and temperature.

ATTENTION: use hydraulic oil class H for lubrication such as MAGNA GC 32 (Castrol).

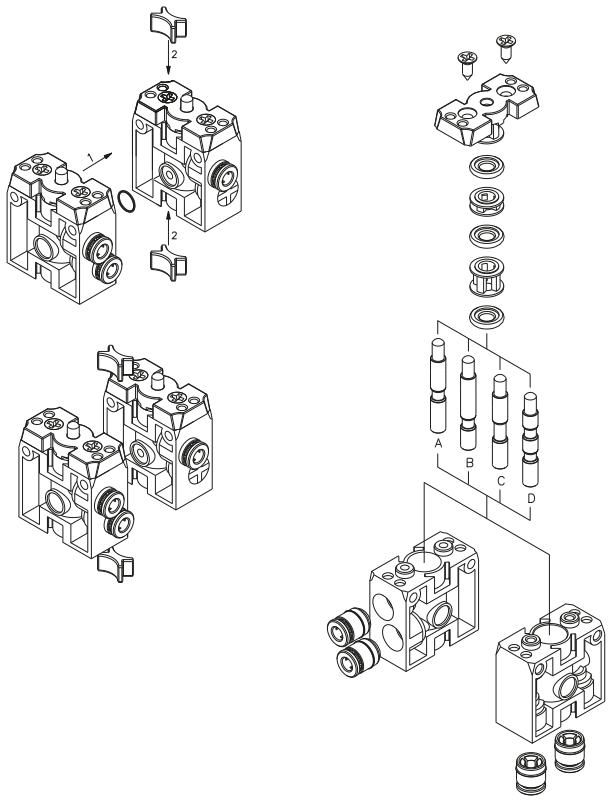

A : 2/2 N.C.
B : 2/2 N.A.
C : 3/2 N.C.
D : 3/2 N.A.

Tappet - Spring

Operational characteristics	
Fluid	Filtered air. No lubrication needed, if applied it shall be continuous
Max working pressure (bar)	10
Temperature °C	-5 ÷ +70
Flow rate at 6 bar with Δp=1 (Nl/min)	90
Orifice size (mm)	2.5
Working ports size	ø4 tube

Coding: 104.Ⓣ.0.1.Ⓦ.Ⓕ

Ⓣ	TYPE	Ⓕ	FUNCTION
	22 = 2 ways		**A** = Normally Open
	32 = 3 ways		**C** = Normally Closed
Ⓦ	CONNECTION TYPE		
	L = Lateral		
	P = Rear		

2/2 - 3/2 - Lateral connections

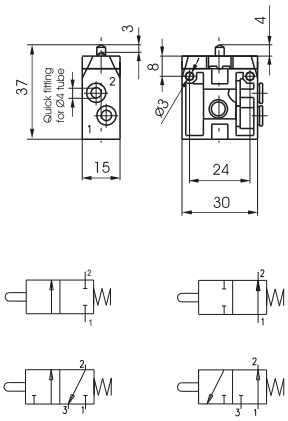

Weight 20 g
Operating force 13 N

104.Ⓣ.0.1.L.Ⓕ

2/2 - 3/2 - Rear connections

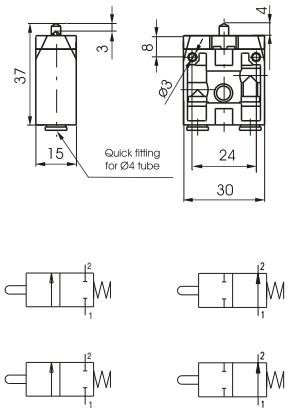

Weight 20 g
Operating force 13 N

104.Ⓣ.0.1.P.Ⓕ

Push button - Spring

Operational characteristics	
Fluid	Filtered air. No lubrication needed, if applied it shall be continuous
Max working pressure (bar)	10
Temperature °C	-5 ÷ +70
Flow rate at 6 bar with Δp=1 (Nl/min)	90
Orifice size (mm)	2.5
Working ports size	ø4 tube

Coding: 104.Ⓣ.6.22/Ⓒ.Ⓦ.Ⓕ

Ⓣ	TYPE	Ⓦ	CONNECTION TYPE
	22 = 2 ways		**L** = Lateral
	32 = 3 ways		**P** = Rear
	52 = 5 ways	Ⓕ	FUNCTION (only for 2 or 3 ways)
Ⓒ	BUTTON COLOR		**A** = Normally Open
	1 = Red		**C** = Normally Closed
	2 = Black		
	3 = Green		
	4 = Yellow		

2/2 - 3/2 - Lateral connections

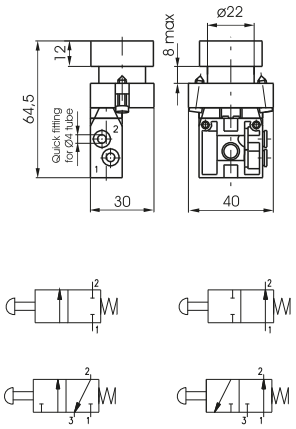

Weight 50 g
Operating force 18 N

104.Ⓣ.6.22/Ⓒ.L.Ⓕ

2/2 - 3/2 - Rear connections

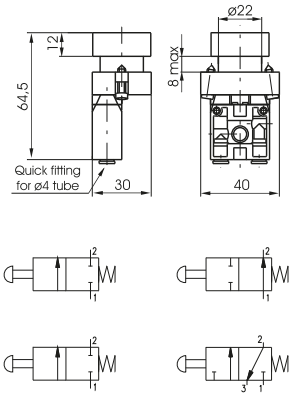

Weight 50 g
Operating force 18 N

104.Ⓣ.6.22/Ⓒ.P.Ⓕ

5/2 - Lateral connections

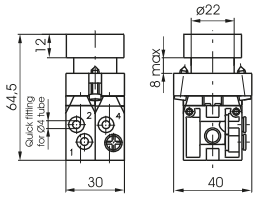

Weight 105 g
Operating force 30 N

104.52.6.22/Ⓒ.L

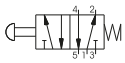

5/2 - Rear connections

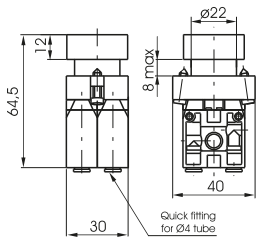

Weight 105 g
Operating force 30 N

104.52.6.22/Ⓒ.P

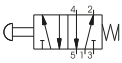

Overall dimensions and technical information are provided solely for informative purposes and may be modified without notice

Push button 2 positions (step - step)

Coding: 104.Ⓣ.6.31.Ⓦ.Ⓕ

Operational characteristics	
Fluid	Filtered air. No lubrication needed, if applied it shall be continuous
Max working pressure (bar)	10
Temperature °C	-5 ÷ +70
Flow rate at 6 bar with Δp=1 (Nl/min)	90
Orifice size (mm)	2.5
Working ports size	ø4 tube

Ⓣ	TYPE	Ⓕ	FUNCTION (only for 2/2 and 3/2 ways)
	22 = 2 ways		**A** = Normally Open
	32 = 3 ways		**C** = Normally Closed
	52 = 5 ways		
Ⓦ	CONNECTION TYPE		
	L = Lateral		
	P = Rear		

2/2 - 3/2 - Lateral connections

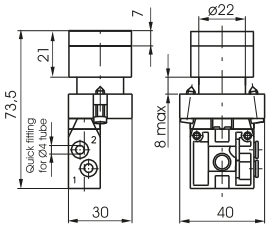

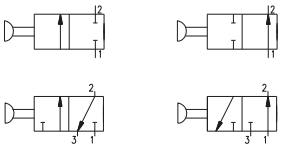

Weight 60 g
Operating force 18 N

104.Ⓣ.6.31.L.Ⓕ

2/2 - 3/2 - Rear connections

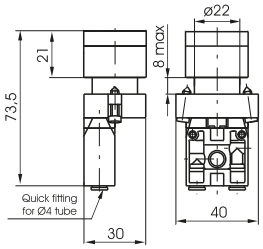

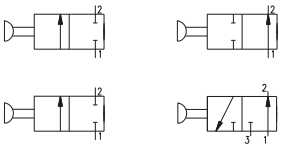

Weight 60 g
Operating force 18 N

104.Ⓣ.6.31.P.Ⓕ

5/2 - Lateral connections

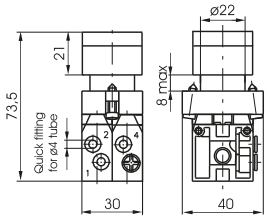

Weight 110 g
Operating force 30 N

104.52.6.31.L

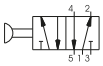

5/2 - Rear connections

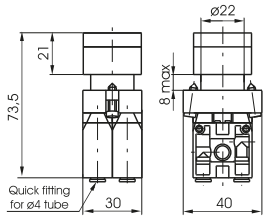

Weight 110 g
Operating force 30 N

104.52.6.31.P

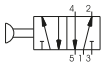

Raised Push button - Spring

Coding: 104.Ⓣ.6.23/Ⓒ.Ⓦ.Ⓕ

Operational characteristics	
Fluid	Filtered air. No lubrication needed, if applied it shall be continuous
Max working pressure (bar)	10
Temperature °C	-5 ÷ +70
Flow rate at 6 bar with Δp=1 (Nl/min)	90
Orifice size (mm)	2.5
Working ports size	ø4 tube

Ⓣ	TYPE	Ⓦ	CONNECTION TYPE
	22 = 2 ways		**L** = Lateral
	32 = 3 ways		**P** = Rear
	52 = 5 ways	Ⓕ	FUNCTION (only for 2 or 3 ways)
Ⓒ	BUTTON COLOR		**A** = Normally Open
	1 = Red		**C** = Normally Closed
	2 = Black		
	3 = Green		
	4 = Yellow		

2/2 - 3/2 - Lateral connections

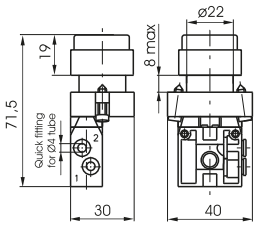

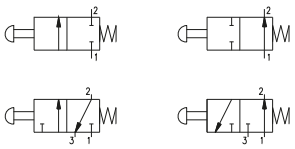

Weight 50 g
Operating force 18 N

104.Ⓣ.6.23/Ⓒ.L.Ⓕ

2/2 - 3/2 - Rear connections

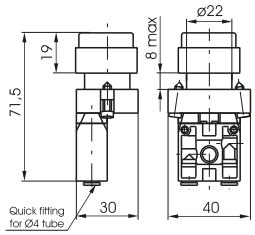

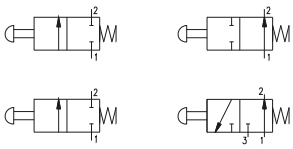

Weight 50 g
Operating force 18 N

104.Ⓣ.6.23/Ⓒ.P.Ⓕ

5/2 - Lateral connections

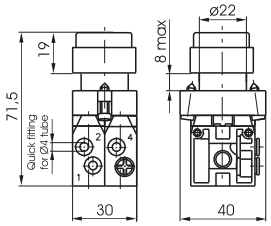

Weight 105 g
Operating force 30 N

104.52.6.23/Ⓒ.L

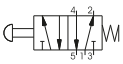

5/2 - Rear connections

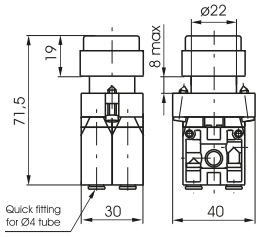

Weight 105 g
Operating force 30 N

104.52.6.23/Ⓒ.P

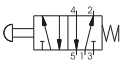

Overall dimensions and technical information are provided solely for informative purposes and may be modified without notice

Palm button 2 position

Coding: 104.Ⓣ.6.25.Ⓦ.Ⓕ

Operational characteristics	
Fluid	Filtered air. No lubrication needed, if applied it shall be continuous
Max working pressure (bar)	10
Temperature °C	-5 ÷ +70
Flow rate at 6 bar with Δp=1 (Nl/min)	90
Orifice size (mm)	2.5
Working ports size	ø4 tube

Ⓣ	TYPE	Ⓕ	FUNCTION (only for 2/2 and 3/2 ways)
	22 = 2 ways		**A** = Normally Open
	32 = 3 ways		**C** = Normally Closed
	52 = 5 ways		
Ⓦ	CONNECTION TYPE		
	L = Lateral		
	P = Rear		

2/2 - 3/2 - Lateral connections

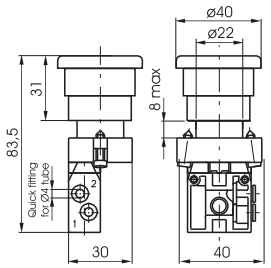

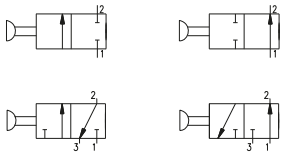

Weight 65 g
Operating force 19 N
Emergency - Rotate to unlock

104.Ⓣ.6.25.L.Ⓕ

2/2 - 3/2 - Rear connections

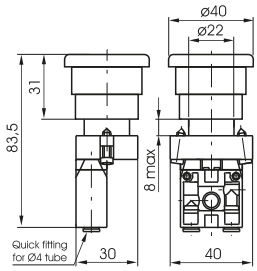

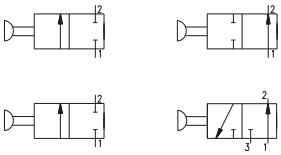

Weight 65 g
Operating force 19 N
Emergency - Rotate to unlock

104.Ⓣ.6.25.P.Ⓕ

5/2 - Lateral connections

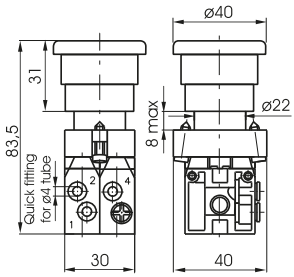

Weight 120 g
Operating force 32 N
Emergency - Rotate to unlock

104.52.6.25.L

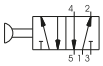

5/2 - Rear connections

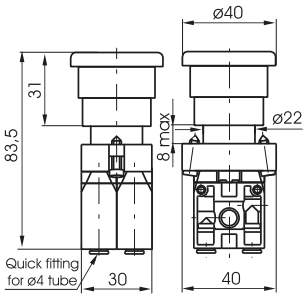

Weight 120 g
Operating force 32 N
Emergency - Rotate to unlock

104.52.6.25.P

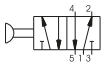

Switch - short lever

Coding: 104.Ⓣ.Ⓕ1.6.30.Ⓢ.Ⓦ.Ⓕ2

Operational characteristics	
Fluid	Filtered air. No lubrication needed, if applied it shall be continuous
Max working pressure (bar)	10
Temperature °C	-5 ÷ +70
Flow rate at 6 bar with Δp=1 (Nl/min)	90
Orifice size (mm)	2.5
Working ports size	ø4 tube

Ⓣ	TYPE	
	22 = 2 ways	
	32 = 3 ways	
	52 = 5 ways	
	53 = 5 ways	
Ⓕ1	FUNCTION (only for 5/3 ways)	
	32 = Open centres	
	33 = Pressured centres	
Ⓢ	SWITCH POSITION (only for 2/2 and 3/2 ways)	
	0 = 3 pos. instable	
	1 = 3 pos. stable	
Ⓦ	CONNECTION TYPE	
	L = Lateral	
	P = Rear	
Ⓕ2	FUNCTION (only for 2/2 or 3/2 ways)	
	A = Normally Open	
	C = Normally Closed	

1

AIR DISTRIBUTION

2/2 - 3/2 - Lateral connections

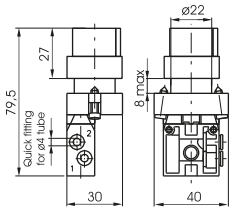

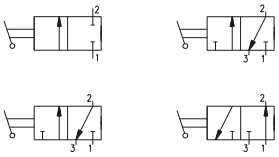

Weight 65 g
Switch 2 positions stable

104.Ⓣ.6.30.L.Ⓕ

2/2 - 3/2 - Rear connections

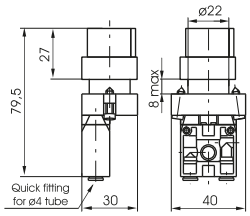

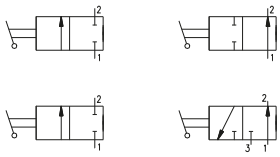

Weight 65 g
Switch 2 positions stable

104.Ⓣ.6.30.P.Ⓕ

5/2 - Lateral connections

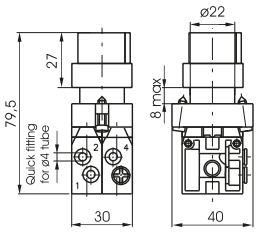

Weight 120 g
Switch 2 positions stable

104.52.6.30.L

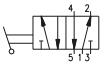

5/2 - Rear connections

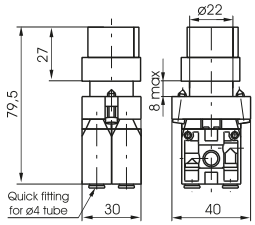

Weight 120 g
Switch 2 positions stable

104.52.6.30.P

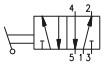

5/3 - Lateral connections

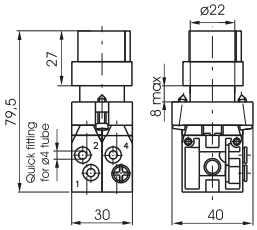

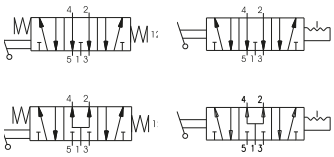

Weight 120 g

104.53.Ⓕ.6.30.Ⓢ.L

5/3 - Rear connections

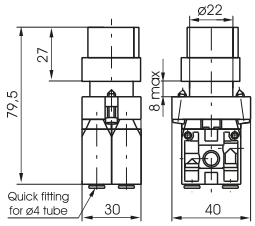

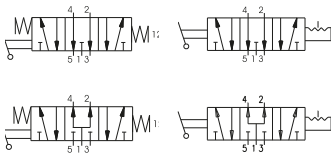

Weight 120 g

104.53.Ⓕ.6.30.Ⓢ.P

Overall dimensions and technical information are provided solely for informative purposes and may be modified without notice

Switch - long lever

Coding: 104.Ⓣ.Ⓕ1.6.27.Ⓢ.Ⓦ.Ⓕ2

Operational characteristics	
Fluid	Filtered air. No lubrication needed, if applied it shall be continuous
Max working pressure (bar)	10
Temperature °C	-5 ÷ +70
Flow rate at 6 bar with Δp=1 (Nl/min)	90
Orifice size (mm)	2.5
Working ports size	ø4 tube

Ⓣ	TYPE	Ⓢ	SWITCH POSITION (only for 2/2 and 3/2 ways)
	22 = 2 ways		**0** = 3 pos. instable
	32 = 3 ways		**1** = 3 pos. stable
	52 = 5 ways	Ⓦ	CONNECTION TYPE
	53 = 5 ways		**L** = Lateral
Ⓕ1	FUNCTION (only for 5/3 ways)		**P** = Rear
	32 = Open centres	Ⓕ2	FUNCTION (only for 2/2 or 3/2 ways)
	33 = Pressured centres		**A** = Normally Open
			C = Normally Closed

1

AIR DISTRIBUTION

2/2 - 3/2 - Lateral connections

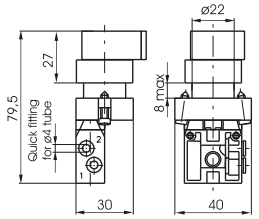

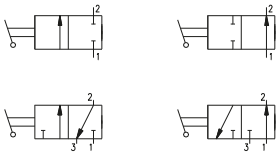

Weight 65 g
Switch 2 positions stable

104.Ⓣ.6.27.L.Ⓕ

2/2 - 3/2 - Rear connections

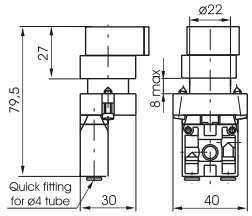

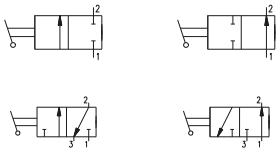

Weight 65 g
Switch 2 positions stable

104.Ⓣ.6.27.P.Ⓕ

5/2 - Lateral connections

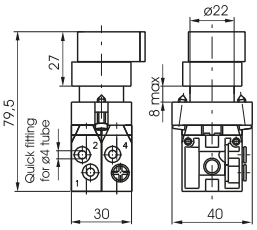

Weight 120 g
Switch 2 positions stable

104.52.6.27.L

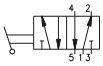

5/2 - Rear connections

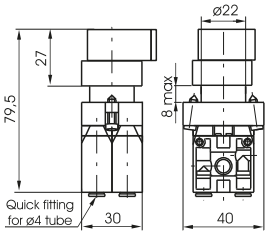

Weight 120 g
Switch 2 positions stable

104.52.6.27.P

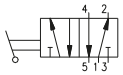

5/3 - Lateral connections

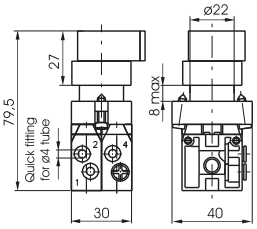

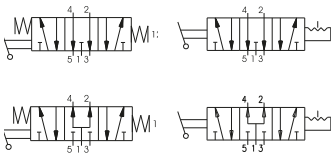

Weight 120 g

104.53.Ⓕ.6.27.Ⓢ.L

5/3 - Rear connections

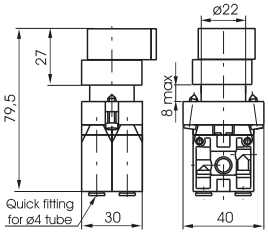

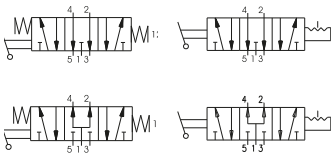

Weight 120 g

104.53.Ⓕ.6.27.Ⓢ.P

Key switch

Operational characteristics	
Fluid	Filtered air. No lubrication needed, if applied it shall be continuous
Max working pressure (bar)	10
Temperature °C	-5 ÷ +70
Flow rate at 6 bar with Δp=1 (Nl/min)	90
Orifice size (mm)	2.5
Working ports size	ø4 tube

Coding: 104.Ⓣ.Ⓕ1.6.28.Ⓢ.Ⓦ.Ⓕ2

Ⓣ	TYPE	Ⓢ	SWITCH POSITION (only for 2/2 and 3/2 ways)
	22 = 2 ways		**0** = 3 pos. instable
	32 = 3 ways		**1** = 3 pos. stable
	52 = 5 ways	Ⓦ	CONNECTION TYPE
	53 = 5 ways		**L** = Lateral
Ⓕ1	FUNCTION 1 (only for 5/3 ways)		**P** = Rear
	32 = Open centres	Ⓕ2	FUNCTION 2 (only for 2/2 or 3/2 ways)
	33 = Pressured centres		**A** = Normally Open
			C = Normally Closed

2/2 - 3/2 - Lateral connections

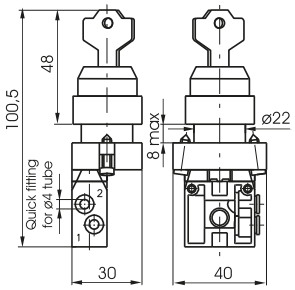

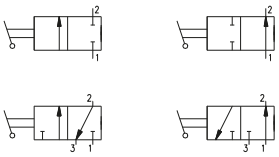

Weight 100 g
Switch 2 positions stable

104.Ⓣ.6.28.L.Ⓕ

2/2 - 3/2 - Rear connections

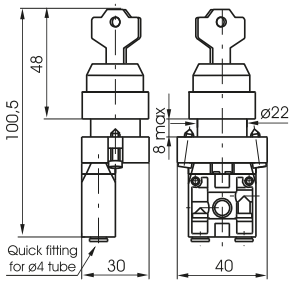

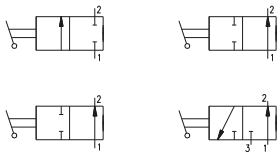

Weight 100 g
Switch 2 positions stable

104.Ⓣ.6.28.P.Ⓕ

5/2 - Lateral connections

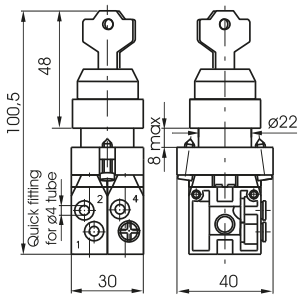

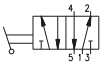

Weight 155 g
Switch 2 positions stable

104.52.6.28.L

5/2 - Rear connections

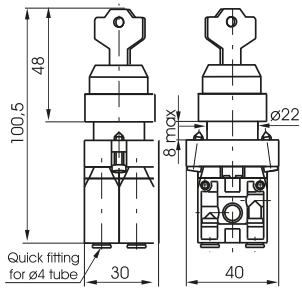

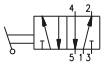

Weight 155 g
Switch 2 positions stable

104.52.6.28.P

5/3 - Lateral connections

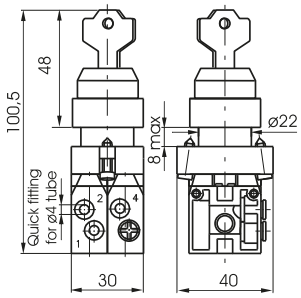

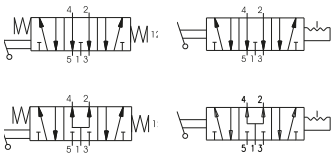

Weight 155 g

104.53.Ⓕ.6.28.Ⓢ.L

5/3 - Rear connections

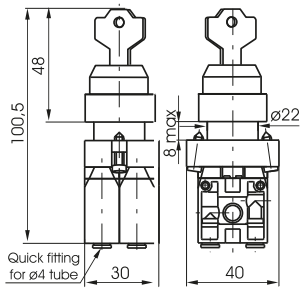

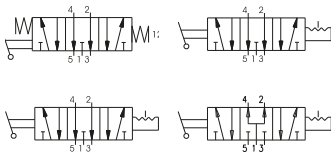

Weight 155 g

104.53.Ⓕ.6.28.Ⓢ.P

Overall dimensions and technical information are provided solely for informative purposes and may be modified without notice

Lever roller - Spring

Coding: 104.Ⓣ.2.1.Ⓦ.Ⓕ

Operational characteristics	
Fluid	Filtered air. No lubrication needed, if applied it shall be continuous
Max working pressure (bar)	10
Temperature °C	-5 ÷ +70
Flow rate at 6 bar with Δp=1 (Nl/min)	90
Orifice size (mm)	2.5
Working ports size	ø4 tube

Ⓣ	TYPE	Ⓕ	FUNCTION
	22 = 2 ways		**A** = Normally Open
	32 = 3 ways		**C** = Normally Closed
Ⓦ	CONNECTION TYPE		
	L = Lateral		
	P = Rear		

2/2 - 3/2 - Lateral connections

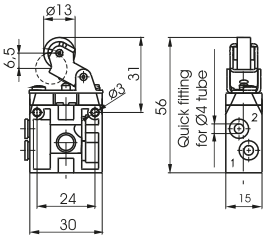

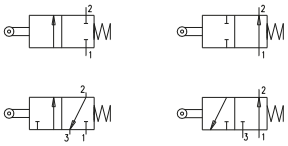

Weight 31 g
Operating force 9 N

104.Ⓣ.2.1.L.Ⓕ

2/2 - 3/2 - Rear connections

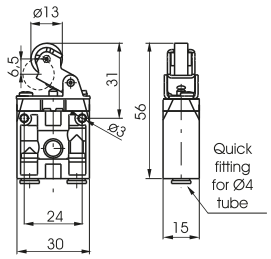

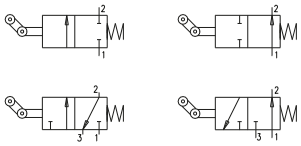

Weight 31 g
Operating force 9 N

104.Ⓣ.2.1.P.Ⓕ

Lever roller ball bearing - Spring

Coding: 104.Ⓣ.2.1/1.Ⓦ.Ⓕ

Operational characteristics	
Fluid	Filtered air. No lubrication needed, if applied it shall be continuous
Max working pressure (bar)	10
Temperature °C	-5 ÷ +70
Flow rate at 6 bar with Δp=1 (Nl/min)	90
Orifice size (mm)	2.5
Working ports size	ø4 tube

Ⓣ	TYPE	Ⓕ	FUNCTION
	22 = 2 ways		**A** = Normally Open
	32 = 3 ways		**C** = Normally Closed
Ⓦ	CONNECTION TYPE		
	L = Lateral		
	P = Rear		

2/2 - 3/2 - Lateral connections

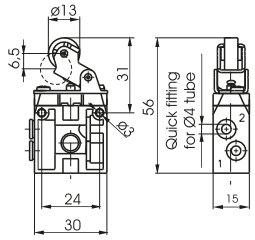

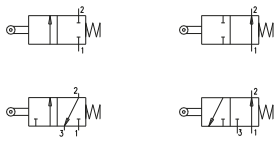

Weight 46 g
Operating force 9 N

104.Ⓣ.2.1/1.L.Ⓕ

2/2 - 3/2 - Rear connections

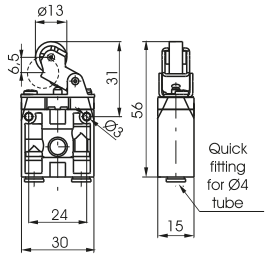

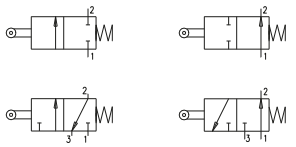

Weight 46 g
Operating force 9 N

104.Ⓣ.2.1/1.P.Ⓕ

Lever unidirectional - Spring

Coding: 104.Ⓣ.3.1.Ⓦ.Ⓕ

Operational characteristics	
Fluid	Filtered air. No lubrication needed, if applied it shall be continuous
Max working pressure (bar)	10
Temperature °C	-5 ÷ +70
Flow rate at 6 bar with Δp=1 (Nl/min)	90
Orifice size (mm)	2.5
Working ports size	ø4 tube

Ⓣ	TYPE	Ⓕ	FUNCTION
	22 = 2 ways		**A** = Normally Open
	32 = 3 ways		**C** = Normally Closed
Ⓦ	CONNECTION TYPE		
	L = Lateral		
	P = Rear		

2/2 - 3/2 - Lateral connections

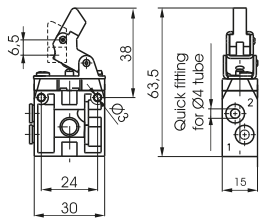

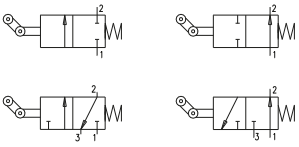

Weight 31 g
Operating force 9 N

104.Ⓣ.3.1.L.Ⓕ

2/2 - 3/2 - Rear connections

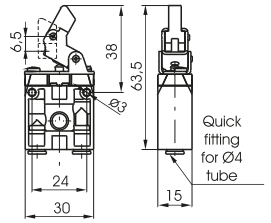

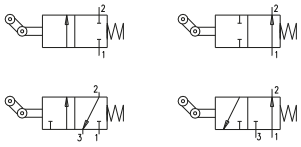

Weight 31 g
Operating force 9 N

104.Ⓣ.3.1.P.Ⓕ

Complete lever roller operator

Coding: 104.2.1

Complete lever roller ball bearing operator

Coding: 104.2.1/1

Complete lever unidirectional

Coding: 104.3.1

Fixing plate

Coding: 104.00

Push button

Coding: 104.6.22/Ⓒ

Ⓒ	BUTTON COLOR
	1 = Red
	2 = Black
	3 = Green
	4 = Yellow

Raised Push button

Coding: 104.6.23/Ⓒ

Ⓒ	BUTTON COLOR
	1 = Red
	2 = Black
	3 = Green
	4 = Yellow

Push button 2 positions

Coding: 104.6.31

(step - step)

Palm button 2 position

Coding: 104.6.25

Emergency - Rotate to unlock

Switch - short lever

Coding: 104.6.30.Ⓢ

Ⓢ	SWITCH POSITION (only for 3 position)
	0 = 3 pos. instable
	1 = 3 pos. stable

Switch 2 positions stable
104.6.30

Switch 3 positions
104.6.30.Ⓢ

Switch - long lever

Coding: 104.6.27.Ⓢ

Ⓢ	SWITCH POSITION (only for 3 position)
	0 = 3 pos. instable
	1 = 3 pos. stable

Switch 2 positions stable
104.6.27

Switch 3 positions
104.6.27.Ⓢ

Key switch

Coding: 104.6.28.Ⓢ

Ⓢ	SWITCH POSITION (only for 3 position)
	0 = 3 pos. instable
	1 = 3 pos. stable

Switch 2 positions stable
104.6.28

Switch 3 positions
104.6.28.Ⓢ

Joystick selector switch

Coding: 104.6.39.Ⓢ

Contact electric element

Coding: 104.Ⓕ

Ⓕ	FUNCTION	
	NO =	Normally Open
	NC =	Normally Closed

Complete Pneumatic Operator

Coding: 104.11

Push button protection cover

Coding: 104.02

Overall dimensions and technical information are provided solely for informative purposes and may be modified without notice

Pneumatic - Spring

Coding: 104.Ⓣ.11.1.Ⓦ.Ⓕ

Operational characteristics	
Fluid	Filtered air. No lubrication needed, if applied it shall be continuous
Max working pressure (bar)	10
Temperature °C	-5 ÷ +50
Flow rate at 6 bar with Δp=1 (Nl/min)	90
Orifice size (mm)	2.5
Working ports size	ø4 tube
Pilot ports size	M5

Ⓣ	TYPE	Ⓕ	FUNCTION
	22 = 2 ways		**A** = Normally Open
	32 = 3 ways		**C** = Normally Closed
Ⓦ	CONNECTION TYPE		
	L = Lateral		
	P = Rear		

2/2 - 3/2 - Lateral connections

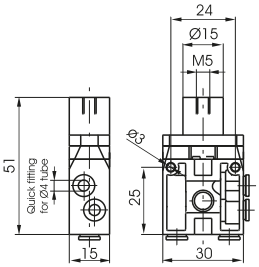

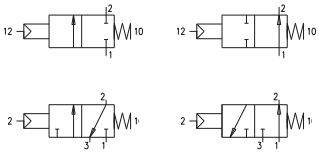

Weight 25 g
Minimum piloting pressure 2,5 bar

104.22.11.1.L.Ⓕ

2/2 - 3/2 - Rear connections

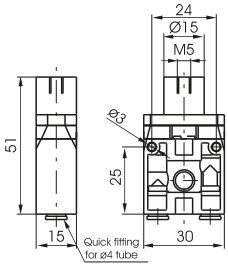

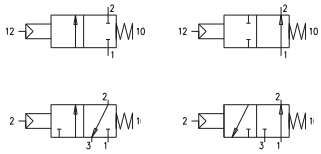

Weight 25 g
Minimum piloting pressure 2,5 bar

104.32.11.1.P.Ⓕ

Series 105

General

The series 105 consist of a broad range of miniature valves and valves with various type of actuation.
The connections are M5 for this series
Due to their special construction with a balanced spool, these valves can be used interchangeably as 3 ways or 5 ways.
The 3 ways can be used normally closed or normally open and the 5 ways can be fed through the exhausts 3 and 5 with different pressures according to the need.
The spool, as it is moving, isolates the connections without being affected by the inlet pressure.

Construction characteristics

	M5
Body	Aluminium
Operators	Nickel plated brass Stainless steel for roller levers and button levers; Zinc plated steel for side levers; Plastic material for handles, buttons and switches Aluminium (for pneumatic command version)
Seals	NBR
Spacer	Technopolymer
Spools	Steel
Springs	Spring steel
Pistons	Aluminium (for pneumatic command version)

Use and maintenance

This valves have an average life of 15 million cycles depending on the application and air quality.
Filtered and lubricated air using specified lubricants will reduce the wear of the seals and ensures long and trouble free operation.
Please ensure that the valve is being used according with the manufacturers specification, such as air pressure and temperature.
The exhaust port of the distributor has to be protected in a dusty and dirty environment.
Repair kits including the spool complete with seals are available for overhauling the valves.
However, although this is a simple operation it should be carried out by a competent person.

ATTENTION: use hydraulic oil class H for lubrication such as MAGNA GC 32 (Castrol).

Overall dimensions and technical information are provided solely for informative purposes and may be modified without notice

Tappet panel - Spring

Coding: 105.Ⓣ.0.1

Operational characteristics	
Fluid	Filtered air. No lubrication needed, if applied it shall be continuous
Max working pressure (bar)	10
Temperature °C	-5 ÷ +70
Flow rate at 6 bar with Δp=1 (Nl/min)	120
Orifice size (mm)	2.5
Working ports size	M5

	TYPE
Ⓣ	**32** = 3 ways
	52 = 5 ways

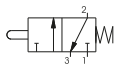
105.32.0.1

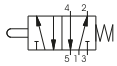
105.52.0.1

3 ways

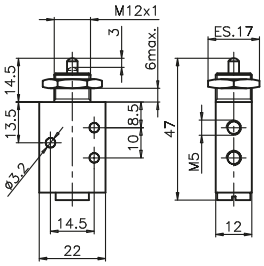

Weight 70 g
Operating force 14 N

5 ways

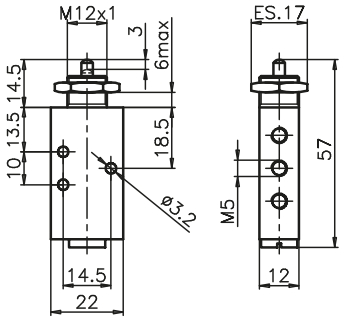

Weight 87 g
Operating force 14 N

Lever roller - Spring

Coding: 105.Ⓣ.2.1

Operational characteristics	
Fluid	Filtered air. No lubrication needed, if applied it shall be continuous
Max working pressure (bar)	10
Temperature °C	-5 ÷ +70
Flow rate at 6 bar with Δp=1 (Nl/min)	120
Orifice size (mm)	2.5
Working ports size	M5

	TYPE
Ⓣ	**32** = 3 ways
	52 = 5 ways

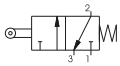
105.32.2.1

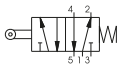
105.52.2.1

3 ways

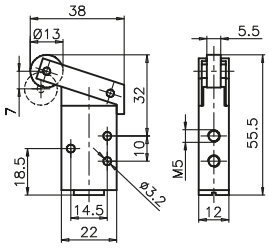

Weight 85 g
Operating force 6 N

5 ways

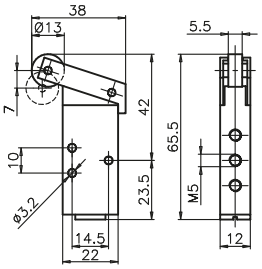

Weight 102 g
Operating force 6 N

Lever roller ball bearing - Spring

Coding: 105.Ⓣ.2.1/1

Operational characteristics	
Fluid	Filtered air. No lubrication needed, if applied it shall be continuous
Max working pressure (bar)	10
Temperature °C	-5 ÷ +70
Flow rate at 6 bar with Δp=1 (Nl/min)	120
Orifice size (mm)	2.5
Working ports size	M5

	TYPE
Ⓣ	**32** = 3 ways
	52 = 5 ways

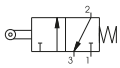
105.32.2.1/1

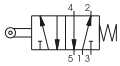
105.52.2.1/1

3 ways

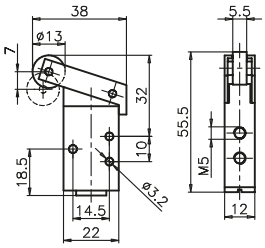

Weight 100 g
Operating force 6 N

5 ways

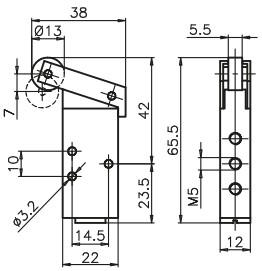

Weight 177 g
Operating force 6 N

Lever button - Spring

Coding: 105.Ⓣ.2.6/Ⓒ

Operational characteristics	
Fluid	Filtered air. No lubrication needed, if applied it shall be continuous
Max working pressure (bar)	10
Temperature °C	-5 ÷ +70
Flow rate at 6 bar with Δp=1 (Nl/min)	120
Orifice size (mm)	2.5
Working ports size	M5

Ⓣ	TYPE
	32 = 3 ways
	52 = 5 ways
Ⓒ	BUTTON COLOR
	1 = Red
	2 = Black
	3 = Green

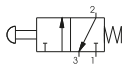
105.32.2.6/Ⓒ

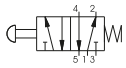
105.52.2.6/Ⓒ

3 ways

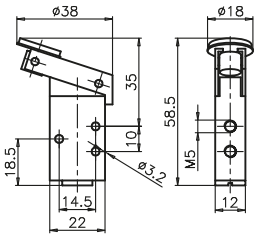

Weight 85 g
Operating force 6 N

5 ways

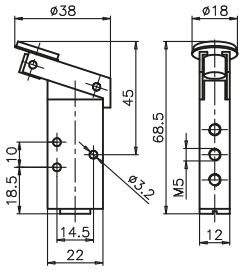

Weight 102 g
Operating force 6 N

Lever unidirectional - Spring

Coding: 105.Ⓣ.3.1

Operational characteristics	
Fluid	Filtered air. No lubrication needed, if applied it shall be continuous
Max working pressure (bar)	10
Temperature °C	-5 ÷ +70
Flow rate at 6 bar with Δp=1 (Nl/min)	120
Orifice size (mm)	2.5
Working ports size	M5

Ⓣ	TYPE
	32 = 3 ways
	52 = 5 ways

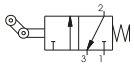
105.32.3.1

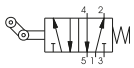
105.52.3.1

3 ways

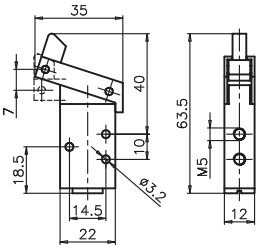

Weight 85 g
Operating force 6 N

5 ways

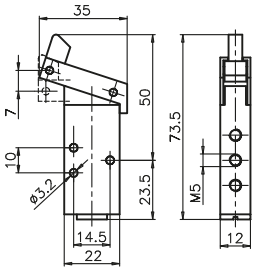

Weight 102 g
Operating force 6 N

Lever panel Ø22 - 2 positions

Coding: 105.Ⓣ.4/Ⓒ

Operational characteristics	
Fluid	Filtered air. No lubrication needed, if applied it shall be continuous
Max working pressure (bar)	10
Temperature °C	-5 ÷ +70
Flow rate at 6 bar with Δp=1 (Nl/min)	120
Orifice size (mm)	2.5
Working ports size	M5

Ⓣ	TYPE
	32 = 3 ways
	52 = 5 ways
Ⓒ	LEVER COLOR
	1 = Red
	2 = Black
	3 = Green

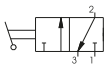
105.32.4/Ⓒ

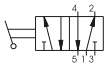
105.52.4/Ⓒ

3 ways

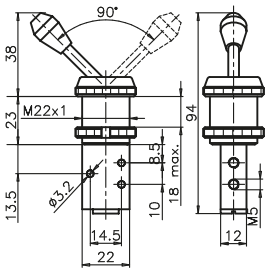

Weight 125 g

5 ways

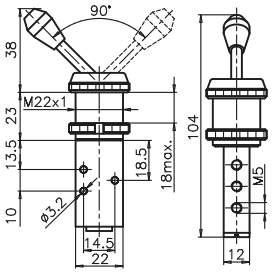

Weight 142 g

Overall dimensions and technical information are provided solely for informative purposes and may be modified without notice

Lever panel Ø30 - 2 positions

Coding: 105.Ⓣ.5/Ⓒ

Operational characteristics	
Fluid	Filtered air. No lubrication needed, if applied it shall be continuous
Max working pressure (bar)	10
Temperature °C	-5 ÷ +70
Flow rate at 6 bar with Δp=1 (Nl/min)	120
Orifice size (mm)	2.5
Working ports size	M5

Ⓣ	TYPE
	32 = 3 ways
	52 = 5 ways
Ⓒ	LEVER COLOR
	1 = Red
	2 = Black
	3 = Green

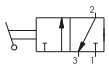
105.32.5/Ⓒ

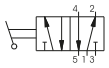
105.52.5/Ⓒ

3 ways

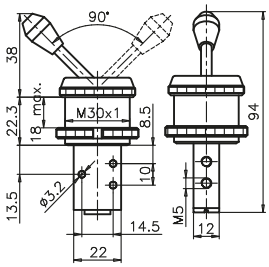

Weight 165 g

5 ways

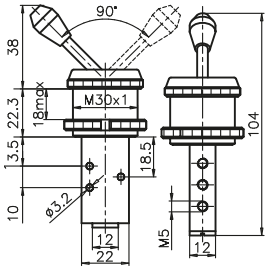

Weight 182 g

Push button Ø30 - Spring

Coding: 105.Ⓣ.6.1/Ⓒ

Operational characteristics	
Fluid	Filtered air. No lubrication needed, if applied it shall be continuous
Max working pressure (bar)	10
Temperature °C	-5 ÷ +70
Flow rate at 6 bar with Δp=1 (Nl/min)	120
Orifice size (mm)	2.5
Working ports size	M5

Ⓣ	TYPE
	32 = 3 ways
	52 = 5 ways
Ⓒ	BUTTON COLOR
	1 = Red
	2 = Black
	3 = Green

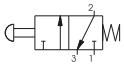
105.32.6.1/Ⓒ

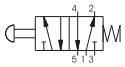
105.52.6.1/Ⓒ

3 ways

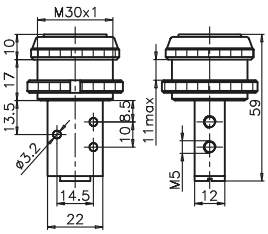

Weight 123 g
Operating force 14 N

5 ways

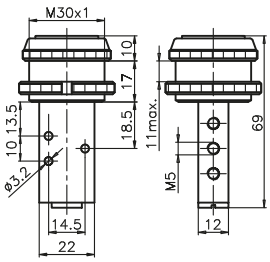

Weight 140 g
Operating force 14 N

Push button Ø22 - Spring

Coding: 105.Ⓣ.6.2/Ⓒ

Operational characteristics	
Fluid	Filtered air. No lubrication needed, if applied it shall be continuous
Max working pressure (bar)	10
Temperature °C	-5 ÷ +70
Flow rate at 6 bar with Δp=1 (Nl/min)	120
Orifice size (mm)	2.5
Working ports size	M5

Ⓣ	TYPE
	32 = 3 ways
	52 = 5 ways
Ⓒ	BUTTON COLOR
	1 = Red
	2 = Black
	3 = Green

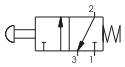
105.32.6.2/Ⓒ

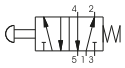
105.52.6.2/Ⓒ

3 ways

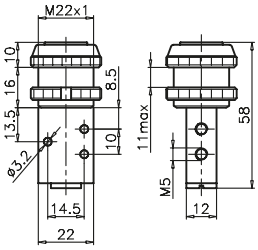

Weight 102 g
Operating force 14 N

5 ways

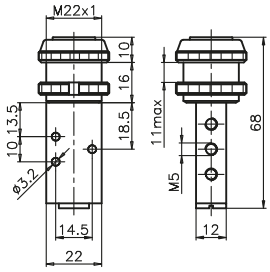

Weight 119 g
Operating force 14 N

Push button - Spring

Coding: 105.Ⓣ.6.22/Ⓒ

Operational characteristics	
Fluid	Filtered air. No lubrication needed, if applied it shall be continuous
Max working pressure (bar)	10
Temperature °C	-5 ÷ +70
Flow rate at 6 bar with Δp=1 (Nl/min)	120
Orifice size (mm)	2.5
Working ports size	M5

Ⓣ	TYPE
	32 = 3 ways
	52 = 5 ways
Ⓒ	BUTTON COLOR
	1 = Red
	2 = Black
	3 = Green
	4 = Yellow

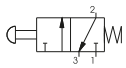
105.32.6.22/Ⓒ

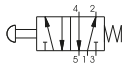
105.52.6.22/Ⓒ

3 ways

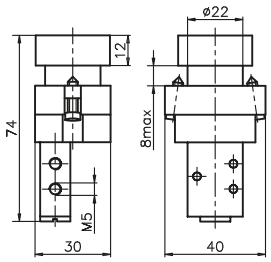

Weight 165 g
Operating force 14 N

5 ways

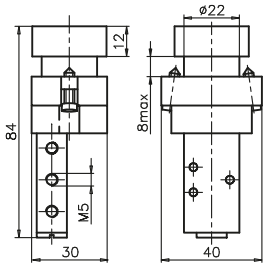

Weight 182 g
Operating force 14 N

Raised Push button - Spring

Coding: 105.Ⓣ.6.23/Ⓒ

Operational characteristics	
Fluid	Filtered air. No lubrication needed, if applied it shall be continuous
Max working pressure (bar)	10
Temperature °C	-5 ÷ +70
Flow rate at 6 bar with Δp=1 (Nl/min)	120
Orifice size (mm)	2.5
Working ports size	M5

Ⓣ	TYPE
	32 = 3 ways
	52 = 5 ways
Ⓒ	BUTTON COLOR
	1 = Red
	2 = Black
	3 = Green
	4 = Yellow

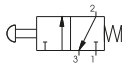
105.32.6.23/Ⓒ

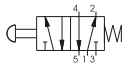
105.52.6.23/Ⓒ

3 ways

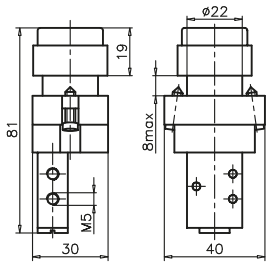

Weight 170 g
Operating force 14 N

5 ways

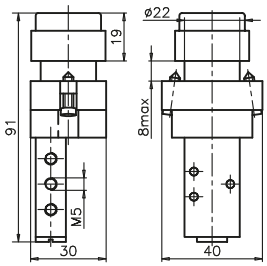

Weight 187 g
Operating force 14 N

Switch 2 positions

Coding: 105.Ⓣ.6.27

Operational characteristics	
Fluid	Filtered air. No lubrication needed, if applied it shall be continuous
Max working pressure (bar)	10
Temperature °C	-5 ÷ +70
Flow rate at 6 bar with Δp=1 (Nl/min)	120
Orifice size (mm)	2.5
Working ports size	M5

Ⓣ	TYPE
	32 = 3 ways
	52 = 5 ways

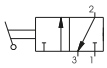
105.32.6.27

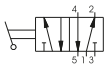
105.52.6.27

3 ways

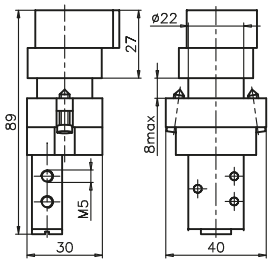

Weight 185 g

5 ways

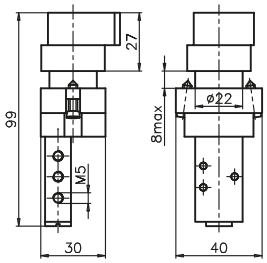

Weight 202 g

Overall dimensions and technical information are provided solely for informative purposes and may be modified without notice

Key switch 2 positions

Coding: 105.Ⓣ.6.28

Operational characteristics	
Fluid	Filtered air. No lubrication needed, if applied it shall be continuous
Max working pressure (bar)	10
Temperature °C	-5 ÷ +70
Flow rate at 6 bar with Δp=1 (Nl/min)	120
Orifice size (mm)	2.5
Working ports size	M5

Ⓣ	TYPE
	32 = 3 ways
	52 = 5 ways

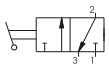
105.32.6.28

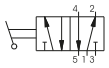
105.52.6.28

3 ways

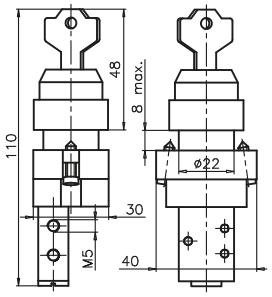

Weight 215 g

5 ways

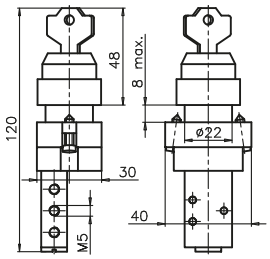

Weight 232 g

Palm pushbutton Ø30 - Spring

Coding: 105.Ⓣ.7.1/Ⓒ

Operational characteristics	
Fluid	Filtered air. No lubrication needed, if applied it shall be continuous
Max working pressure (bar)	10
Temperature °C	-5 ÷ +70
Flow rate at 6 bar with Δp=1 (Nl/min)	120
Orifice size (mm)	2.5
Working ports size	M5

Ⓣ	TYPE
	32 = 3 ways
	52 = 5 ways
Ⓒ	BUTTON COLOR
	1 = Red
	2 = Black
	3 = Green

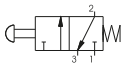
105.32.7.1/Ⓒ

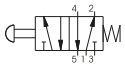
105.52.7.1/Ⓒ

3 ways

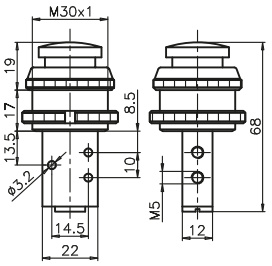

Weight 126 g
Operating force 14 N

5 ways

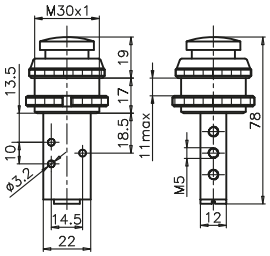

Weight 143 g
Operating force 14 N

Palm pushbutton Ø22 - Spring

Coding: 105.Ⓣ.7.2/Ⓒ

Operational characteristics	
Fluid	Filtered air. No lubrication needed, if applied it shall be continuous
Max working pressure (bar)	10
Temperature °C	-5 ÷ +70
Flow rate at 6 bar with Δp=1 (Nl/min)	120
Orifice size (mm)	2.5
Working ports size	M5

Ⓣ	TYPE
	32 = 3 ways
	52 = 5 ways
Ⓒ	BUTTON COLOR
	1 = Red
	2 = Black
	3 = Green

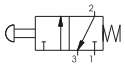
105.32.7.2/Ⓒ

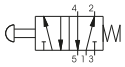
105.52.7.2/Ⓒ

3 ways

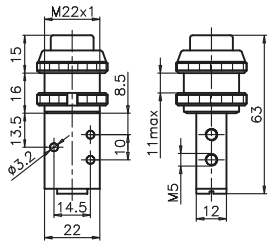

Weight 103 g
Operating force 14 N

5 ways

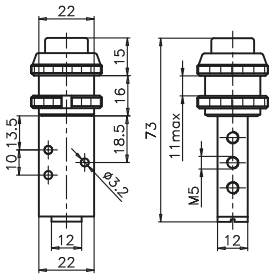

Weight 120 g
Operating force 14 N

Push button

Coding: 105.Ⓣ.8.1/Ⓒ

Operational characteristics	
Fluid	Filtered air. No lubrication needed, if applied it shall be continuous
Max working pressure (bar)	10
Temperature °C	-5 ÷ +70
Flow rate at 6 bar with Δp=1 (Nl/min)	120
Orifice size (mm)	2.5
Working ports size	M5

Ⓣ	TYPE
	32 = 3 ways
	52 = 5 ways
Ⓒ	BUTTON COLOR
	1 = Red
	2 = Black
	3 = Green

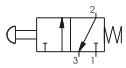
105.32.8.1/Ⓒ

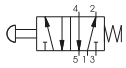
105.52.8.1/Ⓒ

3 ways

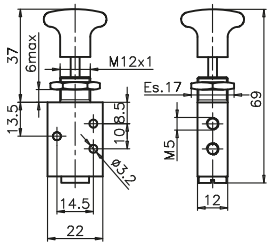

Weight 75 g
Operating force 14 N

5 ways

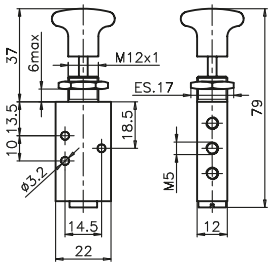

Weight 92 g
Operating force 14 N

Push button 2 positions

Coding: 105.Ⓣ.8/Ⓒ

Operational characteristics	
Fluid	Filtered air. No lubrication needed, if applied it shall be continuous
Max working pressure (bar)	10
Temperature °C	-5 ÷ +70
Flow rate at 6 bar with Δp=1 (Nl/min)	120
Orifice size (mm)	2.5
Working ports size	M5

Ⓣ	TYPE
	32 = 3 ways
	52 = 5 ways
Ⓒ	BUTTON COLOR
	1 = Red
	2 = Black
	3 = Green

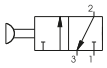
105.32.8/Ⓒ

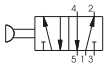
105.52.8/Ⓒ

3 ways

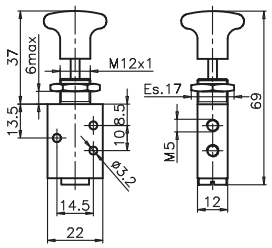

Weight 75 g
Operating force 14 N

5 ways

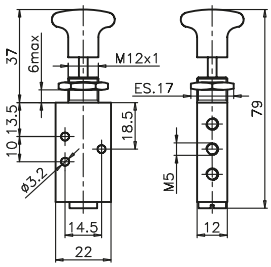

Weight 92 g
Operating force 14 N

Whisker - Spring

Coding: 105.Ⓣ.9.1

Operational characteristics	
Fluid	Filtered air. No lubrication needed, if applied it shall be continuous
Max working pressure (bar)	10
Temperature °C	-5 ÷ +70
Flow rate at 6 bar with Δp=1 (Nl/min)	120
Orifice size (mm)	2.5
Working ports size	M5

Ⓣ	TYPE
	32 = 3 ways
	52 = 5 ways

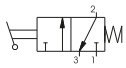
105.32.9.1

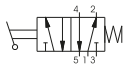
105.52.9.1

3 ways

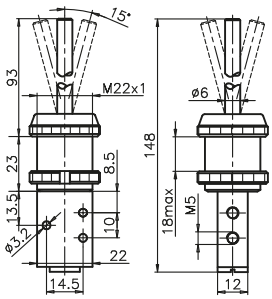

Weight 136 g

5 ways

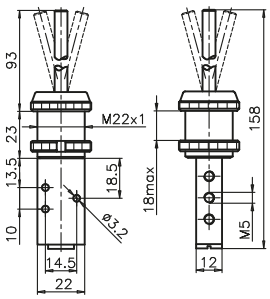

Weight 153 g

Overall dimensions and technical information are provided solely for informative purposes and may be modified without notice

Handle with valve

Coding: 105.Ⓣ.6.Ⓐ.Ⓕ

Operational characteristics	
Fluid	Filtered air. No lubrication needed, if applied it shall be continuous
Max working pressure (bar)	10
Temperature °C	-5 ÷ +70
Flow rate at 6 bar with Δp=1 (Nl/min)	120
Orifice size (mm)	2.5
Working ports size	M5 - Quick Fitting for Ø4 tube

Ⓣ	TYPE	Ⓕ	FUNCTION (only for 3 ways)
	32 = 3 ways		**A** = Normally Open
	52 = 5 ways		**C** = Normally Closed
Ⓐ	FEEDING		
	40 = Left feeding		
	40D = Right feeding		

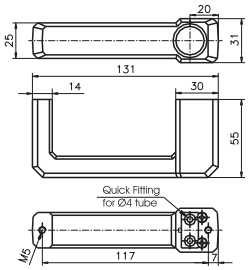

Weight 165 g
Operating force 14 N

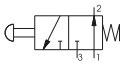

105.32.6.40.Ⓕ

Left feeding

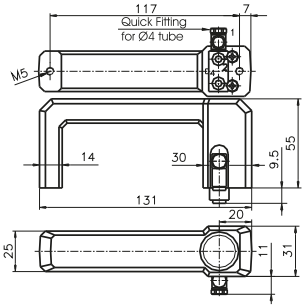

Weight 190 g
Operating force 14 N

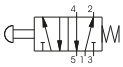

105.52.6.40

Right feeding

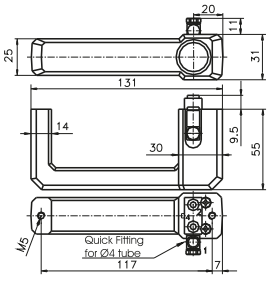

Weight 190 g
Operating force 14 N

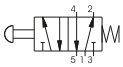

105.52.6.40.Ⓓ

Pneumatic - Spring

Coding: 105.Ⓣ.11.1

Operational characteristics	
Fluid	Filtered air. No lubrication needed, if applied it shall be continuous
Max working pressure (bar)	10
Temperature °C	-5 ÷ +70
Flow rate at 6 bar with Δp=1 (Nl/min)	120
Orifice size (mm)	2.5
Working ports size	M5
Pilot ports size	M5

Ⓣ	TYPE
	32 = 3 ways
	52 = 5 ways

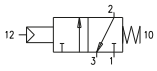

105.32.11.1

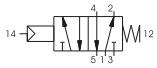

105.52.11.1

3 ways

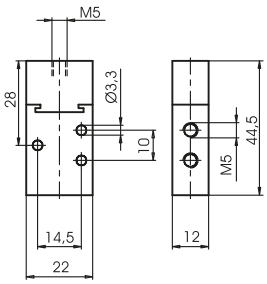

Weight 90 g
Minimum piloting pressure 2,5 bar

5 ways

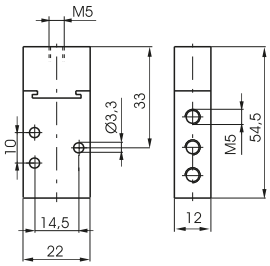

Weight 100 g
Minimum piloting pressure 2,5 bar

Pneumatic - Differential external

Coding: 105.Ⓣ.11.12

Operational characteristics	
Fluid	Filtered air. No lubrication needed, if applied it shall be continuous
Max working pressure (bar)	10
Temperature °C	-5 ÷ +70
Flow rate at 6 bar with Δp=1 (Nl/min)	120
Orifice size (mm)	2.5
Working ports size	M5
Pilot ports size	M5

Ⓣ	TYPE
	32 = 3 ways
	52 = 5 ways

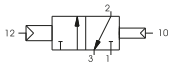

105.32.11.12

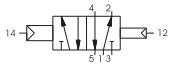

105.52.11.12

3 ways

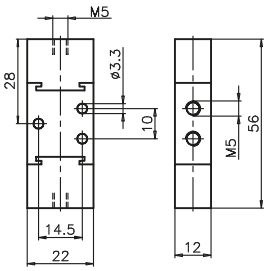

Weight 110 g
Minimum piloting pressure 2,5 bar

5 ways

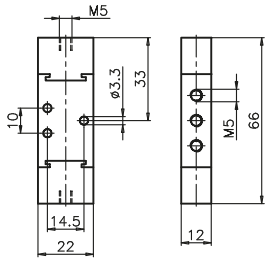

Weight 120 g
Minimum piloting pressure 2,5 bar

Pneumatic - Pneumatic

Coding: 105.Ⓣ.11.11

Operational characteristics	
Fluid	Filtered air. No lubrication needed, if applied it shall be continuous
Max working pressure (bar)	10
Temperature °C	-5 ÷ +70
Flow rate at 6 bar with Δp=1 (Nl/min)	120
Orifice size (mm)	2.5
Working ports size	M5
Pilot ports size	M5

Ⓣ	TYPE
	32 = 3 ways
	52 = 5 ways

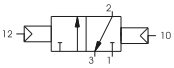

105.32.11.11

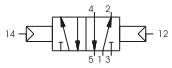

105.52.11.11

3 ways

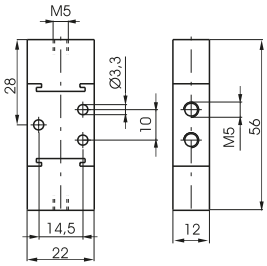

Weight 110 g
Minimum piloting pressure 2,5 bar

5 ways

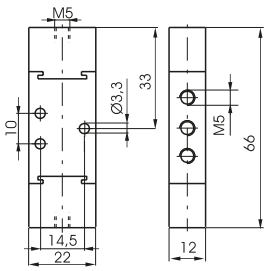

Weight 120 g
Minimum piloting pressure 2,5 bar

Overall dimensions and technical information are provided solely for informative purposes and may be modified without notice

Series 200

General

The series 200 consist of a broad range of valves with various type of actuation.
The connections for this series are from G 1/8" to G 1".
Due to their special construction with a balanced spool, these valves can be used interchangeably as 3 ways or 5 ways.
The 3 ways can be used normally closed or normally open and the 5 ways can be fed through the exhausts 3 and 5 with different pressures according to the need.
The spool, as it is moving, isolates the connections without being affected by the inlet pressure.

Construction characteristics

	G 1/8" - G 1/4" - G 1/2" - G 1"
Body	Aluminium
Operators	Aluminium Technopolymer
Seals	NBR PUR for 212/2
Spacer	Technopolymer Aluminium for G1" (211)
Spools	Steel Aluminium, for 212/2
Springs	Spring steel
Pistons	Technopolymer, for 228 pneumatic command valves Aluminium, for 224, 212, 212/2 e 211 pneumatic command valves

Use and maintenance

This valves have an average life of 15 million cycles depending on the application and air quality.
Filtered and lubricated air using specified lubricants will reduce the wear of the seals and ensures long and trouble free operation.
Please ensure that the valve is being used according with the manufacturers specification, such as air pressure and temperature.
The exhaust port of the distributor has to be protected in a dusty and dirty environment.
Repair kits including the spool complete with seals are available for overhauling the valves.
However, although this is a simple operation it should be carried out by a competent person.

ATTENTION: use hydraulic oil class H for lubrication such as MAGNA GC 32 (Castrol).

Tappet - Spring

Coding: 228.Ⓣ.0.1

Operational characteristics	
Fluid	Filtered air. No lubrication needed, if applied it shall be continuous
Max working pressure (bar)	10
Temperature °C	-5 ÷ +70
Flow rate at 6 bar with Δp=1 (Nl/min)	540
Orifice size (mm)	6
Working ports size	G1/8"

	TYPE
Ⓣ	**32** = 3 ways
	52 = 5 ways

3 ways

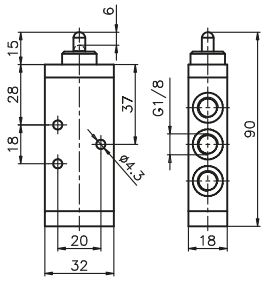

Weight 85 g
Operating force 33 N

228.32.0.1

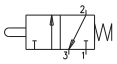

5 ways

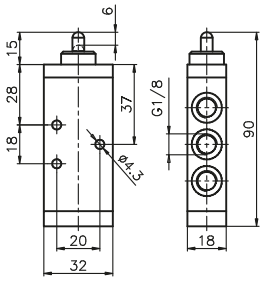

Weight 105 g
Operating force 33 N

228.52.0.1

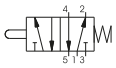

Tappet panel - Spring

Coding: 228.Ⓣ.1.1

Operational characteristics	
Fluid	Filtered air. No lubrication needed, if applied it shall be continuous
Max working pressure (bar)	10
Temperature °C	-5 ÷ +70
Flow rate at 6 bar with Δp=1 (Nl/min)	540
Orifice size (mm)	6
Working ports size	G1/8"

	TYPE
Ⓣ	**32** = 3 ways
	52 = 5 ways

3 ways

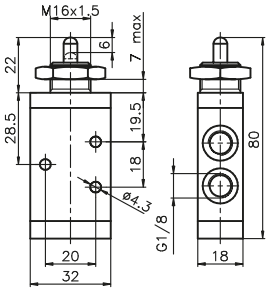

Weight 102 g
Operating force 33 N

228.32.1.1

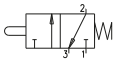

5 ways

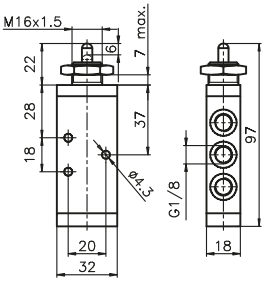

Weight 122 g
Operating force 33 N

228.52.1.1

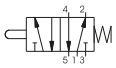

Lever roller - Spring

Coding: 228.Ⓣ.2.Ⓥ

Operational characteristics	
Fluid	Filtered air. No lubrication needed, if applied it shall be continuous
Max working pressure (bar)	10
Temperature °C	-5 ÷ +70
Flow rate at 6 bar with Δp=1 (Nl/min)	540
Orifice size (mm)	6
Working ports size	G1/8"

	TYPE
Ⓣ	**32** = 3 ways
	52 = 5 ways
	VERSION
Ⓥ	**1** = Plastic roller
	1/2 = Metal roller

3 ways

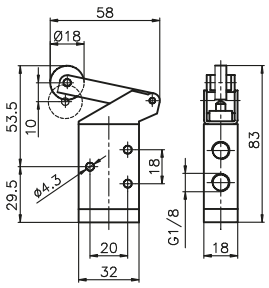

Weight 115 g
Operating force 15 N

228.32.2.Ⓥ

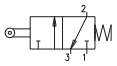

5 ways

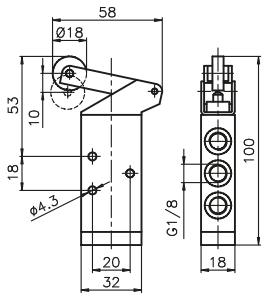

Weight 135 g
Operating force 15 N

228.52.2.Ⓥ

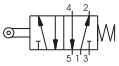

Overall dimensions and technical information are provided solely for informative purposes and may be modified without notice

Lever roller ball bearing - Spring

Coding: 228.Ⓣ.2.1/1

Operational characteristics	
Fluid	Filtered air. No lubrication needed, if applied it shall be continuous
Max working pressure (bar)	10
Temperature °C	-5 ÷ +70
Flow rate at 6 bar with Δp=1 (Nl/min)	540
Orifice size (mm)	6
Working ports size	G1/8"

Ⓣ	TYPE
	32 = 3 ways
	52 = 5 ways

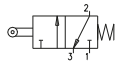

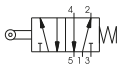

3 ways

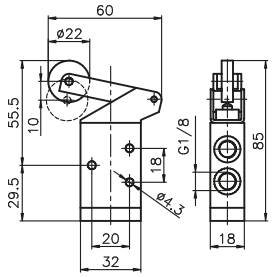

Weight 130 g
Operating force 15 N

228.32.2.1/1

5 ways

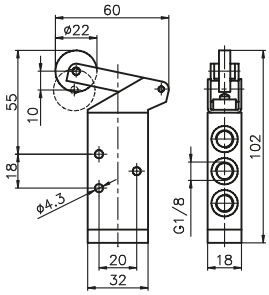

Weight 150 g
Operating force 15 N

228.52.2.1/1

Lever button - Spring

Coding: 228.Ⓣ.2.6/Ⓒ

Operational characteristics	
Fluid	Filtered air. No lubrication needed, if applied it shall be continuous
Max working pressure (bar)	10
Temperature °C	-5 ÷ +70
Flow rate at 6 bar with Δp=1 (Nl/min)	540
Orifice size (mm)	6
Working ports size	G1/8"

Ⓣ	TYPE
	32 = 3 ways
	52 = 5 ways
Ⓒ	BUTTON COLOR
	1 = Red
	2 = Black
	3 = Green

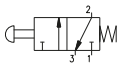

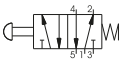

3 ways

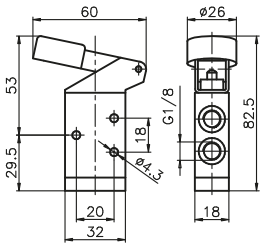

Weight 120 g
Operating force 15 N

228.32.2.6/Ⓒ

5 ways

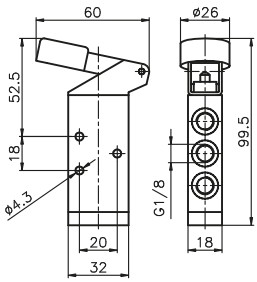

Weight 120 g
Operating force 15 N

228.52.2.6/Ⓒ

Switch lateral 2 positions

Coding: 228.Ⓣ.27

Operational characteristics	
Fluid	Filtered air. No lubrication needed, if applied it shall be continuous
Max working pressure (bar)	10
Temperature °C	-5 ÷ +70
Flow rate at 6 bar with Δp=1 (Nl/min)	540
Orifice size (mm)	6
Working ports size	G1/8"

Ⓣ	TYPE
	32 = 3 ways
	52 = 5 ways

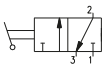

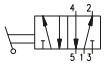

3 ways

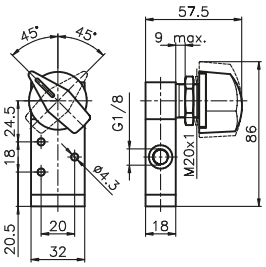

Weight 190 g

228.32.27

5 ways

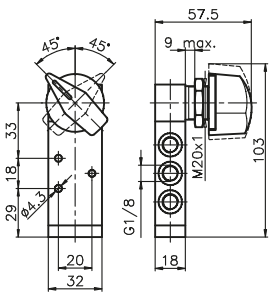

Weight 210 g

228.52.27

Lever roller unidirectional - Spring

Coding: 228.Ⓣ.3.Ⓥ

Operational characteristics	
Fluid	Filtered air. No lubrication needed, if applied it shall be continuous
Max working pressure (bar)	10
Temperature °C	-5 ÷ +70
Flow rate at 6 bar with Δp=1 (Nl/min)	540
Orifice size (mm)	6
Working ports size	G1/8"

Ⓣ	TYPE
	32 = 3 ways
	52 = 5 ways
Ⓥ	VERSION
	1 = Plastic roller
	1/2 = Metal roller

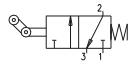

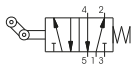

3 ways

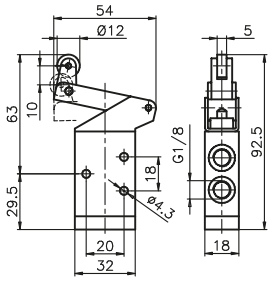

Weight 110 g

228.32.3.Ⓥ

5 ways

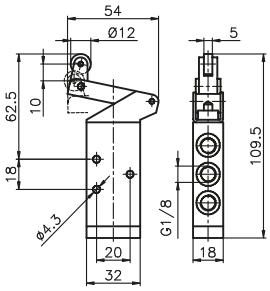

Weight 130 g

228.52.3.Ⓥ

Lever roller lateral bidirectional - Spring

Coding: 228.Ⓣ.4.1

Operational characteristics	
Fluid	Filtered air. No lubrication needed, if applied it shall be continuous
Max working pressure (bar)	10
Temperature °C	-5 ÷ +70
Flow rate at 6 bar with Δp=1 (Nl/min)	540
Orifice size (mm)	6
Working ports size	G1/8"

Ⓣ	TYPE
	32 = 3 ways
	52 = 5 ways

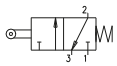

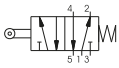

3 ways

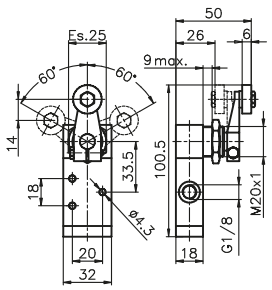

Weight 180 g

228.32.4.1

5 ways

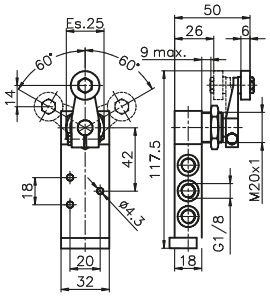

Weight 200 g

228.52.4.1

Lever sensitive - differential

Coding: 228.Ⓣ.4.13

Operational characteristics	
Fluid	Filtered air. No lubrication needed, if applied it shall be continuous
Max working pressure (bar)	10
Temperature °C	-5 ÷ +70
Flow rate at 6 bar with Δp=1 (Nl/min)	540
Orifice size (mm)	6
Working ports size	G1/8"

Ⓣ	TYPE
	32 = 3 ways
	52 = 5 ways

Minimum rotation angle 11°

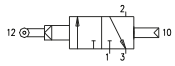

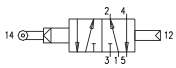

3 ways

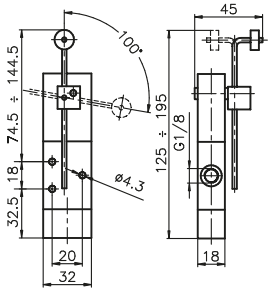

Weight 200 g
Minimum rotation angle 11°
Minimum working pressure 2,5 bar

228.32.4.13

5 ways

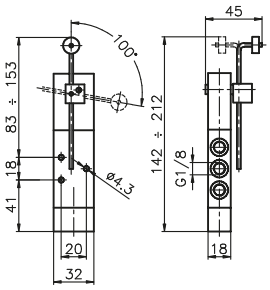

Weight 220 g
Minimum rotation angle 11°
Minimum working pressure 2,5 bar

228.52.4.13

Overall dimensions and technical information are provided solely for informative purposes and may be modified without notice

Lever panel Ø30 - 2 positions

Coding: 228.Ⓣ.5/Ⓒ

Operational characteristics	
Fluid	Filtered air. No lubrication needed, if applied it shall be continuous
Max working pressure (bar)	10
Temperature °C	-5 ÷ +70
Flow rate at 6 bar with Δp=1 (Nl/min)	540
Orifice size (mm)	6
Working ports size	G1/8"

Ⓣ	TYPE
	32 = 3 ways
	52 = 5 ways
Ⓒ	LEVER COLOR
	1 = Red
	2 = Black
	3 = Green

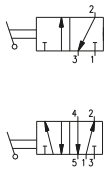

3 ways

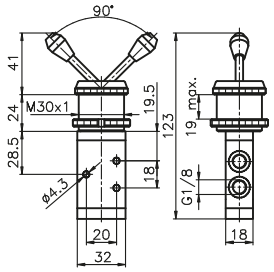

Weight 198 g

228.32.5/Ⓒ

5 ways

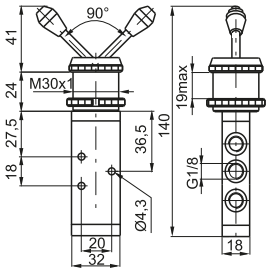

Weight 218 g

228.52.5/Ⓒ

Frontal lever - 2 positions

Coding: 228.Ⓣ.55/Ⓒ

Operational characteristics	
Fluid	Filtered air. No lubrication needed, if applied it shall be continuous
Max working pressure (bar)	10
Temperature °C	-5 ÷ +70
Flow rate at 6 bar with Δp=1 (Nl/min)	540
Orifice size (mm)	6
Working ports size	G1/8"

Ⓣ	TYPE
	32 = 3 ways
	52 = 5 ways
Ⓒ	LEVER COLOR
	1 = Red
	2 = Black
	3 = Green

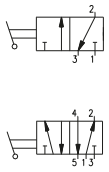

3 ways

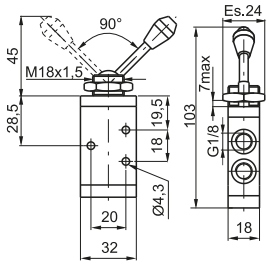

Weight 115 g

228.32.55/Ⓒ

5 ways

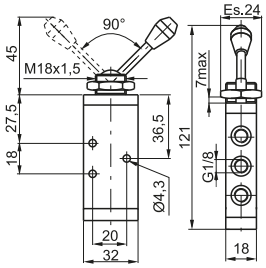

Weight 135 g

228.52.55/Ⓒ

Push button Ø 30 - spring

Coding: 228.Ⓣ.6.1/Ⓒ

Operational characteristics	
Fluid	Filtered air. No lubrication needed, if applied it shall be continuous
Max working pressure (bar)	10
Temperature °C	-5 ÷ +70
Flow rate at 6 bar with Δp=1 (Nl/min)	540
Orifice size (mm)	6
Working ports size	G1/8"

Ⓣ	TYPE
	32 = 3 ways
	52 = 5 ways
Ⓒ	BUTTON COLOR
	1 = Red
	2 = Black
	3 = Green

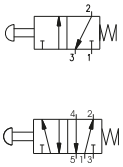

3 ways

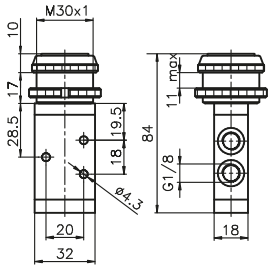

Weight 155 g
Operating force 33 N

228.32.6.1/Ⓒ

5 ways

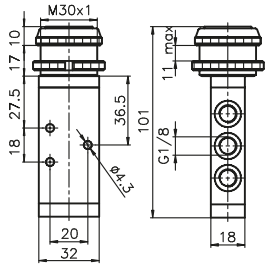

Weight 175 g
Operating force 33 N

228.52.6.1/Ⓒ

Sensitive push button Ø30 - differential

Coding: 228.Ⓣ.6.13/Ⓒ

Operational characteristics	
Fluid	Filtered air. No lubrication needed, if applied it shall be continuous
Max working pressure (bar)	10
Temperature °C	-5 ÷ +70
Flow rate at 6 bar with Δp=1 (Nl/min)	540
Orifice size (mm)	6
Working ports size	G1/8"

Ⓣ	TYPE
	32 = 3 ways
	52 = 5 ways
Ⓒ	BUTTON COLOR
	1 = Red
	2 = Black
	3 = Green

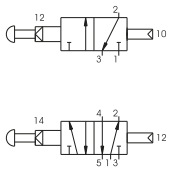

3 ways

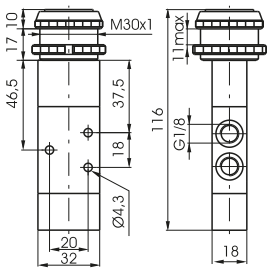

Weight 197 g
Operating force 18,5 N (at 6 bar)

228.32.6.13/Ⓒ

5 ways

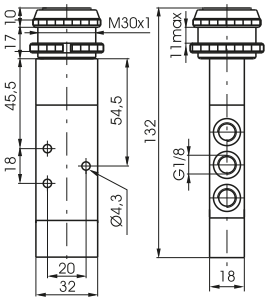

Weight 217 g
Operating force 18,5 N (at 6 bar)

228.52.6.13/Ⓒ

Push button - Spring

Coding: 228.Ⓣ.6.22/Ⓒ

Operational characteristics	
Fluid	Filtered air. No lubrication needed, if applied it shall be continuous
Max working pressure (bar)	10
Temperature °C	-5 ÷ +70
Flow rate at 6 bar with Δp=1 (Nl/min)	540
Orifice size (mm)	6
Working ports size	G1/8"

Ⓣ	TYPE
	32 = 3 ways
	52 = 5 ways
Ⓒ	BUTTON COLOR
	1 = Red
	2 = Black
	3 = Green
	4 = Yellow

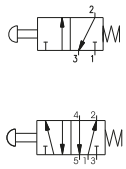

3 ways

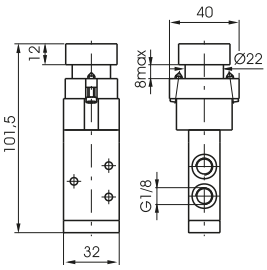

Weight 225 g
Operating force 33 N

228.32.6.22/Ⓒ

5 ways

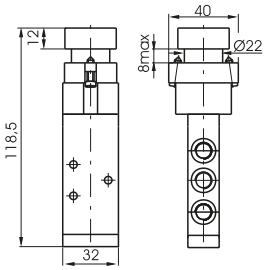

Weight 245 g
Operating force 33 N

228.52.6.22/Ⓒ

Raised push button Ø22 - Spring

Coding: 228.Ⓣ.6.23/Ⓒ

Operational characteristics	
Fluid	Filtered air. No lubrication needed, if applied it shall be continuous
Max working pressure (bar)	10
Temperature °C	-5 ÷ +70
Flow rate at 6 bar with Δp=1 (Nl/min)	540
Orifice size (mm)	6
Working ports size	G1/8"

Ⓣ	TYPE
	32 = 3 ways
	52 = 5 ways
Ⓒ	BUTTON COLOR
	1 = Red
	2 = Black
	3 = Green
	4 = Yellow

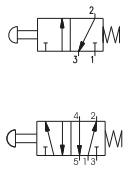

3 ways

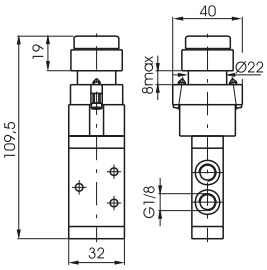

Weight 230 g
Operating force 33 N

228.32.6.23/Ⓒ

5 ways

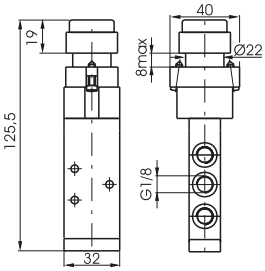

Weight 250 g
Operating force 33 N

228.52.6.23/Ⓒ

Overall dimensions and technical information are provided solely for informative purposes and may be modified without notice

Push button Ø22 - 2 positions

Coding: 228.Ⓣ.6.25

Operational characteristics	
Fluid	Filtered air. No lubrication needed, if applied it shall be continuous
Max working pressure (bar)	10
Temperature °C	-5 ÷ +70
Flow rate at 6 bar with Δp=1 (Nl/min)	540
Orifice size (mm)	6
Working ports size	G1/8"

Ⓣ	TYPE
	32 = 3 ways
	52 = 5 ways

Emergency - Rotate to unlock

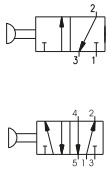

3 ways

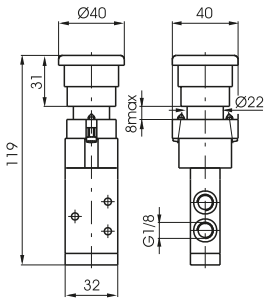

Weight 235 g
Operating force 33 N

228.32.6.25

5 ways

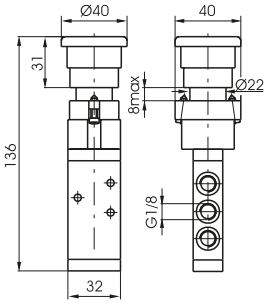

Weight 235 g
Operating force 33 N

228.52.6.25

Switch 2 positions

Coding: 228.Ⓣ.6.27

Operational characteristics	
Fluid	Filtered air. No lubrication needed, if applied it shall be continuous
Max working pressure (bar)	10
Temperature °C	-5 ÷ +70
Flow rate at 6 bar with Δp=1 (Nl/min)	540
Orifice size (mm)	6
Working ports size	G1/8"

Ⓣ	TYPE
	32 = 3 ways
	52 = 5 ways

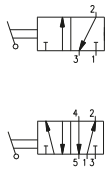

3 ways

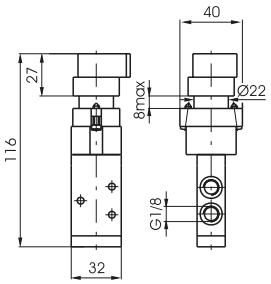

Weight 230 g

228.32.6.27

5 ways

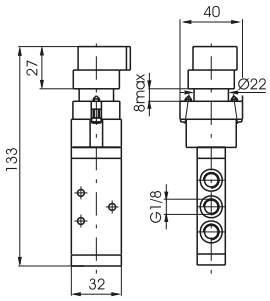

Weight 250 g

228.52.6.27

Key switch 2 positions

Coding: 228.Ⓣ.6.28

Operational characteristics	
Fluid	Filtered air. No lubrication needed, if applied it shall be continuous
Max working pressure (bar)	10
Temperature °C	-5 ÷ +70
Flow rate at 6 bar with Δp=1 (Nl/min)	540
Orifice size (mm)	6
Working ports size	G1/8"

Ⓣ	TYPE
	32 = 3 ways
	52 = 5 ways

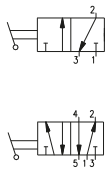

3 ways

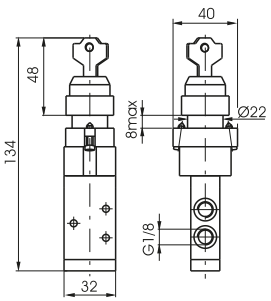

Weight 230 g

228.32.6.28

5 ways

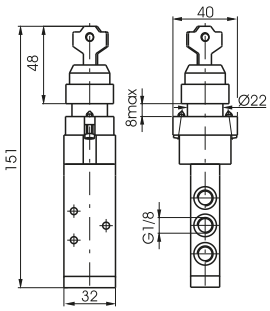

Weight 250 g

228.52.6.28

Palm push button Ø30 2 positions

Coding: 228.Ⓣ.7.1/Ⓒ

Operational characteristics	
Fluid	Filtered air. No lubrication needed, if applied it shall be continuous
Max working pressure (bar)	10
Temperature °C	-5 ÷ +70
Flow rate at 6 bar with Δp=1 (Nl/min)	540
Orifice size (mm)	6
Working ports size	G1/8"

Ⓣ	TYPE
	32 = 3 ways
	52 = 5 ways
Ⓒ	BUTTON COLOR
	1 = Red
	2 = Black
	3 = Green

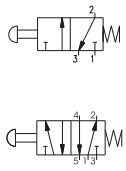

3 ways

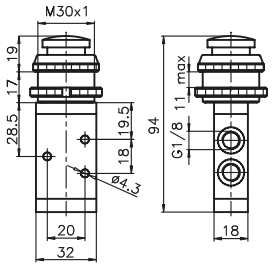

Weight 148 g

228.32.7.1/Ⓒ

5 ways

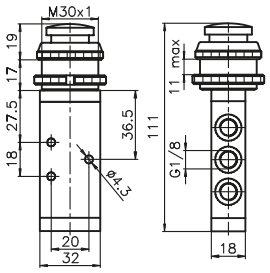

Weight 168 g

228.52.7.1/Ⓒ

Push button - Spring

Coding: 228.Ⓣ.8.1/Ⓒ

Operational characteristics	
Fluid	Filtered air. No lubrication needed, if applied it shall be continuous
Max working pressure (bar)	10
Temperature °C	-5 ÷ +70
Flow rate at 6 bar with Δp=1 (Nl/min)	540
Orifice size (mm)	6
Working ports size	G1/8"

Ⓣ	TYPE
	32 = 3 ways
	52 = 5 ways
Ⓒ	BUTTON COLOR
	1 = Red
	2 = Black
	3 = Green

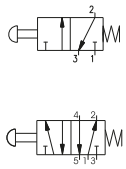

3 ways

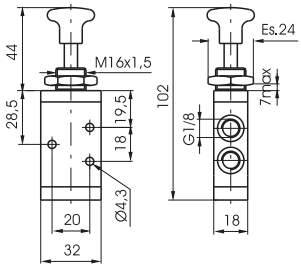

Weight 120 g

228.32.8.1/Ⓒ

5 ways

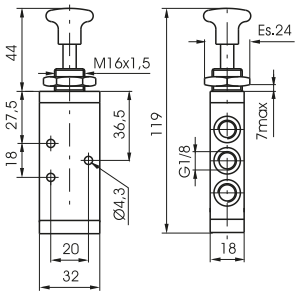

Weight 140 g

228.52.8.1/Ⓒ

Push button 2 positions

Coding: 228.Ⓣ.8/Ⓒ

Operational characteristics	
Fluid	Filtered air. No lubrication needed, if applied it shall be continuous
Max working pressure (bar)	10
Temperature °C	-5 ÷ +70
Flow rate at 6 bar with Δp=1 (Nl/min)	540
Orifice size (mm)	6
Working ports size	G1/8"

Ⓣ	TYPE
	32 = 3 ways
	52 = 5 ways
Ⓒ	BUTTON COLOR
	1 = Red
	2 = Black
	3 = Green

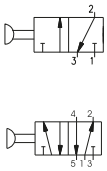

3 ways

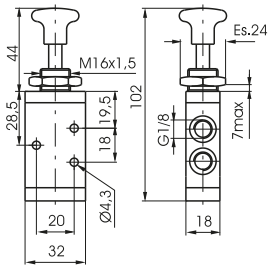

Weight 120 g

228.32.8/Ⓒ

5 ways

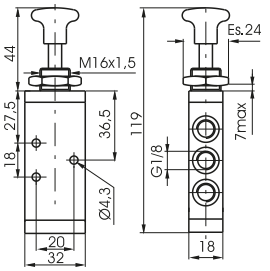

Weight 140 g

228.52.8/Ⓒ

Overall dimensions and technical information are provided solely for informative purposes and may be modified without notice

Lever lateral - Spring

Coding: 228.Ⓣ.9.1/Ⓒ

Operational characteristics	
Fluid	Filtered air. No lubrication needed, if applied it shall be continuous
Max working pressure (bar)	10
Temperature °C	-5 ÷ +70
Flow rate at 6 bar with Δp=1 (Nl/min)	540
Orifice size (mm)	6
Working ports size	G1/8"

Ⓣ	TYPE
	32 = 3 ways
	52 = 5 ways
Ⓒ	LEVER COLOR
	1 = Red
	2 = Black
	3 = Green

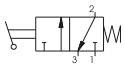

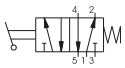

3 ways

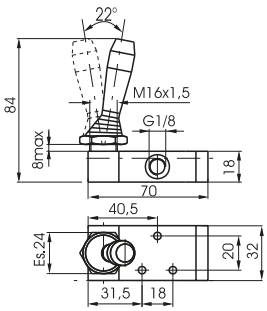

Weight 140 g

228.32.9.1/Ⓒ

5 ways

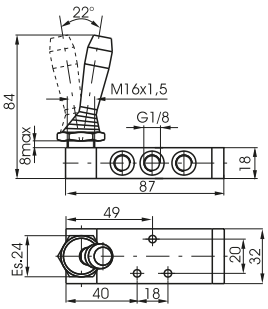

Weight 160 g

228.52.9.1/Ⓒ

Lever lateral 2 positions

Coding: 228.Ⓣ.9/Ⓒ

Operational characteristics	
Fluid	Filtered air. No lubrication needed, if applied it shall be continuous
Max working pressure (bar)	10
Temperature °C	-5 ÷ +70
Flow rate at 6 bar with Δp=1 (Nl/min)	540
Orifice size (mm)	6
Working ports size	G1/8"

Ⓣ	TYPE
	32 = 3 ways
	52 = 5 ways
Ⓒ	LEVER COLOR
	1 = Red
	2 = Black
	3 = Green

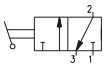

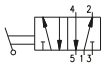

3 ways

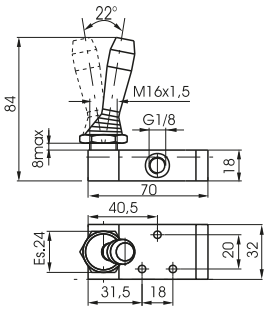

Weight 140 g

228.32.9/Ⓒ

5 ways

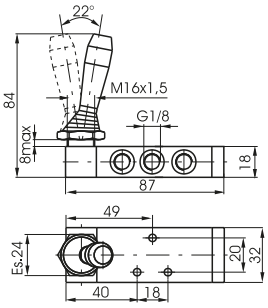

Weight 160 g

228.52.9/Ⓒ

Pedal aluminium 2 positions

Coding: 228.Ⓣ.10

Operational characteristics	
Fluid	Filtered air. No lubrication needed, if applied it shall be continuous
Max working pressure (bar)	10
Temperature °C	-5 ÷ +70
Flow rate at 6 bar with Δp=1 (Nl/min)	540
Orifice size (mm)	6
Working ports size	G1/8"

Ⓣ	TYPE
	32 = 3 ways
	52 = 5 ways

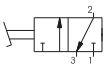

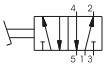

3 ways

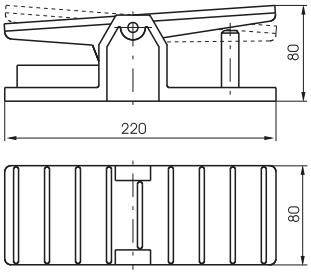

Weight 790 g

228.32.10

5 ways

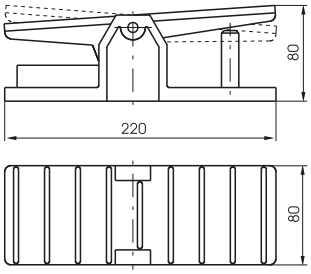

Weight 810 g

228.52.10

Pedal aluminium - Spring

Coding: 228.Ⓣ.10.1

Operational characteristics	
Fluid	Filtered air. No lubrication needed, if applied it shall be continuous
Max working pressure (bar)	10
Temperature °C	-5 ÷ +70
Flow rate at 6 bar with Δp=1 (Nl/min)	540
Orifice size (mm)	6
Working ports size	G1/8"

	TYPE
Ⓣ	**32** = 3 ways
	52 = 5 ways

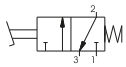

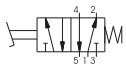

3 ways

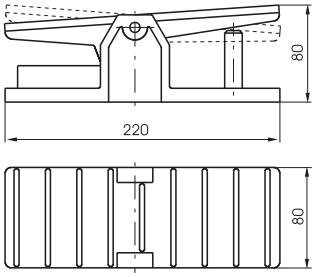

Weight 790 g

228.32.10.1

5 ways

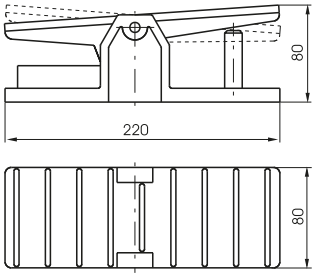

Weight 810 g

228.52.10.1

Pedal protected - Spring

Coding: 228.Ⓣ.10.Ⓥ

Operational characteristics	
Fluid	Filtered air. No lubrication needed, if applied it shall be continuous
Max working pressure (bar)	10
Temperature °C	-5 ÷ +70
Flow rate at 6 bar with Δp=1 (Nl/min)	540
Orifice size (mm)	6
Working ports size	G1/8"

	TYPE	
Ⓣ	**32** = 3 ways	
	52 = 5 ways	
Ⓥ	VERSION	
	1/1 =	Standard version
	2/1 =	without safety device

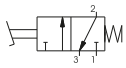

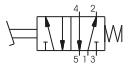

3 ways

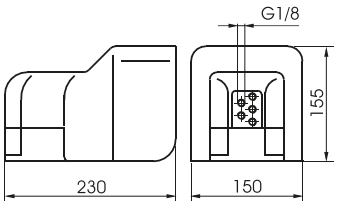

Weight 1120 g

228.32.10.Ⓥ

5 ways

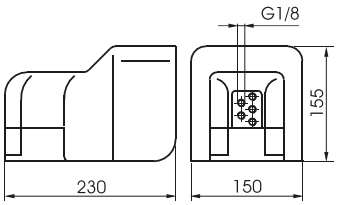

Weight 1120 g

228.52.10.Ⓥ

Pedal protected 2 positions

Coding: 228.Ⓣ.10/1

Operational characteristics	
Fluid	Filtered air. No lubrication needed, if applied it shall be continuous
Max working pressure (bar)	10
Temperature °C	-5 ÷ +70
Flow rate at 6 bar with Δp=1 (Nl/min)	540
Orifice size (mm)	6
Working ports size	G1/8"

	TYPE
Ⓣ	**32** = 3 ways
	52 = 5 ways

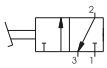

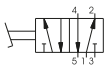

3 ways

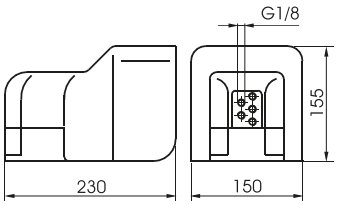

Weight 1120 g

228.32.10/1

5 ways

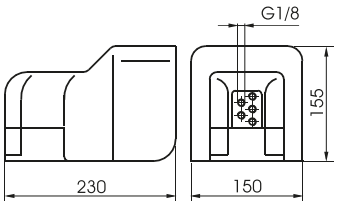

Weight 1120 g

228.52.10/1

Overall dimensions and technical information are provided solely for informative purposes and may be modified without notice

Pedal plastic miniaturized - Spring

Coding: 228.52.10.Ⓕ

Operational characteristics	
Fluid	Filtered air. No lubrication needed, if applied it shall be continuous
Max working pressure (bar)	10
Temperature °C	-5 ÷ +70
Flow rate at 6 bar with Δp=1 (Nl/min)	540
Orifice size (mm)	6
Working ports size	G1/8"

Ⓕ	FUNCTION
	1P = Standard version
	1PX = Stainless steel spool

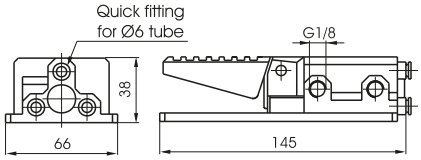

Weight 230 g

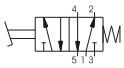

Lever lateral spring centre 3 positions

Coding: 228.53.Ⓕ.9.1/Ⓒ

Operational characteristics	
Fluid	Filtered air. No lubrication needed, if applied it shall be continuous
Max working pressure (bar)	10
Temperature °C	-5 ÷ +70
Flow rate at 6 bar with Δp=1 (Nl/min)	540
Orifice size (mm)	6
Working ports size	G1/8"

Ⓕ	FUNCTION
	31 = Closed centres
	32 = Open centres
	33 = Pressured centres
Ⓒ	LEVER COLOR
	1 = Red
	2 = Black
	3 = Green

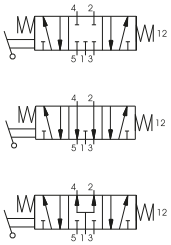

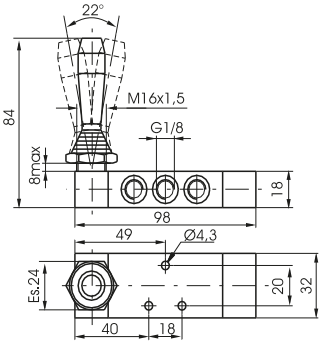

Weight 190 g

Lever lateral 3 positions detent

Coding: 228.53.Ⓕ.9/Ⓒ

Operational characteristics	
Fluid	Filtered air. No lubrication needed, if applied it shall be continuous
Max working pressure (bar)	10
Temperature °C	-5 ÷ +70
Flow rate at 6 bar with Δp=1 (Nl/min)	540
Orifice size (mm)	6
Working ports size	G1/8"

Ⓕ	FUNCTION
	31 = Closed centres
	32 = Open centres
	33 = Pressured centres
Ⓒ	LEVER COLOR
	1 = Red
	2 = Black
	3 = Green

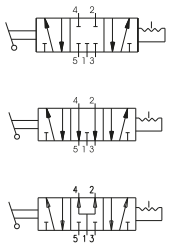

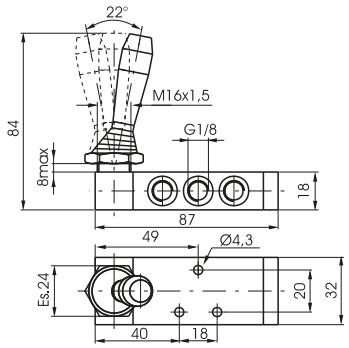

Weight 160 g

Lever central (spring 3 pos.) Operator, Levar, Spole in Technopolymer

Coding: 228.53.32.99P/Ⓒ

Operational characteristics	
Fluid	Filtered air. No lubrication needed, if applied it shall be continuous
Max working pressure (bar)	10
Temperature °C	-5 ÷ +70
Flow rate at 6 bar with Δp=1 (Nl/min)	410
Orifice size (mm)	6
Working ports size	G1/8"

	LEVER COLOR
Ⓒ	1 = Red
	2 = Black

Weight 140 g

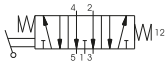

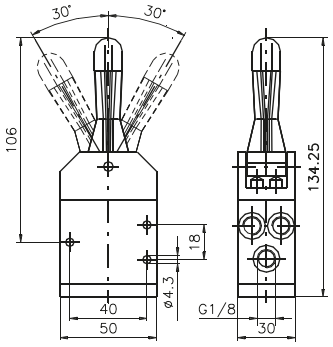

Lever central (spring 3 pos.) Levar in Technopolymer

Coding: 228.53.32.99/Ⓒ

Operational characteristics	
Fluid	Filtered air. No lubrication needed, if applied it shall be continuous
Max working pressure (bar)	10
Temperature °C	-5 ÷ +70
Flow rate at 6 bar with Δp=1 (Nl/min)	410
Orifice size (mm)	6
Working ports size	G1/8"

	LEVER COLOR
Ⓒ	1 = Red
	2 = Black

Weight 140 g

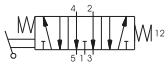

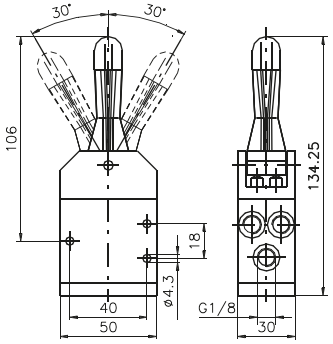

Lever central Metal (spring 3 pos.) One position stable

Coding: 228.53.32.99/Ⓒ.S

Operational characteristics	
Fluid	Filtered air. No lubrication needed, if applied it shall be continuous
Max working pressure (bar)	10
Temperature °C	-5 ÷ +70
Flow rate at 6 bar with Δp=1 (Nl/min)	410
Orifice size (mm)	6
Working ports size	G1/8"

	LEVER COLOR
Ⓒ	1 = Red
	2 = Black

Weight 140 g

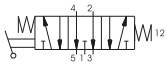

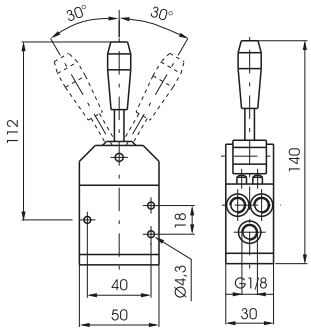

Overall dimensions and technical information are provided solely for informative purposes and may be modified without notice

Lever central Metal

Coding: 228.53.32.99.Ⓕ/Ⓒ

Operational characteristics	
Fluid	Filtered air. No lubrication needed, if applied it shall be continuous
Max working pressure (bar)	10
Temperature °C	-5 ÷ +70
Flow rate at 6 bar with Δp=1 (Nl/min)	410
Orifice size (mm)	6
Working ports size	G1/8"

Ⓕ	FUNCTION
	2 = 2 Stable positions
	3 = 3 pos. stable
Ⓒ	LEVER COLOR
	1 = Red
	2 = Black

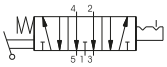

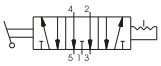

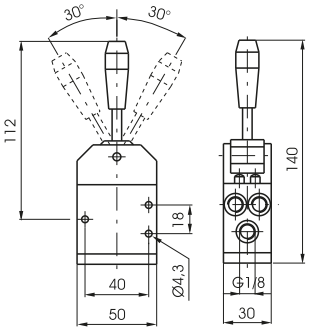

Weight 140 g

Pedal - Spring 3 positions

Coding: 228.53.Ⓕ.10.1

Operational characteristics	
Fluid	Filtered air. No lubrication needed, if applied it shall be continuous
Max working pressure (bar)	10
Temperature °C	-5 ÷ +70
Flow rate at 6 bar with Δp=1 (Nl/min)	410
Orifice size (mm)	6
Working ports size	G1/8"

Ⓕ	FUNCTION
	31 = Closed centres
	32 = Open centres

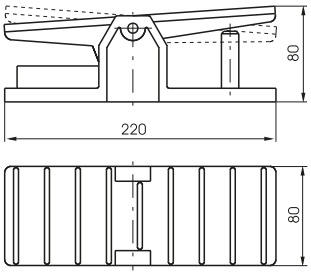

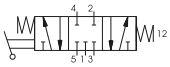

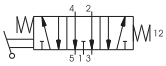

Weight 810 g

Pneumatic - Spring

Coding: 228.Ⓣ.11.1

Operational characteristics	
Fluid	Filtered air. No lubrication needed, if applied it shall be continuous
Max working pressure (bar)	10
Temperature °C	-5 ÷ +70
Flow rate at 6 bar with Δp=1 (Nl/min)	540
Orifice size (mm)	6
Working ports size	G1/8"
Pilot ports size	G1/8"

	TYPE
Ⓣ	**32** = 3 ways
	52 = 5 ways

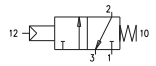

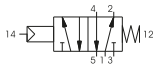

3 ways

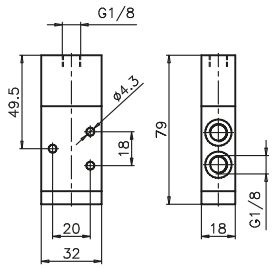

Weight 110 g
Minimum piloting pressure 2,5 bar

228.32.11.1

5 ways

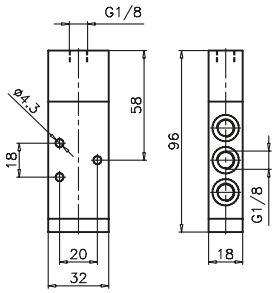

Weight 130 g
Minimum piloting pressure 2,5 bar

228.52.11.1

Pneumatic - Differential external

Coding: 228.Ⓣ.11.12

Operational characteristics	
Fluid	Filtered air. No lubrication needed, if applied it shall be continuous
Max working pressure (bar)	10
Temperature °C	-5 ÷ +70
Flow rate at 6 bar with Δp=1 (Nl/min)	540
Orifice size (mm)	6
Working ports size	G1/8"
Pilot ports size	G1/8"

	TYPE
Ⓣ	**32** = 3 ways
	52 = 5 ways

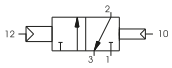

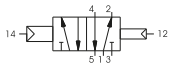

3 ways

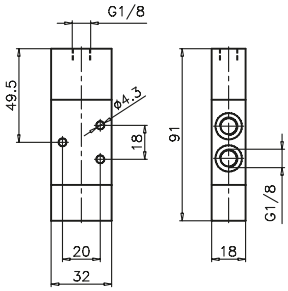

Weight 140 g
Minimum piloting pressure 2,5 bar

228.32.11.12

5 ways

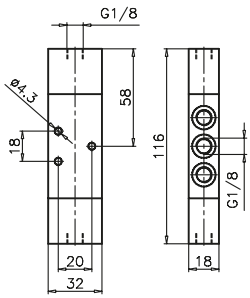

Weight 160 g
Minimum piloting pressure 2,5 bar

228.52.11.12

Pneumatic - Differential self aligned

Coding: 228.Ⓣ.11.12/1

Operational characteristics	
Fluid	Filtered air. No lubrication needed, if applied it shall be continuous
Max working pressure (bar)	10
Temperature °C	-5 ÷ +70
Flow rate at 6 bar with Δp=1 (Nl/min)	540
Orifice size (mm)	6
Working ports size	G1/8"
Pilot ports size	G1/8"

	TYPE
Ⓣ	**32** = 3 ways
	52 = 5 ways

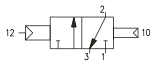

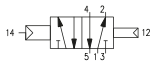

3 ways

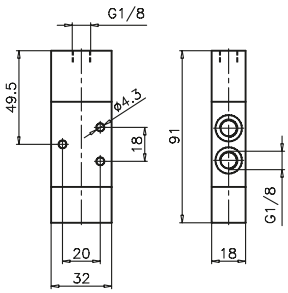

Weight 130 g
Minimum piloting pressure 2,5 bar

228.32.11.12/1

5 ways

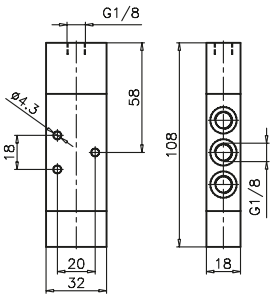

Weight 150 g
Minimum piloting pressure 2,5 bar

228.52.11.12/1

Overall dimensions and technical information are provided solely for informative purposes and may be modified without notice

Pneumatic - Pneumatic

Coding: 228.Ⓣ.11.11

Operational characteristics	
Fluid	Filtered air. No lubrication needed, if applied it shall be continuous
Max working pressure (bar)	10
Temperature °C	-5 ÷ +70
Flow rate at 6 bar with Δp=1 (Nl/min)	540
Orifice size (mm)	6
Working ports size	G1/8"
Pilot ports size	G1/8"

	TYPE
Ⓣ	**32** = 3 ways
	52 = 5 ways

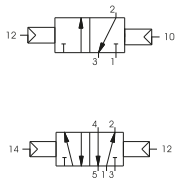

3 ways

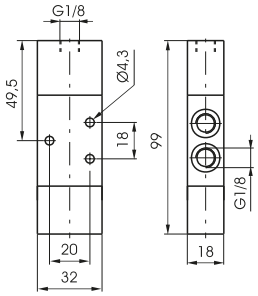

Weight 140 g
Minimum piloting pressure 2 bar

228.32.11.11

5 ways

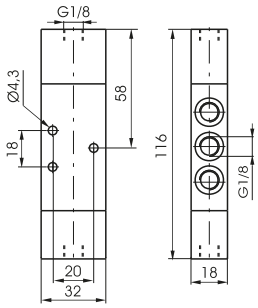

Weight 160 g
Minimum piloting pressure 2 bar

228.52.11.11

Amplified pneumatic - Spring

Coding: 228.Ⓣ.13.1

Operational characteristics	
Fluid	Filtered air. No lubrication needed, if applied it shall be continuous
Max working pressure (bar)	10
Temperature °C	-5 ÷ +70
Flow rate at 6 bar with Δp=1 (Nl/min)	540
Orifice size (mm)	6
Working ports size	G1/8"
Pilot ports size	G1/8"

	TYPE
Ⓣ	**32** = 3 ways
	52 = 5 ways

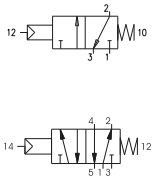

3 ways

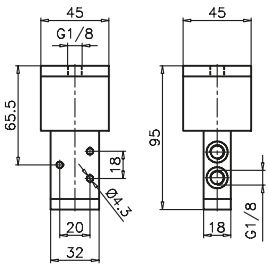

Weight 260 g
Minimum piloting pressure 0,5 bar

228.32.13.1

5 ways

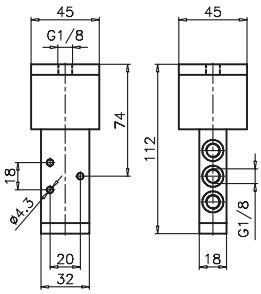

Weight 290 g
Minimum piloting pressure 0,5 bar

228.52.13.1

Pneumatic - Pneumatic 5 ways 3 connections

Coding: 228.53.Ⓕ.11.11

Operational characteristics	
Fluid	Filtered air. No lubrication needed, if applied it shall be continuous
Max working pressure (bar)	10
Temperature °C	-5 ÷ +70
Flow rate at 6 bar with Δp=1 (Nl/min)	410
Orifice size (mm)	6
Working ports size	G1/8"
Pilot ports size	G1/8"

	FUNCTION
Ⓕ	**31** = Closed centres
	32 = Open centres
	33 = Pressured centres

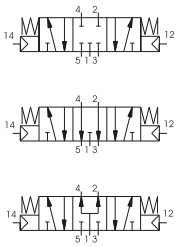

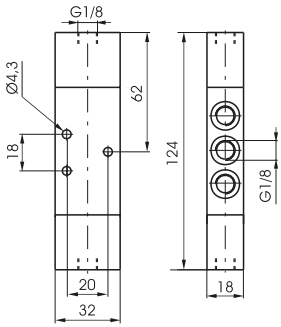

Weight 180 g
Minimum piloting pressure 3 bar

228.53.Ⓕ.11.11

Tappet panel - Spring

Coding: 224.Ⓣ.1.1

Operational characteristics	
Fluid	Filtered air. No lubrication needed, if applied it shall be continuous
Max working pressure (bar)	10
Temperature °C	-5 ÷ +70
Flow rate at 6 bar with Δp=1 (Nl/min)	1360
Orifice size (mm)	8
Working ports size	G1/4"

Ⓣ	TYPE
	32 = 3 ways
	52 = 5 ways

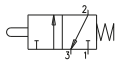

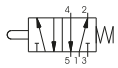

3 ways

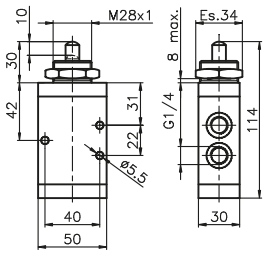

Weight 370 g
Operating force 71,5 N

224.32.1.1

5 ways

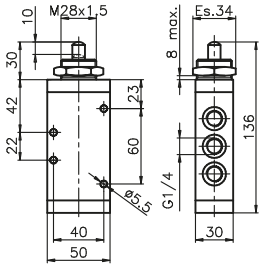

Weight 455 g
Operating force 71,5 N

224.52.1.1

Lever roller - Spring

Coding: 224.Ⓣ.2.1

Operational characteristics	
Fluid	Filtered air. No lubrication needed, if applied it shall be continuous
Max working pressure (bar)	10
Temperature °C	-5 ÷ +70
Flow rate at 6 bar with Δp=1 (Nl/min)	1360
Orifice size (mm)	8
Working ports size	G1/4"

Ⓣ	TYPE
	32 = 3 ways
	52 = 5 ways

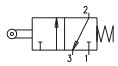

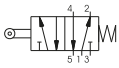

3 ways

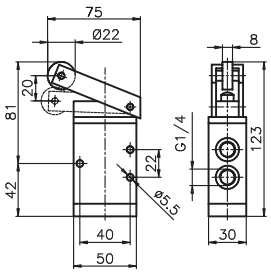

Weight 510 g
Operating force 35 N

224.32.2.1

5 ways

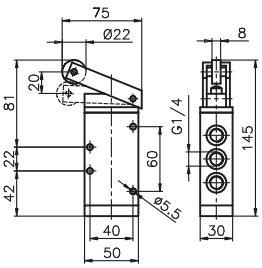

Weight 595 g
Operating force 35 N

224.52.2.1

Lever roller unidirectional - Spring

Coding: 224.Ⓣ.3.1

Operational characteristics	
Fluid	Filtered air. No lubrication needed, if applied it shall be continuous
Max working pressure (bar)	10
Temperature °C	-5 ÷ +70
Flow rate at 6 bar with Δp=1 (Nl/min)	1360
Orifice size (mm)	8
Working ports size	G1/4"

Ⓣ	TYPE
	32 = 3 ways
	52 = 5 ways

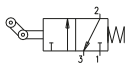

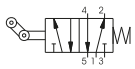

3 ways

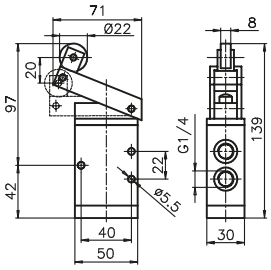

Weight 525 g
Operating force 35 N

224.32.3.1

5 ways

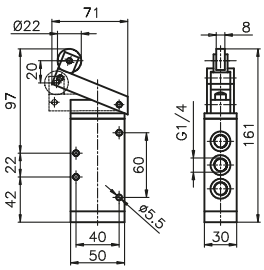

Weight 610 g
Operating force 35 N

224.52.3.1

Overall dimensions and technical information are provided solely for informative purposes and may be modified without notice

Push button - Spring

Coding: 224.Ⓣ.8.1

Operational characteristics	
Fluid	Filtered air. No lubrication needed, if applied it shall be continuous
Max working pressure (bar)	10
Temperature °C	-5 ÷ +70
Flow rate at 6 bar with Δp=1 (Nl/min)	1360
Orifice size (mm)	8
Working ports size	G1/4"

	TYPE
Ⓣ	**32** = 3 ways
	52 = 5 ways

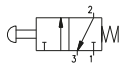

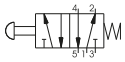

3 ways

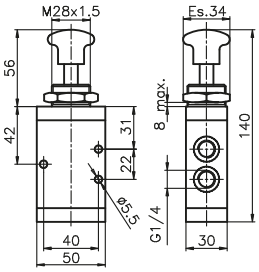

Weight 395 g
Operating force 71,5 N

224.32.8.1

5 ways

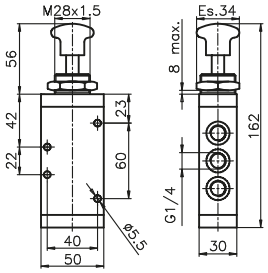

Weight 480 g
Operating force 71,5 N

224.52.8.1

Push button 2 positions

Coding: 224.Ⓣ.8

Operational characteristics	
Fluid	Filtered air. No lubrication needed, if applied it shall be continuous
Max working pressure (bar)	10
Temperature °C	-5 ÷ +70
Flow rate at 6 bar with Δp=1 (Nl/min)	1360
Orifice size (mm)	8
Working ports size	G1/4"

	TYPE
Ⓣ	**32** = 3 ways
	52 = 5 ways

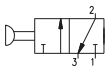

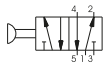

3 ways

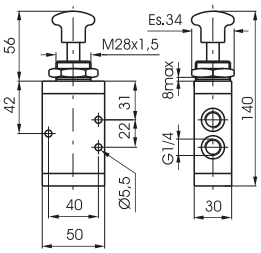

Weight 385 g
Operating force 13 N

224.32.8

5 ways

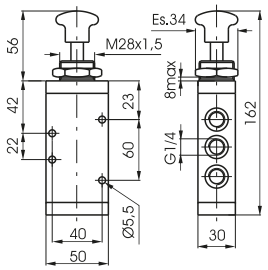

Weight 470 g
Operating force 13 N

224.52.8

Lever lateral - Spring

Coding: 224.Ⓣ.9.1/Ⓒ

Operational characteristics	
Fluid	Filtered air. No lubrication needed, if applied it shall be continuous
Max working pressure (bar)	10
Temperature °C	-5 ÷ +70
Flow rate at 6 bar with Δp=1 (Nl/min)	1360
Orifice size (mm)	8
Working ports size	G1/4"

	TYPE
Ⓣ	**32** = 3 ways
	52 = 5 ways
	LEVER COLOR
Ⓒ	**1** = Red
	2 = Black
	3 = Green

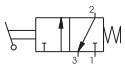

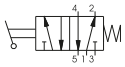

3 ways

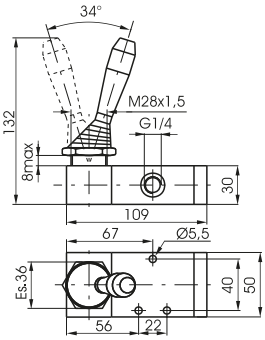

Weight 520 g

224.32.9.1/Ⓒ

5 ways

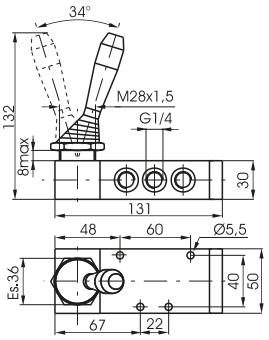

Weight 605 g

224.52.9.1/Ⓒ

Lever lateral 2 positions

Coding: 224.Ⓣ.9/Ⓒ

Operational characteristics	
Fluid	Filtered air. No lubrication needed, if applied it shall be continuous
Max working pressure (bar)	10
Temperature °C	-5 ÷ +70
Flow rate at 6 bar with Δp=1 (Nl/min)	1360
Orifice size (mm)	8
Working ports size	G1/4"

Ⓣ	TYPE
	32 = 3 ways
	52 = 5 ways
Ⓒ	LEVER COLOR
	1 = Red
	2 = Black
	3 = Green

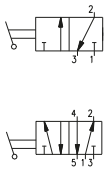

3 ways

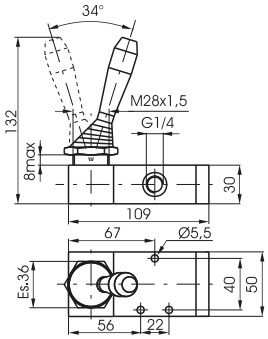

Weight 510 g

224.32.9/Ⓒ

5 ways

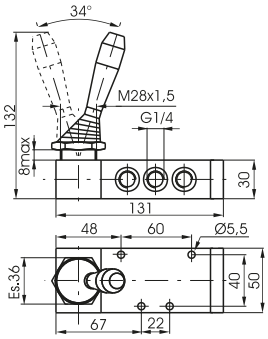

Weight 595 g

224.52.9/Ⓒ

Pedal aluminium - Spring

Coding: 224.Ⓣ.10.1

Operational characteristics	
Fluid	Filtered air. No lubrication needed, if applied it shall be continuous
Max working pressure (bar)	10
Temperature °C	-5 ÷ +70
Flow rate at 6 bar with Δp=1 (Nl/min)	1360
Orifice size (mm)	8
Working ports size	G1/4"

Ⓣ	TYPE
	32 = 3 ways
	52 = 5 ways

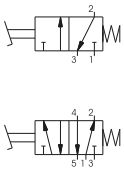

3 ways

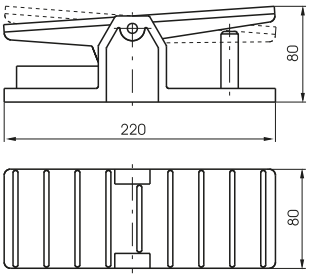

Weight 1070 g

224.32.10.1

5 ways

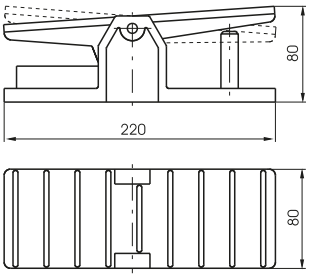

Weight 1155 g

224.52.10.1

Pedal aluminium 2 positions

Coding: 224.Ⓣ.10

Operational characteristics	
Fluid	Filtered air. No lubrication needed, if applied it shall be continuous
Max working pressure (bar)	10
Temperature °C	-5 ÷ +70
Flow rate at 6 bar with Δp=1 (Nl/min)	1360
Orifice size (mm)	8
Working ports size	G1/4"

Ⓣ	TYPE
	32 = 3 ways
	52 = 5 ways

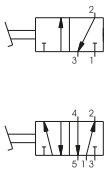

3 ways

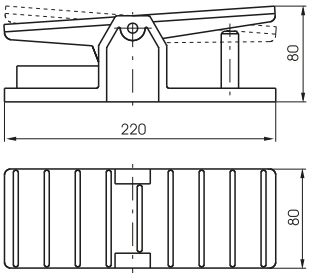

Weight 1060 g

224.32.10

5 ways

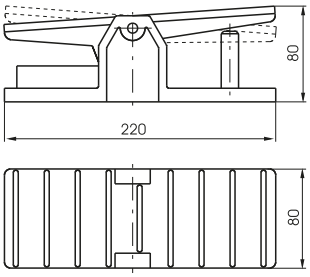

Weight 1145 g

224.52.10

Overall dimensions and technical information are provided solely for informative purposes and may be modified without notice

Lateral Lever spring - 3 positions

Coding: 224.53.Ⓕ.9.1/Ⓒ

Operational characteristics	
Fluid	Filtered air. No lubrication needed, if applied it shall be continuous
Max working pressure (bar)	10
Temperature °C	-5 ÷ +70
Flow rate at 6 bar with Δp=1 (Nl/min)	1280
Orifice size (mm)	8
Working ports size	G1/4"

Ⓕ	FUNCTION
	31 = Closed centres
	32 = Open centres
Ⓒ	LEVER COLOR
	1 = Red
	2 = Black
	3 = Green

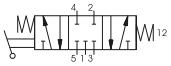

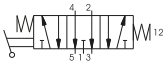

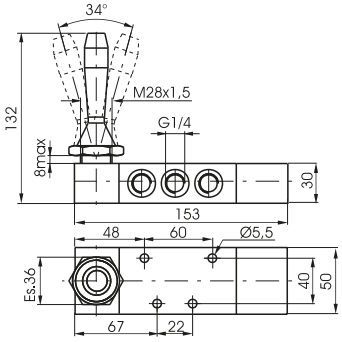

Weight 745 g

Lever lateral 3 positions detent

Coding: 224.53.Ⓕ.9/Ⓒ

Operational characteristics	
Fluid	Filtered air. No lubrication needed, if applied it shall be continuous
Max working pressure (bar)	10
Temperature °C	-5 ÷ +70
Flow rate at 6 bar with Δp=1 (Nl/min)	1280
Orifice size (mm)	8
Working ports size	G1/4"

Ⓕ	FUNCTION
	31 = Closed centres
	32 = Open centres
Ⓒ	LEVER COLOR
	1 = Red
	2 = Black
	3 = Green

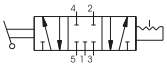

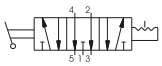

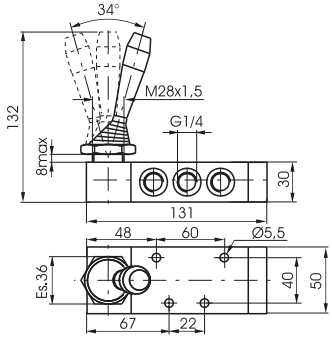

Weight 605 g

Lever lateral with locking device - 2 positions

Coding: 224.52.9.2

Operational characteristics	
Fluid	Filtered air. No lubrication needed, if applied it shall be continuous
Max working pressure (bar)	10
Temperature °C	-5 ÷ +70
Flow rate at 6 bar with Δp=1 (Nl/min)	1020
Orifice size (mm)	8
Working ports size	G1/4"

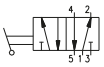

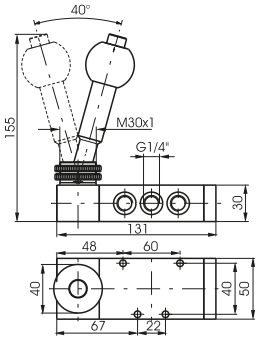

Weight 825 g

Lever lateral with locking device - Spring 3 positions

Coding: 224.53.Ⓕ.9.2

Operational characteristics	
Fluid	Filtered air. No lubrication needed, if applied it shall be continuous
Max working pressure (bar)	10
Temperature °C	-5 ÷ +70
Flow rate at 6 bar with Δp=1 (Nl/min)	1020
Orifice size (mm)	8
Working ports size	G1/4"

Ⓕ	FUNCTION
	31 = Closed centres
	32 = Open centres

Weight 965 g

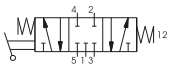

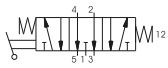

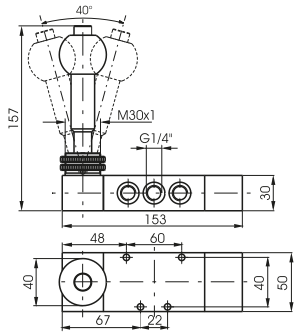

Pedal - Spring 3 positions

Coding: 224.53.Ⓕ.10.1

Operational characteristics	
Fluid	Filtered air. No lubrication needed, if applied it shall be continuous
Max working pressure (bar)	10
Temperature °C	-5 ÷ +70
Flow rate at 6 bar with Δp=1 (Nl/min)	1280
Orifice size (mm)	8
Working ports size	G1/4"

Ⓕ	FUNCTION
	31 = Closed centres
	32 = Open centres

Weight 1285 g

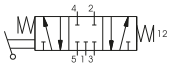

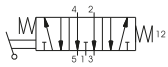

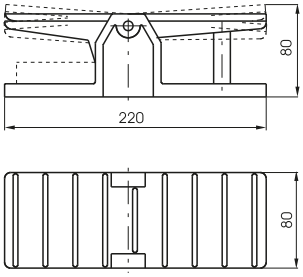

Pedal 3 positions

Coding: 224.53.Ⓕ.10

Operational characteristics	
Fluid	Filtered air. No lubrication needed, if applied it shall be continuous
Max working pressure (bar)	10
Temperature °C	-5 ÷ +70
Flow rate at 6 bar with Δp=1 (Nl/min)	1280
Orifice size (mm)	8
Working ports size	G1/4"

Ⓕ	FUNCTION
	31 = Closed centres
	32 = Open centres

Weight 1145 g

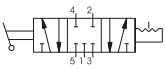

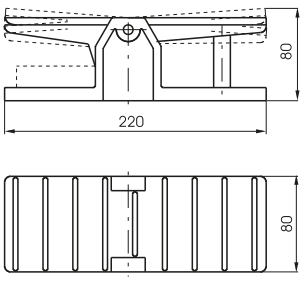

Overall dimensions and technical information are provided solely for informative purposes and may be modified without notice

Pneumatic - Spring

Coding: 224.Ⓣ.11.1

Operational characteristics	
Fluid	Filtered air. No lubrication needed, if applied it shall be continuous
Max working pressure (bar)	10
Temperature °C	-5 ÷ +70
Flow rate at 6 bar with Δp=1 (Nl/min)	1360
Orifice size (mm)	8
Working ports size	G1/4"
Pilot ports size	G1/8"

Ⓣ	TYPE
	32 = 3 ways
	52 = 5 ways

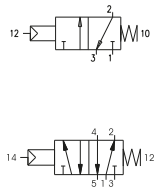

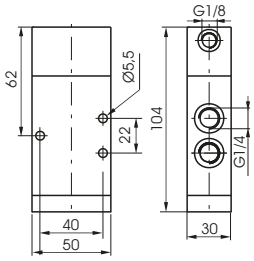

Weight 370 g
Minimum piloting pressure 2,5 bar

224.32.11.1

5 ways

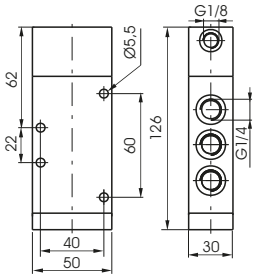

Weight 450 g
Minimum piloting pressure 2,5 bar

224.52.11.1

Pneumatic - Differential external

Coding: 224.Ⓣ.11.12

Operational characteristics	
Fluid	Filtered air. No lubrication needed, if applied it shall be continuous
Max working pressure (bar)	11
Temperature °C	-5 ÷ +70
Flow rate at 6 bar with Δp=1 (Nl/min)	1360
Orifice size (mm)	8
Working ports size	G1/4"
Pilot ports size	G1/8"

Ⓣ	TYPE
	32 = 3 ways
	52 = 5 ways

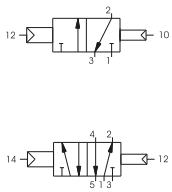

3 ways

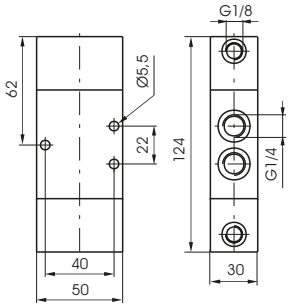

Weight 480 g
Minimum piloting pressure 2,5 bar

224.32.11.12

5 ways

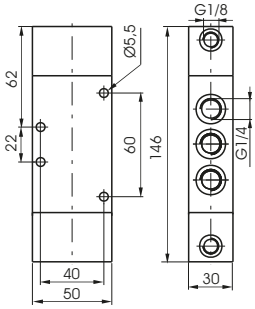

Weight 550 g
Minimum piloting pressure 2,5 bar

224.52.11.12

Pneumatic - Pneumatic

Coding: 224.Ⓣ.11.11

Operational characteristics	
Fluid	Filtered air. No lubrication needed, if applied it shall be continuous
Max working pressure (bar)	12
Temperature °C	-5 ÷ +70
Flow rate at 6 bar with Δp=1 (Nl/min)	1360
Orifice size (mm)	8
Working ports size	G1/4"
Pilot ports size	G1/8"

Ⓣ	TYPE
	32 = 3 ways
	52 = 5 ways

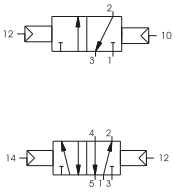

3 ways

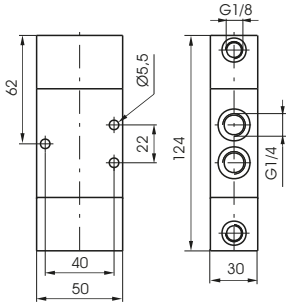

Weight 470 g
Minimum piloting pressure 2 bar

224.32.11.11

5 ways

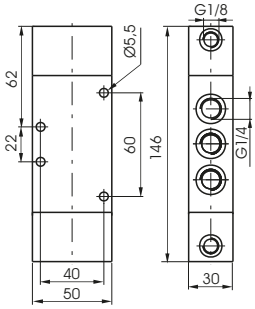

Weight 540 g
Minimum piloting pressure 2 bar

224.52.11.11

Pneumatic - Pneumatic 5 ways 3 connections

Coding: 224.53.Ⓕ.11.11

Operational characteristics	
Fluid	Filtered air. No lubrication needed, if applied it shall be continuous
Max working pressure (bar)	13
Temperature °C	-5 ÷ +70
Flow rate at 6 bar with Δp=1 (Nl/min)	1280
Orifice size (mm)	8
Working ports size	G1/4"
Pilot ports size	G1/8"

	FUNCTION
Ⓕ	**31** = Closed centres
	32 = Open centres
	33 = Pressured centres

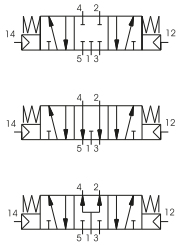

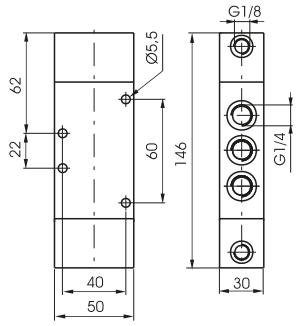

Weight 550 g
Minimum piloting pressure 3 bar

Overall dimensions and technical information are provided solely for informative purposes and may be modified without notice

Pedal protected 2 positions

Coding: 214.Ⓣ.10/1

Operational characteristics	
Fluid	Filtered air. No lubrication needed, if applied it shall be continuous
Max working pressure (bar)	10
Temperature °C	-5 ÷ +70
Flow rate at 6 bar with Δp=1 (Nl/min)	1360
Orifice size (mm)	8
Working ports size	G1/4"

Ⓣ	TYPE
	32 = 3 ways
	52 = 5 ways

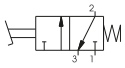

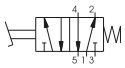

3 ways

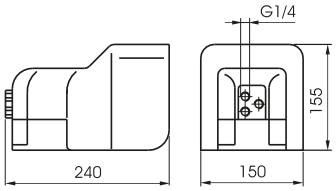

Weight 1730 g

214.32.10.Ⓥ

5 ways

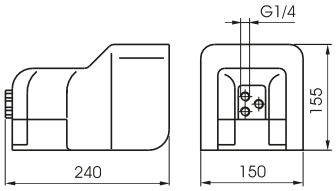

Weight 1730 g

214.52.10.Ⓥ

Pedal protected - Spring

Coding: 214.Ⓣ.10.Ⓥ

Operational characteristics	
Fluid	Filtered air. No lubrication needed, if applied it shall be continuous
Max working pressure (bar)	10
Temperature °C	-5 ÷ +70
Flow rate at 6 bar with Δp=1 (Nl/min)	1360
Orifice size (mm)	8
Working ports size	G1/4"

Ⓣ	TYPE	
	32 = 3 ways	
	52 = 5 ways	
Ⓥ	VERSION	
	1/1 =	Standard version
	2/1 =	without safety device

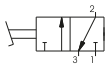

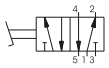

3 ways

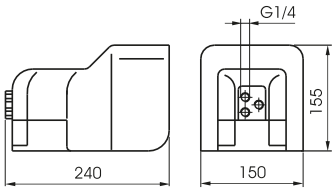

Weight 1730 g

214.32.10/1

5 ways

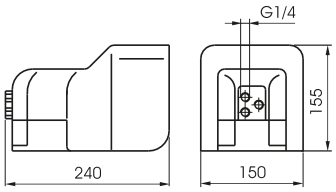

Weight 1730 g

214.52.10/1

Lever lateral - Spring

Coding: 212.Ⓣ.9.1

Operational characteristics	
Fluid	Filtered air. No lubrication needed, if applied it shall be continuous
Max working pressure (bar)	10
Temperature °C	-5 ÷ +70
Flow rate at 6 bar with Δp=1 (Nl/min)	3500
Orifice size (mm)	15
Working ports size	G1/2"

	TYPE
Ⓣ	**32** = 3 ways
	52 = 5 ways

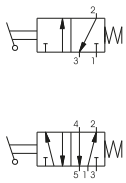

3 ways

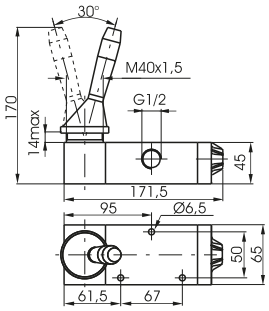

Weight 1480 g

212.32.9.1

5 ways

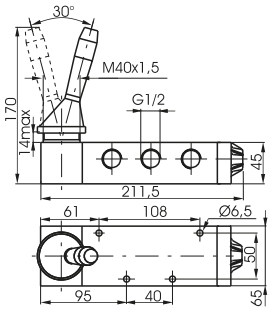

Weight 1765 g

212.52.9.1

Lever lateral 2 positions

Coding: 212.Ⓣ.9

Operational characteristics	
Fluid	Filtered air. No lubrication needed, if applied it shall be continuous
Max working pressure (bar)	10
Temperature °C	-5 ÷ +70
Flow rate at 6 bar with Δp=1 (Nl/min)	3500
Orifice size (mm)	15
Working ports size	G1/2"

	TYPE
Ⓣ	**32** = 3 ways
	52 = 5 ways

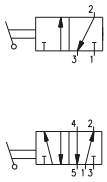

3 ways

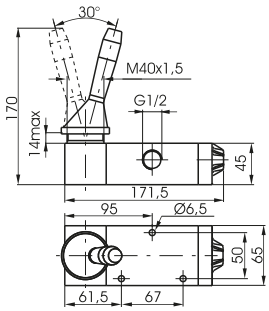

Weight 1460 g

212.32.9

5 ways

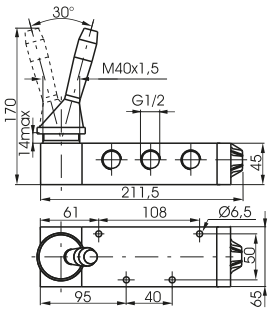

Weight 1745 g

212.52.9

Lever lateral spring centre 3 positions

Coding: 212.53.Ⓕ.9.1

Operational characteristics	
Fluid	Filtered air. No lubrication needed, if applied it shall be continuous
Max working pressure (bar)	10
Temperature °C	-5 ÷ +70
Flow rate at 6 bar with Δp=1 (Nl/min)	3000
Orifice size (mm)	15
Working ports size	G1/2"

	FUNCTION
Ⓕ	**31** = Closed centres
	32 = Open centres

Weight 2100 g

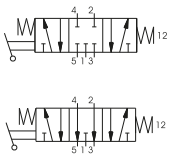

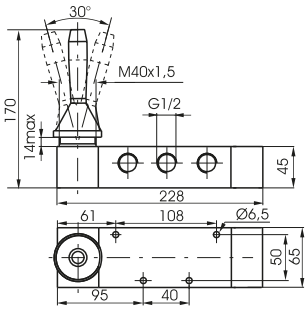

Overall dimensions and technical information are provided solely for informative purposes and may be modified without notice

Lever lateral 3 positions detent

Coding: 212.53.Ⓕ.9

Operational characteristics	
Fluid	Filtered air. No lubrication needed, if applied it shall be continuous
Max working pressure (bar)	10
Temperature °C	-5 ÷ +70
Flow rate at 6 bar with Δp=1 (Nl/min)	3000
Orifice size (mm)	15
Working ports size	G1/2"

Ⓕ	FUNCTION
	31 = Closed centres
	32 = Open centres

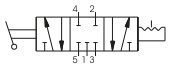

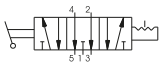

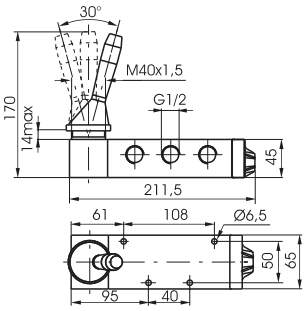

Weight 1765 g

Pneumatic - Spring

Coding: 212.Ⓣ.11.1

Operational characteristics	
Fluid	Filtered air. No lubrication needed, if applied it shall be continuous
Max working pressure (bar)	10
Temperature °C	-5 ÷ +70
Flow rate at 6 bar with Δp=1 (Nl/min)	3500
Orifice size (mm)	15
Working ports size	G1/2"
Pilot ports size	G1/8"

	TYPE
Ⓣ	**32** = 3 ways
	52 = 5 ways

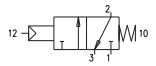

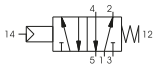

3 ways

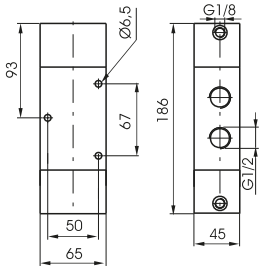

Weight 1110 g
Minimum piloting pressure 2,5 bar

212.32.11.1

5 ways

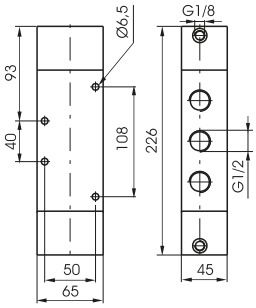

Weight 1390 g
Minimum piloting pressure 2,5 bar

212.52.11.1

Pneumatic - Differential external

Coding: 212.Ⓣ.11.12

Operational characteristics	
Fluid	Filtered air. No lubrication needed, if applied it shall be continuous
Max working pressure (bar)	10
Temperature °C	-5 ÷ +70
Flow rate at 6 bar with Δp=1 (Nl/min)	3500
Orifice size (mm)	15
Working ports size	G1/2"
Pilot ports size	G1/8"

	TYPE
Ⓣ	**32** = 3 ways
	52 = 5 ways

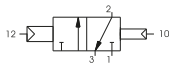

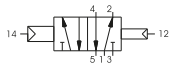

3 ways

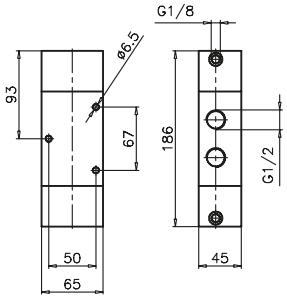

Weight 1380 g
Minimum piloting pressure 2,5 bar

212.32.11.12

5 ways

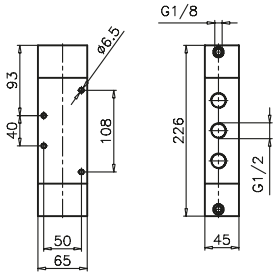

Weight 1660 g
Minimum piloting pressure 2,5 bar

212.52.11.12

Pneumatic - Pneumatic

Coding: 212.Ⓣ.11.11

Operational characteristics	
Fluid	Filtered air. No lubrication needed, if applied it shall be continuous
Max working pressure (bar)	10
Temperature °C	-5 ÷ +70
Flow rate at 6 bar with Δp=1 (Nl/min)	3500
Orifice size (mm)	15
Working ports size	G1/2"
Pilot ports size	G1/8"

	TYPE
Ⓣ	**32** = 3 ways
	52 = 5 ways

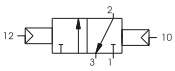

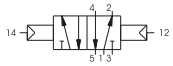

3 ways

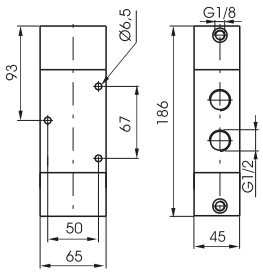

Weight 1350 g
Minimum piloting pressure 2 bar

212.32.11.11

5 ways

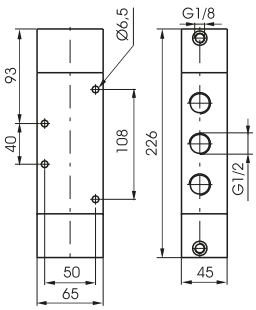

Weight 1630 g
Minimum piloting pressure 2 bar

212.52.11.11

Overall dimensions and technical information are provided solely for informative purposes and may be modified without notice

Pneumatic - Pneumatic 5 ways 3 connections

Coding: 212.53.Ⓕ.11.11

Operational characteristics	
Fluid	Filtered air. No lubrication needed, if applied it shall be continuous
Max working pressure (bar)	10
Temperature °C	-5 ÷ +70
Flow rate at 6 bar with Δp=1 (Nl/min)	3000
Orifice size (mm)	15
Working ports size	G1/2"
Pilot ports size	G1/8"

	FUNCTION
Ⓕ	**31** = Closed centres
	32 = Open centres
	33 = Pressured centres

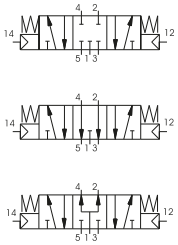

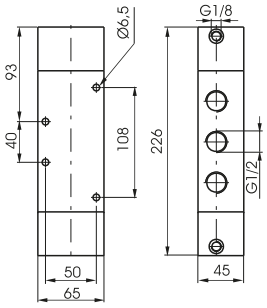

Weight 1650 g
Minimum piloting pressure 3 bar

Pneumatic - Differential external

Coding: 212/2.Ⓣ.11.1

Operational characteristics	
Fluid	Filtered air. No lubrication needed, if applied it shall be continuous
Max working pressure (bar)	10
Temperature °C	-5 ÷ +70
Flow rate at 6 bar with Δp=1 (Nl/min)	3600
Orifice size (mm)	15
Working ports size	G1/2"
Pilot ports size	G1/8"

	TYPE
Ⓣ	**32** = 3 ways
	52 = 5 ways

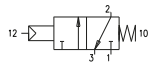

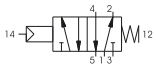

3 ways

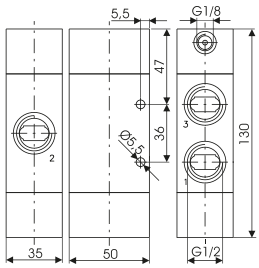

Weight 524 g
Minimum piloting pressure 2,5 bar

212/2.32.11.1

5 ways

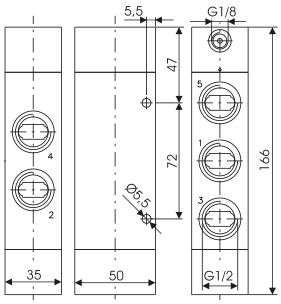

Weight 644 g
Minimum piloting pressure 2,5 bar

212/2.52.11.1

Pneumatic - Differential self aligned

Coding: 212/2.Ⓣ.11.12

Operational characteristics	
Fluid	Filtered air. No lubrication needed, if applied it shall be continuous
Max working pressure (bar)	10
Temperature °C	-5 ÷ +70
Flow rate at 6 bar with Δp=1 (Nl/min)	3600
Orifice size (mm)	15
Working ports size	G1/2"
Pilot ports size	G1/8"

	TYPE
Ⓣ	**32** = 3 ways
	52 = 5 ways

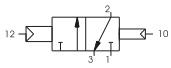

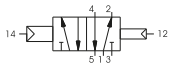

3 ways

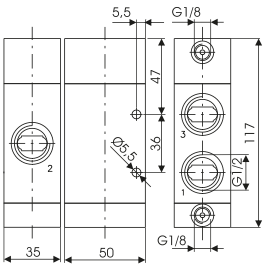

Weight 464 g
Minimum piloting pressure 2,5 bar

212/2.32.11.12

5 ways

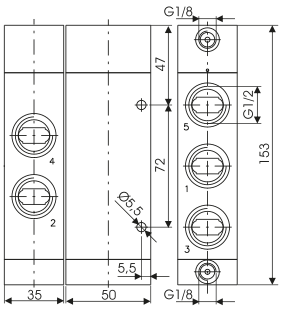

Weight 586 g
Minimum piloting pressure 2,5 bar

212/2.52.11.12

Pneumatic - Pneumatic

Coding: 212/2.Ⓣ.11.12.Ⓕ

Operational characteristics	
Fluid	Filtered air. No lubrication needed, if applied it shall be continuous
Max working pressure (bar)	10
Temperature °C	-5 ÷ +70
Flow rate at 6 bar with Δp=1 (Nl/min)	3600
Orifice size (mm)	15
Working ports size	G1/2"
Pilot ports size	G1/8"

	TYPE
Ⓣ	**32** = 3 ways
	52 = 5 ways
Ⓕ	FUNCTION
	1.C = Normally closed
	1.A = Normally open
	1 = Self-feeding

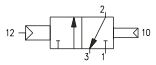

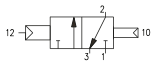

3 ways

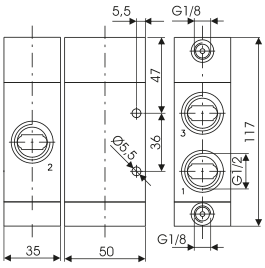

Weight 466 g
Minimum piloting pressure 2,5 bar

212/2.32.11.12/Ⓕ

5 ways

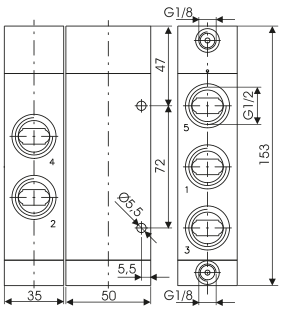

Weight 588 g
Minimum piloting pressure 2,5 bar

212/2.52.11.12/Ⓕ

Overall dimensions and technical information are provided solely for informative purposes and may be modified without notice

Amplified pneumatic - Spring

Coding: 212/2.Ⓣ.11.11

Operational characteristics	
Fluid	Filtered air. No lubrication needed, if applied it shall be continuous
Max working pressure (bar)	10
Temperature °C	-5 ÷ +70
Flow rate at 6 bar with Δp=1 (Nl/min)	3600
Orifice size (mm)	15
Working ports size	G1/2"
Pilot ports size	G1/8"

	TYPE
Ⓣ	**32** = 3 ways
	52 = 5 ways

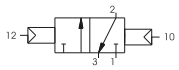

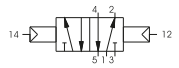

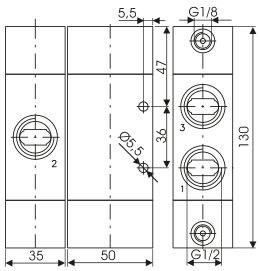

Weight 518 g
Minimum piloting pressure 2,5 bar

212/2.32.11.11

5 ways

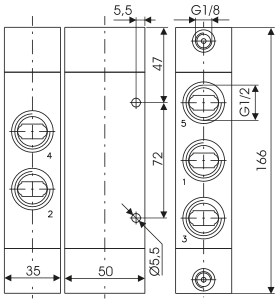

Weight 640 g
Minimum piloting pressure 2,5 bar

212/2.52.11.11

Pneumatic - Pneumatic 5 ways 3 connections

Coding: 212/2.53.Ⓕ.11.11

Operational characteristics	
Fluid	Filtered air. No lubrication needed, if applied it shall be continuous
Max working pressure (bar)	10
Temperature °C	-5 ÷ +70
Flow rate at 6 bar with Δp=1 (Nl/min)	3300
Orifice size (mm)	15
Working ports size	G1/2"
Pilot ports size	G1/8"

	FUNCTION
Ⓕ	**31** = Closed centres
	32 = Open centres
	33 = Pressured centres

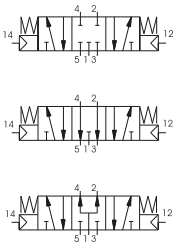

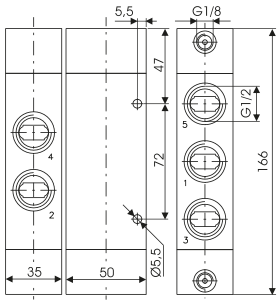

Weight 684 g
Minimum piloting pressure 3 bar

Lever lateral - Spring

Coding: 211.Ⓣ.9.1

Operational characteristics	
Fluid	Filtered air. No lubrication needed, if applied it shall be continuous
Max working pressure (bar)	10
Temperature °C	-5 ÷ +70
Flow rate at 6 bar with Δp=1 (Nl/min)	6500
Orifice size (mm)	20
Working ports size	G1"

	TYPE
Ⓣ	**32** = 3 ways
	52 = 5 ways

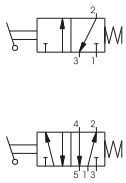

3 ways

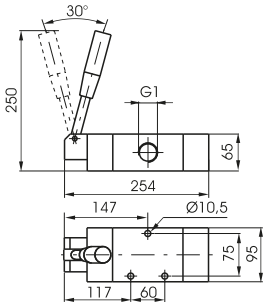

Weight 4300 g

211.32.9.1

5 ways

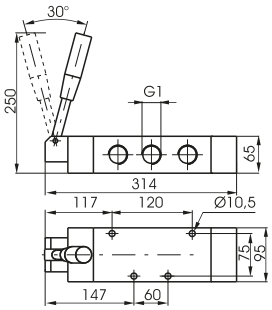

Weight 4900 g

211.52.9.1

Lever lateral 2 positions

Coding: 211.Ⓣ.9

Operational characteristics	
Fluid	Filtered air. No lubrication needed, if applied it shall be continuous
Max working pressure (bar)	10
Temperature °C	-5 ÷ +70
Flow rate at 6 bar with Δp=1 (Nl/min)	6500
Orifice size (mm)	20
Working ports size	G1"

	TYPE
Ⓣ	**32** = 3 ways
	52 = 5 ways

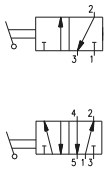

3 ways

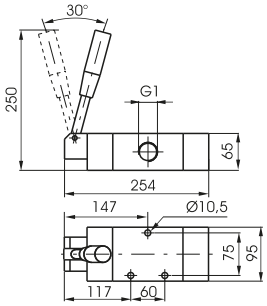

Weight 4300 g

211.32.9

5 ways

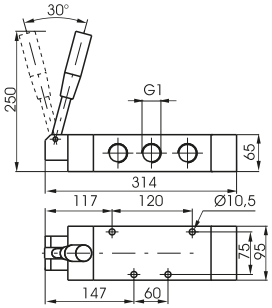

Weight 4900 g

211.52.9

Lever lateral spring centre 3 positions

Coding: 211.53.Ⓕ.9.1

Operational characteristics	
Fluid	Filtered air. No lubrication needed, if applied it shall be continuous
Max working pressure (bar)	10
Temperature °C	-5 ÷ +70
Flow rate at 6 bar with Δp=1 (Nl/min)	6500
Orifice size (mm)	20
Working ports size	G1"

	FUNCTION
Ⓕ	**31** = Closed centres
	32 = Open centres

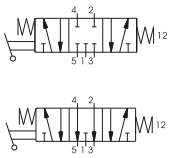

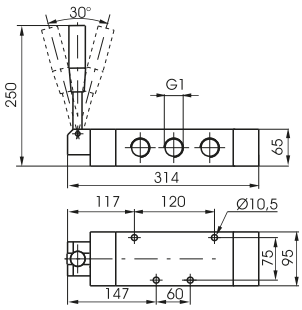

Weight 5000 g

Overall dimensions and technical information are provided solely for informative purposes and may be modified without notice

Lever lateral 3 positions detent

Coding: 211.53.Ⓕ.9

Operational characteristics	
Fluid	Filtered air. No lubrication needed, if applied it shall be continuous
Max working pressure (bar)	10
Temperature °C	-5 ÷ +70
Flow rate at 6 bar with Δp=1 (Nl/min)	6500
Orifice size (mm)	20
Working ports size	G1"

	FUNCTION
Ⓕ	**31** = Closed centres
	32 = Open centres

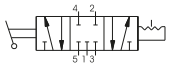

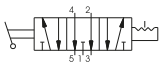

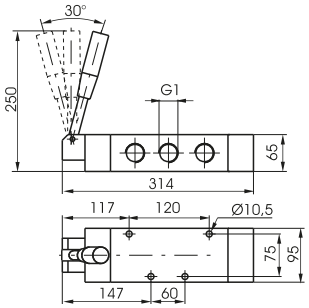

Weight 5000 g

Pneumatic - Spring

Coding: 211.❶.11.1

Operational characteristics	
Fluid	Filtered air. No lubrication needed, if applied it shall be continuous
Max working pressure (bar)	10
Temperature °C	-5 ÷ +70
Flow rate at 6 bar with Δp=1 (Nl/min)	6500
Orifice size (mm)	20
Working ports size	G1"
Pilot ports size	G1/8"

	TYPE
❶	**32** = 3 ways
	52 = 5 ways

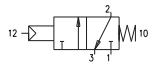

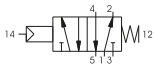

3 ways

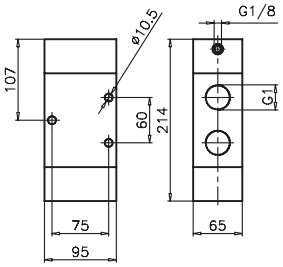

Weight 3330 g
Minimum piloting pressure 2,5 bar

211.32.11.1

5 ways

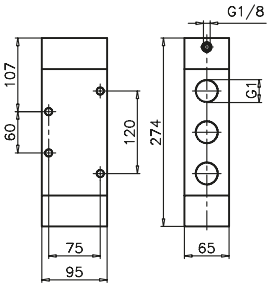

Weight 4200 g
Minimum piloting pressure 2,5 bar

211.52.11.1

Pneumatic - Differential external

Coding: 211.❶.11.12

Operational characteristics	
Fluid	Filtered air. No lubrication needed, if applied it shall be continuous
Max working pressure (bar)	10
Temperature °C	-5 ÷ +70
Flow rate at 6 bar with Δp=1 (Nl/min)	6500
Orifice size (mm)	20
Working ports size	G1"
Pilot ports size	G1/8"

	TYPE
❶	**32** = 3 ways
	52 = 5 ways

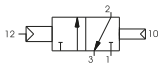

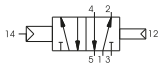

3 ways

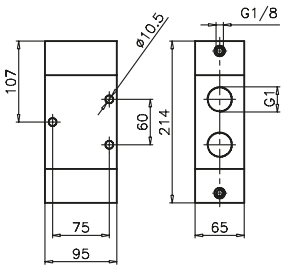

Weight 3330 g
Minimum piloting pressure 2,5 bar

211.32.11.12

5 ways

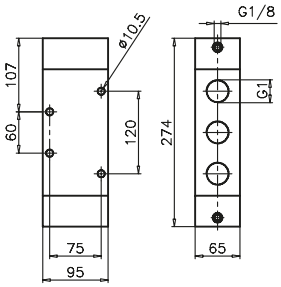

Weight 4200 g
Minimum piloting pressure 2,5 bar

211.52.11.12

Pneumatic - Pneumatic

Coding: 211.❶.11.11

Operational characteristics	
Fluid	Filtered air. No lubrication needed, if applied it shall be continuous
Max working pressure (bar)	10
Temperature °C	-5 ÷ +70
Flow rate at 6 bar with Δp=1 (Nl/min)	6500
Orifice size (mm)	20
Working ports size	G1"
Pilot ports size	G1/8"

	TYPE
❶	**32** = 3 ways
	52 = 5 ways

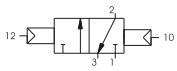

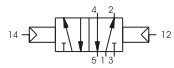

3 ways

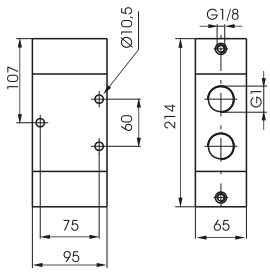

Weight 3330 g
Minimum piloting pressure 2 bar

211.32.11.11

5 ways

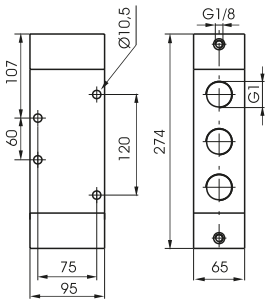

Weight 4200 g
Minimum piloting pressure 2 bar

211.52.11.11

Overall dimensions and technical information are provided solely for informative purposes and may be modified without notice

Pneumatic - Pneumatic 5 ways 3 connections

Coding: 211.53.Ⓕ.11.11

Operational characteristics	
Fluid	Filtered air. No lubrication needed, if applied it shall be continuous
Max working pressure (bar)	10
Temperature °C	-5 ÷ +70
Flow rate at 6 bar with Δp=1 (Nl/min)	6500
Orifice size (mm)	20
Working ports size	G1"
Pilot ports size	G1/8"

	FUNCTION
Ⓕ	**31** = Closed centres
	32 = Open centres
	33 = Pressured centres

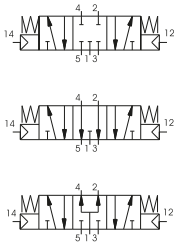

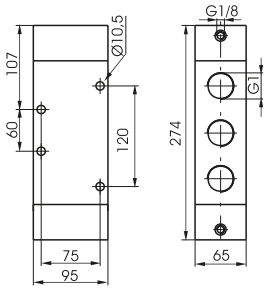

Weight 4200 g
Minimum piloting pressure 3 bar

Series T200

General

The **T200** series, consist of a broad range of valves with various type of actuation. The connections for this series are from G 1/8" to G 1/4".
The main components constituting the valves of the Tecno228 series are manufactured with high performance technopolymer.
The use of technopolymer has resulted in a light weight product which can be offered to the market at very interesting prices.
The **T228** series, is manufactured with 1/8" connections, 3 and 5 ways function, mechanical or pneumatically operated, monostable spring or pneumatic return, bistable and in 5 ways 3 positions version with closed, open and pressured centres.
This series is completely interchangable with the standard 228 series (with alluminium body).
The **T224** valves and solenoid valves series, are manufactured with 1/4" connections. Depending on version and actuation (manual, pneumatic, or electrical), and self aligning (pneu - elect, spring) 3/2, 5/2 and 5/3 ways function, (monostable), (bistable).
The gang mounted solenoid valves are available with the traditional manifold obtained from bored square bar of series 600 and with the extruded aluminium base allowing a unic inlet port conveying the exhausts. The base is also prearranged to be fixed on DIN 46277/3 guide.

Maximum fitting torque

Thread	Maximum torque (Nm)
G 1/8"	4
G1/4"	9

Construction characteristics

	G 1/8" (T228) and G 1/4" (T224)
Body	Technopolymer
Operators	Technopolymer
Seals	NBR
Spacer	Technopolymer
Spools	Technopolymer Stainless steel only for the versions Push button-Spring and Lever lateral
Springs	Spring steel
Pistons	Technopolymer

Use and maintenance

This valves have an average life of 15 million cycles depending on the application and air quality.
Filtered and lubricated air using specified lubricants will reduce the wear of the seals and ensures long and trouble free operation.
Please ensure that the valve is being used according with the manufacturers specification, such as air pressure and temperature.
The exhaust port of the distributor has to be protected in a dusty and dirty environment.
Repair kits including the spool complete with seals are available for overhauling the valves.
However, although this is a simple operation it should be carried out by a competent person.

ATTENTION: use hydraulic oil class H for lubrication such as MAGNA GC 32 (Castrol).

Overall dimensions and technical information are provided solely for informative purposes and may be modified without notice

Tappet - Spring

Coding: T228.Ⓣ.0.1

Operational characteristics	
Fluid	Filtered air. No lubrication needed, if applied it shall be continuous
Max working pressure (bar)	10
Temperature °C	-5 ÷ +50
Flow rate at 6 bar with Δp=1 (Nl/min)	620
Orifice size (mm)	6
Working ports size	G1/8"

	TYPE
Ⓣ	**32** = 3 ways
	52 = 5 ways

Operating force 33 N

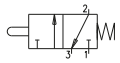

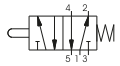

3 ways

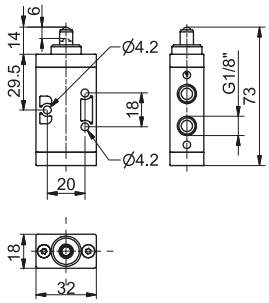

Weight 60 g

T228.32.0.1

5 ways

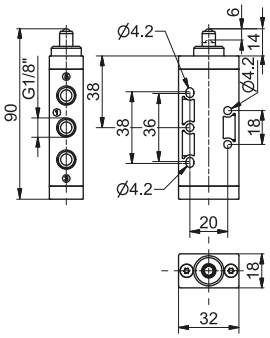

Weight 72 g

T228.52.0.1

Tappet panel - Spring

Coding: T228.Ⓣ.1.1

Operational characteristics	
Fluid	Filtered air. No lubrication needed, if applied it shall be continuous
Max working pressure (bar)	10
Temperature °C	-5 ÷ +50
Flow rate at 6 bar with Δp=1 (Nl/min)	620
Orifice size (mm)	6
Working ports size	G1/8"

	TYPE
Ⓣ	**32** = 3 ways
	52 = 5 ways

Operating force 33 N

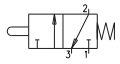

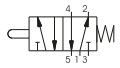

3 ways

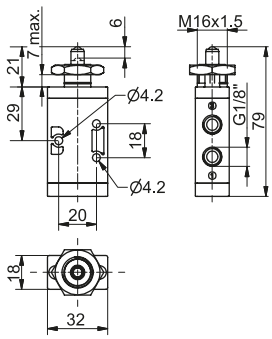

Weight 77 g

T228.32.1.1

5 ways

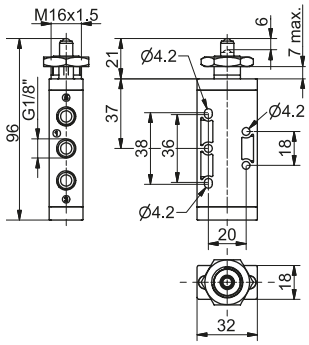

Weight 90 g

T228.52.1.1

Lever roller

Coding: T228.Ⓣ.2.Ⓥ

Operational characteristics	
Fluid	Filtered air. No lubrication needed, if applied it shall be continuous
Max working pressure (bar)	10
Temperature °C	-5 ÷ +50
Flow rate at 6 bar with Δp=1 (Nl/min)	620
Orifice size (mm)	6
Working ports size	G1/8"

	TYPE
Ⓣ	**32** = 3 ways
	52 = 5 ways
	VERSION
Ⓥ	**1** = Plastic roller
	1/1 = ball bearing
	1/2 = Metal roller

Operating force 15 N

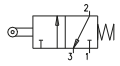

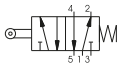

3 ways

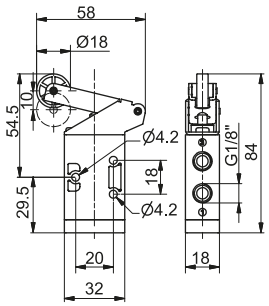

Weight 90 g

T228.32.2.Ⓥ

5 ways

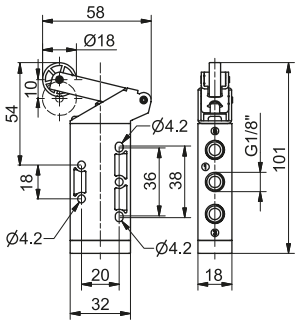

Weight 102 g

T228.52.2.Ⓥ

Lever roller ball bearing - Spring

Coding: T228.Ⓣ.2.1/1

Operational characteristics	
Fluid	Filtered air. No lubrication needed, if applied it shall be continuous
Max working pressure (bar)	10
Temperature °C	-5 ÷ +50
Flow rate at 6 bar with Δp=1 (Nl/min)	620
Orifice size (mm)	6
Working ports size	G1/8"

Ⓣ	TYPE
	32 = 3 ways
	52 = 5 ways

Operating force 15 N

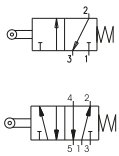

3 ways

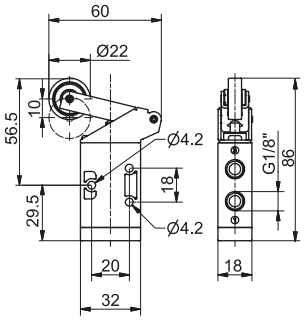

Weight 105 g

T228.32.2.1/1

5 ways

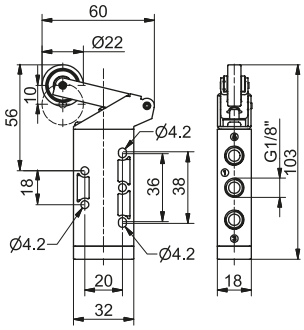

Weight 117 g

T228.52.2.1/1

Lever button - Spring

Coding: T228.Ⓣ.2.6/Ⓒ

Operational characteristics	
Fluid	Filtered air. No lubrication needed, if applied it shall be continuous
Max working pressure (bar)	10
Temperature °C	-5 ÷ +50
Flow rate at 6 bar with Δp=1 (Nl/min)	620
Orifice size (mm)	6
Working ports size	G1/8"

Ⓣ	TYPE
	32 = 3 ways
	52 = 5 ways
Ⓒ	LEVER COLOR
	1 = Red
	2 = Black
	3 = Green

Operating force 15 N

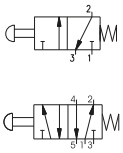

3 ways

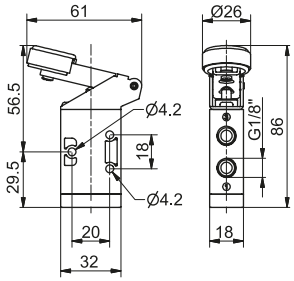

Weight 95 g

T228.32.2.6/Ⓒ

5 ways

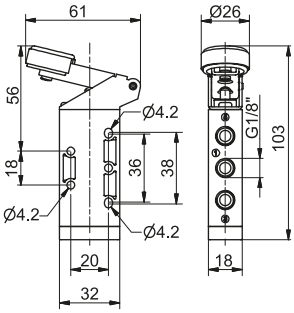

Weight 87 g

T228.52.2.6/Ⓒ

Lever roller unidirectional - Spring

Coding: T228.Ⓣ.3.Ⓥ

Operational characteristics	
Fluid	Filtered air. No lubrication needed, if applied it shall be continuous
Max working pressure (bar)	10
Temperature °C	-5 ÷ +50
Flow rate at 6 bar with Δp=1 (Nl/min)	620
Orifice size (mm)	6
Working ports size	G1/8"

Ⓣ	TYPE
	32 = 3 ways
	52 = 5 ways
Ⓥ	VERSION
	1 = Plastic roller
	1/2 = Metal roller

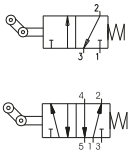

3 ways

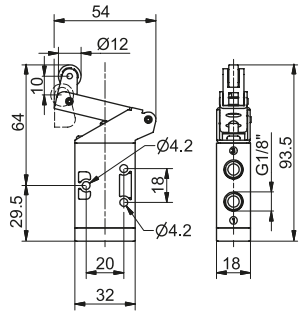

Weight 85 g

T228.32.3.Ⓥ

5 ways

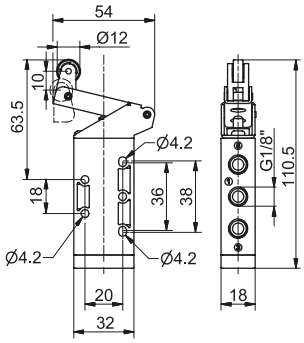

Weight 97 g

T228.52.3.Ⓥ

Overall dimensions and technical information are provided solely for informative purposes and may be modified without notice

Lever panel Ø30 - 2 positions

Coding: T228.❶.5/❷

Operational characteristics	
Fluid	Filtered air. No lubrication needed, if applied it shall be continuous
Max working pressure (bar)	10
Temperature °C	-5 ÷ +50
Flow rate at 6 bar with Δp=1 (Nl/min)	620
Orifice size (mm)	6
Working ports size	G1/8"

❶	TYPE
	32 = 3 ways
	52 = 5 ways
❷	LEVER COLOR
	1 = Red
	2 = Black
	3 = Green

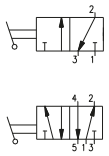

3 ways

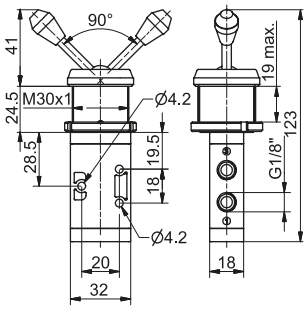

Weight 168 g

T228.32.5/❷

5 ways

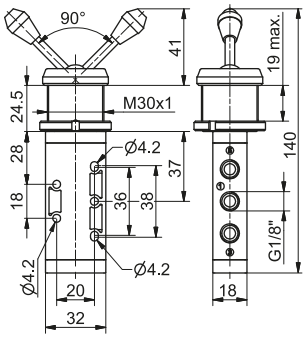

Weight 180 g

T228.52.5/❷

Lever lateral 2 positions

Coding: T228.❶.55/❷

Operational characteristics	
Fluid	Filtered air. No lubrication needed, if applied it shall be continuous
Max working pressure (bar)	10
Temperature °C	-5 ÷ +50
Flow rate at 6 bar with Δp=1 (Nl/min)	620
Orifice size (mm)	6
Working ports size	G1/8"

❶	TYPE
	32 = 3 ways
	52 = 5 ways
❷	LEVER COLOR
	1 = Red
	2 = Black
	3 = Green

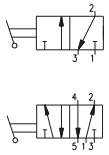

3 ways

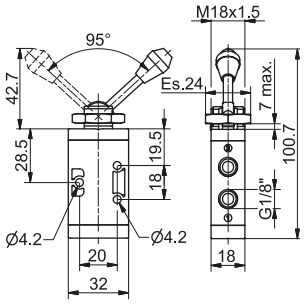

Weight 84 g

T228.32.55/❷

5 ways

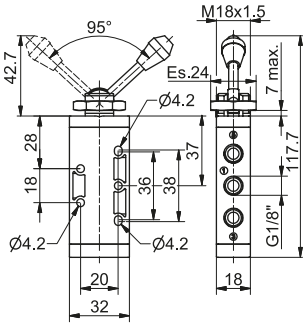

Weight 96 g

T228.52.55/❷

Push button Ø 30 - spring

Coding: T228.❶.6.1/❷

Operational characteristics	
Fluid	Filtered air. No lubrication needed, if applied it shall be continuous
Max working pressure (bar)	10
Temperature °C	-5 ÷ +50
Flow rate at 6 bar with Δp=1 (Nl/min)	620
Orifice size (mm)	6
Working ports size	G1/8"

❶	TYPE
	32 = 3 ways
	52 = 5 ways
❷	BUTTON COLOR
	1 = Red
	2 = Black
	3 = Green

Operating force 33 N

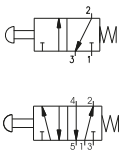

3 ways

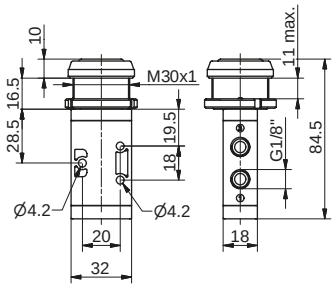

Weight 125 g

T228.32.6.1/❷

5 ways

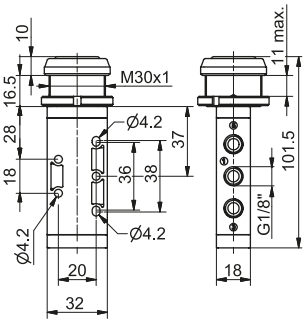

Weight 137 g

T228.52.6.1/❷

Push button - Spring

Coding: T228.Ⓣ.6.22/Ⓒ

Operational characteristics	
Fluid	Filtered air. No lubrication needed, if applied it shall be continuous
Max working pressure (bar)	10
Temperature °C	-5 ÷ +50
Flow rate at 6 bar with Δp=1 (Nl/min)	620
Orifice size (mm)	6
Working ports size	G1/8"

Ⓣ	TYPE
	32 = 3 ways
	52 = 5 ways
Ⓒ	BUTTON COLOR
	1 = Red
	2 = Black
	3 = Green
	4 = Yellow

Operating force 33 N

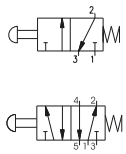

3 ways

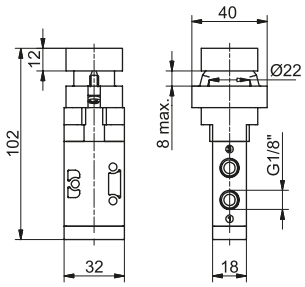

Weight 200 g

T228.32.6.22/Ⓒ

5 ways

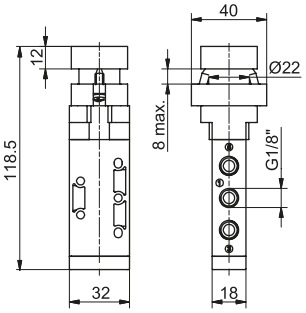

Weight 212 g

T228.52.6.22/Ⓒ

Raised push button Ø22 - Spring

Coding: T228.Ⓣ.6.23/Ⓒ

Operational characteristics	
Fluid	Filtered air. No lubrication needed, if applied it shall be continuous
Max working pressure (bar)	10
Temperature °C	-5 ÷ +50
Flow rate at 6 bar with Δp=1 (Nl/min)	620
Orifice size (mm)	6
Working ports size	G1/8"

Ⓣ	TYPE
	32 = 3 ways
	52 = 5 ways
Ⓒ	BUTTON COLOR
	1 = Red
	2 = Black
	3 = Green
	4 = Yellow

Operating force 33 N

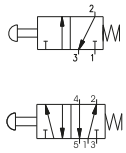

3 ways

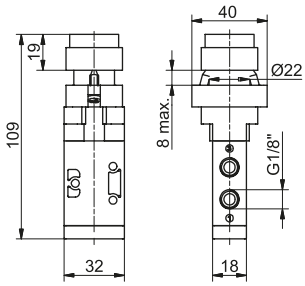

Weight 205 g

T228.32.6.23/Ⓒ

5 ways

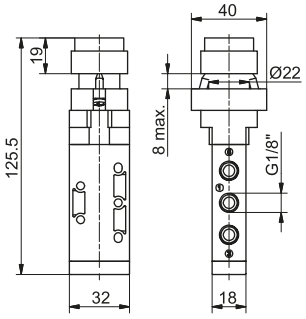

Weight 217 g

T228.52.6.23/Ⓒ

Push button Ø22 - 2 positions

Coding: T228.Ⓣ.6.25

Operational characteristics	
Fluid	Filtered air. No lubrication needed, if applied it shall be continuous
Max working pressure (bar)	10
Temperature °C	-5 ÷ +50
Flow rate at 6 bar with Δp=1 (Nl/min)	620
Orifice size (mm)	6
Working ports size	G1/8"

Ⓣ	TYPE
	32 = 3 ways
	52 = 5 ways

Operating force 33 N

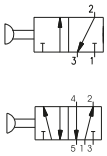

3 ways

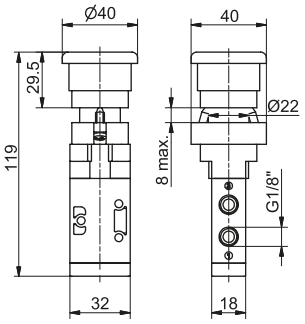

Weight 210 g

T228.32.6.25

5 ways

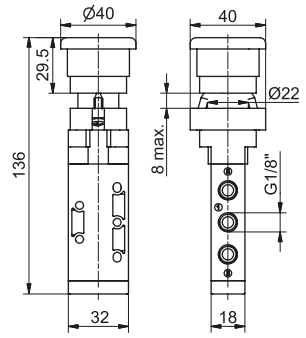

Weight 202 g

T228.52.6.25

Overall dimensions and technical information are provided solely for informative purposes and may be modified without notice

Switch 2 positions

Coding: T228.Ⓣ.6.27

Operational characteristics	
Fluid	Filtered air. No lubrication needed, if applied it shall be continuous
Max working pressure (bar)	10
Temperature °C	-5 ÷ +50
Flow rate at 6 bar with Δp=1 (Nl/min)	620
Orifice size (mm)	6
Working ports size	G1/8"

	TYPE
Ⓣ	**32** = 3 ways
	52 = 5 ways

Operating force 33 N

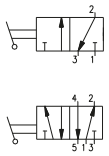

3 ways

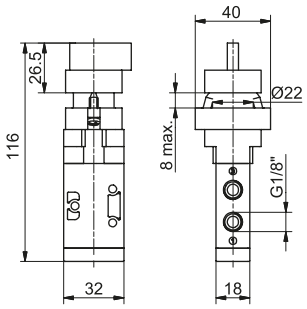

Weight 205 g

T228.32.6.27

5 ways

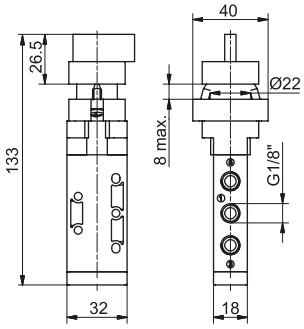

Weight 217 g

T228.52.6.27

Key switch 2 positions

Coding: T228.Ⓣ.6.28

Operational characteristics	
Fluid	Filtered air. No lubrication needed, if applied it shall be continuous
Max working pressure (bar)	10
Temperature °C	-5 ÷ +50
Flow rate at 6 bar with Δp=1 (Nl/min)	620
Orifice size (mm)	6
Working ports size	G1/8"

	TYPE
Ⓣ	**32** = 3 ways
	52 = 5 ways

Operating force 33 N

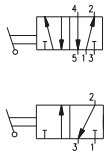

5 ways

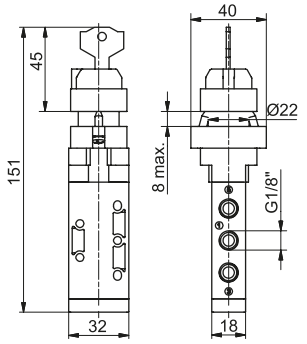

Weight 217 g

T228.52.6.28

3 ways

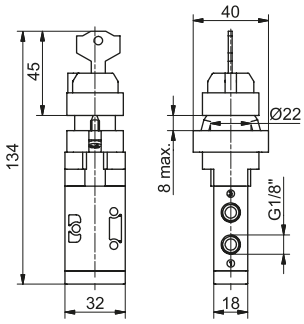

Weight 205 g

T228.32.6.28

Palm push button Ø30 2 positions

Coding: T228.Ⓣ.7.1/Ⓒ

Operational characteristics	
Fluid	Filtered air. No lubrication needed, if applied it shall be continuous
Max working pressure (bar)	10
Temperature °C	-5 ÷ +50
Flow rate at 6 bar with Δp=1 (Nl/min)	620
Orifice size (mm)	6
Working ports size	G1/8"

	TYPE
Ⓣ	**32** = 3 ways
	52 = 5 ways
	BUTTON COLOR
Ⓒ	**1** = Red
	2 = Black
	3 = Green

Operating force 33 N

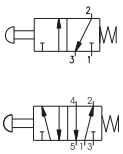

3 ways

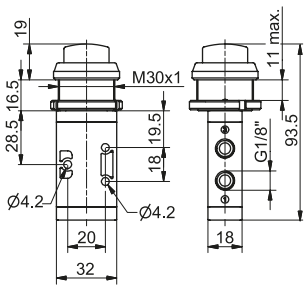

Weight 118 g

T228.32.7.1/Ⓒ

5 ways

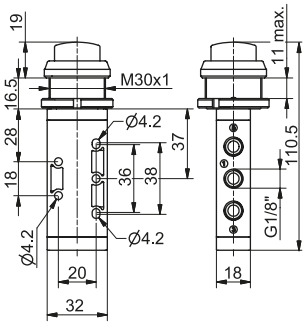

Weight 130 g

T228.52.7.1/Ⓒ

Push button - Spring

Coding: T228.Ⓣ.8.1/Ⓒ

Operational characteristics	
Fluid	Filtered air. No lubrication needed, if applied it shall be continuous
Max working pressure (bar)	10
Temperature °C	-5 ÷ +50
Flow rate at 6 bar with Δp=1 (Nl/min)	620
Orifice size (mm)	6
Working ports size	G1/8"

Ⓣ	TYPE
	32 = 3 ways
	52 = 5 ways
Ⓒ	BUTTON COLOR
	1 = Red
	2 = Black
	3 = Green

Operating force 33 N

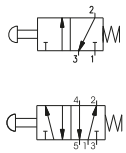

3 ways

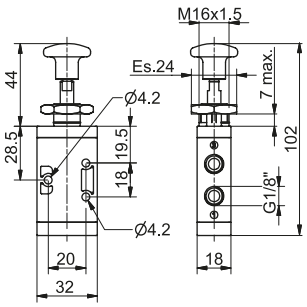

Weight 95 g

T228.32.8.1/Ⓒ

5 ways

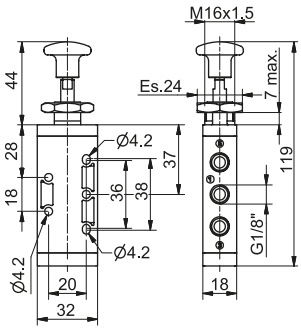

Weight 107 g

T228.52.8.1/Ⓒ

Push button 2 positions

Coding: T228.Ⓣ.8/Ⓒ

Operational characteristics	
Fluid	Filtered air. No lubrication needed, if applied it shall be continuous
Max working pressure (bar)	10
Temperature °C	-5 ÷ +50
Flow rate at 6 bar with Δp=1 (Nl/min)	620
Orifice size (mm)	6
Working ports size	G1/8"

Ⓣ	TYPE
	32 = 3 ways
	52 = 5 ways
Ⓒ	BUTTON COLOR
	1 = Red
	2 = Black
	3 = Green

Operating force 10 N

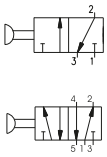

3 ways

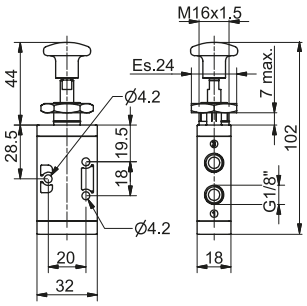

Weight 95 g

T228.32.8/Ⓒ

5 ways

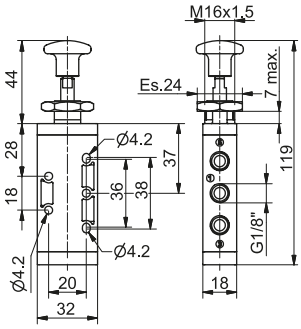

Weight 107 g

T228.52.8/Ⓒ

Lever lateral - Spring

Coding: T228.Ⓣ.9.1/Ⓒ

Operational characteristics	
Fluid	Filtered air. No lubrication needed, if applied it shall be continuous
Max working pressure (bar)	10
Temperature °C	-5 ÷ +50
Flow rate at 6 bar with Δp=1 (Nl/min)	620
Orifice size (mm)	6
Working ports size	G1/8"

Ⓣ	TYPE
	32 = 3 ways
	52 = 5 ways
Ⓒ	LEVER COLOR
	1 = Red
	2 = Black
	3 = Green

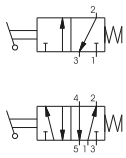

3 ways

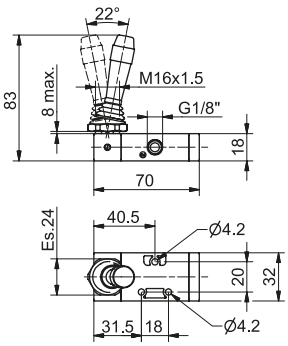

Weight 100 g

T228.32.9.1/Ⓒ

5 ways

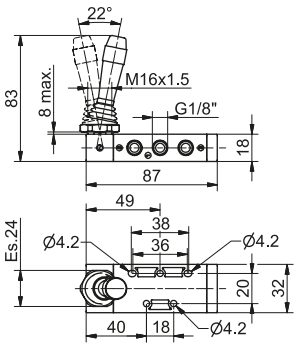

Weight 110 g

T228.52.9.1/Ⓒ

Overall dimensions and technical information are provided solely for informative purposes and may be modified without notice

Lever lateral 2 positions

Coding: T228.Ⓣ.9/Ⓒ

Operational characteristics	
Fluid	Filtered air. No lubrication needed, if applied it shall be continuous
Max working pressure (bar)	10
Temperature °C	-5 ÷ +50
Flow rate at 6 bar with Δp=1 (Nl/min)	620
Orifice size (mm)	6
Working ports size	G1/8"

Ⓣ	TYPE
	32 = 3 ways
	52 = 5 ways
Ⓒ	LEVER COLOR
	1 = Red
	2 = Black
	3 = Green

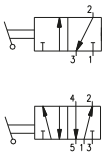

3 ways

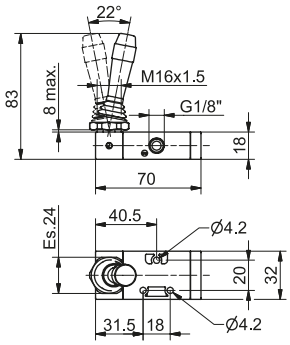

Weight 100 g

T228.32.9/Ⓒ

5 ways

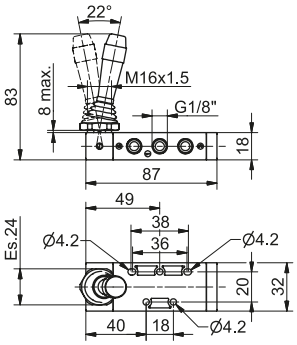

Weight 110 g

T228.52.9/Ⓒ

Lever lateral - Spring 3 positions

Coding: T228.53.Ⓕ.9.1.Ⓒ

Operational characteristics	
Fluid	Filtered air. No lubrication needed, if applied it shall be continuous
Max working pressure (bar)	10
Temperature °C	-5 ÷ +50
Flow rate at 6 bar with Δp=1 (Nl/min)	410
Orifice size (mm)	6
Working ports size	G1/8"

Ⓕ	FUNCTION
	31 = Closed centres
	32 = Open centres
Ⓒ	LEVER COLOR
	1 = Red
	2 = Black
	3 = Green

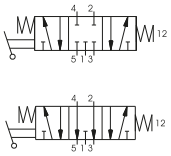

Weight 140 g

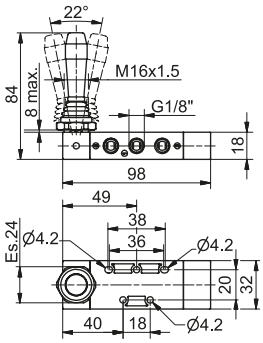

Lever lateral - Spring 3 positions detent

Coding: T228.53.Ⓕ.9/Ⓒ

Operational characteristics	
Fluid	Filtered air. No lubrication needed, if applied it shall be continuous
Max working pressure (bar)	10
Temperature °C	-5 ÷ +70
Flow rate at 6 bar with Δp=1 (Nl/min)	410
Orifice size (mm)	6
Working ports size	G1/8"

Ⓕ	FUNCTION
	31 = Closed centres
	32 = Open centres
Ⓒ	LEVER COLOR
	1 = Red
	2 = Black
	3 = Green

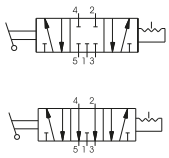

Weight 110 g

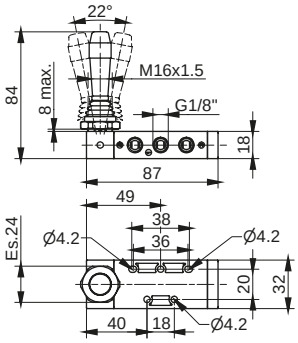

Pneumatic - Spring

Coding: T228.Ⓣ.11.1

Operational characteristics	
Fluid	Filtered air. No lubrication needed, if applied it shall be continuous
Max working pressure (bar)	10
Temperature °C	-5 ÷ +50
Flow rate at 6 bar with Δp=1 (Nl/min)	620
Orifice size (mm)	6
Working ports size	G1/8"
Pilot ports size	G1/8"

Ⓣ	TYPE
	32 = 3 ways
	52 = 5 ways

Minimum piloting pressure 2,5 bar

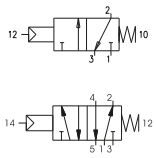

3 ways

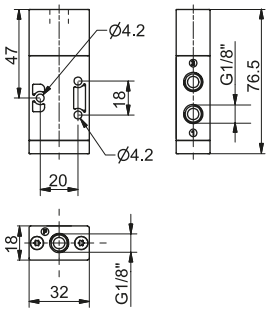

Weight 65 g

T228.32.11.1

5 ways

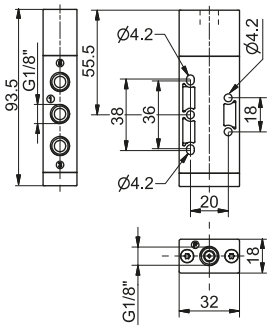

Weight 78 g

T228.52.11.1

Pneumatic - Differential external

Coding: T228.Ⓣ.11.12

Operational characteristics	
Fluid	Filtered air. No lubrication needed, if applied it shall be continuous
Max working pressure (bar)	10
Temperature °C	-5 ÷ +50
Flow rate at 6 bar with Δp=1 (Nl/min)	620
Orifice size (mm)	6
Working ports size	G1/8"
Pilot ports size	G1/8"

Ⓣ	TYPE
	32 = 3 ways
	52 = 5 ways

Minimum piloting pressure 2,5 bar

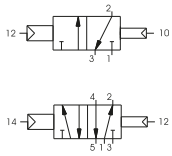

3 ways

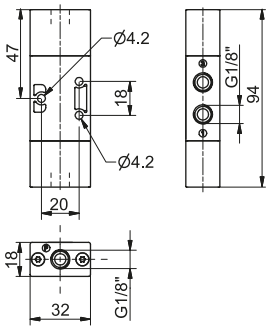

Weight 74 g

T228.32.11.12

5 ways

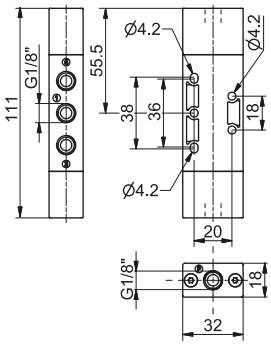

Weight 86 g

T228.52.11.12

Pneumatic - Differential self aligned

Coding: T228.Ⓣ.11.12/1

Operational characteristics	
Fluid	Filtered air. No lubrication needed, if applied it shall be continuous
Max working pressure (bar)	10
Temperature °C	-5 ÷ +50
Flow rate at 6 bar with Δp=1 (Nl/min)	620
Orifice size (mm)	6
Working ports size	G1/8"
Pilot ports size	G1/8"

Ⓣ	TYPE
	32 = 3 ways
	52 = 5 ways

Minimum piloting pressure 2,5 bar

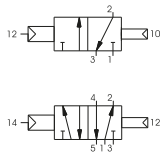

3 ways

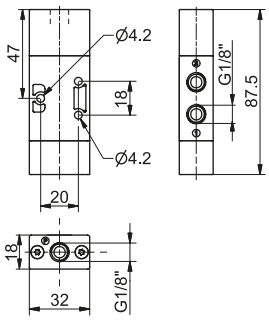

Weight 70 g

T228.32.11.12/1

5 ways

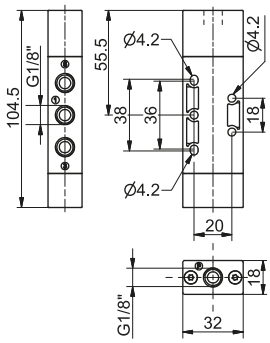

Weight 82 g

T228.52.11.12/1

Overall dimensions and technical information are provided solely for informative purposes and may be modified without notice

Pneumatic - Pneumatic

Coding: T228.Ⓣ.11.11

Operational characteristics	
Fluid	Filtered air. No lubrication needed, if applied it shall be continuous
Max working pressure (bar)	10
Temperature °C	-5 ÷ +50
Flow rate at 6 bar with Δp=1 (Nl/min)	620
Orifice size (mm)	6
Working ports size	G1/8"
Pilot ports size	G1/8"

Ⓣ	TYPE
	32 = 3 ways
	52 = 5 ways

Minimum piloting pressure 2 bar

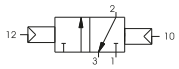

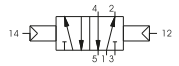

3 ways

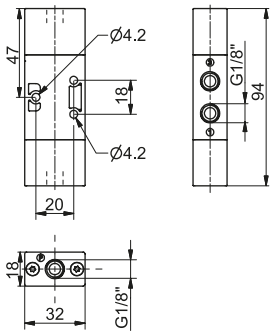

Weight 77 g

T228.32.11.11

5 ways

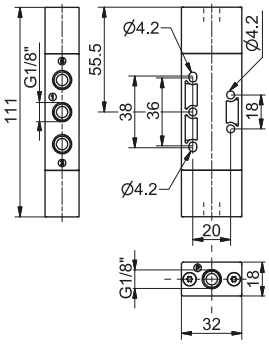

Weight 90 g

T228.52.11.11

Pneumatic - Pneumatic 3 positions

Coding: T228.53.Ⓕ.11.11

Operational characteristics	
Fluid	Filtered air. No lubrication needed, if applied it shall be continuous
Max working pressure (bar)	10
Temperature °C	-5 ÷ +50
Flow rate at 6 bar with Δp=1 (Nl/min)	410
Orifice size (mm)	6
Working ports size	G1/8"
Pilot ports size	G1/8"

Ⓕ	FUNCTION
	31 = Closed centres
	32 = Open centres
	33 = Pressured centres

Minimum piloting pressure 3 bar

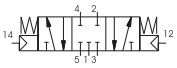

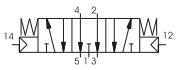

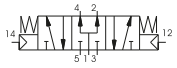

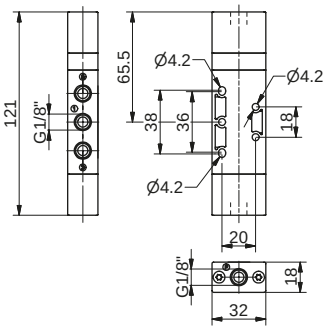

Weight 110 g

Push button - Spring

Coding: T224.Ⓣ.8.1

Operational characteristics	
Fluid	Filtered air. No lubrication needed, if applied it shall be continuous
Max working pressure (bar)	10
Temperature °C	-5 ÷ +50
Flow rate at 6 bar with Δp=1 (Nl/min)	1050
Orifice size (mm)	8.5
Working ports size	G1/4"

Ⓣ	TYPE
	32 = 3 ways
	52 = 5 ways

Operating force 50 N

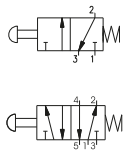

3 ways

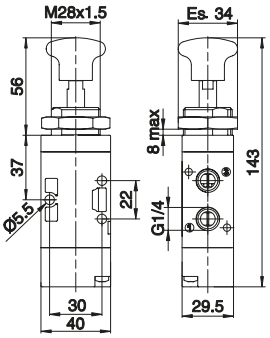

Weight 170 g

T224.32.8.1

5 ways

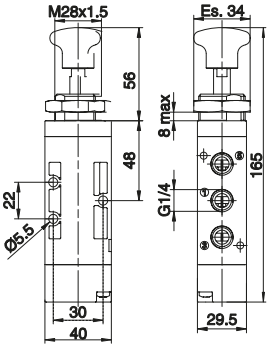

Weight 200 g

T224.52.8.1

Push button 2 positions

Coding: T224.Ⓣ.8

Operational characteristics	
Fluid	Filtered air. No lubrication needed, if applied it shall be continuous
Max working pressure (bar)	10
Temperature °C	-5 ÷ +50
Flow rate at 6 bar with Δp=1 (Nl/min)	1050
Orifice size (mm)	8.5
Working ports size	G1/4"

Ⓣ	TYPE
	32 = 3 ways
	52 = 5 ways

Operating force 13 N

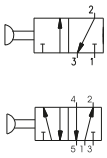

3 ways

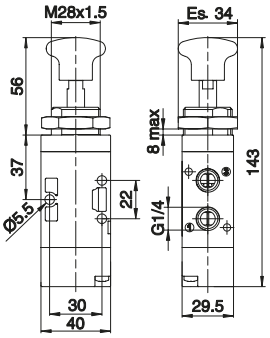

Weight 170 g

T224.32.8

5 ways

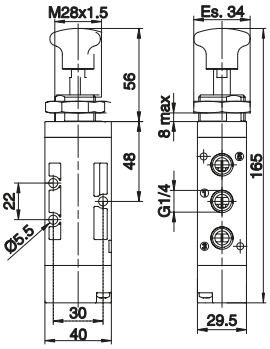

Weight 200 g

T224.52.8

Lever lateral - Spring

Coding: T224.Ⓣ.9.1/Ⓒ

Operational characteristics	
Fluid	Filtered air. No lubrication needed, if applied it shall be continuous
Max working pressure (bar)	10
Temperature °C	-5 ÷ +50
Flow rate at 6 bar with Δp=1 (Nl/min)	1050
Orifice size (mm)	8.5
Working ports size	G1/4"

Ⓣ	TYPE
	32 = 3 ways
	52 = 5 ways
Ⓒ	LEVER COLOR
	1 = Red
	2 = Black
	3 = Green

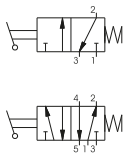

3 ways

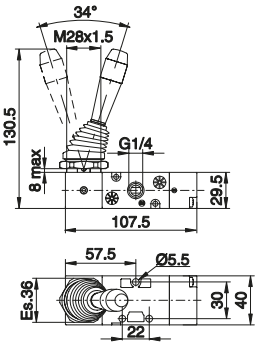

Weight 220 g

T224.32.9.1/Ⓒ

5 ways

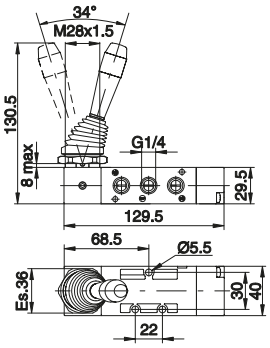

Weight 250 g

T224.52.9.1/Ⓒ

Overall dimensions and technical information are provided solely for informative purposes and may be modified without notice

Lever lateral 2 positions

Coding: T224.Ⓣ.9/Ⓒ

Operational characteristics	
Fluid	Filtered air. No lubrication needed, if applied it shall be continuous
Max working pressure (bar)	10
Temperature °C	-5 ÷ +50
Flow rate at 6 bar with Δp=1 (Nl/min)	1050
Orifice size (mm)	8.5
Working ports size	G1/4"

Ⓣ	TYPE
	32 = 3 ways
	52 = 5 ways
Ⓒ	LEVER COLOR
	1 = Red
	2 = Black
	3 = Green

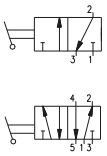

3 ways

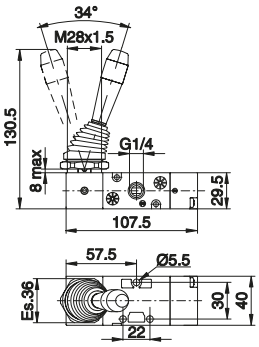

Weight 220 g

T224.32.9/Ⓒ

5 ways

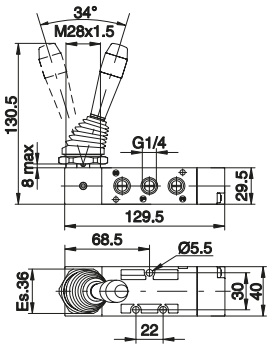

Weight 250 g

T224.52.9/Ⓒ

Lever lateral 3 positions

Coding: T224.53.Ⓕ9.1/Ⓒ

Operational characteristics	
Fluid	Filtered air. No lubrication needed, if applied it shall be continuous
Max working pressure (bar)	10
Temperature °C	-5 ÷ +50
Flow rate at 6 bar with Δp=1 (Nl/min)	900
Orifice size (mm)	8.5
Working ports size	G1/4"

Ⓕ	FUNCTION
	31 = Closed centres
	32 = Open centres
	33 = Pressured centres
Ⓒ	LEVER COLOR
	1 = Red
	2 = Black
	3 = Green

Weight 270 g

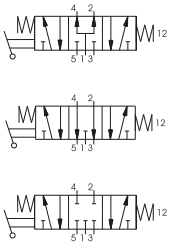

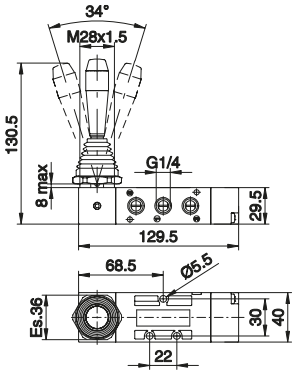

Lateral lever - 3 positions detent

Coding: T224.53.Ⓕ.9/Ⓒ

Operational characteristics	
Fluid	Filtered air. No lubrication needed, if applied it shall be continuous
Max working pressure (bar)	10
Temperature °C	-5 ÷ +50
Flow rate at 6 bar with Δp=1 (Nl/min)	900
Orifice size (mm)	8.5
Working ports size	G1/4"

Ⓕ	FUNCTION
	31 = Closed centres
	32 = Open centres
	33 = Pressured centres
Ⓒ	LEVER COLOR
	1 = Red
	2 = Black
	3 = Green

Weight 270 g

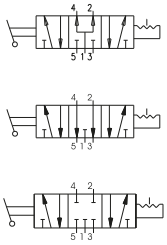

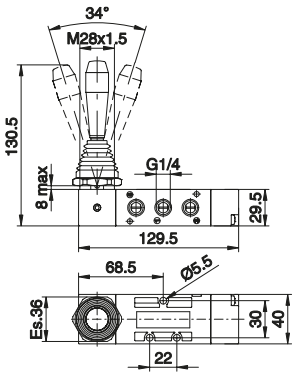

Pneumatic - Spring

Coding: T224.Ⓣ.11.1

Operational characteristics	
Fluid	Filtered air. No lubrication needed, if applied it shall be continuous
Max working pressure (bar)	10
Temperature °C	-5 ÷ +50
Flow rate at 6 bar with Δp=1 (Nl/min)	1050
Orifice size (mm)	8.5
Working ports size	G1/4"
Pilot ports size	G1/8"

Ⓣ	TYPE
	32 = 3 ways
	52 = 5 ways

Minimum piloting pressure 2,5 bar

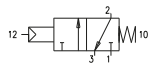

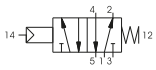

3 ways

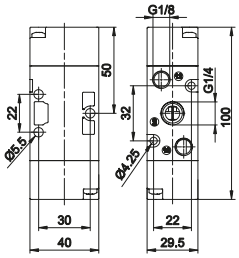

Weight 110 g

T224.32.11.1

5 ways

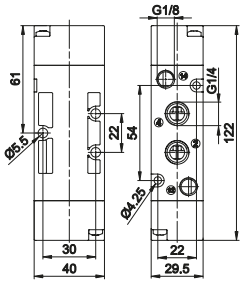

Weight 140 g

T224.52.11.1

Pneumatic - Differential external

Coding: T224.Ⓣ.11.12

Operational characteristics	
Fluid	Filtered air. No lubrication needed, if applied it shall be continuous
Max working pressure (bar)	10
Temperature °C	-5 ÷ +50
Flow rate at 6 bar with Δp=1 (Nl/min)	1050
Orifice size (mm)	8.5
Working ports size	G1/4"
Pilot ports size	G1/8"

Ⓣ	TYPE
	32 = 3 ways
	52 = 5 ways

Minimum piloting pressure 2 bar

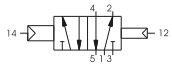

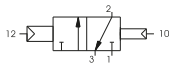

3 ways

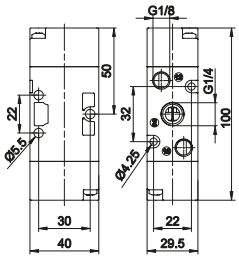

Weight 110 g

T224.32.11.12

5 ways

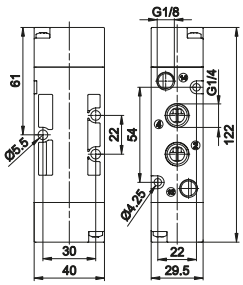

Weight 140 g

T224.52.11.12

Pneumatic - Pneumatic

Coding: T224.Ⓣ.11.11

Operational characteristics	
Fluid	Filtered air. No lubrication needed, if applied it shall be continuous
Max working pressure (bar)	10
Temperature °C	-5 ÷ +50
Flow rate at 6 bar with Δp=1 (Nl/min)	1050
Orifice size (mm)	8.5
Working ports size	G1/4"
Pilot ports size	G1/8"

Ⓣ	TYPE
	32 = 3 ways
	52 = 5 ways

Minimum piloting pressure 2 bar

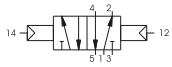

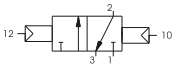

3 ways

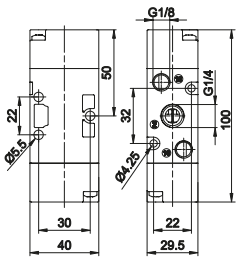

Weight 110 g

T224.32.11.11

5 ways

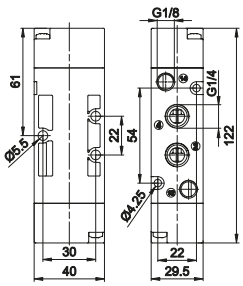

Weight 140 g

T224.52.11.11

Overall dimensions and technical information are provided solely for informative purposes and may be modified without notice

Pneumatic - Pneumatic 5 ways 3 connections

Coding: T224.53.Ⓕ.11.11

Operational characteristics	
Fluid	Filtered air. No lubrication needed, if applied it shall be continuous
Max working pressure (bar)	10
Temperature °C	-5 ÷ +50
Flow rate at 6 bar with Δp=1 (Nl/min)	900
Orifice size (mm)	8.5
Working ports size	G1/4"
Pilot ports size	G1/8"

	FUNCTION
Ⓕ	**31** = Closed centres
	32 = Open centres
	33 = Pressured centres

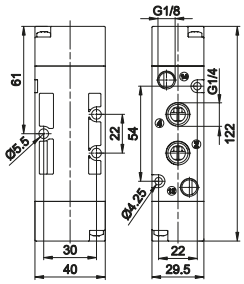

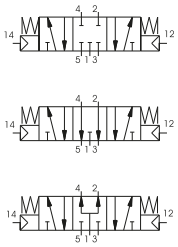

Weight 160 g
Minimum piloting pressure 3 bar

Series 800

General

The trend towards the miniaturization of components has been consolidated. The use of new technologies makes it possible to manufacture components with high flow rates but extremely compact sizes.
Electric piloting is by means of low-absorption miniature solenoids which are easily connected to the electronic control systems of machines (PLC).
Another object of study have been manifolds and multiple bases for ganged assembly of valves or solenoid valves with option for having outlets 2 and 4 either on the valve body or on the base through threaded holes or integrated quick connections provided.
Versions 3/2 and 5/2 are fitted with pneumatic and electropneumatic controls with resetting by mechanically or pneumatically operated spring, or by pneumatic or electropneumatic operation on the bistable versions.
The basic difference between this type of distributors and the others we produce, based on the spool system, lies in the fact that the seals rest on the spool and are dynamic, instead of being locked intoo spool the valve body by means of spacers. By this means a compact size is obtained and the distributors can be slotted into bases and manifolds by means of two screws.

Construction characteristics

Body	Aluminium
Operators	Aluminium
Seals	HNBR
Spools	Aluminium
Springs	Stainless steel
Pistons	Aluminium

Use and maintenance

These valves have an average life of 15 million cycles depending on the application and air quality.
Filtered and lubricated air using specified lubricants will reduce the wear of the seals and ensures long and trouble free operation.
Please ensure that the valve is being used according with the manufacturers specification, such as air pressure and temperature.
The exhaust port of the distributor has to be protected in a dusty and dirty environment.
Repair kits including the spool complete with seals are available for overhauling the valves.
However, although this is a simple operation it should be carried out by a competent person.

ATTENTION: use hydraulic oil class H for lubrication such as MAGNA GC 32 (Castrol).

How to order the solenoid valves

Example:
805.52.0.1.01 Solenoid valves with miniature solenoid 12 V D.C.
List of codes for tensions:

01 = miniature solenoid 12 VDC

02 = miniature solenoid 24 VDC

05 = miniature solenoid 24 VAC

06 = miniature solenoid 110 VAC

07 = miniature solenoid 220 VAC

The electropilot utilized is a 15 mm 3/2 N.C. miniature solenoid with faston and 1.1 mm orifice
Miniature solenoid homologated are available c UL us (see series 300)

Overall dimensions and technical information are provided solely for informative purposes and may be modified without notice

Pneumatic - Spring

Coding: 805.Ⓣ.11.1

Operational characteristics	
Fluid	Filtered air. No lubrication needed, if applied it shall be continuous
Max working pressure (bar)	10
Temperature °C	-5 ÷ +70
Flow rate at 6 bar with Δp=1 (Nl/min)	160
Orifice size (mm)	2.5
Working ports size	M5
Pilot ports size	M5

Ⓣ	TYPE
	32 = 3 ways
	52 = 5 ways

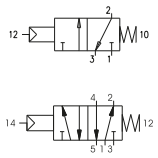

3 ways

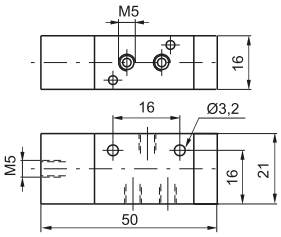

Weight 45 g
Minimum piloting pressure 2 bar

805.32.11.1

5 ways

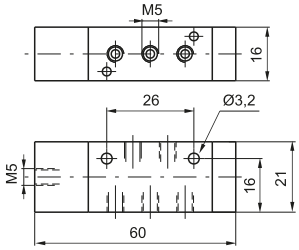

Weight 50 g
Minimum piloting pressure 2 bar

805.52.11.1

Pneumatic - Differential

Coding: 805.Ⓣ.11.12

Operational characteristics	
Fluid	Filtered air. No lubrication needed, if applied it shall be continuous
Max working pressure (bar)	10
Temperature °C	-5 ÷ +70
Flow rate at 6 bar with Δp=1 (Nl/min)	160
Orifice size (mm)	2.5
Working ports size	M5
Pilot ports size	M5

Ⓣ	TYPE
	32 = 3 ways
	52 = 5 ways

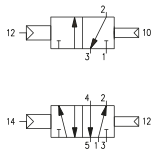

3 ways

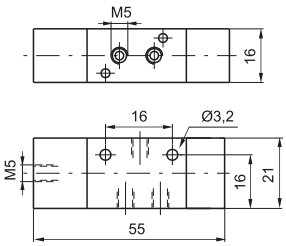

Weight 50 g
Minimum piloting pressure 2 bar

805.32.11.12

5 ways

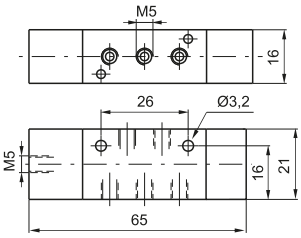

Weight 55 g
Minimum piloting pressure 2 bar

805.52.11.12

Pneumatic - Pneumatic

Coding: 805.Ⓣ.11.11

Operational characteristics	
Fluid	Filtered air. No lubrication needed, if applied it shall be continuous
Max working pressure (bar)	10
Temperature °C	-5 ÷ +70
Flow rate at 6 bar with Δp=1 (Nl/min)	160
Orifice size (mm)	2.5
Working ports size	M5
Pilot ports size	M5

Ⓣ	TYPE
	32 = 3 ways
	52 = 5 ways

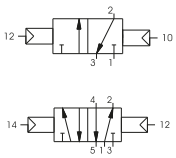

3 ways

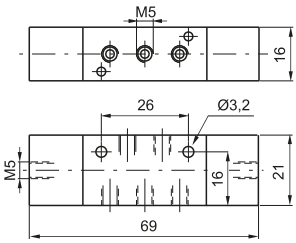

Weight 55 g
Minimum piloting pressure 1,5 bar

805.32.11.11

5 ways 2 connections

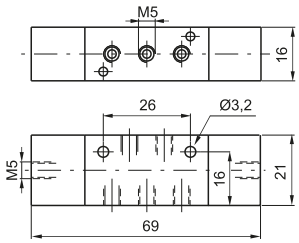

Weight 60 g
Minimum piloting pressure 1,5 bar

805.52.11.11

Solenoid - Spring

Coding: 805.Ⓣ.0.1.Ⓥ

Operational characteristics	
Fluid	Filtered air. No lubrication needed, if applied it shall be continuous
Max working pressure (bar)	10
Temperature °C	-5 ÷ +50
Flow rate at 6 bar with Δp=1 (Nl/min)	160
Orifice size (mm)	2.5
Working ports size	M5

Ⓣ	TYPE
	32 = 3 ways
	52 = 5 ways

Ⓥ	VOLTAGE
	01 = 12V D.C.
	02 = 24V D.C.
	05 = 24V A.C.
	06 = 110V A.C.
	07 = 230 V A.C.

3 ways

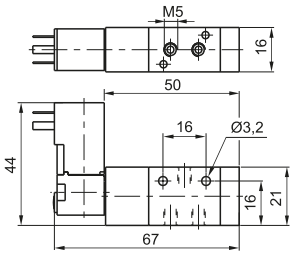

Weight 80 g
Minimum working pressure 2 bar

805.32.0.1.Ⓥ

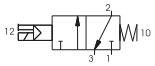

5 ways

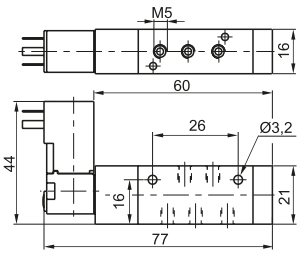

Weight 85 g
Minimum working pressure 2 bar

805.52.0.1.Ⓥ

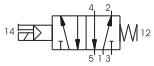

Solenoid - Differential

Coding: 805.Ⓣ.0.12.Ⓥ

Operational characteristics	
Fluid	Filtered air. No lubrication needed, if applied it shall be continuous
Max working pressure (bar)	10
Temperature °C	-5 ÷ +50
Flow rate at 6 bar with Δp=1 (Nl/min)	160
Orifice size (mm)	2.5
Working ports size	M5

Ⓣ	TYPE
	32 = 3 ways
	52 = 5 ways

Ⓥ	VOLTAGE
	01 = 12V D.C.
	02 = 24V D.C.
	05 = 24V A.C.
	06 = 110V A.C.
	07 = 230 V A.C.

3 ways

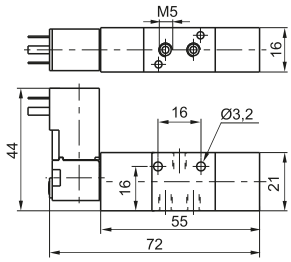

Weight 85 g
Minimum working pressure 2 bar

805.32.0.12.Ⓥ

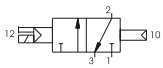

5 ways

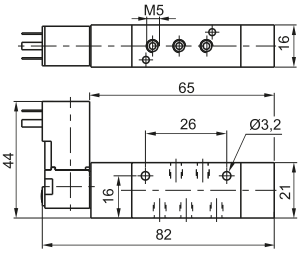

Weight 90 g
Minimum working pressure 2 bar

805.52.0.12.Ⓥ

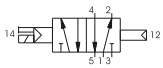

Solenoid - Solenoid

Coding: 805.Ⓣ.0.0.Ⓥ

Operational characteristics	
Fluid	Filtered air. No lubrication needed, if applied it shall be continuous
Max working pressure (bar)	10
Temperature °C	-5 ÷ +50
Flow rate at 6 bar with Δp=1 (Nl/min)	160
Orifice size (mm)	2.5
Working ports size	M5

Ⓣ	TYPE
	32 = 3 ways
	52 = 5 ways

Ⓥ	VOLTAGE
	01 = 12V D.C.
	02 = 24V D.C.
	05 = 24V A.C.
	06 = 110V A.C.
	07 = 230 V A.C.

3 ways

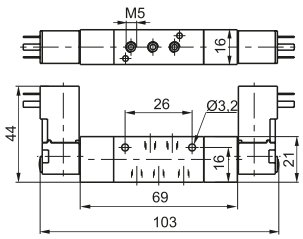

Weight 120 g
Minimum working pressure 1,5 bar

805.32.0.0.Ⓥ

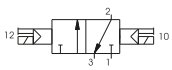

5 ways

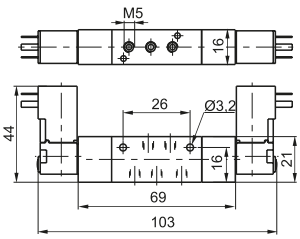

Weight 125 g
Minimum working pressure 1,5 bar

805.52.0.0.Ⓥ

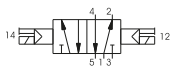

Overall dimensions and technical information are provided solely for informative purposes and may be modified without notice

Collectors

Coding: 805.Ⓝ

	N. POSITIONS
Ⓝ	**02** = 2 positions (weight 95 g)
	03 = 3 positions (weight 130 g)
	04 = 4 positions (weight 160 g)
	05 = 5 positions (weight 190 g)
	06 = 6 positions (weight 225 g)
	07 = 7 positions (weight 260 g)
	08 = 8 positions (weight 290 g)
	09 = 9 positions (weight 325 g)
	10 = 10 positions (weight 365 g)

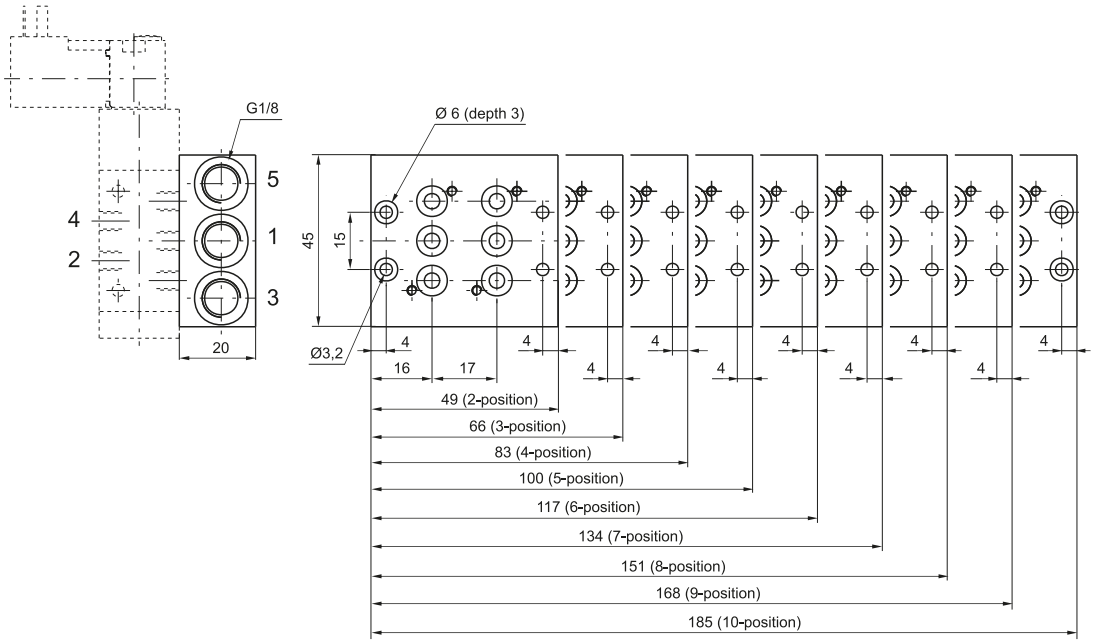

Clip

Coding: 800.00

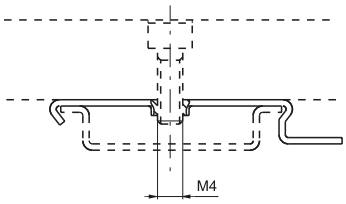

weight 5 g
(for mounting the distributors groups on guide DIN 46277/3)

Closing plate

Coding: 805.00

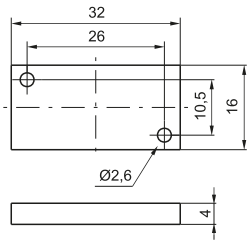

weight 15 g

Pneumatic - Spring

Coding: 808.Ⓣ.11.1

Operational characteristics	
Fluid	Filtered air. No lubrication needed, if applied it shall be continuous
Max working pressure (bar)	10
Temperature °C	-5 ÷ +70
Flow rate at 6 bar with Δp=1 (Nl/min)	520
Orifice size (mm)	4
Working ports size	G1/8"
Pilot ports size	M5

	TYPE
Ⓣ	**32** = 3 ways
	52 = 5 ways

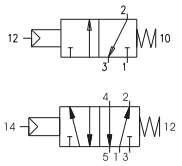

Pneumatic - Spring

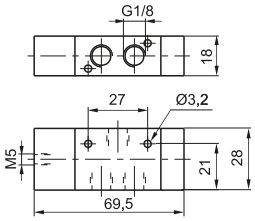

Weight 95 g
Minimum piloting pressure 2 bar

808.32.11.1

Pneumatic - Spring

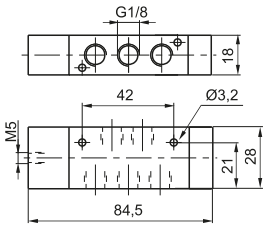

Weight 100 g
Minimum piloting pressure 2 bar

808.52.11.1

Pneumatic - Differential

Coding: 808.Ⓣ.11.12

Operational characteristics	
Fluid	Filtered air. No lubrication needed, if applied it shall be continuous
Max working pressure (bar)	10
Temperature °C	-5 ÷ +70
Flow rate at 6 bar with Δp=1 (Nl/min)	520
Orifice size (mm)	4
Working ports size	G1/8"
Pilot ports size	M5

	TYPE
Ⓣ	**32** = 3 ways
	52 = 5 ways

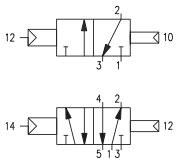

Pneumatic - Differential external

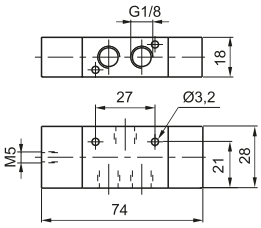

Weight 105 g
Minimum piloting pressure 2 bar

808.32.11.12

Pneumatic - Differential external

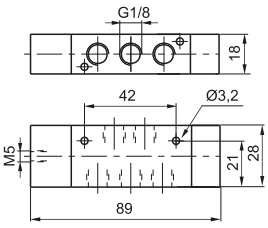

Weight 110 g
Minimum piloting pressure 2 bar

808.52.11.12

Pneumatic - Pneumatic

Coding: 808.Ⓣ.11.11

Operational characteristics	
Fluid	Filtered air. No lubrication needed, if applied it shall be continuous
Max working pressure (bar)	10
Temperature °C	-5 ÷ +70
Flow rate at 6 bar with Δp=1 (Nl/min)	520
Orifice size (mm)	4
Working ports size	G1/8"
Pilot ports size	M5

	TYPE
Ⓣ	**32** = 3 ways
	52 = 5 ways

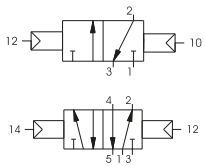

Pneumatic-pneumatic

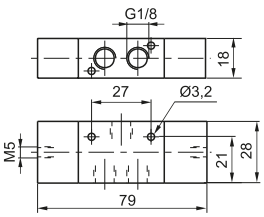

Weight 115 g
Minimum piloting pressure 1,5 bar

808.32.11.11

Pneumatic-pneumatic

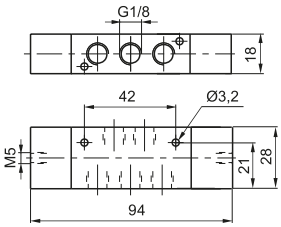

Weight 120 g
Minimum piloting pressure 1,5 bar

808.52.11.11

Overall dimensions and technical information are provided solely for informative purposes and may be modified without notice

Pneumatic - Pneumatic

Coding: 808.53.Ⓣ.11.11

Operational characteristics	
Fluid	Filtered air. No lubrication needed, if applied it shall be continuous
Max working pressure (bar)	10
Temperature °C	-5 ÷ +70
Flow rate at 6 bar with Δp=1 (Nl/min)	520
Orifice size (mm)	4
Working ports size	G 1/8"
Pilot ports size	M5

	TYPE
Ⓣ	**31** = Closed centres
	32 = Open centres

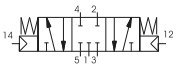

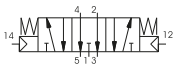

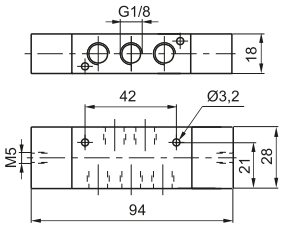

Weight 125 g
Minimum piloting pressure 3 bar

Solenoid - Spring

Coding: 808.Ⓣ.0.1.Ⓥ

Operational characteristics	
Fluid	Filtered air. No lubrication needed, if applied it shall be continuous
Max working pressure (bar)	10
Temperature °C	-5 ÷ +50
Flow rate at 6 bar with Δp=1 (Nl/min)	520
Orifice size (mm)	4
Working ports size	G 1/8"

	TYPE
Ⓣ	**32** = 3 ways
	52 = 5 ways

	VOLTAGE
Ⓥ	**01** = 12V D.C.
	02 = 24V D.C.
	05 = 24V A.C.
	06 = 110V A.C.
	07 = 230 V A.C.

3 ways

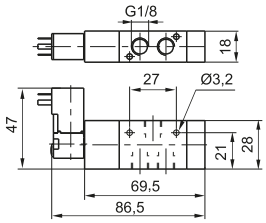

Weight 130 g
Minimum working pressure 2 bar

808.32.0.1.Ⓥ

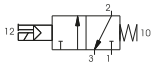

5 ways

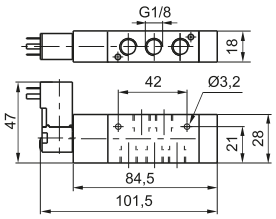

Weight 135 g
Minimum working pressure 2 bar

808.52.0.1.Ⓥ

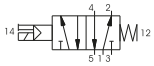

Solenoid - Differential

Coding: 808.Ⓣ.0.12.Ⓥ

Operational characteristics	
Fluid	Filtered air. No lubrication needed, if applied it shall be continuous
Max working pressure (bar)	10
Temperature °C	-5 ÷ +50
Flow rate at 6 bar with Δp=1 (Nl/min)	520
Orifice size (mm)	4
Working ports size	G 1/8"

	TYPE
Ⓣ	**32** = 3 ways
	52 = 5 ways

	VOLTAGE
Ⓥ	**01** = 12V D.C.
	02 = 24V D.C.
	05 = 24V A.C.
	06 = 110V A.C.
	07 = 230 V A.C.

3 ways

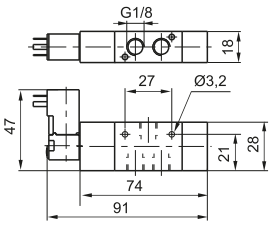

Weight 140 g
Minimum working pressure 2 bar

808.32.0.12.Ⓥ

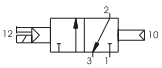

5 ways

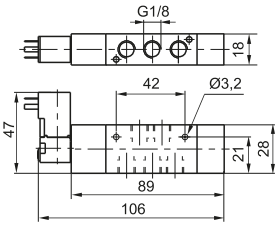

Weight 145 g
Minimum working pressure 2 bar

808.52.0.12.Ⓥ

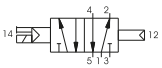

Solenoid - Solenoid

Coding: 808.Ⓣ.0.0.Ⓥ

Operational characteristics	
Fluid	Filtered air. No lubrication needed, if applied it shall be continuous
Max working pressure (bar)	10
Temperature °C	-5 ÷ +50
Flow rate at 6 bar with Δp=1 (Nl/min)	520
Orifice size (mm)	4
Working ports size	G 1/8"

	TYPE
Ⓣ	**32** = 3 ways
	52 = 5 ways

	VOLTAGE
Ⓥ	**01** = 12V D.C.
	02 = 24V D.C.
	05 = 24V A.C.
	06 = 110V A.C.
	07 = 230 V A.C.

3 ways

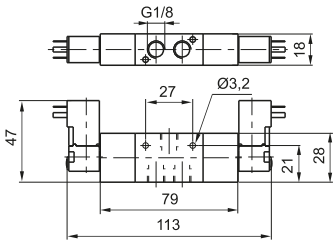

Weight 185 g
Minimum working pressure 1,5 bar

808.32.0.0.Ⓥ

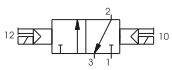

5 ways

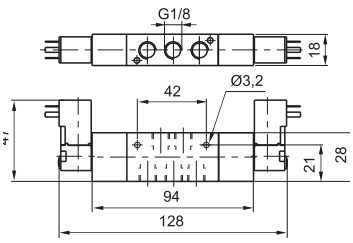

Weight 190 g
Minimum working pressure 1,5 bar

808.52.0.0.Ⓥ

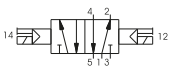

Overall dimensions and technical information are provided solely for informative purposes and may be modified without notice

Solenoid - Solenoid 5 ways 3 connections

Coding: 808.53.Ⓣ.0.0.Ⓥ

Operational characteristics	
Fluid	Filtered air. No lubrication needed, if applied it shall be continuous
Max working pressure (bar)	10
Temperature °C	-5 ÷ +50
Flow rate at 6 bar with Δp=1 (Nl/min)	520
Orifice size (mm)	4
Working ports size	G 1/8"

	TYPE
Ⓣ	**31** = Closed centres
	32 = Open centres

	VOLTAGE
Ⓥ	**01** = 12V D.C.
	02 = 24V D.C.
	05 = 24V A.C.
	06 = 110V A.C.
	07 = 230 V A.C.

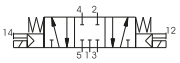

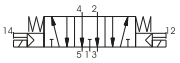

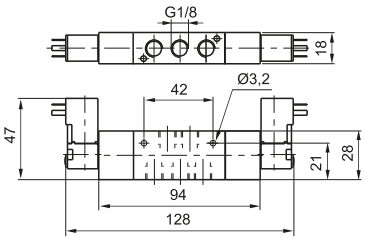

Weight 190 g
Minimum working pressure 3 bar

Collectors

Coding: 808.Ⓝ

	N. POSITIONS
Ⓝ	**02** = 2 positions (weight 180 g)
	03 = 3 positions (weight 245 g)
	04 = 4 positions (weight 310 g)
	05 = 5 positions (weight 375 g)
	06 = 6 positions (weight 440 g)
	07 = 7 positions (weight 500 g)
	08 = 8 positions (weight 560 g)
	09 = 9 positions (weight 620 g)
	10 = 10 positions (weight 680 g)

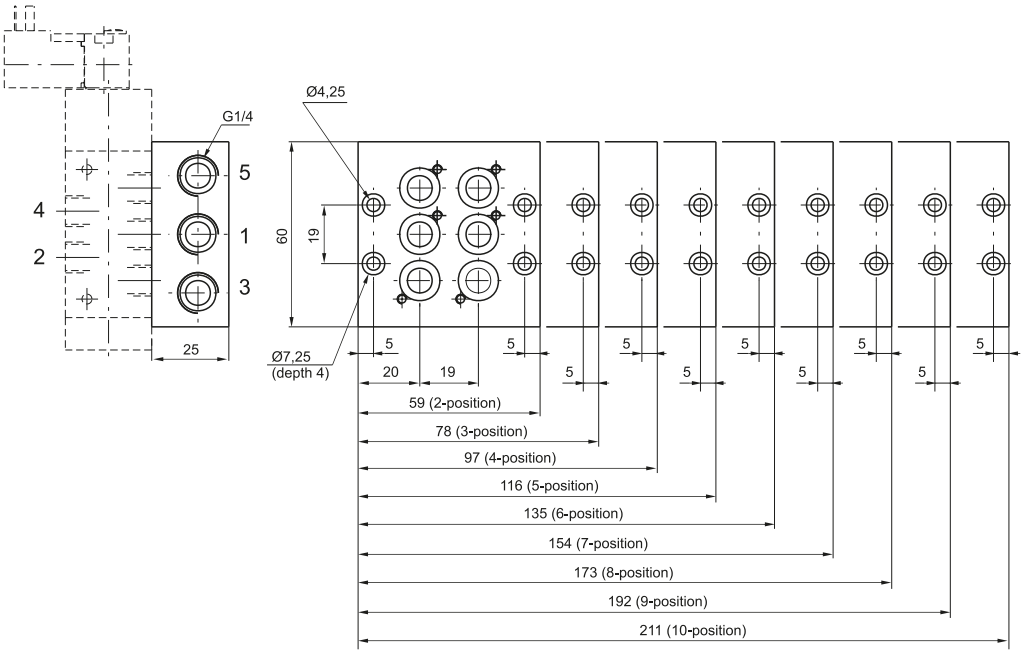

Clip

Coding: 800.00

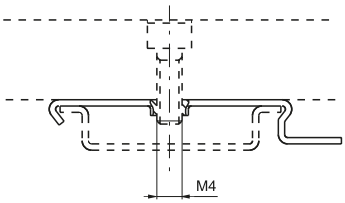

weight 5 g
(for mounting the distributors groups on guide DIN 46277/3)

Closing plate

Coding: 808.00

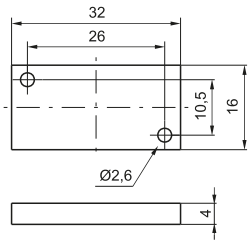

Weight 65 g

Overall dimensions and technical information are provided solely for informative purposes and may be modified without notice

Series 888

General

Competitively priced, good performance and versatility combined with a compact design are the main characteristics of this new series of valves.
The aluminium valve body and spool/seal arrangement optimize both the flow rate and the valve switching time.
This series of valves are available with G1/8" and G1/4" ports in 3/2, 5/2 and 5/3 versions.
Monostable or bistable versions are available and include an integrated technopolymer solenoid operator with 9mm stem and built in manual override.
Solenoid valves series 888 are available in point-to-point and serial configurations.
For serial system specifications, see Optyma-F series.
The valves can be supplied with or without the solenoid coil, however, if the solenoid coil is required please refer to the following table:

Voltages		Coil Code	Voltage Code
Direct current DC	12V (3,5W)	MF4	F04
	24V (3,5W)	MF5	F05
Alternating current AC 50 - 60 Hz	24V (3,7W)	MF56	F56
	110V (3,7W)	MF57	F57
	230V (3,7W)	MF58	F58

Connectors Coding		
Voltages		Kit 100 pieces
DC/AC	24V	888.11.01L-K
Alternating current AC 50 - 60 Hz	110V	888.11.02L-K
	230V	888.11.03L-K

Construction characteristics

Body	Aluminium
Operators	Technopolymer Aluminium for spring bottom plates
Seals	NBR
Spools	Aluminium
Springs	Spring steel
Pistons	Technopolymer

Use and maintenance

These valves have an average life of 15 million cycles
depending on the application and air quality, filtered and lubricated air using specified lubricants will dramatically reduce the wear of the seals and ensures long and trouble free operation.
Please ensure that the valve is being used according with the manufacturers specification, such as air pressure and temperature.
The exhaust ports 3 and 5 must be protected against the possible ingress of dirt or debris.
Repair kits including the spool complete with seals are available for overhauling the valves; however, although this is a simple operation it should be carried out by a competent person.

Solenoid - Spring - 3/2 (Self-feeding)

Operational characteristics	
Fluid	Filtered air. No lubrication needed, if applied it shall be continuous
Max working pressure (bar)	8
Temperature °C	-5 ÷ +50
Flow rate at 6 bar with Δp=1 (Nl/min)	790
Orifice size (mm)	5.8
Working ports size	G 1/8"

Coding: 8880.32.Ⓕ.39.Ⓥ

	FUNCTION
Ⓕ	**A** = Normally Open
	C = Normally Closed

	VOLTAGE		
Ⓥ	**F04**	=	12 V DC
	F05	=	24 V DC
	F56	=	24 V (50-60 Hz)
	F57	=	110 V (50-60 Hz)
	F58	=	230 V (50-60 Hz)
	F00	=	Without coil

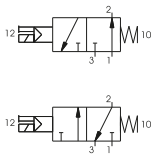

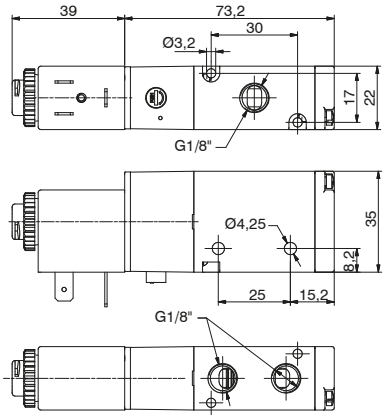

Weight 210 g
Minimum working pressure 2 bar

Solenoid - Spring - 5/2 (Self-feeding)

Operational characteristics	
Fluid	Filtered air. No lubrication needed, if applied it shall be continuous
Max working pressure (bar)	8
Temperature °C	-5 ÷ +50
Flow rate at 6 bar with Δp=1 (Nl/min)	790
Orifice size (mm)	5.8
Working ports size	G 1/8"

Coding: 8880.52.00.39.Ⓥ

	VOLTAGE		
Ⓥ	**F04**	=	12 V DC
	F05	=	24 V DC
	F56	=	24 V (50-60 Hz)
	F57	=	110 V (50-60 Hz)
	F58	=	230 V (50-60 Hz)
	F00	=	Without coil

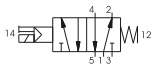

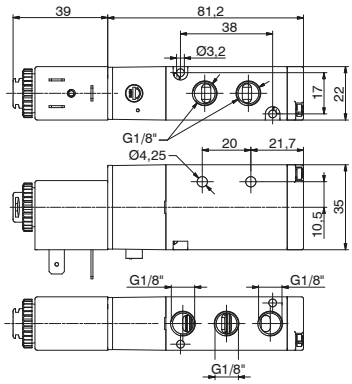

Weight 220 g
Minimum working pressure 2 bar

Solenoid - Solenoid - 3/2

Operational characteristics	
Fluid	Filtered air. No lubrication needed, if applied it shall be continuous
Max working pressure (bar)	8
Temperature °C	-5 ÷ +50
Flow rate at 6 bar with Δp=1 (Nl/min)	790
Orifice size (mm)	5.8
Working ports size	G 1/8"

Coding: 8880.32.00.35.Ⓥ

	VOLTAGE		
Ⓥ	**F04**	=	12 V DC
	F05	=	24 V DC
	F56	=	24 V (50-60 Hz)
	F57	=	110 V (50-60 Hz)
	F58	=	230 V (50-60 Hz)
	F00	=	Without coil

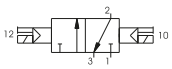

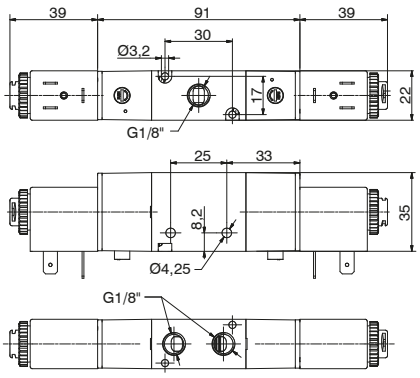

Weight 310 g
Minimum working pressure 2 bar

Overall dimensions and technical information are provided solely for informative purposes and may be modified without notice

Solenoid - Solenoid - 5 ways 2 connections

Operational characteristics	
Fluid	Filtered air. No lubrication needed, if applied it shall be continuous
Max working pressure (bar)	8
Temperature °C	-5 ÷ +50
Flow rate at 6 bar with Δp=1 (Nl/min)	790
Orifice size (mm)	5.8
Working ports size	G 1/8"

Coding: 8880.52.00.35.Ⓥ

	VOLTAGE		
Ⓥ	**F04**	=	12 V DC
	F05	=	24 V DC
	F56	=	24 V (50-60 Hz)
	F57	=	110 V (50-60 Hz)
	F58	=	230 V (50-60 Hz)
	F00	=	Without coil

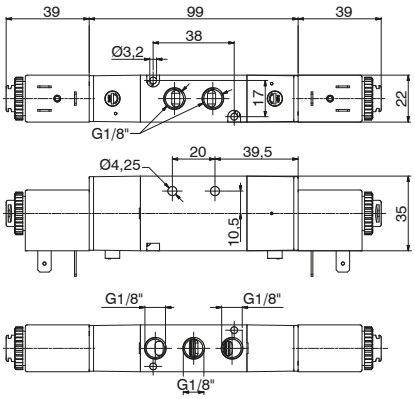

Weight 320 g
Minimum working pressure 2 bar

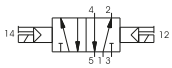

Solenoid - Solenoid - 5 ways 3 connections

Operational characteristics	
Fluid	Filtered air. No lubrication needed, if applied it shall be continuous
Max working pressure (bar)	8
Temperature °C	-5 ÷ +50
Flow rate at 6 bar with Δp=1 (Nl/min)	440
Orifice size (mm)	5.8
Working ports size	G 1/8"

Coding: 8880.53.Ⓕ.35.Ⓥ

	FUNCTION		
Ⓕ	**31**	=	Closed centres
	32	=	Open centres
	33	=	Pressured centres

	VOLTAGE		
Ⓥ	**F04**	=	12 V DC
	F05	=	24 V DC
	F56	=	24 V (50-60 Hz)
	F57	=	110 V (50-60 Hz)
	F58	=	230 V (50-60 Hz)
	F00	=	Without coil

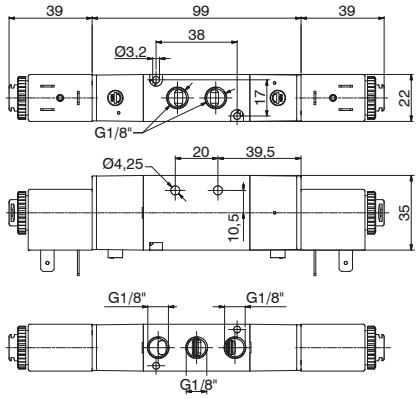

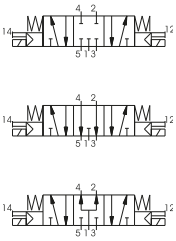

Weight 330 g
Minimum working pressure 2,5 bar

Solenoid - Spring - 3/2 (External-feeding)

Operational characteristics	
Fluid	Filtered air. No lubrication needed, if applied it shall be continuous
Max working pressure (bar)	8
Temperature °C	-5 ÷ +50
Flow rate at 6 bar with Δp=1 (Nl/min)	790
Orifice size (mm)	5.8
Working ports size	G 1/8"

Coding: 8880E.32.Ⓕ.39.Ⓥ

	FUNCTION		
Ⓕ	**A**	=	3/2 Normally Open
	C	=	3/2 Normally Closed

	VOLTAGE		
Ⓥ	**F04**	=	12 V DC
	F05	=	24 V DC
	F56	=	24 V (50-60 Hz)
	F57	=	110 V (50-60 Hz)
	F58	=	230 V (50-60 Hz)
	F00	=	Without coil

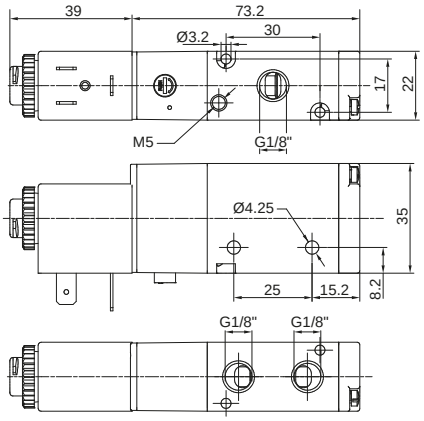

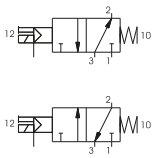

Weight 210 g
Minimum working pressure 2 bar

Solenoid - Spring - 5/2 (External-feeding)

Coding: 8880E.52.00.39.Ⓥ

Operational characteristics	
Fluid	Filtered air. No lubrication needed, if applied it shall be continuous
Max working pressure (bar)	8
Temperature °C	-5 ÷ +50
Flow rate at 6 bar with Δp=1 (Nl/min)	790
Orifice size (mm)	5.8
Working ports size	G 1/8"

	VOLTAGE		
Ⓥ	**F04**	=	12 V DC
	F05	=	24 V DC
	F56	=	24 V (50-60 Hz)
	F57	=	110 V (50-60 Hz)
	F58	=	230 V (50-60 Hz)
	F00	=	Without coil

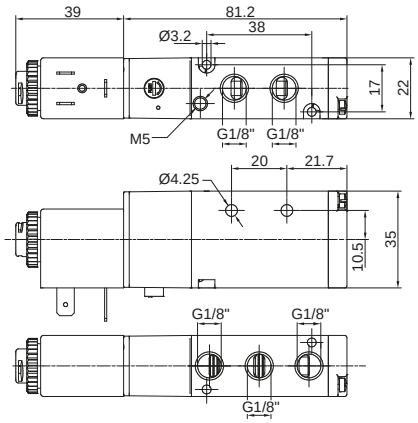

Weight 220 g
Minimum working pressure 2 bar

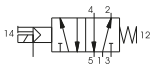

Solenoid - Solenoid - 3/2 (External-feeding)

Coding: 8880E.32.00.35.Ⓥ

Operational characteristics	
Fluid	Filtered air. No lubrication needed, if applied it shall be continuous
Max working pressure (bar)	8
Temperature °C	-5 ÷ +50
Flow rate at 6 bar with Δp=1 (Nl/min)	790
Orifice size (mm)	5.8
Working ports size	G 1/8"

	VOLTAGE		
Ⓥ	**F04**	=	12 V DC
	F05	=	24 V DC
	F56	=	24 V (50-60 Hz)
	F57	=	110 V (50-60 Hz)
	F58	=	230 V (50-60 Hz)
	F00	=	Without coil

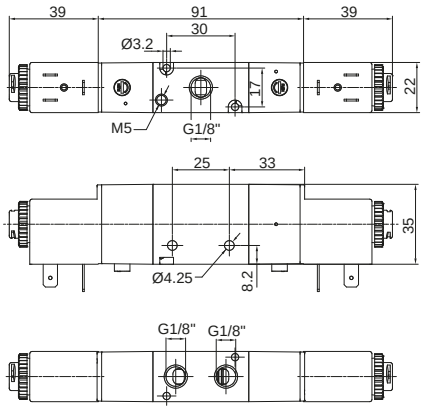

Weight 310 g
Minimum working pressure 2 bar

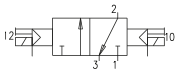

Solenoid - Solenoid - 5/2 (External-feeding)

Coding: 8880E.52.00.35.Ⓥ

Operational characteristics	
Fluid	Filtered air. No lubrication needed, if applied it shall be continuous
Max working pressure (bar)	8
Temperature °C	-5 ÷ +50
Flow rate at 6 bar with Δp=1 (Nl/min)	790
Orifice size (mm)	5.8
Working ports size	G 1/8"

	VOLTAGE		
Ⓥ	**F04**	=	12 V DC
	F05	=	24 V DC
	F56	=	24 V (50-60 Hz)
	F57	=	110 V (50-60 Hz)
	F58	=	230 V (50-60 Hz)
	F00	=	Without coil

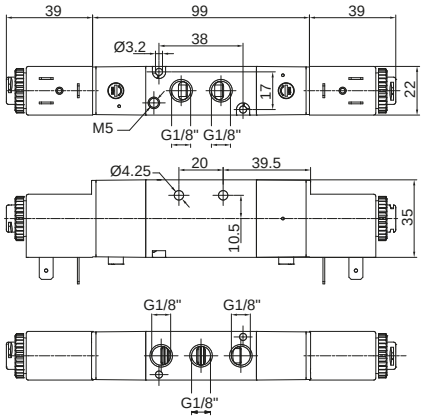

Weight 320 g
Minimum working pressure 2 bar

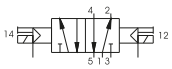

Overall dimensions and technical information are provided solely for informative purposes and may be modified without notice

Solenoid - Solenoid - 5/3 connections (External-feeding)

Operational characteristics	
Fluid	Filtered air. No lubrication needed, if applied it shall be continuous
Max working pressure (bar)	8
Temperature °C	-5 ÷ +50
Flow rate at 6 bar with Δp=1 (Nl/min)	440
Orifice size (mm)	5.8
Working ports size	G 1/8"

Coding: 8880E.53.Ⓕ.35.Ⓥ

	FUNCTION
Ⓕ	**31** = Closed centres
	32 = Open centres
	33 = Pressured centres

	VOLTAGE		
Ⓥ	**F04**	=	12 V DC
	F05	=	24 V DC
	F56	=	24 V (50-60 Hz)
	F57	=	110 V (50-60 Hz)
	F58	=	230 V (50-60 Hz)
	F00	=	Without coil

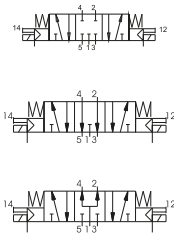

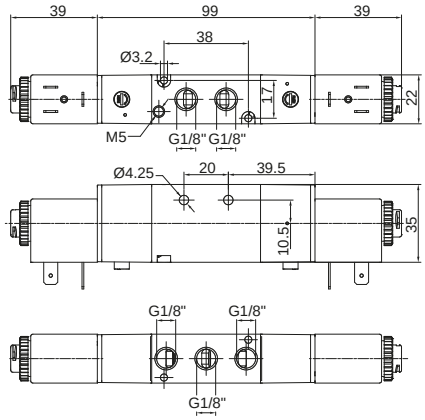

Weight 330 g
Minimum working pressure 2,5 bar

Solenoid - Spring - 3/2 (Self-feeding)

Operational characteristics	
Fluid	Filtered air. No lubrication needed, if applied it shall be continuous
Max working pressure (bar)	8
Temperature °C	-5 ÷ +50
Flow rate at 6 bar with Δp=1 (Nl/min)	890
Orifice size (mm)	6.5
Working ports size	G 1/4"

Coding: 8884.32.Ⓕ.39.Ⓥ

	FUNCTION
Ⓕ	**A** = 3/2 Normally Open
	C = 3/2 Normally Closed

	VOLTAGE		
Ⓥ	**F04**	=	12 V DC
	F05	=	24 V DC
	F56	=	24 V (50-60 Hz)
	F57	=	110 V (50-60 Hz)
	F58	=	230 V (50-60 Hz)
	F00	=	Without coil

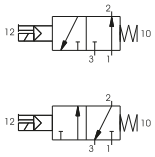

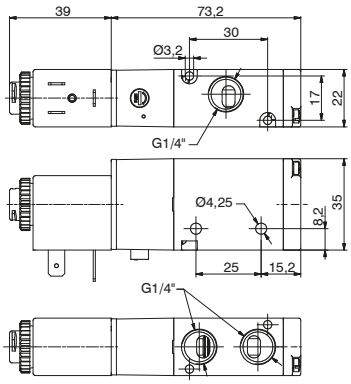

Weight 210 g
Minimum working pressure 2 bar

Solenoid - Spring - 5/2 (Self-feeding)

Operational characteristics	
Fluid	Filtered air. No lubrication needed, if applied it shall be continuous
Max working pressure (bar)	8
Temperature °C	-5 ÷ +50
Flow rate at 6 bar with Δp=1 (Nl/min)	890
Orifice size (mm)	6.5
Working ports size	G 1/4"

Coding: 8884.52.00.39.Ⓥ

	VOLTAGE		
Ⓥ	**F04**	=	12 V DC
	F05	=	24 V DC
	F56	=	24 V (50-60 Hz)
	F57	=	110 V (50-60 Hz)
	F58	=	230 V (50-60 Hz)
	F00	=	Without coil

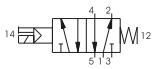

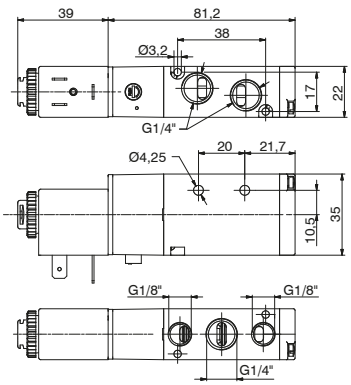

Weight 220 g
Minimum working pressure 2 bar

Solenoid - Solenoid - 3/2

Operational characteristics	
Fluid	Filtered air. No lubrication needed, if applied it shall be continuous
Max working pressure (bar)	8
Temperature °C	-5 ÷ +50
Flow rate at 6 bar with Δp=1 (Nl/min)	890
Orifice size (mm)	6.5
Working ports size	G 1/4"

Coding: 8884.32.00.35.Ⓥ

	VOLTAGE		
Ⓥ	**F04**	=	12 V DC
	F05	=	24 V DC
	F56	=	24 V (50-60 Hz)
	F57	=	110 V (50-60 Hz)
	F58	=	230 V (50-60 Hz)
	F00	=	Without coil

Weight 310 g
Minimum working pressure 2 bar

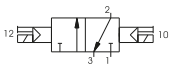

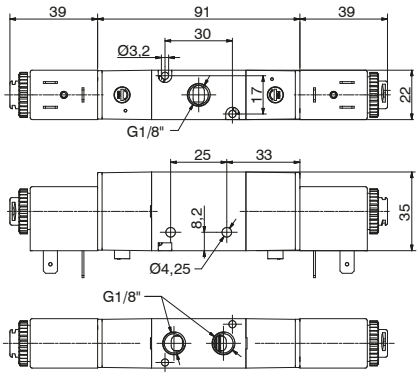

Solenoid - Solenoid - 5/2

Operational characteristics	
Fluid	Filtered air. No lubrication needed, if applied it shall be continuous
Max working pressure (bar)	8
Temperature °C	-5 ÷ +50
Flow rate at 6 bar with Δp=1 (Nl/min)	540
Orifice size (mm)	6.5
Working ports size	G 1/4"

Coding: 8884.52.00.35.Ⓥ

	VOLTAGE		
Ⓥ	**F04**	=	12 V DC
	F05	=	24 V DC
	F56	=	24 V (50-60 Hz)
	F57	=	110 V (50-60 Hz)
	F58	=	230 V (50-60 Hz)
	F00	=	Without coil

Weight 320 g
Minimum working pressure 2 bar

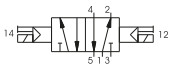

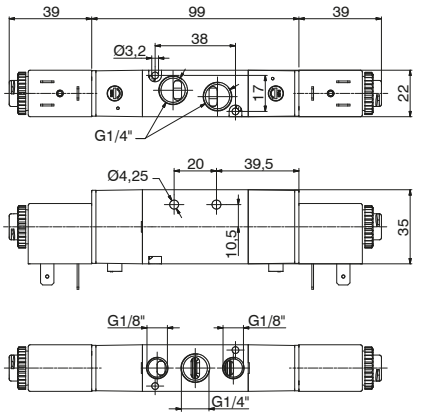

Solenoid - Solenoid - 5/3

Operational characteristics	
Fluid	Filtered air. No lubrication needed, if applied it shall be continuous
Max working pressure (bar)	8
Temperature °C	-5 ÷ +50
Flow rate at 6 bar with Δp=1 (Nl/min)	540
Orifice size (mm)	6.5
Working ports size	G 1/4"

Coding: 8884.53.Ⓕ.35.Ⓥ

	FUNCTION
Ⓕ	**31** = Closed centres
	32 = Open centres
	33 = Pressured centres

	VOLTAGE		
Ⓥ	**F04**	=	12 V DC
	F05	=	24 V DC
	F56	=	24 V (50-60 Hz)
	F57	=	110 V (50-60 Hz)
	F58	=	230 V (50-60 Hz)
	F00	=	Without coil

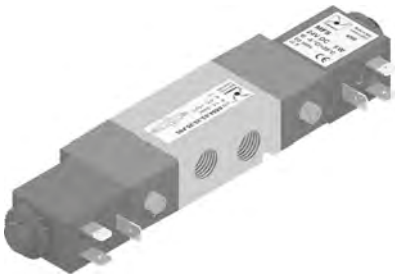

Weight 330 g
Minimum working pressure 2,5 bar

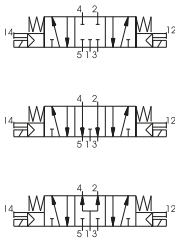

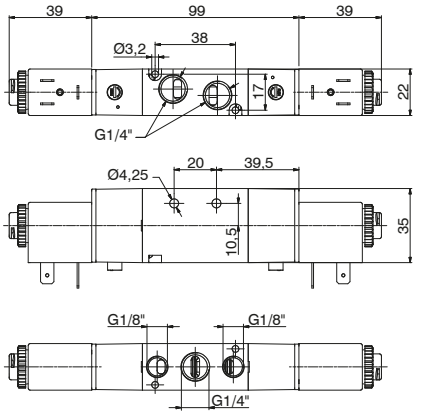

Overall dimensions and technical information are provided solely for informative purposes and may be modified without notice

Manifold (Valves 5/2 - 5/3)

Coding: 888.Ⓟ

	CONNECTION TYPE
Ⓟ	**02** = nr. 2 positions (270 g)
	03 = nr. 3 positions (335 g)
	04 = nr. 4 positions (400 g)
	05 = nr. 5 positions (465 g)
	06 = nr. 6 positions (530 g)
	07 = nr. 7 positions (595 g)
	08 = nr. 8 positions (660 g)
	09 = nr. 9 positions (725 g)
	10 = nr. 10 positions (790 g)
	12 = nr. 12 positions (920 g)
	16 = nr. 16 positions (1180 g)

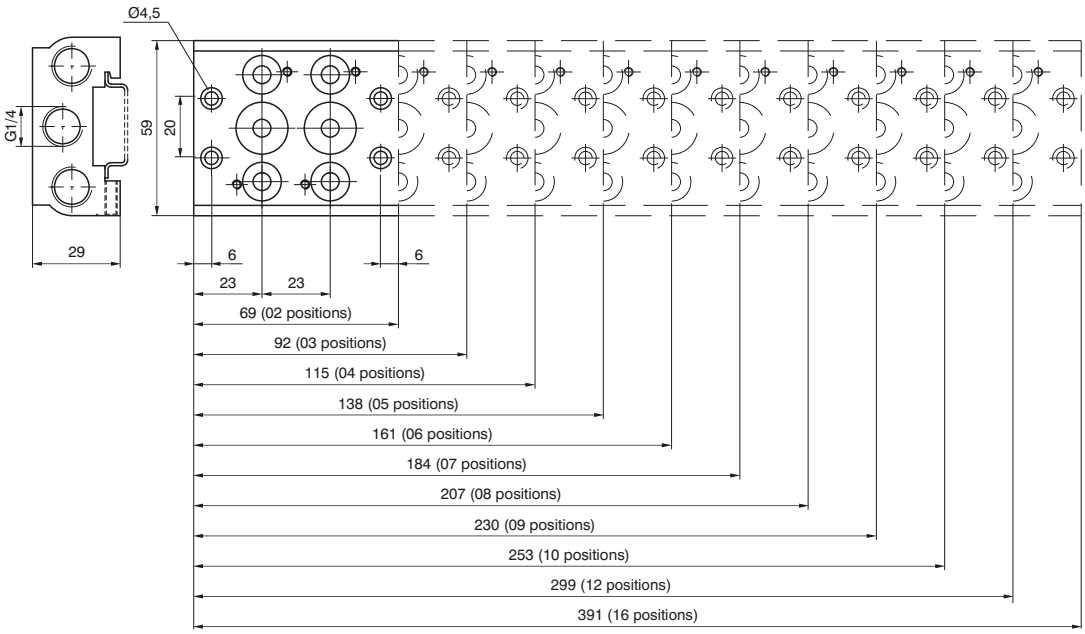

weight 5 g
(for mounting the distributors groups on guide DIN 46277/3)

Closing plate

Coding: 888.00

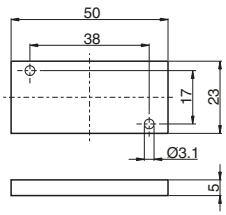

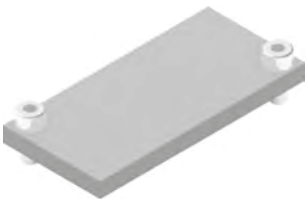

Weight 18 g
Closing plate supplied complete with 2 fixing screws to the manifold and 2 fixing screws to the multi-polar base

Manifold (Valves 3/2)

Coding: 8883.Ⓟ

	CONNECTION TYPE
Ⓟ	**02** = nr. 2 positions (270 g)
	03 = nr. 3 positions (335 g)
	04 = nr. 4 positions (400 g)
	05 = nr. 5 positions (465 g)
	06 = nr. 6 positions (530 g)
	07 = nr. 7 positions (595 g)
	08 = nr. 8 positions (660 g)
	09 = nr. 9 positions (725 g)
	10 = nr. 10 positions (790 g)
	12 = nr. 12 positions (920 g)
	16 = nr. 16 positions (1180 g)

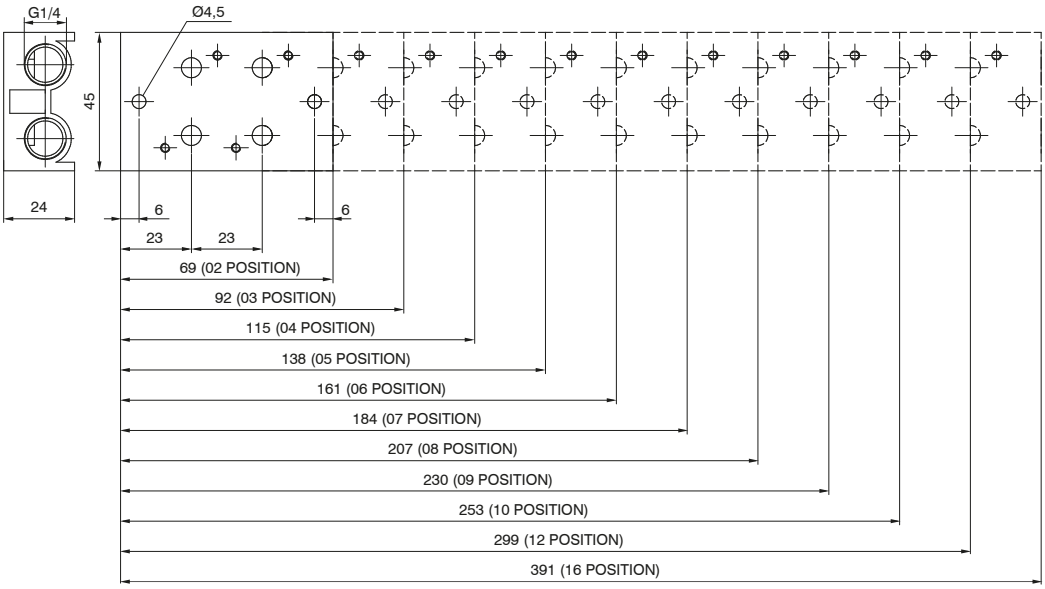

weight 5 g
(for mounting the distributors groups on guide DIN 46277/3)

Closing plate

Coding: 8883.00

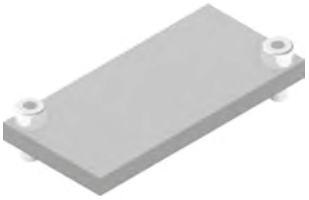

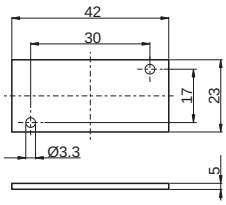

Weight 10 g
Closing plate supplied complete with 2 fixing screws to the manifold

Overall dimensions and technical information are provided solely for informative purposes and may be modified without notice

Endplate, 37 Poles IP65

Coding: 888M.37.10

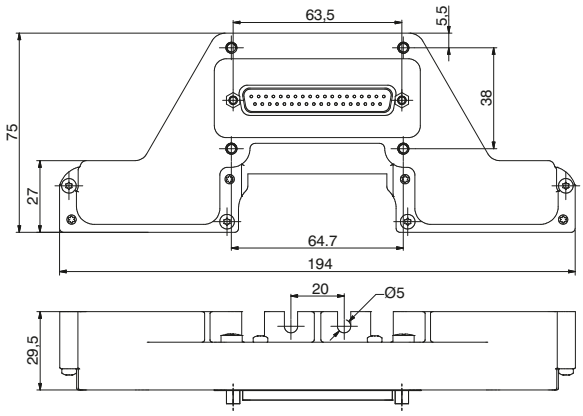

Weight 186 g
The IP65 protection is obtained by IP65 Pneumax cable.
Code complete with assembled endplate and 4 manifold fixing screws, previously mounted on the Manifold.

Endplate, 25 Poles IP65

Coding: 888M.25.10

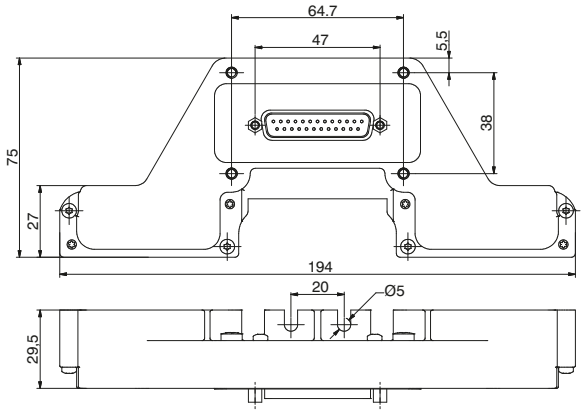

Weight 181 g
The IP65 protection is obtained by IP65 Pneumax cable.
Code complete with assembled endplate and 4 manifold fixing screws, previously mounted on the Manifold.

Modular base, 2 positions IP65

Coding: 888M.02.BM

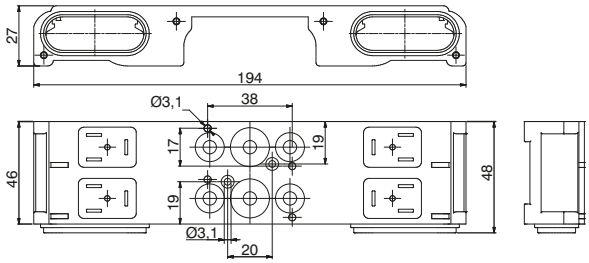

Weight 220 g
Complete with seals and fixing screws
Usable only for 5/2 and 5/3 Distributors

Left and Right Power board PNP 24 VDC

Coding: 888M.Ⓟ.Ⓣ

Ⓟ	POSITIONS
	04 = nr. 4 positions (11,2 g)
	08 = nr. 8 positions (22,4 g)
	12 = nr. 12 positions (33,6 g)
	16 = nr. 16 positions (44,8 g)
Ⓣ	TYPE
	00 = Left
	01 = Right

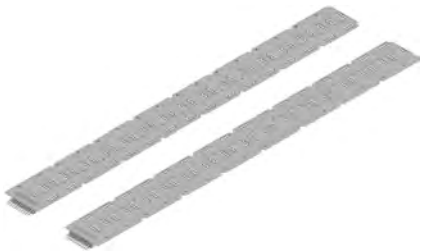

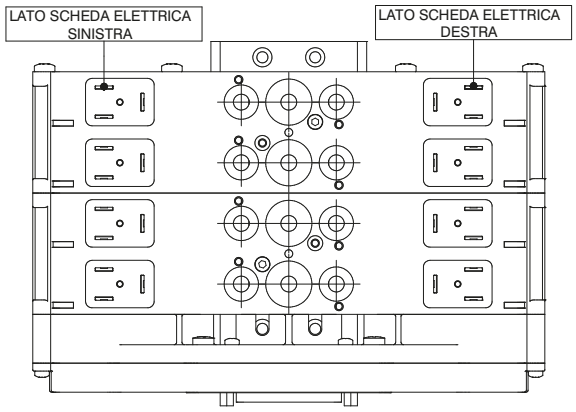

weight 5 g
(for mounting the distributors groups on guide DIN 46277/3)

1

AIR DISTRIBUTION

Closing plate

Coding: 888M.22.PC

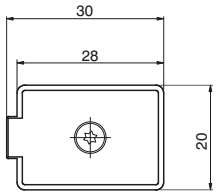

Weight 3 g
Closing plate supplied complete with 1 Seal and fixing screw with O ring
Maximum fixing torque for fittings: 0,35Nm

Multipolar base plug

Coding: 888M.T

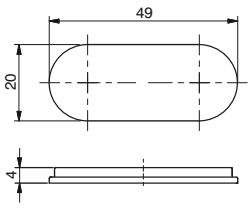

Weight 2,6 g
Complete with: Nr. 1 Plug, Nr. 2 Fixing screws

Seals

Coding: 888M.22.G

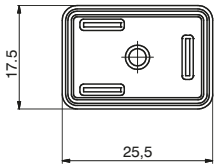

Weight 0,52 g

In line cable complete with connector IP40

Coding: 2400.T.L.00

T	CONNECTORS
	25 = 25 poles
	37 = 37 poles
L	CABLE LENGTH
	03 = 3 meters
	05 = 5 meters
	10 = 10 meters

Cable complete with connector, 25 Poles IP65

Coding: 2300.25.L.C

L	CABLE LENGTH
	03 = 3 meters
	05 = 5 meters
	10 = 10 meters
C	CONNECTOR
	10 = In line
	90 = 90° Angle

Cable complete with connector, 37 Poles IP65

Coding: 2400.37.L.C

L	CABLE LENGTH
	03 = 3 meters
	05 = 5 meters
	10 = 10 meters
C	CONNECTOR
	10 = In line
	90 = 90° Angle

Overall dimensions and technical information are provided solely for informative purposes and may be modified without notice

Manifold layout Configuration Point to Point

3/2 valves

V22	P (point to point)	–	–	...

Nr. POSITIONS:

A= 02 positions
B= 03 positions
C= 04 positions
D= 05 positions
E= 06 positions
F= 07 positions
G= 08 positions
H= 09 positions
I= 10 positions
M= 12 positions
Q= 16 positions

VOLTAGE:

A= 12 V DC
B= 24 V DC
C= 24 V (50-60 Hz)
D= 110 V (50-60 Hz)
E= 230 V (50-60 Hz)
Z= without coil

SHORT CODE FUNCTION / CONNECTION :

G1= EV 3/2 SOL.-SPRING G1/8" N.O.
G2= EV 3/2 SOL.-SPRING G1/4" N.O.
H1= EV 3/2 SOL.-SPRING G1/8" N.C.
H2= EV 3/2 SOL.-SPRING G1/4" N.C.

L1= EV 3/2 SOL.-SPRING G1/8" N.O. EXT. FEED.
M1= EV 3/2 SOL.-SPRING G1/8" N.C. EXT. FEED.

N1= EV 3/2 SOL.-SOL. G1/8"
N2= EV 3/2 SOL.-SOL. G1/4"
P1= EV 3/2 SOL.-SOL. G1/8" EXT. FEEDING

T4= VALVE SPACE PLUG 3/2

5/2 valves

V22	P (point to point)	–	–	...

Nr. POSITIONS:

A= 02 positions
B= 03 positions
C= 04 positions
D= 05 positions
E= 06 positions
F= 07 positions
G= 08 positions
H= 09 positions
I= 10 positions
M= 12 positions
Q= 16 positions

VOLTAGE:

A= 12 V DC
B= 24 V DC
C= 24 V (50-60 Hz)
D= 110 V (50-60 Hz)
E= 230 V (50-60 Hz)
Z= without coil

SHORT CODE FUNCTION / CONNECTION :

A1= S.V. 5/2 SOL.-SPRING G1/8"
A2= S.V. 5/2 SOL.-SPRING G1/4"
D1= S.V. 5/2 SOL.-SPRING G1/8" EXT. FEED.
B1= S.V. 5/2 SOL.-SOL. G1/8"
B2= S.V. 5/2 SOL.-SOL. G1/4"
E1= S.V. 5/2 SOL.-SOL. G1/8" EXT. FEED.
C1= S.V. 5/3 CC SOL.-SOL. G1/8"
C2= S.V. 5/3 CC SOL.-SOL. G1/4"
F1= S.V. 5/3 CC SOL.-SOL. G1/8" EXT. FEED.
C3= S.V. 5/3 OC SOL.-SOL. G1/8"
C4= S.V. 5/3 OC SOL.-SOL. G1/4"
F3= S.V. 5/3 OC SOL.-SOL. G1/8" EXT. FEED.
C5= S.V. 5/3 PC SOL.-SOL. G1/8"
C6= S.V. 5/3 PC SOL.-SOL. G1/4"
F5= S.V. 5/3 PC SOL.-SOL. G1/8" EXT. FEED.
T3= VALVE SPACE PLUG

Manifold layout Configuration Multi-pole

V22	M (Multi-pole)	– –	–	–	...

LEFT ENDPLATES

P2= 25 poles (max. 11 S.E.)
P3= 37 poles (max. 16 S.E.)

LEFT BOARD SIGNALS

C= 04 positions
G= 08 positions
M= 12 positions
Q= 16 positions

RIGHT BOARD SIGNALS

C= 04 positions
G= 08 positions
M= 12 positions
Q= 16 positions
00= no board

SHORT CODE FUNCTION / CONNECTION :

A1= S.V. 5/2 SOL.-SPRING G1/8"
A2= S.V. 5/2 SOL.-SPRING G1/4"
D1= S.V. 5/2 SOL.-SPRING G1/8" EXT. FEEDING
B1= S.V. 5/2 SOL.-SOL. G1/8"
B2= S.V. 5/2 SOL.-SOL. G1/4"
E1= S.V. 5/2 SOL.-SOL. G1/8" EXT. FEEDING
C1= S.V. 5/3 CC SOL.-SOL. G1/8"
C2= S.V. 5/3 CC SOL.-SOL. G1/4"
F1= S.V. 5/3 CC SOL.-SOL. G1/8" EXT. FEEDING
C3= S.V. 5/3 OC SOL.-SOL. G1/8"
C4= S.V. 5/3 OC SOL.-SOL. G1/4"
F3= S.V. 5/3 OC SOL.-SOL. G1/8" EXT. FEEDING
C5= S.V. 5/3 PC SOL.-SOL. G1/8"
C6= S.V. 5/3 PC SOL.-SOL. G1/4"
F5= S.V. 5/3 PC SOL.-SOL. G1/8" EXT. FEEDING
T1= VALVE SPACE PLUG
+ Nr. 2 ELECTRICAL SPACE PLUGS

Serial manifold layout (for the serial system node, see the Optyma-F Series)

V22	S (Serial)	– –	–	– –	–	–	...

INPUT MODULE

A= None
D1= 8IN DIGITAL MODULE M8
D2= 16IN DIGITAL MODULE D-SUB 25 P
T1= 2IN ANALOG MODULE 0-5V
T2= 2IN ANALOG MODULE 0-10V
C1= 2IN ANALOG MODULE 0-20mA
C1= 2IN ANALOG MODULE 4-20mA

SERIAL NODE

C3= CANopen® 32 OUT
D3= DeviceNet 32 OUT
P3= PROFIBUS DP 32 OUT
A3= EtherCAT® 32 OUT
I3= EtherNet/IP 32 OUT
N3= PROFINET IO RT/IRT 32 OUT
L3= Powerlink 32 OUT
M3= Modbus/TCP 32 OUT

LEFT BOARD SIGNALS

C= 04 positions
G= 08 positions
M= 12 positions
Q= 16 positions

RIGHT BOARD SIGNALS

C= 04 positions
G= 08 positions
M= 12 positions
Q= 16 positions
00= no board

SHORT CODE FUNCTION / CONNECTION :

A1= S.V. 5/2 SOL.-SPRING G1/8"
A2= S.V. 5/2 SOL.-SPRING G1/4"
D1= S.V. 5/2 SOL.-SPRING G1/8" EXT. FEED.
B1= S.V. 5/2 SOL.-SOL. G1/8"
B2= S.V. 5/2 SOL.-SOL. G1/4"
E1= S.V. 5/2 SOL.-SOL. G1/8" EXT. FEED.
C1= S.V. 5/3 CC SOL.-SOL. G1/8"
C2= S.V. 5/3 CC SOL.-SOL. G1/4"
F1= S.V. 5/3 CC SOL.-SOL. G1/8" EXT. FEED.
C3= S.V. 5/3 OC SOL.-SOL. G1/8"
C4= S.V. 5/3 OC SOL.-SOL. G1/4"
F3= S.V. 5/3 OC SOL.-SOL. G1/8" EXT. FEED.
C5= S.V. 5/3 PC SOL.-SOL. G1/8"
C6= S.V. 5/3 PC SOL.-SOL. G1/4"
F5= S.V. 5/3 PC SOL.-SOL. G1/8" EXT. FEED.
T1= VALVE SPACE PLUG
+ Nr. 2 ELECTRICAL SPACE PLUGS

NOTE:
When constructing the configuration, please consider that the maximum number of valves that can be mounted on the manifold is 16, regardless of the valve type.
Any valve position presents two electrical connections: in case of use of monostable valves(A1-A2) it will be necessary to assemble a plug to protect the unused electrical connection.
The correspondence between the electrical signal and its location on the manifold is showed in the following diagrams.

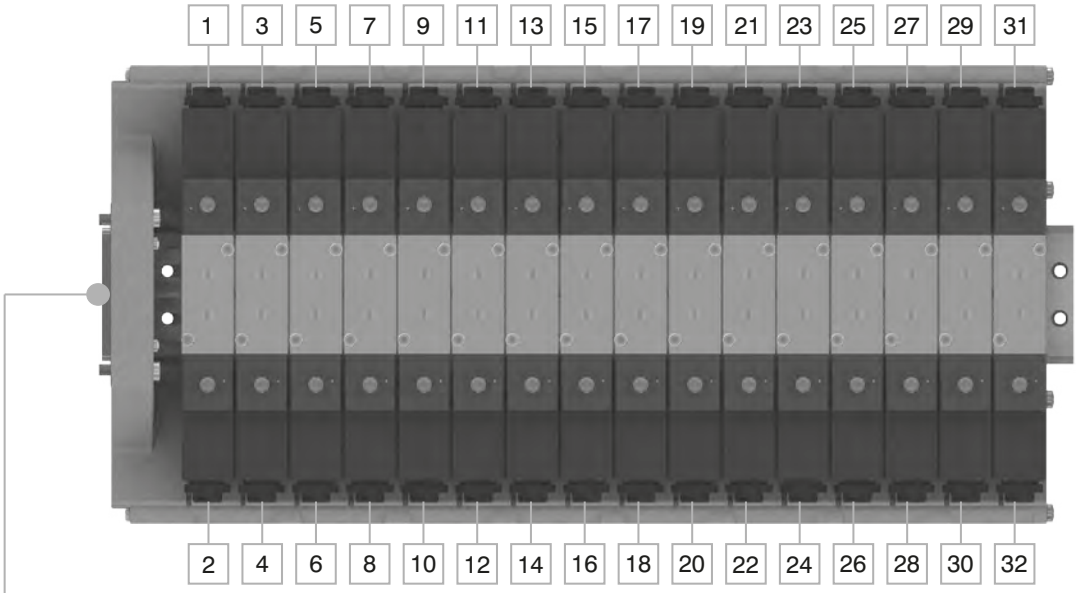

Connector 25 Poles from 1 to 11
Positions E.V. Bistable / Monostable

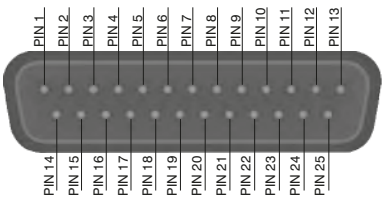

1 - 22 = SIGNALS
23 - 24 = GND
25 = NC

Connector 37 Poles from 1 to 16
Positions E.V. Bistable / Monostable

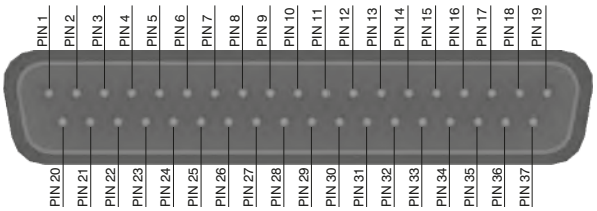

1 - 32 = SIGNALS
33 - 35 = GND
36 - 37 = NC

Overall dimensions and technical information are provided solely for informative purposes and may be modified without notice

Assembly sequence

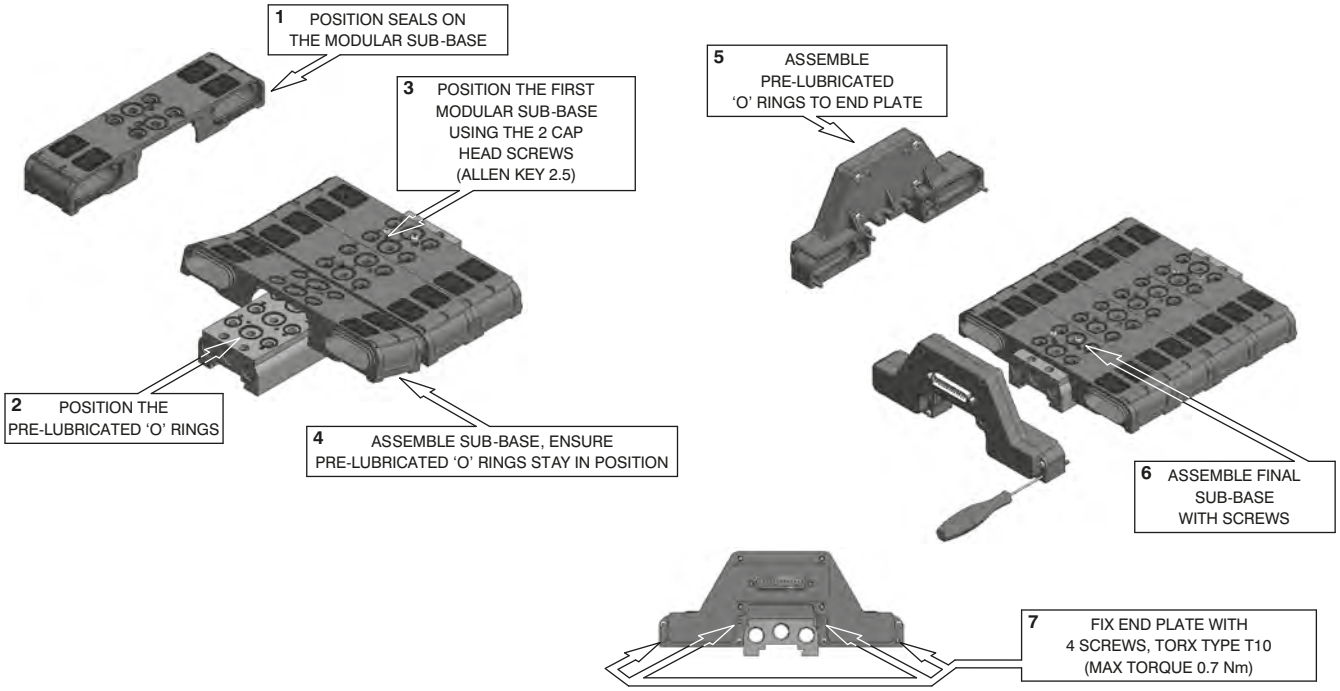

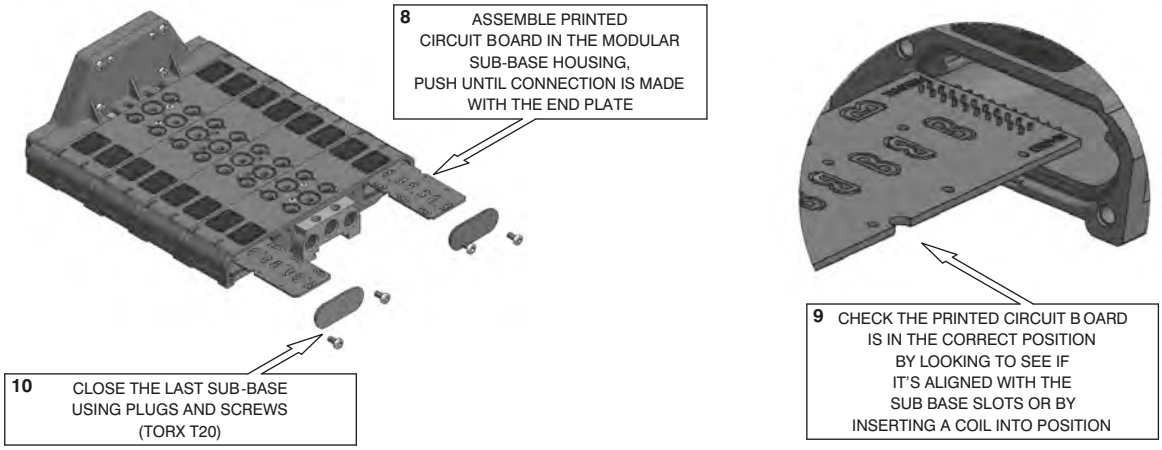

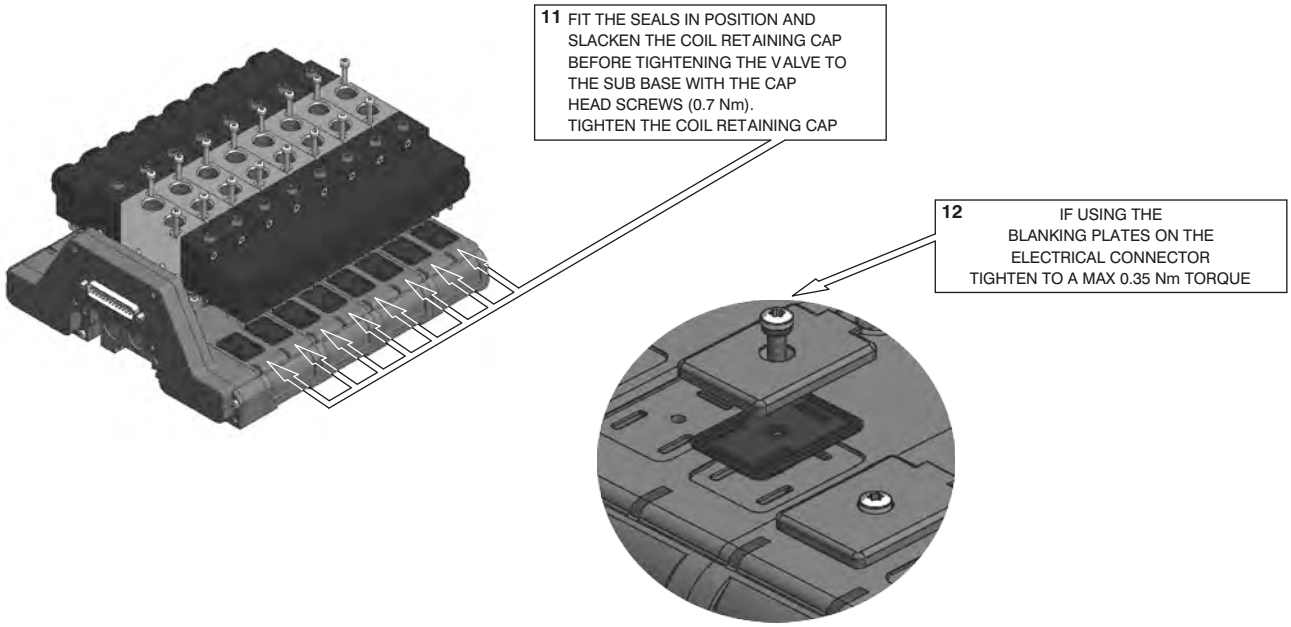

Series 400

General

These are 2 stage valves actuated electro-pneumatically. A serie 300 directly operated solenoid valve actuates pneumatically the principal power distributor.
This integrated system allows configurations of systems requiring very little space.
The pilot air is normally taken from the inlet port (autofeed) and the only actuating signal is electric.
The range of the solenoid valves, as far as dimensions and mechanical construction, is similar to series 200.
We have therefore solenoid valves G 1/8", G 1/4", G 1/2" and G 1" with identical pneumatic characteristics that are, however, actuated electrically.
They have a balanced spool, insentive to presence or absence of pressure. They are constructed in 3 and 5 way with 1 solenoid (monostable) or 2 solenoids (bistable) and also 5 ways 3 positions with closed centres, open centres and pressured centres.
If should be noted that the autofeed of the electric pilot requires always inlet through port 1 and if a 3 ways normally open configuration is desired, it is necessary to switch the operators.
Solenoid valves G 1/8" and G 1/4" can be equipped with microsolenoids as well as standard solenoids and they can be mounted in line or in 90 degrees on valves.
Please note that while the microsolenoid can be mounted in any direction, standard solenoid requires mounting as inticated in the photographs and diagrams.

The order codes pertain only to the solenoid valve with mechanical actuator "M2" or solenoid "S*" already assembled.
M2 coils are not included and have to be ordered separately (see Series 300).
Coils for M2 and solenoids "S" homologated are available (see Series 300).

Construction characteristics

Body	Aluminium
Operators	Aluminium Technopolymer for spring botton plate G 1/8", G1/4", G 1/2" and aluminium for G 1"
Seals	NBR Polyurethane compound for oil free applications (G 1/8", G 1/4" and G 1/2")
Spacer	Technopolymer (aluminium for G1")
Spools	Steel
Springs	Stainless steel or spring steel

Use and maintenance

This valves have an average life of 15 million cycles depending on the application and air quality.
Filtered and lubricated air using specified lubricants will reduce the wear of the seals and ensures long and trouble free operation.
Please ensure that the valve is being used according with the manufacturers specification, such as air pressure and temperature.
The exhaust port of the distributor has to be protected in a dusty and dirty environment.
Repair kits including the spool complete with seals are available for overhauling the valves.
However, although this is a simple operation it should be carried out by a competent person.

ATTENTION: use hydraulic oil class H for lubrication such as MAGNA GC 32 (Castrol).

Overall dimensions and technical information are provided solely for informative purposes and may be modified without notice

Solenoid - Spring

Coding: 468.❶.0.1.M2

Operational characteristics	
Fluid	Filtered air. No lubrication needed, if applied it shall be continuous
Max working pressure (bar)	10
Temperature °C	-5 ÷ +50
Flow rate at 6 bar with Δp=1 (Nl/min)	540
Orifice size (mm)	6
Working ports size	G 1/8"

❶	TYPE
	32 = 3 ways
	52 = 5 ways

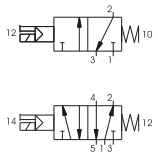

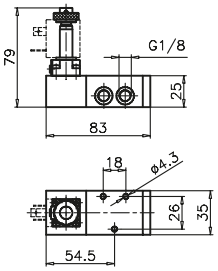

Weight 240 g
Minimum working pressure 2,5 bar

468.32.0.1.M2

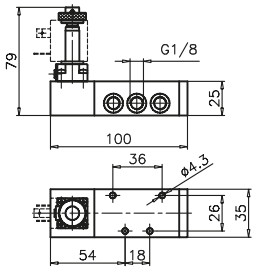

Weight 240 g
Minimum working pressure 2,5 bar

468.52.0.1.M2

Solenoid - Differential

Coding: 468.❶.0.12.M2

Operational characteristics	
Fluid	Filtered air. No lubrication needed, if applied it shall be continuous
Max working pressure (bar)	10
Temperature °C	-5 ÷ +50
Flow rate at 6 bar with Δp=1 (Nl/min)	540
Orifice size (mm)	6
Working ports size	G 1/8"

❶	TYPE
	32 = 3 ways
	52 = 5 ways

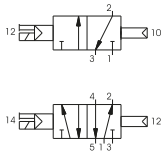

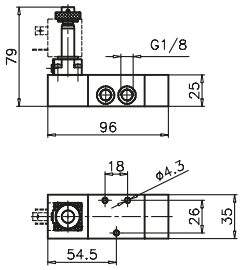

Weight 280 g
Minimum working pressure 2,5 bar

468.32.0.12.M2

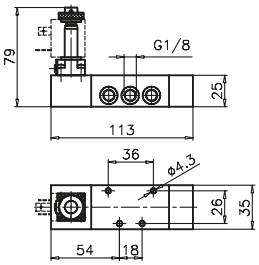

Weight 320 g
Minimum working pressure 2,5 bar

468.52.0.12.M2

Solenoid - Solenoid

Coding: 468.❶.0.0.M2

Operational characteristics	
Fluid	Filtered air. No lubrication needed, if applied it shall be continuous
Max working pressure (bar)	10
Temperature °C	-5 ÷ +50
Flow rate at 6 bar with Δp=1 (Nl/min)	540
Orifice size (mm)	6
Working ports size	G 1/8"

❶	TYPE
	32 = 3 ways
	52 = 5 ways

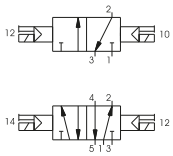

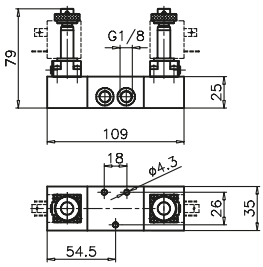

Weight 370 g
Minimum working pressure 2 bar

468.32.0.0.M2

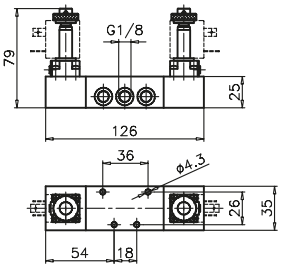

Weight 410 g
Minimum working pressure 2 bar

468.52.0.0.M2

Solenoid - Solenoid 5 ways 3 connections

Coding: 468.53.Ⓕ.0.0.M2

Operational characteristics	
Fluid	Filtered air. No lubrication needed, if applied it shall be continuous
Max working pressure (bar)	10
Temperature °C	-5 ÷ +50
Flow rate at 6 bar with Δp=1 (Nl/min)	410
Orifice size (mm)	6
Working ports size	G 1/8"

Ⓕ	FUNCTION
	31 = Closed centres
	32 = Open centres
	33 = Pressured centres

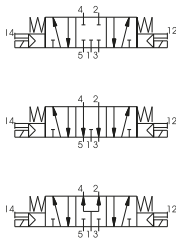

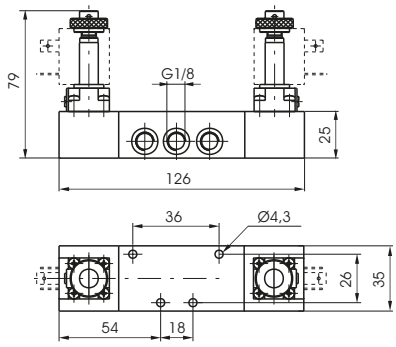

Weight 420 g
Minimum working pressure 3 bar

Solenoid - Spring

Coding: 468/1.Ⓣ.0.1.M2

Operational characteristics	
Fluid	Filtered air. No lubrication needed, if applied it shall be continuous
Max working pressure (bar)	10
Temperature °C	-5 ÷ +50
Flow rate at 6 bar with Δp=1 (Nl/min)	540
Orifice size (mm)	6
Working ports size	G 1/8"

Ⓣ	TYPE
	32 = 3 ways
	52 = 5 ways

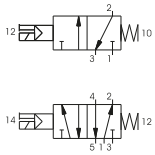

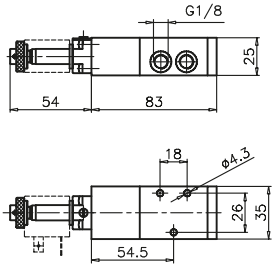

Weight 240 g
Minimum working pressure 2,5 bar

468/1.32.0.1.M2

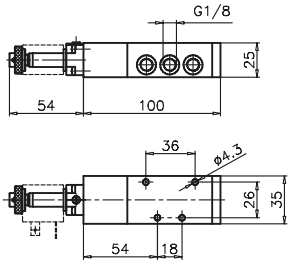

Weight 280 g
Minimum working pressure 2,5 bar

468/1.52.0.1.M2

Solenoid - Differential

Coding: 468/1.Ⓣ.0.12.M2

Operational characteristics	
Fluid	Filtered air. No lubrication needed, if applied it shall be continuous
Max working pressure (bar)	10
Temperature °C	-5 ÷ +50
Flow rate at 6 bar with Δp=1 (Nl/min)	540
Orifice size (mm)	6
Working ports size	G 1/8"

Ⓣ	TYPE
	32 = 3 ways
	52 = 5 ways

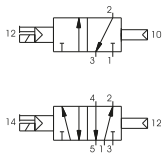

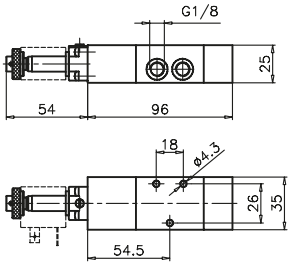

Weight 280 g
Minimum working pressure 2,5 bar

468/1.32.0.12.M2

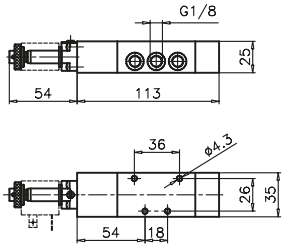

Weight 320 g
Minimum working pressure 2,5 bar

468/1.52.0.12.M2

Overall dimensions and technical information are provided solely for informative purposes and may be modified without notice

Solenoid - Solenoid

Coding: 468/1.Ⓣ.0.0.M2

Operational characteristics	
Fluid	Filtered air. No lubrication needed, if applied it shall be continuous
Max working pressure (bar)	10
Temperature °C	-5 ÷ +50
Flow rate at 6 bar with Δp=1 (Nl/min)	540
Orifice size (mm)	6
Working ports size	G 1/8"

	TYPE
Ⓣ	**32** = 3 ways
	52 = 5 ways

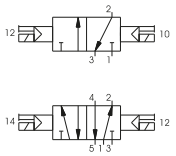

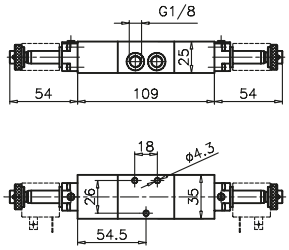

Weight 370 g
Minimum working pressure 2 bar

468/1.32.0.0.M2

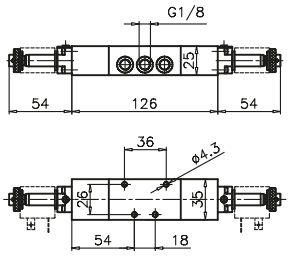

Weight 410 g
Minimum working pressure 2 bar

468/1.52.0.0.M2

Solenoid - Solenoid 5 ways 3 connections

Coding: 468/1.53.Ⓕ.0.0.M2

Operational characteristics	
Fluid	Filtered air. No lubrication needed, if applied it shall be continuous
Max working pressure (bar)	10
Temperature °C	-5 ÷ +50
Flow rate at 6 bar with Δp=1 (Nl/min)	410
Orifice size (mm)	6
Working ports size	G 1/8"

	FUNCTION
Ⓕ	**31** = Closed centres
	32 = Open centres
	33 = Pressured centres

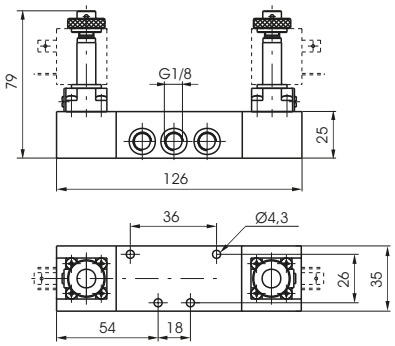

Weight 420 g
Minimum working pressure 3 bar

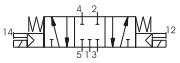

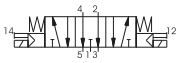

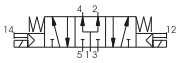

1

AIR DISTRIBUTION

Solenoid - Spring

Coding: 488.Ⓣ.0.1.Ⓢ

Operational characteristics	
Fluid	Filtered air. No lubrication needed, if applied it shall be continuous
Max working pressure (bar)	10
Temperature °C	-5 ÷ +50
Flow rate at 6 bar with Δp=1 (Nl/min)	620
Orifice size (mm)	6
Working ports size	G 1/8"
Responce time according to ISO 12238, activation time (ms)	20,3 (3 ways) 22,5 (5 ways)
Responce time according to ISO 12238, deactivation time (ms)	44,5 (3 ways) 47,0 (5 ways)

Ⓣ	TYPE
	32 = 3 ways
	52 = 5 ways

Shifting time of pneumatic directional control valves or moving parts, logic devices were measured in accordance to ISO 12238:2001

Ⓢ	SOLENOID
	M11 = 24V D.C. (rating power 3,8W)
	M56 = 24V 50/60Hz (starting power 9VA, rating power 6VA)
	M57 = 110 V 50/60Hz (starting power 9 A, rating power 6 A)
	M58 = 230V 50/60Hz (starting power 9VA, rating power 6VA)

Weight 220 g
Minimum working pressure 2,5 bar

488.32.0.1.Ⓢ

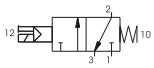

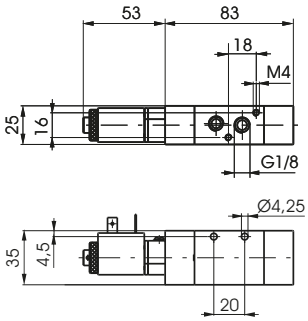

Weight 260 g
Minimum working pressure 2,5 bar

488.52.0.1.Ⓢ

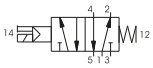

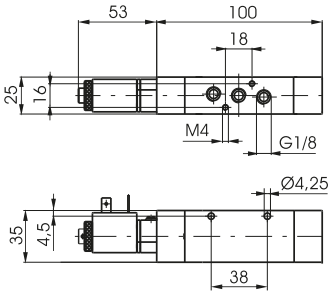

Solenoid - Differential

Coding: 488.Ⓣ.0.12.Ⓢ

Operational characteristics	
Fluid	Filtered air. No lubrication needed, if applied it shall be continuous
Max working pressure (bar)	10
Temperature °C	-5 ÷ +50
Flow rate at 6 bar with Δp=1 (Nl/min)	620
Orifice size (mm)	6
Working ports size	G 1/8"
Responce time according to ISO 12238, activation time (ms)	28,0 (3 ways) 28,3 (5 ways)
Responce time according to ISO 12238, deactivation time (ms)	34,5 (3 ways) 35,5 (5 ways)

Ⓣ	TYPE
	32 = 3 ways
	52 = 5 ways

Shifting time of pneumatic directional control valves or moving parts, logic devices were measured in accordance to ISO 12238:2001

Ⓢ	SOLENOID
	M11 = 24V D.C. (rating power 3,8W)
	M56 = 24V 50/60Hz (starting power 9VA, rating power 6VA)
	M57 = 110 V 50/60Hz (starting power 9 A, rating power 6 A)
	M58 = 230V 50/60Hz (starting power 9VA, rating power 6VA)

Weight 220 g
Minimum working pressure 2,5 bar

488.32.0.12.Ⓢ

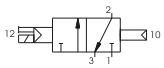

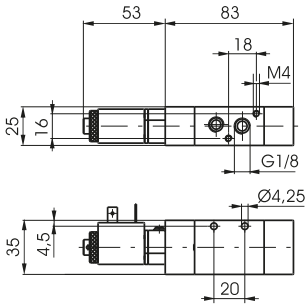

Weight 260 g
Minimum working pressure 2,5 bar

488.52.0.12.Ⓢ

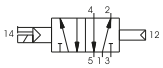

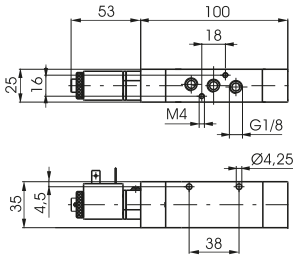

Solenoid - Solenoid

Coding: 488.Ⓣ.0.0.Ⓢ

Operational characteristics	
Fluid	Filtered air. No lubrication needed, if applied it shall be continuous
Max working pressure (bar)	10
Temperature °C	-5 ÷ +50
Flow rate at 6 bar with Δp=1 (Nl/min)	410
Orifice size (mm)	6
Working ports size	G 1/8"
Responce time according to ISO 12238, activation time (ms)	19,0 (3 ways) 18,2 (5 ways)
Responce time according to ISO 12238, deactivation time (ms)	21,1 (3 ways) 18,5 (5 ways)

Ⓣ	TYPE
	32 = 3 ways
	52 = 5 ways

Shifting time of pneumatic directional control valves or moving parts, logic devices were measured in accordance to ISO 12238:2001

Ⓢ	SOLENOID
	M11 = 24V D.C. (rating power 3,8W)
	M56 = 24V 50/60Hz (starting power 9VA, rating power 6VA)
	M57 = 110 V 50/60Hz (starting power 9 A, rating power 6 A)
	M58 = 230V 50/60Hz (starting power 9VA, rating power 6VA)

Weight 320 g
Minimum working pressure 2 bar

488.32.0.0.Ⓢ

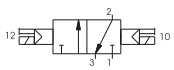

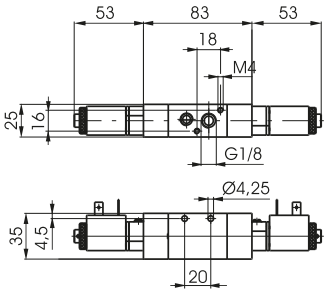

Weight 360 g
Minimum working pressure 2 bar

488.52.0.0.Ⓢ

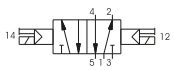

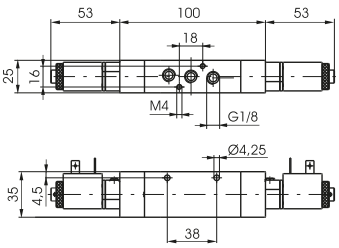

Overall dimensions and technical information are provided solely for informative purposes and may be modified without notice

Solenoid - Solenoid 5 ways 3 connections

Coding: 488.53.Ⓕ.0.0.Ⓢ

Operational characteristics	
Fluid	Filtered air. No lubrication needed, if applied it shall be continuous
Max working pressure (bar)	10
Temperature °C	-5 ÷ +50
Flow rate at 6 bar with Δp=1 (Nl/min)	410
Orifice size (mm)	6
Working ports size	G 1/8"
Responce time according to ISO 12238, activation time (ms)	23,0 (closed centres) 21,5 (open centres) 18,9 (pressured centres)
Responce time according to ISO 12238, deactivation time (ms)	41,0 (closed centres) 38,0 (open centres) 40,2 (pressured centres)

	FUNCTION
Ⓕ	**31** = Closed centres
	32 = Open centres
	33 = Pressured centres

Shifting time of pneumatic directional control valves or moving parts, logic devices were measured in accordance to ISO 12238:2001

	SOLENOID
Ⓢ	**M11** = 24V D.C. (rating power 3,8W)
	M56 = 24V 50/60Hz (starting power 9VA, rating power 6VA)
	M57 = 110 V 50/60Hz (starting power 9 A, rating power 6 A)
	M58 = 230V 50/60Hz (starting power 9VA, rating power 6VA)

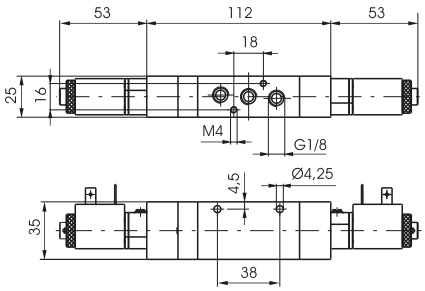

Weight 400 g
Minimum working pressure 3 bar

488.53.31.0.0.Ⓢ

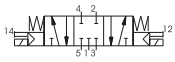

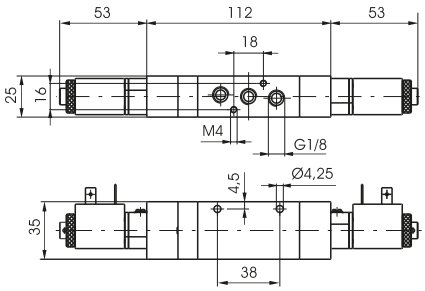

Weight 400 g
Minimum working pressure 3 bar

488.53.32.0.0.Ⓢ

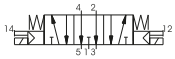

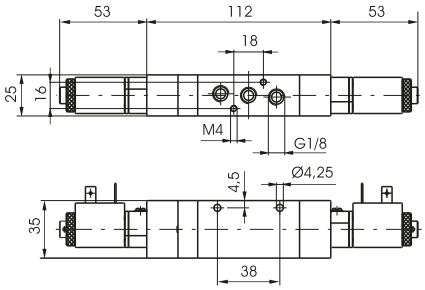

Weight 400 g
Minimum working pressure 3 bar

488.53.33.0.0.Ⓢ

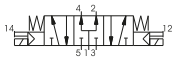

Collectors

Coding: 488.Ⓟ

	N. POSITIONS
Ⓟ	**02** = 2 positions (220 g)
	03 = 3 positions (290 g)
	04 = 4 positions (360 g)
	05 = 5 positions (430 g)
	06 = 6 positions (500 g)
	07 = 7 positions (570 g)
	08 = 8 positions (640 g)
	09 = 9 positions (710 g)
	10 = 10 positions (780 g)

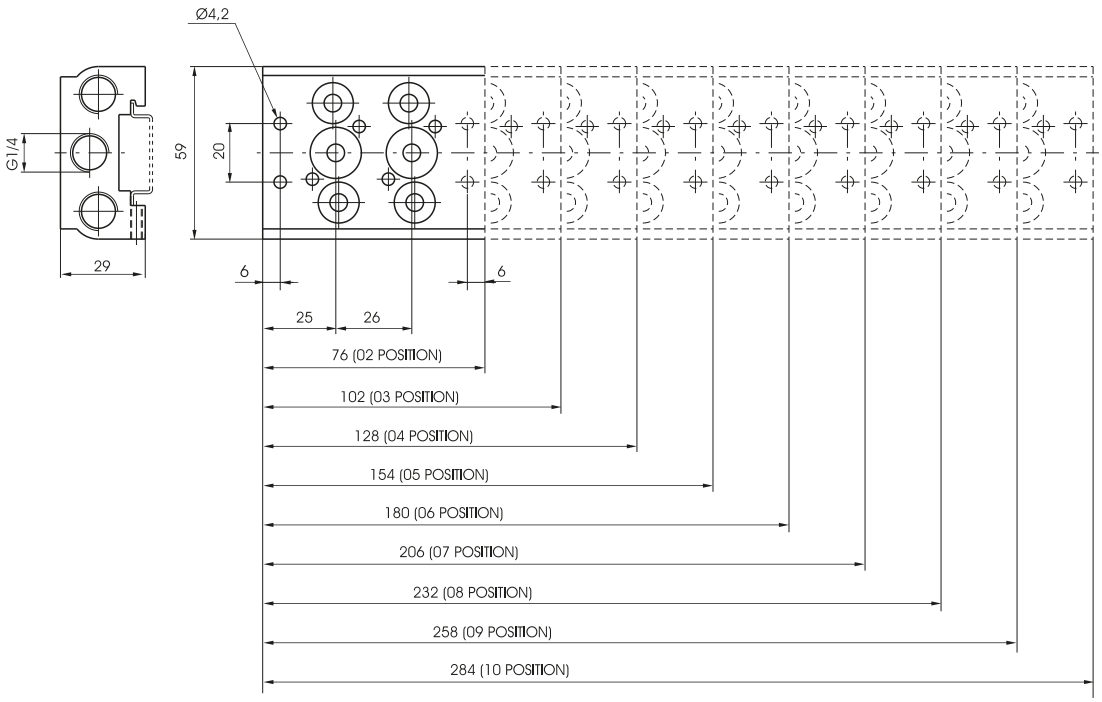

Closing plate

Coding: 488.00

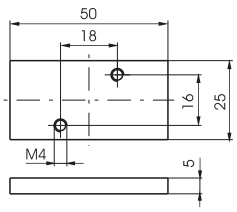

Weight 25 g

Overall dimensions and technical information are provided solely for informative purposes and may be modified without notice

Solenoid - Spring

Coding: 464.❶.0.1.M2

Operational characteristics	
Fluid	Filtered air. No lubrication needed, if applied it shall be continuous
Max working pressure (bar)	10
Temperature °C	-5 ÷ +50
Flow rate at 6 bar with Δp=1 (Nl/min)	1360
Orifice size (mm)	8
Working ports size	G 1/4"

	TYPE
❶	**32** = 3 ways
	52 = 5 ways

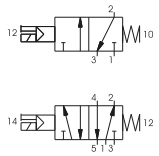

3 ways

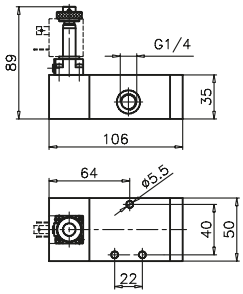

Weight 530 g
Minimum working pressure 2,5 bar

464.32.0.1.M2

5 ways

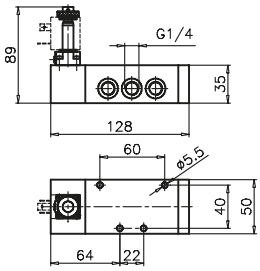

Weight 625 g
Minimum working pressure 2,5 bar

464.52.0.1.M2

Solenoid - Differential

Coding: 464.❶.0.12.M2

Operational characteristics	
Fluid	Filtered air. No lubrication needed, if applied it shall be continuous
Max working pressure (bar)	10
Temperature °C	-5 ÷ +50
Flow rate at 6 bar with Δp=1 (Nl/min)	1360
Orifice size (mm)	8
Working ports size	G 1/4"

	TYPE
❶	**32** = 3 ways
	52 = 5 ways

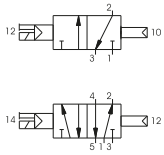

3 ways

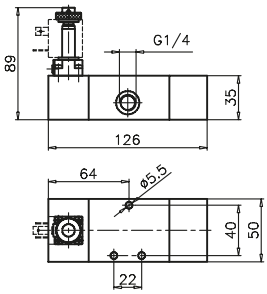

Weight 650 g
Minimum working pressure 2,5 bar

464.32.0.12.M2

5 ways

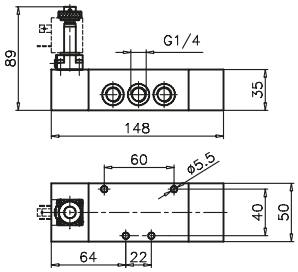

Weight 740 g
Minimum working pressure 2,5 bar

464.52.0.12.M2

Solenoid - Solenoid

Coding: 464.❶.0.0.M2

Operational characteristics	
Fluid	Filtered air. No lubrication needed, if applied it shall be continuous
Max working pressure (bar)	10
Temperature °C	-5 ÷ +50
Flow rate at 6 bar with Δp=1 (Nl/min)	1360
Orifice size (mm)	8
Working ports size	G 1/4"

	TYPE
❶	**32** = 3 ways
	52 = 5 ways

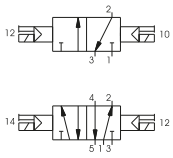

3 ways

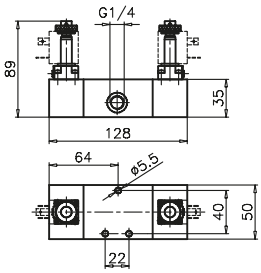

Weight 730 g
Minimum working pressure 2 bar

464.32.0.0.M2

5 ways 2 connections

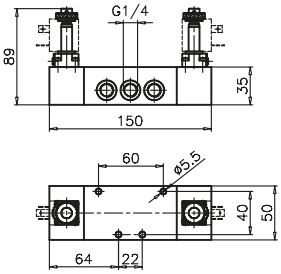

Weight 820 g
Minimum working pressure 2 bar

464.52.0.0.M2

Solenoid - Solenoid 5 ways 3 connections

Coding: 464.53.Ⓕ.0.0.M2

Operational characteristics	
Fluid	Filtered air. No lubrication needed, if applied it shall be continuous
Max working pressure (bar)	10
Temperature °C	-5 ÷ +50
Flow rate at 6 bar with Δp=1 (Nl/min)	1280
Orifice size (mm)	8
Working ports size	G 1/4"

	FUNCTION
Ⓕ	**31** = Closed centres
	32 = Open centres
	33 = Pressured centres

1

AIR DISTRIBUTION

5 ways 3 connections

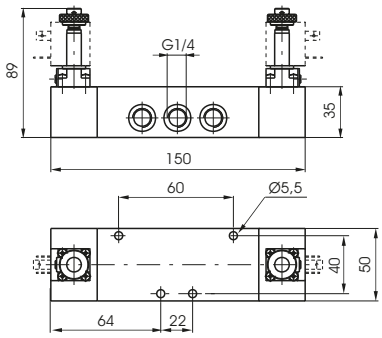

Weight 820 g
Minimum working pressure 3 bar

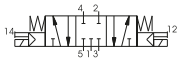

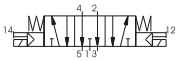

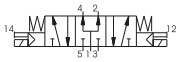

Overall dimensions and technical information are provided solely for informative purposes and may be modified without notice

Solenoid - Spring

Coding: 464/1.Ⓣ.0.1.M2

Operational characteristics	
Fluid	Filtered air. No lubrication needed, if applied it shall be continuous
Max working pressure (bar)	10
Temperature °C	-5 ÷ +50
Flow rate at 6 bar with Δp=1 (Nl/min)	1360
Orifice size (mm)	8
Working ports size	G 1/4"

	TYPE
Ⓣ	**32** = 3 ways
	52 = 5 ways

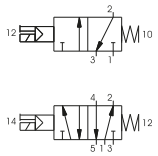

3 ways

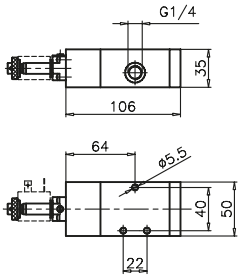

Weight 530 g
Minimum working pressure 2,5 bar

464/1.32.0.1.M2

5 ways

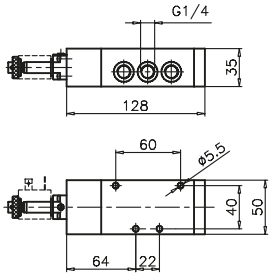

Weight 625 g
Minimum working pressure 2,5 bar

464/1.52.0.1.M2

Solenoid - Differential

Coding: 464/1.Ⓣ.0.12.M2

Operational characteristics	
Fluid	Filtered air. No lubrication needed, if applied it shall be continuous
Max working pressure (bar)	10
Temperature °C	-5 ÷ +50
Flow rate at 6 bar with Δp=1 (Nl/min)	1360
Orifice size (mm)	8
Working ports size	G 1/4"

	TYPE
Ⓣ	**32** = 3 ways
	52 = 5 ways

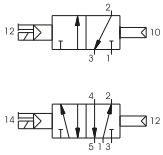

3 ways

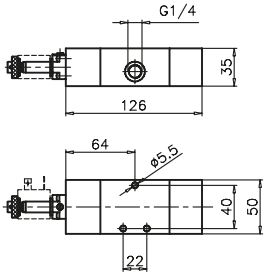

Weight 650 g
Minimum working pressure 2,5 bar

464/1.32.0.12.M2

5 ways

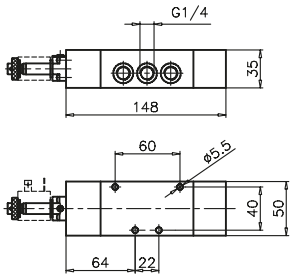

Weight 740 g
Minimum working pressure 2,5 bar

464/1.52.0.12.M2

Solenoid - Solenoid

Coding: 464/1.Ⓣ.0.0.M2

Operational characteristics	
Fluid	Filtered air. No lubrication needed, if applied it shall be continuous
Max working pressure (bar)	10
Temperature °C	-5 ÷ +50
Flow rate at 6 bar with Δp=1 (Nl/min)	1360
Orifice size (mm)	8
Working ports size	G 1/4"

	TYPE
Ⓣ	**32** = 3 ways
	52 = 5 ways

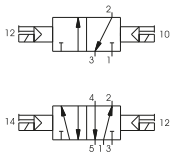

3 ways

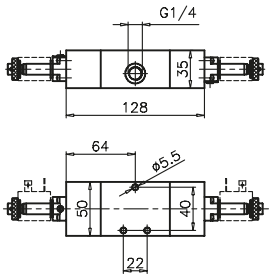

Weight 730 g
Minimum working pressure 2 bar

464/1.32.0.0.M2

5 ways 2 connections

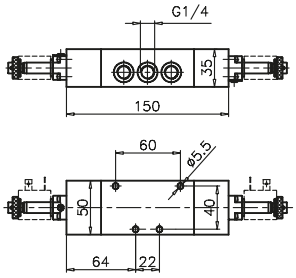

Weight 820 g
Minimum working pressure 2 bar

464/1.52.0.0.M2

Solenoid - Solenoid 5 ways 3 connections

Coding: 464/1.53.Ⓕ.0.0.M2

Operational characteristics	
Fluid	Filtered air. No lubrication needed, if applied it shall be continuous
Max working pressure (bar)	10
Temperature °C	-5 ÷ +50
Flow rate at 6 bar with Δp=1 (Nl/min)	1280
Orifice size (mm)	8
Working ports size	G 1/4"

	FUNCTION
Ⓕ	**31** = Closed centres
	32 = Open centres
	33 = Pressured centres

5 ways 3 connections

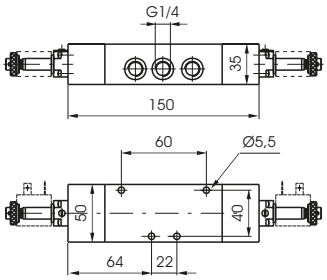

Weight 820 g
Minimum working pressure 3 bar

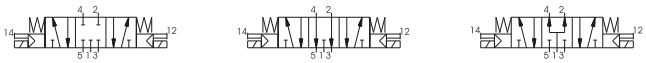

Overall dimensions and technical information are provided solely for informative purposes and may be modified without notice

Solenoid - Spring

Coding: 452.❶.0.1.M2

❶	TYPE
	32 = 3 ways
	52 = 5 ways

Operational characteristics	
Fluid	Filtered air. No lubrication needed, if applied it shall be continuous
Max working pressure (bar)	10
Temperature °C	-5 ÷ +50
Flow rate at 6 bar with Δp=1 (Nl/min)	3500
Orifice size (mm)	15
Working ports size	G 1/2"

Weight 1152 g
Minimum working pressure 2,5 bar

452.32.0.1.M2

Weight 1422 g
Minimum working pressure 2,5 bar

452.52.0.1.M2

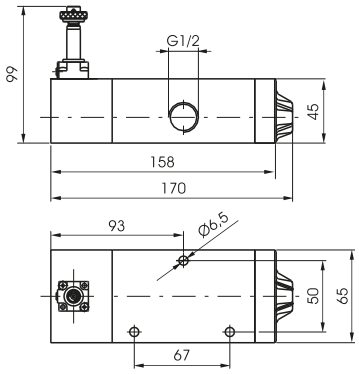

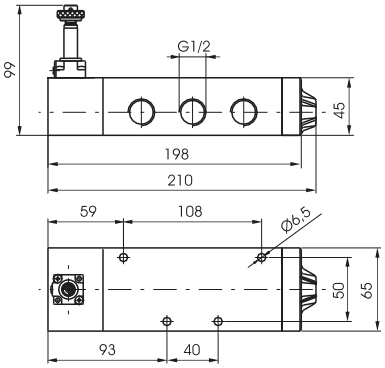

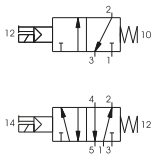

Solenoid - Differential

Coding: 452.❶.0.12.M2

❶	TYPE
	32 = 3 ways
	52 = 5 ways

Operational characteristics	
Fluid	Filtered air. No lubrication needed, if applied it shall be continuous
Max working pressure (bar)	10
Temperature °C	-5 ÷ +50
Flow rate at 6 bar with Δp=1 (Nl/min)	3500
Orifice size (mm)	15
Working ports size	G 1/2"

Weight 1422 g
Minimum working pressure 2,5 bar

452.32.0.12.M2

Weight 1692 g
Minimum working pressure 2 bar

452.52.0.12.M2

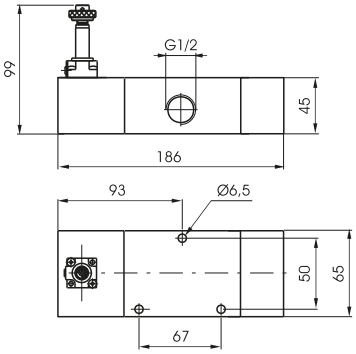

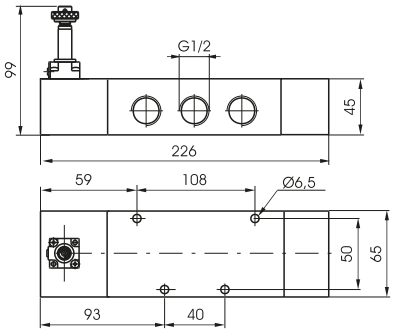

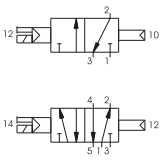

Solenoid - Solenoid

Coding: 452.Ⓣ.0.0.M2

Ⓣ	TYPE
	32 = 3 ways
	52 = 5 ways

Operational characteristics	
Fluid	Filtered air. No lubrication needed, if applied it shall be continuous
Max working pressure (bar)	10
Temperature °C	-5 ÷ +50
Flow rate at 6 bar with Δp=1 (Nl/min)	3500
Orifice size (mm)	15
Working ports size	G 1/2"

Weight 1474 g
Minimum working pressure 2 bar

452.32.0.0.M2

Weight 1744 g
Minimum working pressure 2 bar

452.52.0.0.M2

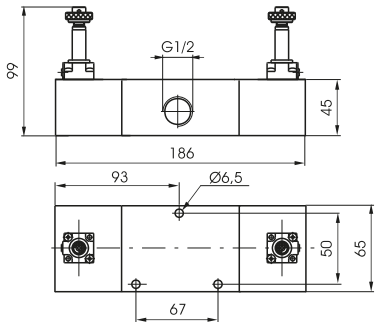

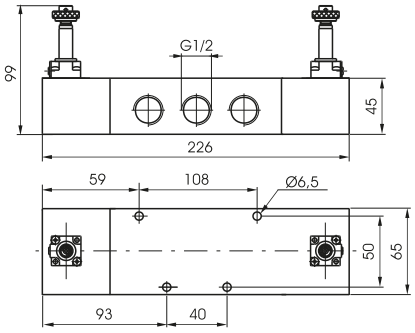

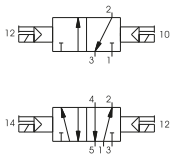

Solenoid - Solenoid 5 ways 3 connections

Coding: 452.53.Ⓕ.0.0.M2

Ⓕ	FUNCTION
	31 = Closed centres
	32 = Open centres
	33 = Pressured centres

Operational characteristics	
Fluid	Filtered air. No lubrication needed, if applied it shall be continuous
Max working pressure (bar)	10
Temperature °C	-5 ÷ +50
Flow rate at 6 bar with Δp=1 (Nl/min)	3500
Orifice size (mm)	15
Working ports size	G 1/2"

Weight 1744 g
Minimum working pressure 3 bar

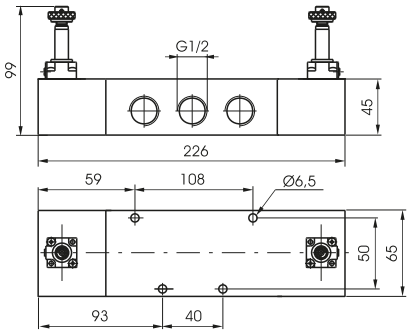

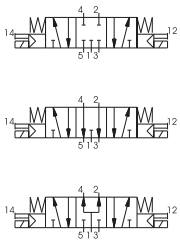

Overall dimensions and technical information are provided solely for informative purposes and may be modified without notice

Solenoid - Spring

Coding: 452/1.Ⓣ.0.1.M2

	TYPE
Ⓣ	**32** = 3 ways
	52 = 5 ways

Operational characteristics	
Fluid	Filtered air. No lubrication needed, if applied it shall be continuous
Max working pressure (bar)	10
Temperature °C	-5 ÷ +50
Flow rate at 6 bar with Δp=1 (Nl/min)	3500
Orifice size (mm)	15
Working ports size	G 1/2"

Weight 1330 g
Minimum working pressure 2,5 bar

452/1.32.0.1.M2

Weight 1600 g
Minimum working pressure 2,5 bar

452/1.52.0.1.M2

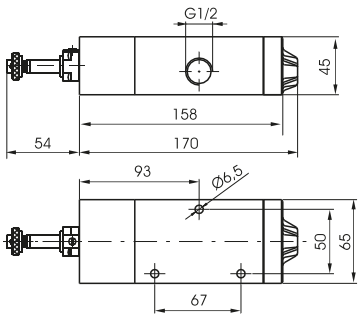

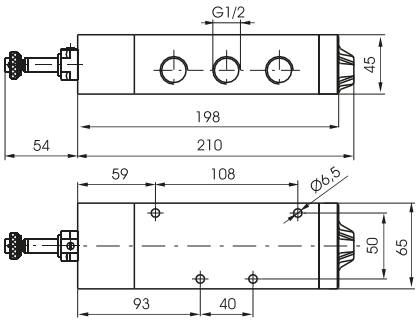

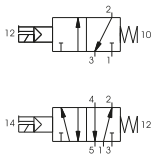

Solenoid - Differential

Coding: 452/1.Ⓣ.0.12.M2

	TYPE
Ⓣ	**32** = 3 ways
	52 = 5 ways

Operational characteristics	
Fluid	Filtered air. No lubrication needed, if applied it shall be continuous
Max working pressure (bar)	10
Temperature °C	-5 ÷ +50
Flow rate at 6 bar with Δp=1 (Nl/min)	3500
Orifice size (mm)	15
Working ports size	G 1/2"

Weight 1600 g
Minimum working pressure 2,5 bar

452/1.32.0.12.M2

Weight 1870 g
Minimum working pressure 2 bar

452/1.52.0.12.M2

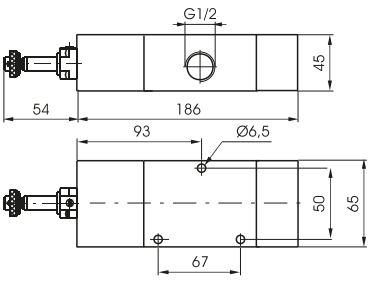

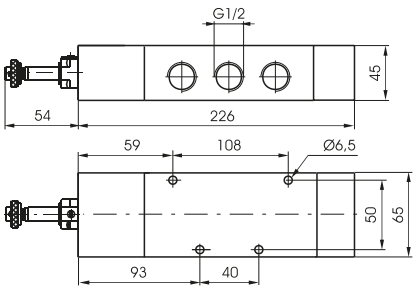

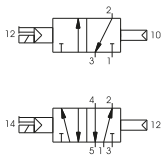

Solenoid - Solenoid

Coding: 452/1.Ⓣ.0.0.M2

Operational characteristics	
Fluid	Filtered air. No lubrication needed, if applied it shall be continuous
Max working pressure (bar)	10
Temperature °C	-5 ÷ +50
Flow rate at 6 bar with Δp=1 (Nl/min)	3500
Orifice size (mm)	15
Working ports size	G 1/2"

	TYPE
Ⓣ	**32** = 3 ways
	52 = 5 ways

Weight 1830 g
Minimum working pressure 2 bar

452/1.32.0.0.M2

Weight 2100 g
Minimum working pressure 2 bar

452/1.52.0.0.M2

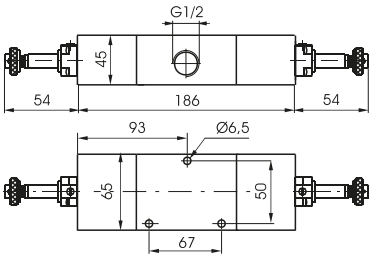

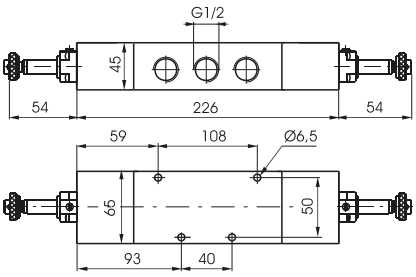

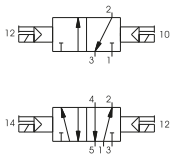

Solenoid - Solenoid 5 ways 3 connections

Coding: 452/1.53.Ⓕ.0.0.M2

Operational characteristics	
Fluid	Filtered air. No lubrication needed, if applied it shall be continuous
Max working pressure (bar)	10
Temperature °C	-5 ÷ +50
Flow rate at 6 bar with Δp=1 (Nl/min)	3500
Orifice size (mm)	15
Working ports size	G 1/2"

	FUNCTION
Ⓕ	**31** = Closed centres
	32 = Open centres
	33 = Pressured centres

Weight 2100 g
Minimum working pressure 3 bar

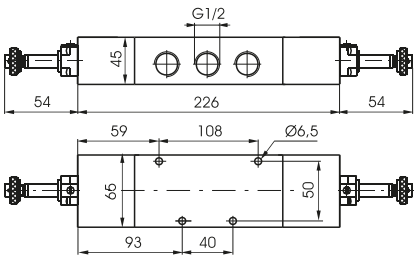

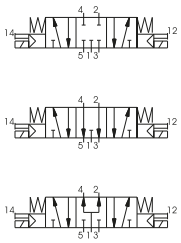

Overall dimensions and technical information are provided solely for informative purposes and may be modified without notice

Solenoid - Spring

Coding: 412/2.Ⓣ.0.1.Ⓕ.M2

Operational characteristics	
Fluid	Filtered air. No lubrication needed, if applied it shall be continuous
Max working pressure (bar)	10
Temperature °C	-5 ÷ +50
Flow rate at 6 bar with Δp=1 (Nl/min)	3600
Orifice size (mm)	15
Working ports size	G 1/2"

Ⓣ	TYPE
	32 = 3 ways
	52 = 5 ways
Ⓕ	FUNCTION (only for 3 ways)
	C = Normally Closed
	A = Normally Open

3 ways

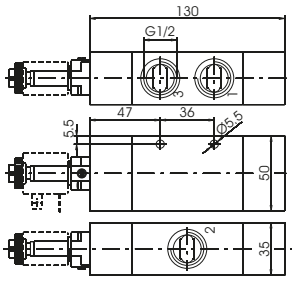

Weight 578 g
Minimum working pressure 2,5 bar

412/2.32.0.1.Ⓕ.M2

5 ways

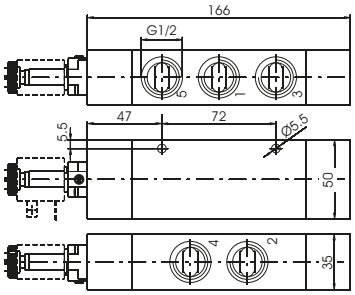

Weight 700 g
Minimum working pressure 2,5 bar

412/2.52.0.1.Ⓕ.M2

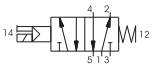

Solenoid - Differential external

Coding: 412/2.Ⓣ.0.12.Ⓕ.M2

Operational characteristics	
Fluid	Filtered air. No lubrication needed, if applied it shall be continuous
Max working pressure (bar)	10
Temperature °C	-5 ÷ +50
Flow rate at 6 bar with Δp=1 (Nl/min)	3600
Orifice size (mm)	15
Working ports size	G 1/2"

Ⓣ	TYPE
	32 = 3 ways
	52 = 5 ways
Ⓕ	FUNCTION (only for 3 ways)
	C = Normally Closed
	A = Normally Open

3 ways

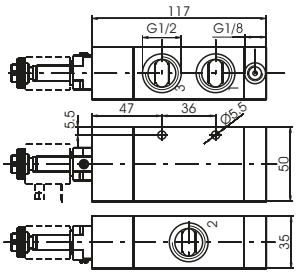

Weight 522 g
Minimum working pressure 2,5 bar

412/2.32.0.12.Ⓕ.M2

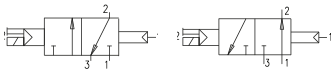

5 ways

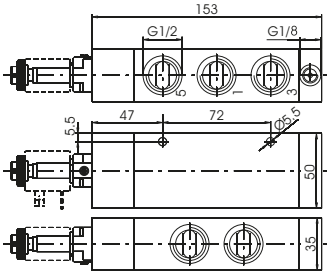

Weight 644 g
Minimum working pressure 2,5 bar

412/2.52.0.12.Ⓕ.M2

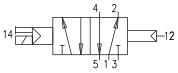

Pneumatic - Differential self aligned

Coding: 412/2.Ⓣ.0.12/1.Ⓕ.M2

Operational characteristics	
Fluid	Filtered air. No lubrication needed, if applied it shall be continuous
Max working pressure (bar)	10
Temperature °C	-5 ÷ +50
Flow rate at 6 bar with Δp=1 (Nl/min)	3600
Orifice size (mm)	15
Working ports size	G 1/2"

Ⓣ	TYPE
	32 = 3 ways
	52 = 5 ways
Ⓕ	FUNCTION (only for 3 ways)
	C = Normally Closed
	A = Normally Open

3 ways

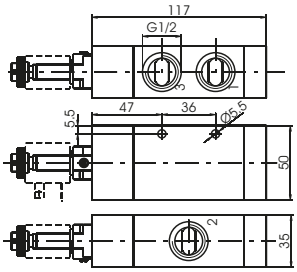

Weight 526 g
Minimum working pressure 2,5 bar

412/2.32.0.12/1.Ⓕ.M2

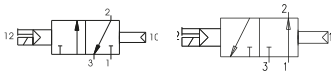

5 ways

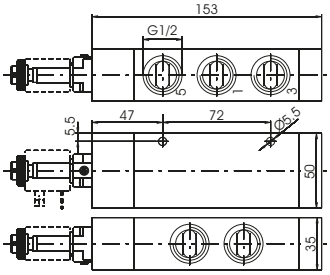

Weight 648 g
Minimum working pressure 2,5 bar

412/2.52.0.12/1.Ⓕ.M2

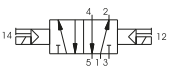

Solenoid - Solenoid

Coding: 412/2.Ⓣ.0.0.M2

Operational characteristics	
Fluid	Filtered air. No lubrication needed, if applied it shall be continuous
Max working pressure (bar)	10
Temperature °C	-5 ÷ +50
Flow rate at 6 bar with Δp=1 (Nl/min)	3600
Orifice size (mm)	15
Working ports size	G 1/2"

	TYPE
Ⓣ	**32** = 3 ways
	52 = 5 ways

3 ways

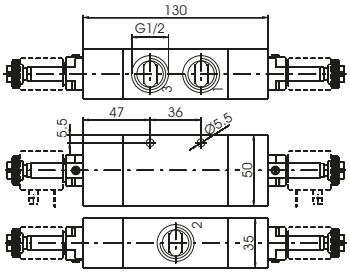

Weight 612 g
Minimum working pressure 2 bar

412/2.32.0.0.M2

5 ways 2 connections

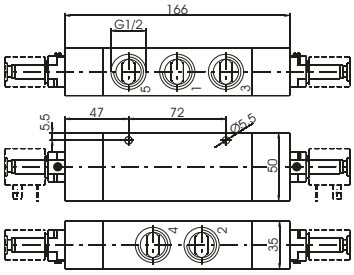

Weight 732 g
Minimum working pressure 2 bar

412/2.52.0.0.M2

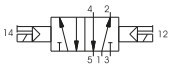

Solenoid - Solenoid 5 ways 3 connections

Coding: 412/2.53.Ⓕ.0.0.M2

Operational characteristics	
Fluid	Filtered air. No lubrication needed, if applied it shall be continuous
Max working pressure (bar)	10
Temperature °C	-5 ÷ +50
Flow rate at 6 bar with Δp=1 (Nl/min)	3300
Orifice size (mm)	15
Working ports size	G 1/2"

	FUNCTION
Ⓕ	**31** = Closed centres
	32 = Open centres
	33 = Pressured centres

5 ways 3 connections

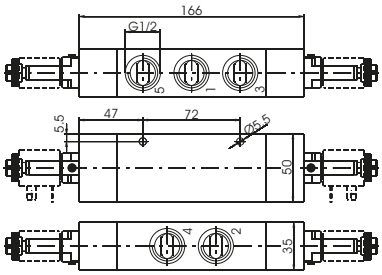

Weight 794 g
Minimum working pressure 3 bar

Overall dimensions and technical information are provided solely for informative purposes and may be modified without notice

Solenoid - Spring

Coding: 411.Ⓣ.0.1.Ⓢ

Operational characteristics	
Fluid	Filtered air. No lubrication needed, if applied it shall be continuous
Max working pressure (bar)	10
Temperature °C	-5 ÷ +50
Flow rate at 6 bar with Δp=1 (Nl/min)	6500
Orifice size (mm)	20
Working ports size	G 1"

Ⓣ	TYPE
	32 = 3 ways
	52 = 5 ways
Ⓢ	SOLENOID
	SEE SOLENOID VALVES "S" TYPE, SERIES 300

3 ways

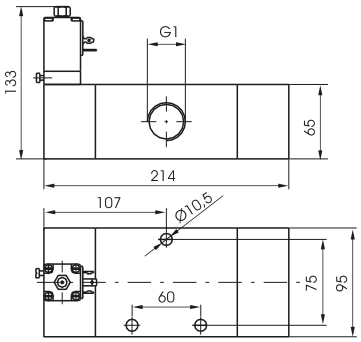

Weight 3400 g
Minimum working pressure 2,5 bar

411.32.0.1.Ⓢ

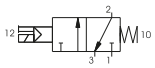

5 ways

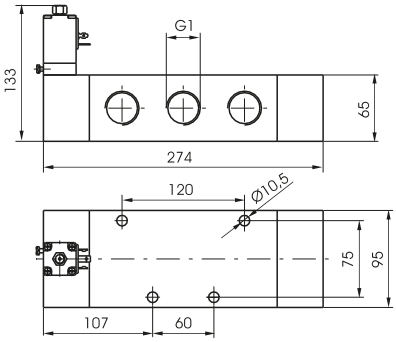

Weight 4300 g
Minimum working pressure 2,5 bar

411.52.0.1.Ⓢ

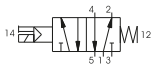

Solenoid - Differential

Coding: 411.Ⓣ.0.12.Ⓢ

Operational characteristics	
Fluid	Filtered air. No lubrication needed, if applied it shall be continuous
Max working pressure (bar)	10
Temperature °C	-5 ÷ +50
Flow rate at 6 bar with Δp=1 (Nl/min)	6500
Orifice size (mm)	20
Working ports size	G 1"

Ⓣ	TYPE
	32 = 3 ways
	52 = 5 ways
Ⓢ	SOLENOID
	SEE SOLENOID VALVES "S" TYPE, SERIES 300

3 ways

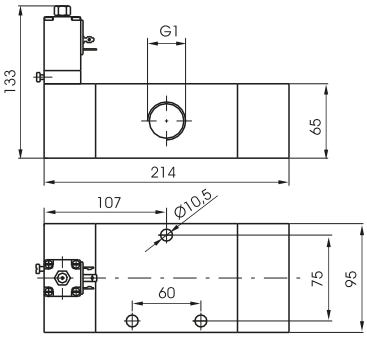

Weight 3400 g
Minimum working pressure 2,5 bar

411.32.0.12.Ⓢ

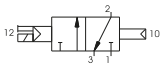

5 ways

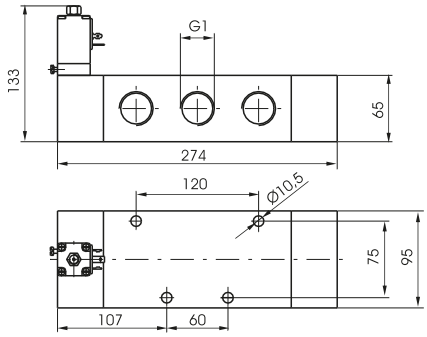

Weight 4300 g
Minimum working pressure 2,5 bar

411.52.0.12.Ⓢ

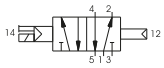

Solenoid - Solenoid

Coding: 411.Ⓣ.0.0.Ⓢ

Operational characteristics	
Fluid	Filtered air. No lubrication needed, if applied it shall be continuous
Max working pressure (bar)	10
Temperature °C	-5 ÷ +50
Flow rate at 6 bar with Δp=1 (Nl/min)	6500
Orifice size (mm)	20
Working ports size	G 1"

Ⓣ	TYPE
	32 = 3 ways
	52 = 5 ways
Ⓢ	SOLENOID
	SEE SOLENOID VALVES "S" TYPE, SERIES 300

3 ways

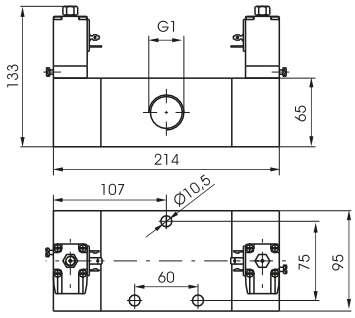

Weight 3700 g
Minimum working pressure 2 bar

411.32.0.0.Ⓢ

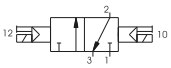

5 ways 2 connections

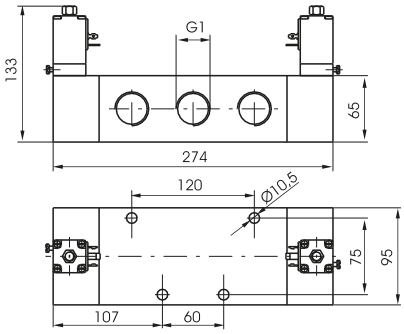

Weight 4600 g
Minimum working pressure 2 bar

411.52.0.0.Ⓢ

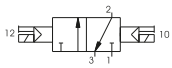

Solenoid - Solenoid 5 ways 3 connections

Coding: 411.53.Ⓕ.0.0.Ⓢ

Operational characteristics	
Fluid	Filtered air. No lubrication needed, if applied it shall be continuous
Max working pressure (bar)	10
Temperature °C	-5 ÷ +50
Flow rate at 6 bar with Δp=1 (Nl/min)	6500
Orifice size (mm)	20
Working ports size	G 1"

Ⓕ	FUNCTION
	31 = Closed centres
	32 = Open centres
	33 = Pressured centres
Ⓢ	SOLENOID
	SEE SOLENOID VALVES "S" TYPE, SERIES 300

5 ways 3 connections

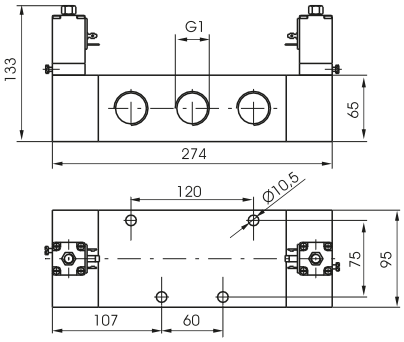

Weight 4700 g
Minimum working pressure 3 bar

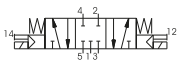

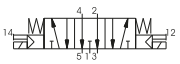

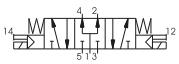

Overall dimensions and technical information are provided solely for informative purposes and may be modified without notice

Series T400

General

The Series **T400** involves a wide range of valves and solenoid valves, with several type of acting, with connections from **G1/8" (T488)** and **G1/4" (T424)**, are manufactured with high performance technopolimer.
The use of technopolymer has resulted in a light weight product which can be offered to the market at very interesting prices.
The gang mounted solenoid valves are available with the traditional manifold obtained from bored square bar of series 600 and with the extruded aluminium base allowing a unic inlet port conveying the exhausts. The base is also prearranged to be fixed on DIN 46277/3 guide.

The Valves and Solenoid valves **G1/8" (T488)** are: 5 ways function, pneumatically operated, single solenoid (monostable) mechanical or pneumatic spring return, spring or pneumatic return, with 2 coils (bistable) and in 5 ways 3 positions version with closed, open and pressured centres.
The solenoid valves are supplied complete with coil (see Series 300) so that the tension has to be added to the solenoid valve code:
M9 = Coil 24 V D.C. (rating power 2 watt)
M11 = Coil 24 V D.C. (rating power 3.8 watt)
M56 = Coil 24 V 50/60 HZ (starting power 9 VA, rating power 6 VA)
M57 = Coil 110 V 50/60 HZ (starting power 9 VA, rating power 6 VA)
M58 = Coil 220 V 50/60 HZ (starting power 9 VA, rating power 6 VA)

The Solenoid valves series **G1/4" (T424)**, are manufactured, depending on version and actuation (manual, pneumatic, or electrical), and self aligning (pneumatic - electric or spring) 3/2, 5/2 and 5/3 ways function, (monostable), (bistable).
The solenoid valves are supplied complete with coil so that the tension has to be added to the solenoid valve code.
B04 = coil 12V D.C.
B05 = coil 24V D.C.
B09 = coil 24V (2W) D.C.
B56 = coil 24V 50/60 Hz A.C.
B57 = coil 110V 50/60 Hz A.C.
B58 = coil 220V 50/60 Hz A.C.

Construction characteristics

Body	Technopolymer
Spacer	Technopolymer
Spacers	NBR
Piston seals	NBR
Springs	AISI 302 stainless steel
Operators	Technopolymer
Pistons	Technopolymer
Spools	Nickel - plated steel / Technopolymer

Maximum fitting torque

Thread	Maximum torque (Nm)
G 1/8"	4
G1/4"	9

Use and maintenance

This valves have an average life of 15 million cycles depending on the application and air quality.
Filtered and lubricated air using specified lubricants will reduce the wear of the seals and ensures long and trouble free operation.
Please ensure that the valve is being used according with the manufacturers specification, such as air pressure and temperature.
The exhaust port of the distributor has to be protected in a dusty and dirty environment.
Repair kits including the spool complete with seals are available for overhauling the valves.
However, although this is a simple operation it should be carried out by a competent person.

ATTENTION: use hydraulic oil class H for lubrication such as MAGNA GC 32 (Castrol).

Pneumatic - Spring

Coding: T488.Ⓣ.11.1

Operational characteristics	
Fluid	Filtered air. No lubrication needed, if applied it shall be continuous
Max working pressure (bar)	10
Temperature °C	-5 ÷ +50
Flow rate at 6 bar with Δp=1 (Nl/min)	620
Orifice size (mm)	6
Working ports size	G 1/8"

Ⓣ	TYPE
	32 = 3 ways
	52 = 5 ways

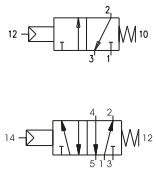

3 ways

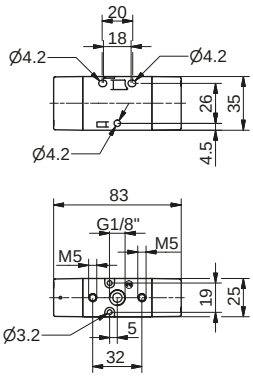

Weight 75 g
Minimum working pressure 2,5 bar

T488.32.11.1

5 ways

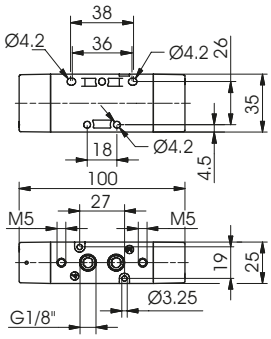

Weight 75 g
Minimum working pressure 2,5 bar

T488.52.11.1

Pneumatic - Differential (External)

Coding: T488.Ⓣ.11.12

Operational characteristics	
Fluid	Filtered air. No lubrication needed, if applied it shall be continuous
Max working pressure (bar)	10
Temperature °C	-5 ÷ +50
Flow rate at 6 bar with Δp=1 (Nl/min)	620
Orifice size (mm)	6
Working ports size	G 1/8"

Ⓣ	TYPE
	32 = 3 ways
	52 = 5 ways

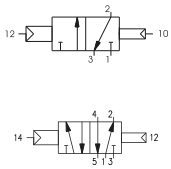

3 ways

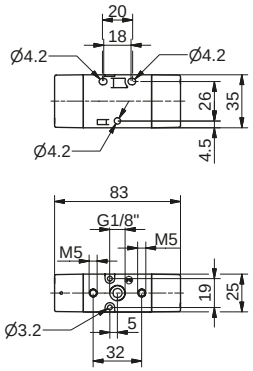

T488.32.11.12

5 ways

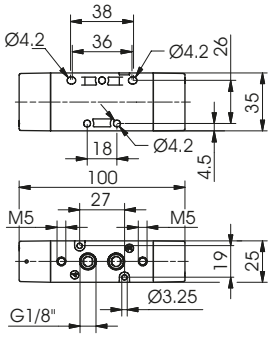

T488.52.11.12

Pneumatic - Pneumatic

Coding: T488.Ⓣ.11.11

Operational characteristics	
Fluid	Filtered air. No lubrication needed, if applied it shall be continuous
Max working pressure (bar)	10
Temperature °C	-5 ÷ +50
Flow rate at 6 bar with Δp=1 (Nl/min)	620
Orifice size (mm)	6
Working ports size	G 1/8"

Ⓣ	TYPE
	32 = 3 ways
	52 = 5 ways

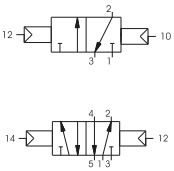

3 ways

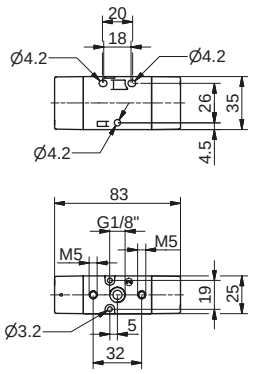

Minimum working pressure 2 bar (for Pneumatic-Pneumatic version)

T488.32.11.11

5 ways

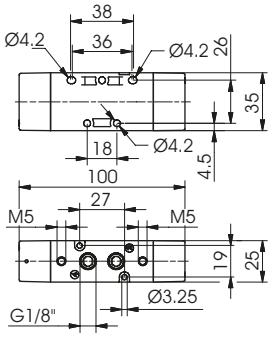

Minimum working pressure 2 bar (for Pneumatic-Pneumatic version)

T488.52.11.11

Overall dimensions and technical information are provided solely for informative purposes and may be modified without notice

Pneumatic - Pneumatic 5 ways 3 connections

Coding: T488.53.Ⓕ.11.11

Operational characteristics	
Fluid	Filtered air. No lubrication needed, if applied it shall be continuous
Max working pressure (bar)	10
Temperature °C	-5 ÷ +50
Flow rate at 6 bar with Δp=1 (Nl/min)	410
Orifice size (mm)	6
Working ports size	G 1/8"

	FUNCTION
Ⓕ	**31** = Closed centres
	32 = Open centres
	33 = Pressured centres

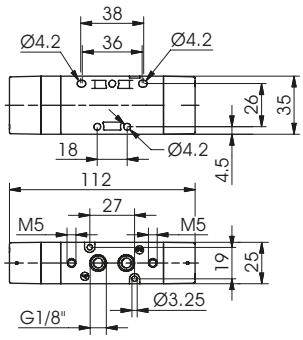

Weight 140 g
Minimum working pressure 3 bar (for Pneumatic-Pneumatic version)

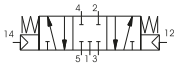

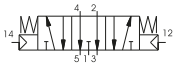

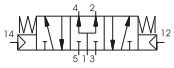

Solenoid - Spring (Self-feeding)

Coding: T488.Ⓣ.0.1.Ⓥ

Ⓣ	TYPE
	32 = 3 ways
	52 = 5 ways
Ⓥ	VOLTAGE
	M9 = Solenoid - Spring (Self-feeding)
	M11 = 24V D.C. (rating power 3,8W)
	M56 = 24V 50/60Hz (starting power 9VA, rating power 6VA)
	M57 = 110 V 50/60Hz (starting power 9VA, rating power 6VA)
	M58 = 230V 50/60Hz (starting power 9VA, rating power 6VA)

Operational characteristics	
Fluid	Filtered air. No lubrication needed, if applied it shall be continuous
Max working pressure (bar)	10
Temperature °C	-5 ÷ +50
Flow rate at 6 bar with Δp=1 (Nl/min)	620
Orifice size (mm)	6
Working ports size	G 1/8"
Responce time according to ISO 12238, activation time (ms)	23,4 (3 ways) 22,8 (5 ways)
Responce time according to ISO 12238, deactivation time (ms)	41,0 (3 ways) 44,5 (5 ways)

Shifting time of pneumatic directional control valves or moving parts, logic devices were measured in accordance to ISO 12238:2001

Weight 160 g
Minimum working pressure 2,5 bar

Weight 190 g
Minimum working pressure 2,5 bar

T488.32.0.1.Ⓥ

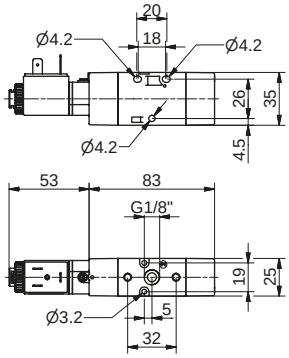

T488.52.0.1.Ⓥ

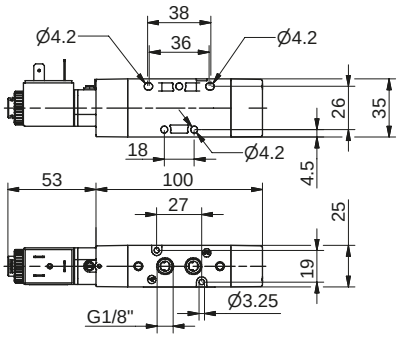

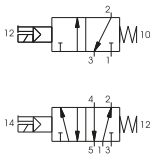

Solenoid - Spring (External-feeding)

Coding: T488.Ⓣ.0.1E.Ⓥ

Ⓣ	TYPE
	32 = 3 ways
	52 = 5 ways
Ⓥ	VOLTAGE
	M9 = Solenoid - Spring (Self-feeding)
	M11 = 24V D.C. (rating power 3,8W)
	M56 = 24V 50/60Hz (starting power 9VA, rating power 6VA)
	M57 = 110 V 50/60Hz (starting power 9VA, rating power 6VA)
	M58 = 230V 50/60Hz (starting power 9VA, rating power 6VA)

Operational characteristics	
Fluid	Filtered air. No lubrication needed, if applied it shall be continuous
Max working pressure (bar)	10
Temperature °C	-5 ÷ +50
Flow rate at 6 bar with Δp=1 (Nl/min)	620
Orifice size (mm)	6
Working ports size	G 1/8"
Responce time according to ISO 12238, activation time (ms)	23,4 (3 ways) 22,8 (5 ways)
Responce time according to ISO 12238, deactivation time (ms)	41,0 (3 ways) 44,5 (5 ways)

Shifting time of pneumatic directional control valves or moving parts, logic devices were measured in accordance to ISO 12238:2001

Weight 160 g
Minimum working pressure 2,5 bar

Weight 190 g
Minimum working pressure 2,5 bar

T488.32.0.1E.Ⓥ

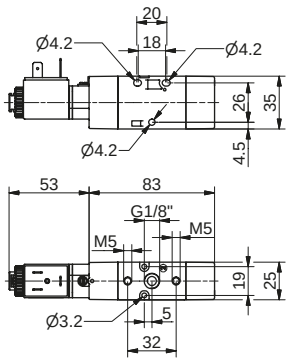

T488.52.0.1E.Ⓥ

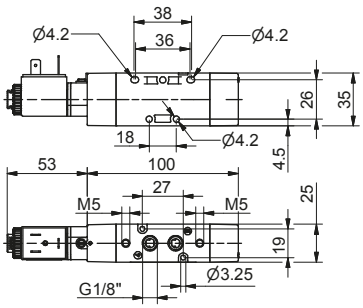

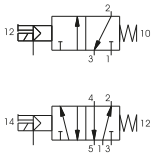

Overall dimensions and technical information are provided solely for informative purposes and may be modified without notice

Solenoid - Differential (Self-feeding)

Coding: T488.Ⓣ.0.12.Ⓥ

Ⓣ	TYPE
	32 = 3 ways
	52 = 5 ways
Ⓥ	VOLTAGE
	M9 = Solenoid - Spring (Self-feeding)
	M11 = 24V D.C. (rating power 3,8W)
	M56 = 24V 50/60Hz (starting power 9VA, rating power 6VA)
	M57 = 110 V 50/60Hz (starting power 9VA, rating power 6VA)
	M58 = 230V 50/60Hz (starting power 9VA, rating power 6VA)

Operational characteristics	
Fluid	Filtered air. No lubrication needed, if applied it shall be continuous
Max working pressure (bar)	10
Temperature °C	-5 ÷ +50
Flow rate at 6 bar with Δp=1 (Nl/min)	620
Orifice size (mm)	6
Working ports size	G 1/8"
Responce time according to ISO 12238, activation time (ms)	31,1 (3 ways) 27,9 (5 ways)
Responce time according to ISO 12238, deactivation time (ms)	35,0 (3 ways) 34,5 (5 ways)

Shifting time of pneumatic directional control valves or moving parts, logic devices were measured in accordance to ISO 12238:2001

Weight 160 g
Minimum working pressure 2,5 bar

Weight 190 g
Minimum working pressure 2,5 bar

T488.32.0.12.Ⓥ

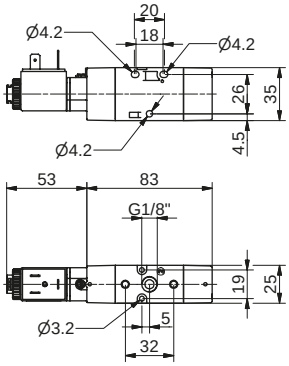

T488.52.0.12.Ⓥ

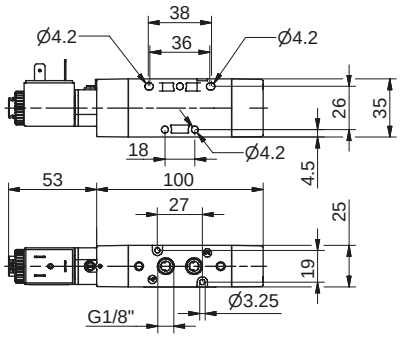

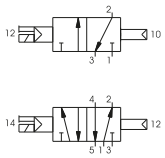

Solenoid - Differential (External-feeding)

Coding: T488.Ⓣ.0.12E.Ⓥ

Ⓣ	TYPE
	32 = 3 ways
	52 = 5 ways
Ⓥ	VOLTAGE
	M9 = Solenoid - Spring (Self-feeding)
	M11 = 24V D.C. (rating power 3,8W)
	M56 = 24V 50/60Hz (starting power 9VA, rating power 6VA)
	M57 = 110 V 50/60Hz (starting power 9VA, rating power 6VA)
	M58 = 230V 50/60Hz (starting power 9VA, rating power 6VA)

Operational characteristics	
Fluid	Filtered air. No lubrication needed, if applied it shall be continuous
Max working pressure (bar)	10
Temperature °C	-5 ÷ +50
Flow rate at 6 bar with Δp=1 (Nl/min)	620
Orifice size (mm)	6
Working ports size	G 1/8"
Responce time according to ISO 12238, activation time (ms)	31,1 (3 ways) 27,9 (5 ways)
Responce time according to ISO 12238, deactivation time (ms)	35,0 (3 ways) 34,5 (5 ways)

Shifting time of pneumatic directional control valves or moving parts, logic devices were measured in accordance to ISO 12238:2001

Weight 160 g
Minimum working pressure 2,5 bar

Weight 190 g
Minimum working pressure 2,5 bar

T488.32.0.12E.Ⓥ

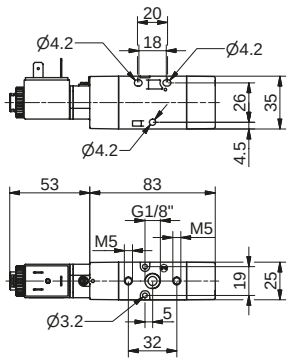

T488.52.0.12E.Ⓥ

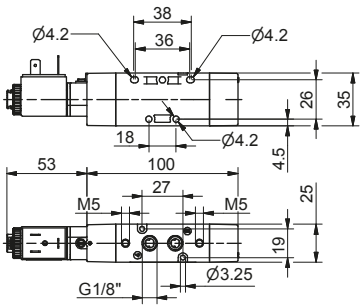

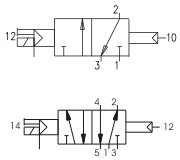

Solenoid - Solenoid (Self-feeding)

Coding: T488.Ⓣ.0.0.Ⓥ

Ⓣ	TYPE
	32 = 3 ways
	52 = 5 ways
Ⓥ	VOLTAGE
	M9 = Solenoid - Spring (Self-feeding)
	M11 = 24V D.C. (rating power 3,8W)
	M56 = 24V 50/60Hz (starting power 9VA, rating power 6VA)
	M57 = 110 V 50/60Hz (starting power 9VA, rating power 6VA)
	M58 = 230V 50/60Hz (starting power 9VA, rating power 6VA)

Operational characteristics	
Fluid	Filtered air. No lubrication needed, if applied it shall be continuous
Max working pressure (bar)	10
Temperature °C	-5 ÷ +50
Flow rate at 6 bar with Δp=1 (Nl/min)	620
Orifice size (mm)	6
Working ports size	G 1/8"
Responce time according to ISO 12238, activation time (ms)	18,8 (3 ways) 18,0 (5 ways)
Responce time according to ISO 12238, deactivation time (ms)	18,0 (3 ways) 19,1 (5 ways)

Shifting time of pneumatic directional control valves or moving parts, logic devices were measured in accordance to ISO 12238:2001

Weight 250 g
Minimum working pressure 2 bar

Weight 290 g
Minimum working pressure 2 bar

T488.32.0.0.Ⓥ

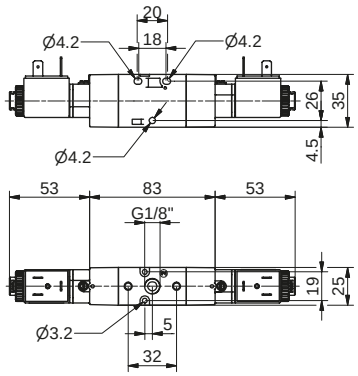

T488.52.0.0.Ⓥ

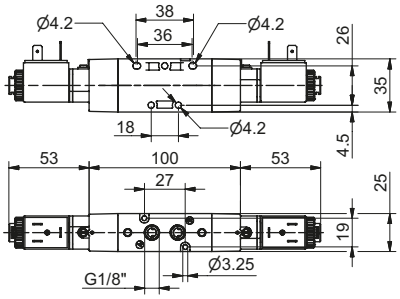

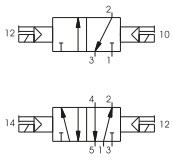

Solenoid - Solenoid (External-feeding)

Coding: T488.Ⓣ.0.0E.Ⓥ

Ⓣ	TYPE
	32 = 3 ways
	52 = 5 ways
Ⓥ	VOLTAGE
	M9 = Solenoid - Spring (Self-feeding)
	M11 = 24V D.C. (rating power 3,8W)
	M56 = 24V 50/60Hz (starting power 9VA, rating power 6VA)
	M57 = 110 V 50/60Hz (starting power 9VA, rating power 6VA)
	M58 = 230V 50/60Hz (starting power 9VA, rating power 6VA)

Operational characteristics	
Fluid	Filtered air. No lubrication needed, if applied it shall be continuous
Max working pressure (bar)	10
Temperature °C	-5 ÷ +50
Flow rate at 6 bar with Δp=1 (Nl/min)	620
Orifice size (mm)	6
Working ports size	G 1/8"
Responce time according to ISO 12238, activation time (ms)	18,8 (3 ways) 18,0 (5 ways)
Responce time according to ISO 12238, deactivation time (ms)	18,0 (3 ways) 19,1 (5 ways)

Shifting time of pneumatic directional control valves or moving parts, logic devices were measured in accordance to ISO 12238:2001

Weight 250 g
Minimum working pressure 2 bar

Weight 290 g
Minimum working pressure 2 bar

T488.32.0.0E.Ⓥ

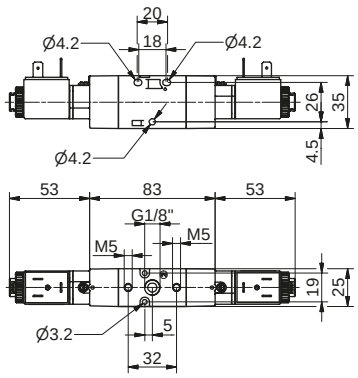

T488.52.0.0E.Ⓥ

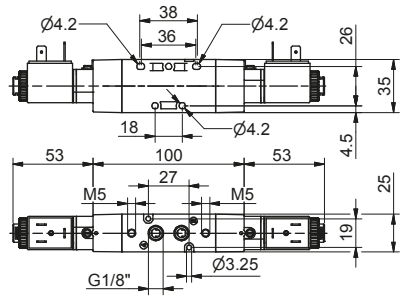

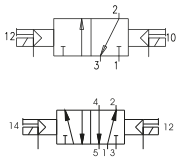

Overall dimensions and technical information are provided solely for informative purposes and may be modified without notice

Solenoid - Solenoid 5 ways 3 connections (Self-feeding)

Coding: T488.53.Ⓕ.0.0.Ⓥ

Operational characteristics	
Fluid	Filtered air. No lubrication needed, if applied it shall be continuous
Max working pressure (bar)	10
Temperature °C	-5 ÷ +50
Flow rate at 6 bar with Δp=1 (Nl/min)	410
Orifice size (mm)	6
Working ports size	G 1/8"
Responce time according to ISO 12238, activation time (ms)	21,3 (closed centres) 21,5 (open centres) 19,5 (pressured centres)
Responce time according to ISO 12238, deactivation time (ms)	37,0 (closed centres) 34,5 (open centres) 37,3 (pressured centres)

Shifting time of pneumatic directional control valves or moving parts, logic devices were measured in accordance to ISO 12238:2001

Ⓕ	FUNCTION
	31 = Closed centres
	32 = Open centres
	33 = Pressured centres
Ⓥ	VOLTAGE
	M9 = Solenoid - Spring (Self-feeding)
	M11 = 24V D.C. (rating power 3,8W)
	M56 = 24V 50/60Hz (starting power 9VA, rating power 6VA)
	M57 = 110 V 50/60Hz (starting power 9VA, rating power 6VA)
	M58 = 230V 50/60Hz (starting power 9VA, rating power 6VA)

Minimum working pressure 3 bar
Weight 330 g

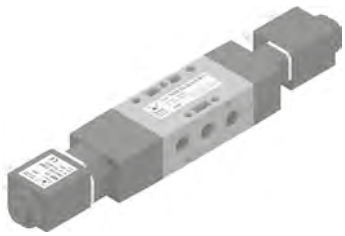

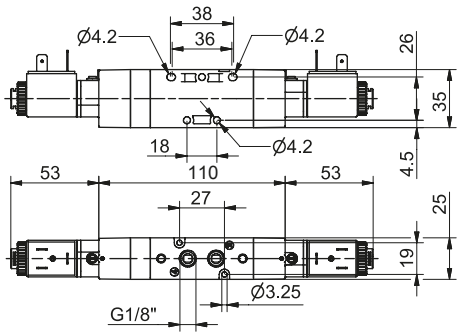

T488.53.31.0.0.Ⓥ

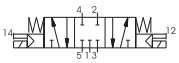

T488.53.32.0.0.Ⓥ

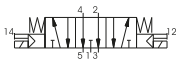

T488.53.33.0.0.Ⓥ

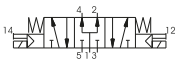

Solenoid - Solenoid 5/3 (External-feeding)

Coding: T488.53.Ⓕ.0E.Ⓥ

Operational characteristics	
Fluid	Filtered air. No lubrication needed, if applied it shall be continuous
Max working pressure (bar)	10
Temperature °C	-5 ÷ +50
Flow rate at 6 bar with Δp=1 (Nl/min)	410
Orifice size (mm)	6
Working ports size	G 1/8"
Responce time according to ISO 12238, activation time (ms)	21,3 (closed centres) 21,5 (open centres) 19,5 (pressured centres)
Responce time according to ISO 12238, deactivation time (ms)	37,0 (closed centres) 34,5 (open centres) 37,3 (pressured centres)

Shifting time of pneumatic directional control valves or moving parts, logic devices were measured in accordance to ISO 12238:2001

Ⓕ	FUNCTION
	31 = Closed centres
	32 = Open centres
	33 = Pressured centres
Ⓥ	VOLTAGE
	M9 = Solenoid - Spring (Self-feeding)
	M11 = 24V D.C. (rating power 3,8W)
	M56 = 24V 50/60Hz (starting power 9VA, rating power 6VA)
	M57 = 110 V 50/60Hz (starting power 9VA, rating power 6VA)
	M58 = 230V 50/60Hz (starting power 9VA, rating power 6VA)

Minimum working pressure 3 bar
Weight 330 g

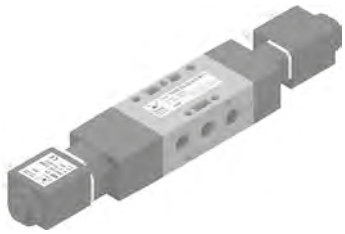

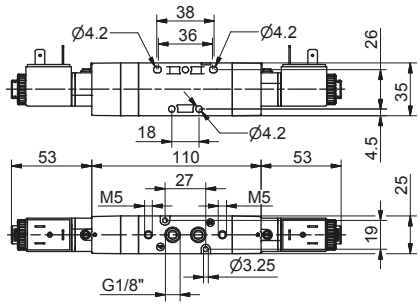

T488.53.31.0.0E.Ⓥ

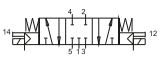

T488.53.32.0.0E.Ⓥ

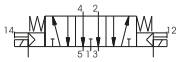

T488.53.33.0.0E.Ⓥ

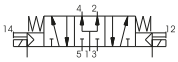

Collectors

Coding: T488.Ⓟ

	N. POSITIONS
Ⓟ	**02** = 2 positions (220 g)
	03 = 3 positions (290 g)
	04 = 4 positions (360 g)
	05 = 5 positions (430 g)
	06 = 6 positions (500 g)
	07 = 7 positions (570 g)
	08 = 8 positions (640 g)
	09 = 9 positions (710 g)
	10 = 10 positions (780 g)

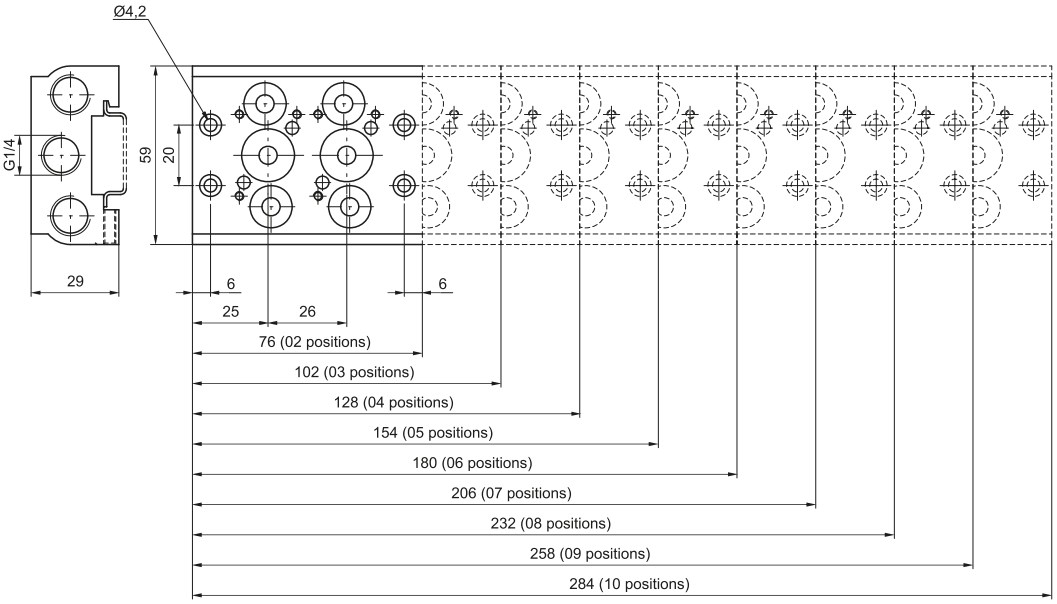

Modular base

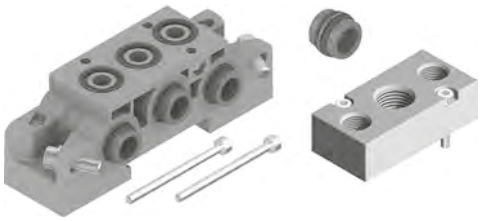

Coding: T488.Ⓣ

	TYPE
Ⓣ	**01** = Single complete base
	01K = Complete modular bases (batches of 20 pieces)
	30K = Hollow bush, complete with O-rings (Nr. 50 pieces)
	31K = Blank bush, complete with O-rings (Nr. 50 pieces)
	32K = Intermediate air intake with screw (Nr. 5 pieces)
	33 = Screw to suite solenoid valves (Nr. 50 pieces)
	34 = Screw for joning bases (Nr. 50 pieces)
	35 = Washer for screw for joning bases (Nr. 50 pieces)
	36 = OR (50 pz)

Closing plate

Coding: T488.00

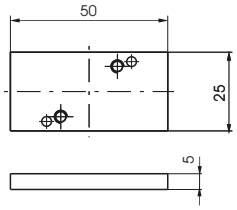

weight 25

Overall dimensions and technical information are provided solely for informative purposes and may be modified without notice

Solenoid - Spring (Self-feeding)

Coding: T424.Ⓣ.0.1.Ⓥ

Operational characteristics	
Fluid	Filtered air. No lubrication needed, if applied it shall be continuous
Max working pressure (bar)	10
Temperature °C	-5 ÷ +50
Flow rate at 6 bar with Δp=1 (Nl/min)	1050
Orifice size (mm)	8.5
Working ports size	G 1/4"

Ⓣ	TYPE	
	32 =	3 ways
	52 =	5 ways
Ⓥ	VOLTAGE	
	B04 =	12 V DC
	B05 =	24 V DC
	B09 =	24 V DC (2 W)
	B56 =	24 V 50-60 Hz
	B57 =	110 V 50-60 Hz
	B58 =	230 V 50-60 Hz

Weight 205 g
Minimum piloting pressure 2,5 bar

Weight 235 g
Minimum piloting pressure 2,5 bar

T424.32.0.1.Ⓥ

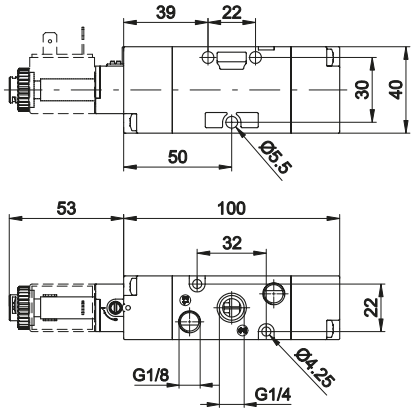

T424.52.0.1.Ⓥ

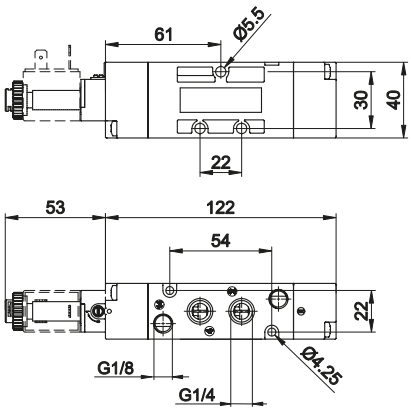

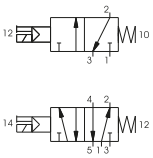

Solenoid - Spring (External-feeding)

Coding: T424.Ⓣ.0.1.E.Ⓥ

Operational characteristics	
Fluid	Filtered air. No lubrication needed, if applied it shall be continuous
Max working pressure (bar)	10
Temperature °C	-5 ÷ +50
Flow rate at 6 bar with Δp=1 (Nl/min)	1050
Orifice size (mm)	8.5
Working ports size	G 1/4"
Pilot ports size	G 1/8"

Ⓣ	TYPE	
	32 =	3 ways
	52 =	5 ways
Ⓥ	VOLTAGE	
	B04 =	12 V DC
	B05 =	24 V DC
	B09 =	24 V DC (2 W)
	B56 =	24 V 50-60 Hz
	B57 =	110 V 50-60 Hz
	B58 =	230 V 50-60 Hz

Weight 205 g
Minimum piloting pressure 2,5 bar

Weight 235 g
Minimum piloting pressure 2,5 bar

T424.32.0.1.E.Ⓥ

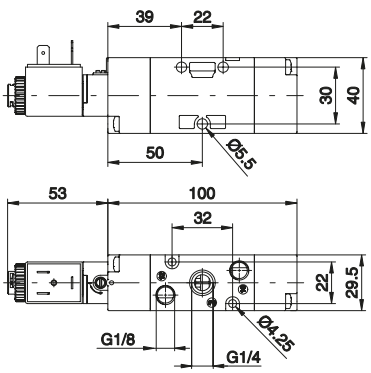

T424.52.0.1.E.Ⓥ

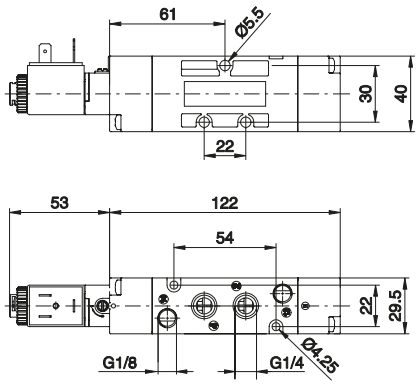

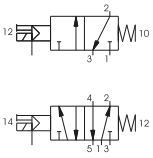

Solenoid - Differential (Self-feeding)

Coding: T424.Ⓣ.0.12.Ⓥ

Operational characteristics	
Fluid	Filtered air. No lubrication needed, if applied it shall be continuous
Max working pressure (bar)	10
Temperature °C	-5 ÷ +50
Flow rate at 6 bar with Δp=1 (Nl/min)	1050
Orifice size (mm)	8.5
Working ports size	G 1/4"

Ⓣ	TYPE	
	32 = 3 ways	
	52 = 5 ways	
Ⓥ	VOLTAGE	
	B04 =	12 V DC
	B05 =	24 V DC
	B09 =	24 V DC (2 W)
	B56 =	24 V 50-60 Hz
	B57 =	110 V 50-60 Hz
	B58 =	230 V 50-60 Hz

Weight 205 g
Minimum piloting pressure 2 bar

T424.32.0.12.Ⓥ

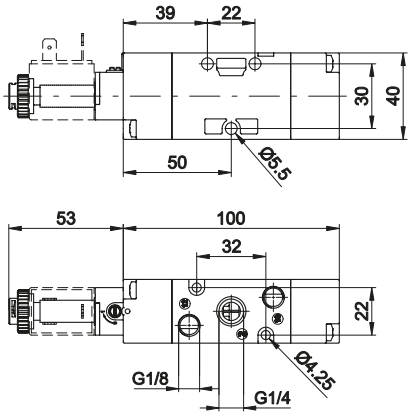

Weight 235 g
Minimum piloting pressure 2 bar

T424.52.0.12.Ⓥ

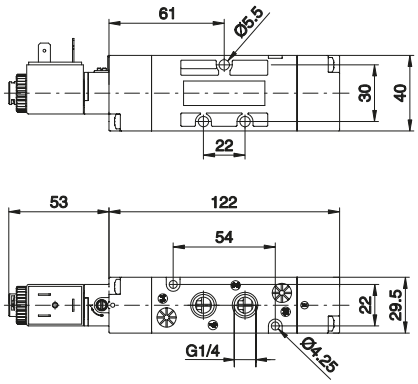

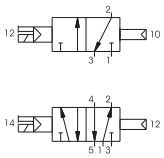

Solenoid - Differential (External-feeding)

Coding: T424.Ⓣ.0.12.E.Ⓥ

Operational characteristics	
Fluid	Filtered air. No lubrication needed, if applied it shall be continuous
Max working pressure (bar)	10
Temperature °C	-5 ÷ +50
Flow rate at 6 bar with Δp=1 (Nl/min)	1050
Orifice size (mm)	8.5
Working ports size	G 1/4"
Pilot ports size	G 1/8"

Ⓣ	TYPE	
	32 = 3 ways	
	52 = 5 ways	
Ⓥ	VOLTAGE	
	B04 =	12 V DC
	B05 =	24 V DC
	B09 =	24 V DC (2 W)
	B56 =	24 V 50-60 Hz
	B57 =	110 V 50-60 Hz
	B58 =	230 V 50-60 Hz

Weight 205 g
Minimum piloting pressure 2 bar

T424.32.0.12.E.Ⓥ

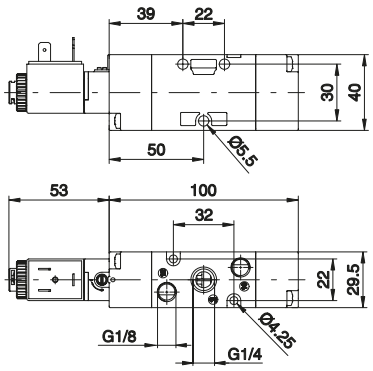

Weight 235 g
Minimum piloting pressure 2 bar

T424.52.0.12.E.Ⓥ

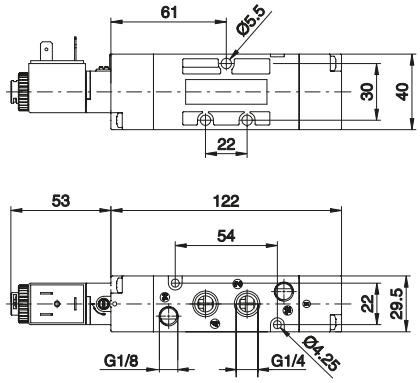

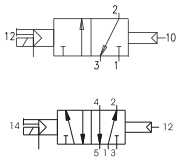

Overall dimensions and technical information are provided solely for informative purposes and may be modified without notice

Solenoid - Solenoid (Self-feeding)

Coding: T424.Ⓣ.0.0.Ⓥ

Operational characteristics	
Fluid	Filtered air. No lubrication needed, if applied it shall be continuous
Max working pressure (bar)	10
Temperature °C	-5 ÷ +50
Flow rate at 6 bar with Δp=1 (Nl/min)	1050
Orifice size (mm)	8.5
Working ports size	G 1/4"

Ⓣ	TYPE	
	32 =	3 ways
	52 =	5 ways
Ⓥ	VOLTAGE	
	B04 =	12 V DC
	B05 =	24 V DC
	B09 =	24 V DC (2 W)
	B56 =	24 V 50-60 Hz
	B57 =	110 V 50-60 Hz
	B58 =	230 V 50-60 Hz

Weight 240 g
Minimum piloting pressure 2 bar

T424.32.0.0.Ⓥ

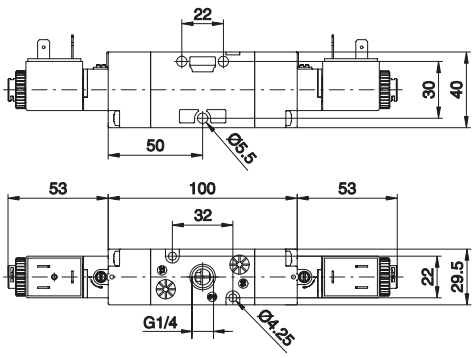

Weight 270 g
Minimum piloting pressure 2 bar

T424.52.0.0.Ⓥ

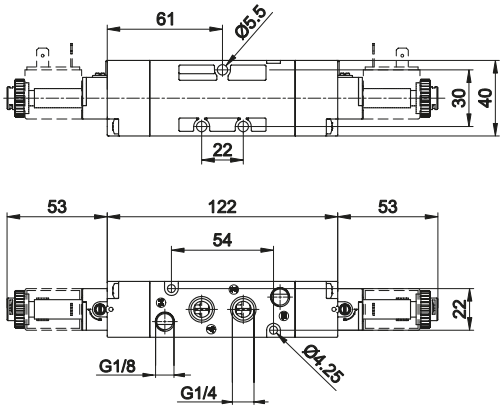

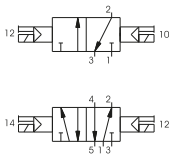

Solenoid - Solenoid (External-feeding)

Coding: T424.Ⓣ.0.0.E.Ⓥ

Operational characteristics	
Fluid	Filtered air. No lubrication needed, if applied it shall be continuous
Max working pressure (bar)	10
Temperature °C	-5 ÷ +50
Flow rate at 6 bar with Δp=1 (Nl/min)	1050
Orifice size (mm)	8.5
Working ports size	G 1/4"
Pilot ports size	G 1/8"

Ⓣ	TYPE	
	32 =	3 ways
	52 =	5 ways
Ⓥ	VOLTAGE	
	B04 =	12 V DC
	B05 =	24 V DC
	B09 =	24 V DC (2 W)
	B56 =	24 V 50-60 Hz
	B57 =	110 V 50-60 Hz
	B58 =	230 V 50-60 Hz

Weight 240 g
Minimum piloting pressure 2 bar

T424.32.0.0.E.Ⓥ

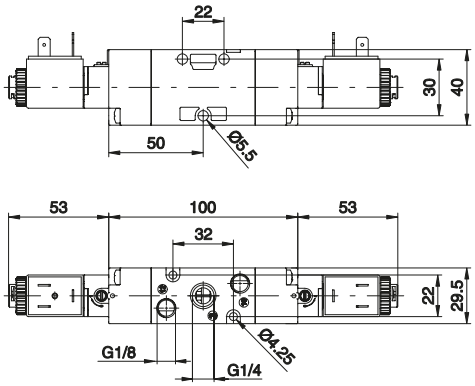

Weight 270 g
Minimum piloting pressure 2 bar

T424.52.0.0.E.Ⓥ

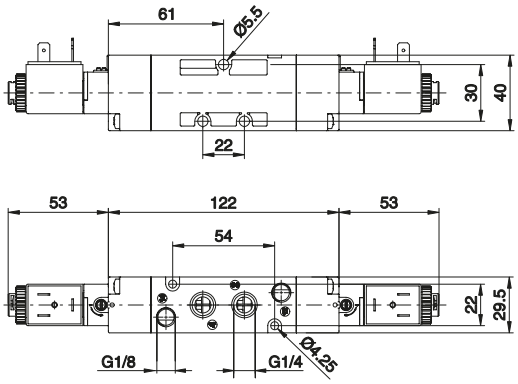

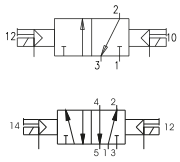

Solenoid - Solenoid (Self-feeding)

Coding: T424.53.Ⓕ.0.0.Ⓥ

Operational characteristics	
Fluid	Filtered air. No lubrication needed, if applied it shall be continuous
Max working pressure (bar)	10
Temperature °C	-5 ÷ +50
Flow rate at 6 bar with Δp=1 (Nl/min)	900
Orifice size (mm)	8.5
Working ports size	G 1/4"

Ⓕ	FUNCTION	
	31 =	Closed centres
	32 =	Open centres
	33 =	Pressured centres
Ⓥ	VOLTAGE	
	B04 =	12 V DC
	B05 =	24 V DC
	B09 =	24 V DC (2 W)
	B56 =	24 V 50-60 Hz
	B57 =	110 V 50-60 Hz
	B58 =	230 V 50-60 Hz

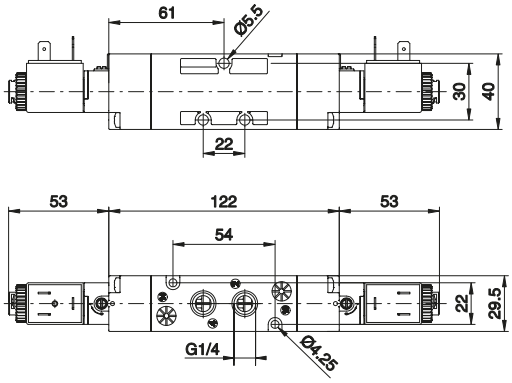

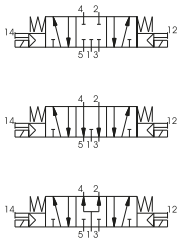

Weight 295 g
Minimum piloting pressure 3 bar

Solenoid - Solenoid (External-feeding)

Coding: T424.53.Ⓕ.0.0.E.Ⓥ

Operational characteristics	
Fluid	Filtered air. No lubrication needed, if applied it shall be continuous
Max working pressure (bar)	10
Temperature °C	-5 ÷ +50
Flow rate at 6 bar with Δp=1 (Nl/min)	900
Orifice size (mm)	8.5
Working ports size	G 1/4"
Pilot ports size	G 1/8"

Ⓕ	FUNCTION	
	31 =	Closed centres
	32 =	Open centres
	33 =	Pressured centres
Ⓥ	VOLTAGE	
	B04 =	12 V DC
	B05 =	24 V DC
	B09 =	24 V DC (2 W)
	B56 =	24 V 50-60 Hz
	B57 =	110 V 50-60 Hz
	B58 =	230 V 50-60 Hz

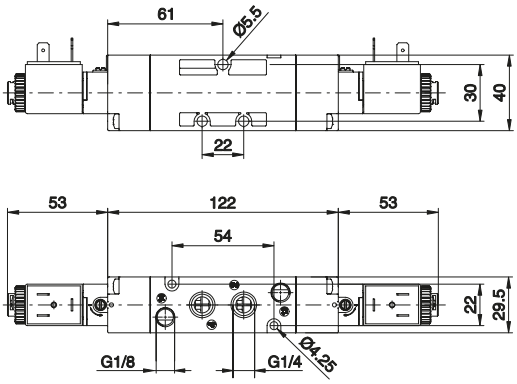

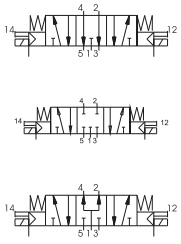

Weight 295 g
Minimum piloting pressure 3 bar

Overall dimensions and technical information are provided solely for informative purposes and may be modified without notice

Collectors

Coding: T424.Ⓝ

Ⓝ	N. POSITIONS
	02 = 2 positions (weight 350 g)
	03 = 3 positions (weight 420 g)
	04 = 4 positions (weight 560 g)
	05 = 5 positions (weight 670 g)
	06 = 6 positions (weight 770 g)
	07 = 7 positions (weight 880 g)
	08 = 8 positions (weight 980 g)
	09 = 9 positions (weight 1090 g)
	10 = 10 positions (weight 1200 g)

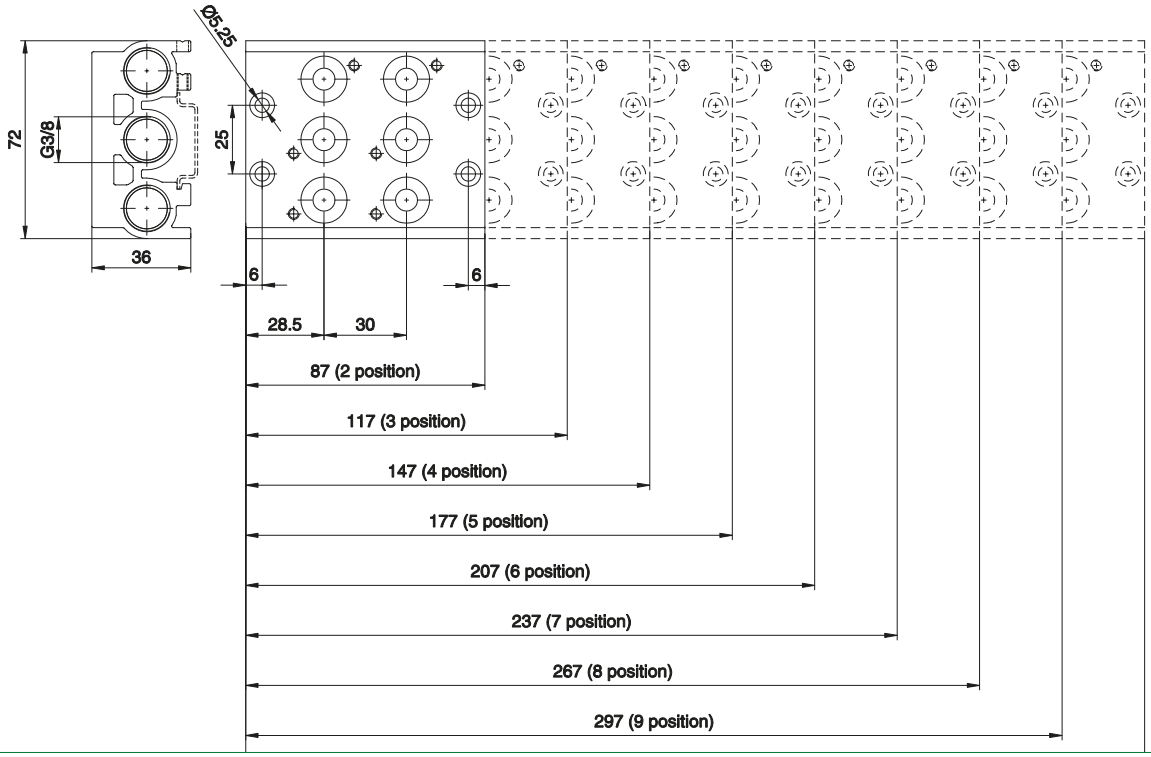

Modular collectors

Coding: T424.Ⓣ

Ⓣ	TYPE
	01 = Single complete base
	01K = Complete modular bases (batches of 15 pieces)
	30K = Hollow bush, complete with O-rings (Nr. 50 pieces)
	31K = Blank bush, complete with O-rings (Nr. 50 pieces)
	32K = Intermediate air intake with screw (Nr. 5 pieces)
	33 = Screw to suite solenoid valves (Nr. 50 pieces)
	34 = Screw for joning bases (Nr. 50 pieces)
	35 = Washer for screw for joning bases (Nr. 50 pieces)
	36 = OR (50 pz)

Closing plate

Coding: T424.00

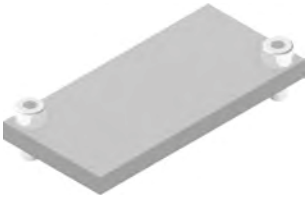

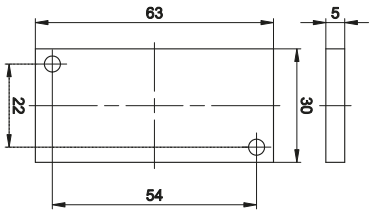

Weight 25 g

Series 2100 - 2400 - 2600

General

The 2000 series solenoid valves have been developed to meet requirements for electronically controlled pneumatic systems and / or serial control systems already used in all manufacturing sectors.
They have been designed to be easily assembled into groups or manifolds and include integral electrical connection (2100 and 2400), to facilitate simple and speedy integration into a control system.
The series comprises a range of products classified according to type, size and performance.
There are tree main sizes, 10mm., 18 mm. and 26 mm.,
with each size further divided into 3 types " LINE ", " FLAT " and " VDMA " or "BASE".
The 10mm. and 18 mm. 24 VDC range of valves includes a range of accessories for the production of manifolded valve assemblies with integral electrical connections.
Modules are available in two or four station variants for flexibility and are supplied to IP40 or alternatively IP65 environmental protection.

Construction characteristics

	Series 2100	Series 2400	Series 2600
Central body	Extruded aluminium bar with chemical nickel treatment and PTFE (polytetrafleurethylene)	Extruded aluminium bar with chemical nickel treatment and PTFE (polytetrafleurethylene)	Extruded aluminium bar with chemical nickel treatment and PTFE (polytetrafleurethylene)
Connection plates	Technopolymer	Zincalloy	Die-cast aluminium
Piston seals	Oil resistant nitrile rubber - NBR	Oil resistant nitrile rubber - NBR	Oil resistant nitrile rubber - NBR
Spool seals	Oil resistant nitrile rubber - HNBR	Oil resistant nitrile rubber - HNBR	Oil resistant nitrile rubber - HNBR
Springs	AISI 302 stainless steel	AISI 302 stainless steel	AISI 302 stainless steel
Operators	Technopolymer	Technopolymer	Technopolymer
Pistons	Aluminium 2011	Technopolymer	Technopolymer
Spools	Aluminium 2011	Aluminium 2011	Aluminium 2011

Use and maintenance

The average life of the valve exceeds 50.000.000 cycles when used under optimum conditions.
Adequate lubrication reduces seals wear, just as proper filtering of supply air prevents the build-up of dirt that can cause malfunction.
Ensure the valve is used within our recommended criteria for pressure and temperature.
In dirty or dusty environments, the exhaust ports should be protected.
A seal kit including the spool is available for overhauling the valve. This operation does not require a skilled worker, although a particular care should be taken when reassembling the valve.

Overall dimensions and technical information are provided solely for informative purposes and may be modified without notice

Series 2100

General

This solenoid valves series has been developed to meet requirements for electronically controlled pneumatic systems and / or serial control systems already used in all manufacturing sectors.
They have been designed to be easily assembled into groups or manifolds and include integral electrical connection to facilitate simple and speedy integration into a control system.
The 2100 series comprises a range of products classified according to the body size of 10mm divided into 3 types "LINE", "FLAT" and "BASE".
The 10mm. and 18 mm. 24 VDC range of valves includes a range of accessories for the production of manifolded valve assemblies with integral electrical connections.
Modules are available in two or four station variants for flexibility and are supplied to IP40 or alternatively IP65 environmental protection.

Construction characteristics

Central body	Extruded aluminium bar with chemical nickel treatment and PTFE (polytetrafleurethylene)
Connection plates	Technopolymer
Operators	Technopolymer
Spool seals	Oil resistant nitrile rubber - HNBR
Spools	Aluminium 2011
Springs	AISI 302 stainless steel
Pistons	Aluminium 2011
Piston seals	Oil resistant nitrile rubber - NBR

Ordering codes for minature solenoid valves

The 10 mm. miniature solenoid valve with 0,7 mm. orifice has been selected for piloting this series of valves (see Series 300).
This results in low response times and reduced power consumption.
The valve can be supplied with the coil upward or downward depending on the application.

Codes are as follows:

Coil upward code

01 = miniature sol. 12 VDC 90°conn. with led
21 = miniature sol. 12 VDC line conn. with led
02 = miniature sol. 24 VDC 90°conn. with led
22 = miniature sol. 24 VDC line conn. with led

Coil downward code

11 = miniature sol. 12 VDC 90° conn. with led
31 = miniature sol. 12 VDC line conn. with led
12 = miniature sol. 24 VDC 90°conn. with led
32 = miniature sol. 24 VDC line conn. with led
91 = miniature sol. 12 VDC for integral electrical connections
92 = miniature sol. 24 VDC for integral electrical connections

Miniature solenoid c UL us homologated are available (see Series 300).

Use and maintenance

The average life of the solenoid valve exceeds 50.000.000 cycles when used under optimum conditions.
Adequate lubrication reduces seals wear, just as proper filtering of supply air prevents the build-up of dirt that can cause malfunction.
Ensure the valve is used within our recommended criteria for pressure and temperature.
In dirty or dusty environments, the exhaust ports should be protected.
A seal kit including the spool is available for overhauling the valve. This operation does not require a skilled worker, although a particular care should be taken when reassembling the valve.

Pneumatic - Spring

Coding: 2115.52.00.19

Operational characteristics	
Fluid	Filtered air. No lubrication needed, if applied it shall be continuous
Max working pressure (bar)	7
Temperature °C	-5 ÷ +50
Flow rate at 6 bar with Δp=1 (Nl/min)	150
Orifice size (mm)	2.5
Working ports size	M5

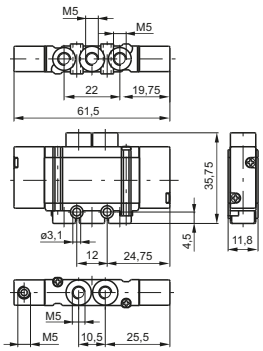

Weight 30 g
Minimum piloting pressure 2 bar

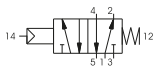

Pneumatic - Differential

Coding: 2115.52.00.16

Operational characteristics	
Fluid	Filtered air. No lubrication needed, if applied it shall be continuous
Max working pressure (bar)	7
Temperature °C	-5 ÷ +50
Flow rate at 6 bar with Δp=1 (Nl/min)	150
Orifice size (mm)	2.5
Working ports size	M5

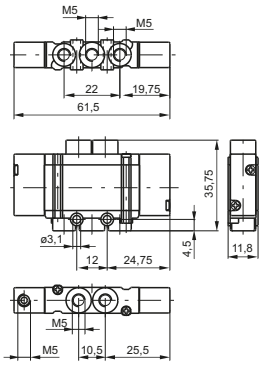

Weight 28 g
Minimum piloting pressure 2 bar

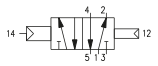

Pneumatic - Pneumatic

Coding: 2115.52.00.18

Operational characteristics	
Fluid	Filtered air. No lubrication needed, if applied it shall be continuous
Max working pressure (bar)	7
Temperature °C	-5 ÷ +50
Flow rate at 6 bar with Δp=1 (Nl/min)	150
Orifice size (mm)	2.5
Working ports size	M5

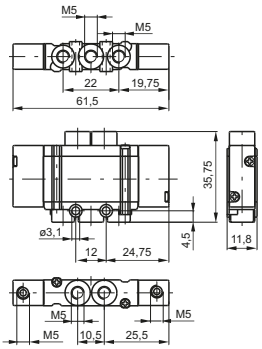

Weight 30 g
Minimum piloting pressure 2 bar

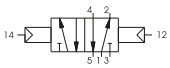

Overall dimensions and technical information are provided solely for informative purposes and may be modified without notice

Solenoid - Spring

Coding: 2115.52.00.39.Ⓣ

Operational characteristics	
Fluid	Filtered air. No lubrication needed, if applied it shall be continuous
Max working pressure (bar)	7
Temperature °C	-5 ÷ +50
Flow rate at 6 bar with Δp=1 (Nl/min)	150
Orifice size (mm)	2.5
Working ports size	M5

	VOLTAGE
	01 = 12 VDC 90° conn. with led
	21 = 12 VDC line conn. with led
	02 = 24 VDC 90° conn. with led
	22 = 24 VDC line conn. with led
Ⓣ	**11** = 12 VDC 90° conn. with led downward
	31 = 12 VDC line conn. with led downward
	12 = 24 VDC 90° conn. with led downward
	32 = 24 VDC line conn. with led downward

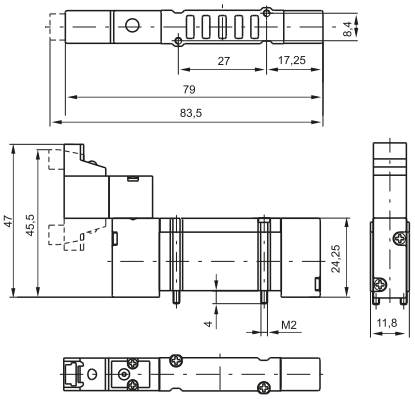

Weight 42 g
Minimum piloting pressure 2 bar

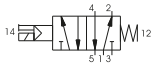

Solenoid - Differential

Coding: 2115.52.00.36.Ⓣ

Operational characteristics	
Fluid	Filtered air. No lubrication needed, if applied it shall be continuous
Max working pressure (bar)	7
Temperature °C	-5 ÷ +50
Flow rate at 6 bar with Δp=1 (Nl/min)	150
Orifice size (mm)	2.5
Working ports size	M5

	VOLTAGE
	01 = 12 VDC 90° conn. with led
	21 = 12 VDC line conn. with led
	02 = 24 VDC 90° conn. with led
	22 = 24 VDC line conn. with led
Ⓣ	**11** = 12 VDC 90° conn. with led downward
	31 = 12 VDC line conn. with led downward
	12 = 24 VDC 90° conn. with led downward
	32 = 24 VDC line conn. with led downward

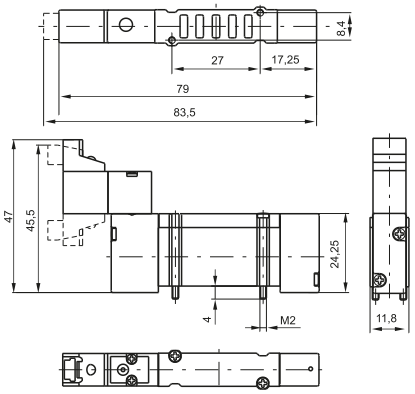

Weight 42 g
Minimum piloting pressure 2 bar

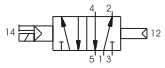

Solenoid - Solenoid

Coding: 2115.52.00.35.Ⓣ

Operational characteristics	
Fluid	Filtered air. No lubrication needed, if applied it shall be continuous
Max working pressure (bar)	7
Temperature °C	-5 ÷ +50
Flow rate at 6 bar with Δp=1 (Nl/min)	150
Orifice size (mm)	2.5
Working ports size	M5

	VOLTAGE
	01 = 12 VDC 90° conn. with led
	21 = 12 VDC line conn. with led
	02 = 24 VDC 90° conn. with led
	22 = 24 VDC line conn. with led
Ⓣ	**11** = 12 VDC 90° conn. with led downward
	31 = 12 VDC line conn. with led downward
	12 = 24 VDC 90° conn. with led downward
	32 = 24 VDC line conn. with led downward

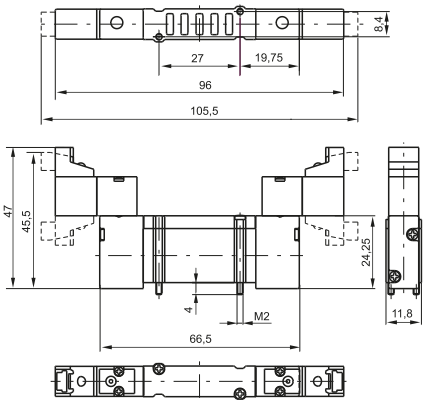

Weight 52 g
Minimum piloting pressure 2 bar

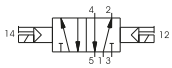

Pneumatic - Pneumatic

Coding: 2115.53.Ⓕ.18

Operational characteristics	
Fluid	Filtered air. No lubrication needed, if applied it shall be continuous
Max working pressure (bar)	7
Temperature °C	-5 ÷ +50
Flow rate at 6 bar with Δp=1 (Nl/min)	180 (Pressured centres) 130 (Closed centres) 140 (Open centres)
Orifice size (mm)	2.5
Working ports size	M5

	FUNCTION
Ⓕ	**31** = Closed centres
	32 = Open centres
	33 = Pressured centres

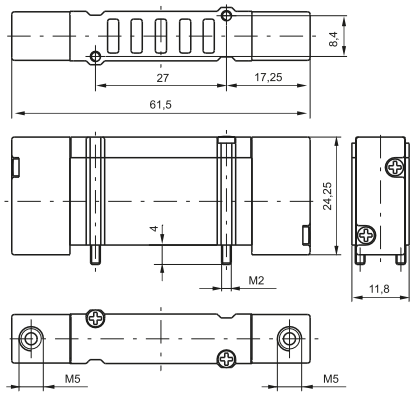

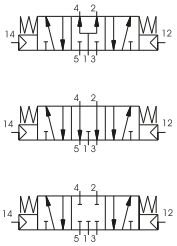

Weight 32 g
Minimum piloting pressure 2,5 bar

Solenoid - Solenoid

Coding: 2115.53.Ⓕ.35.Ⓣ

Operational characteristics	
Fluid	Filtered air. No lubrication needed, if applied it shall be continuous
Max working pressure (bar)	7
Temperature °C	-5 ÷ +50
Flow rate at 6 bar with Δp=1 (Nl/min)	180 (Pressured centres) 130 (Closed centres) 140 (Open centres)
Orifice size (mm)	2.5
Working ports size	M5

	FUNCTION
Ⓕ	**31** = Closed centres
	32 = Open centres
	33 = Pressured centres
	VOLTAGE
Ⓣ	**01** = 12 VDC 90° conn. with led
	21 = 12 VDC line conn. with led
	02 = 24 VDC 90° conn. with led
	22 = 24 VDC line conn. with led
	11 = 12 VDC 90° conn. with led downward
	31 = 12 VDC line conn. with led downward
	12 = 24 VDC 90° conn. with led downward
	32 = 24 VDC line conn. with led downward

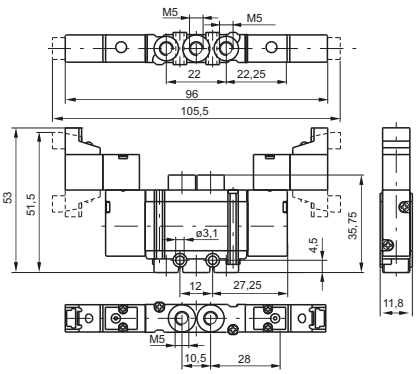

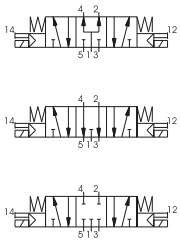

Weight 54 g
Minimum piloting pressure 2,5 bar

Overall dimensions and technical information are provided solely for informative purposes and may be modified without notice

Pneumatic - Spring

Coding: 2135.52.00.19

Operational characteristics	
Fluid	Filtered air. No lubrication needed, if applied it shall be continuous
Max working pressure (bar)	7
Temperature °C	-5 ÷ +50
Flow rate at 6 bar with Δp=1 (Nl/min)	150
Orifice size (mm)	2.5
Working ports size	M5

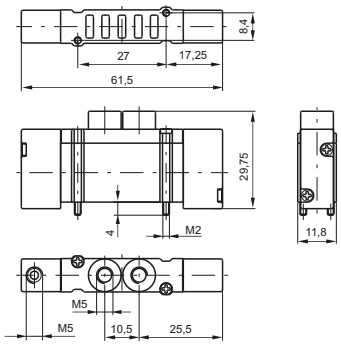

Weight 32 g
Minimum piloting pressure 2 bar

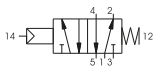

Pneumatic - Differential

Coding: 2135.52.00.16

Operational characteristics	
Fluid	Filtered air. No lubrication needed, if applied it shall be continuous
Max working pressure (bar)	7
Temperature °C	-5 ÷ +50
Flow rate at 6 bar with Δp=1 (Nl/min)	150
Orifice size (mm)	2.5
Working ports size	M5

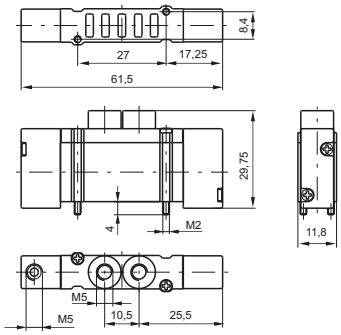

Weight 30 g
Minimum piloting pressure 2 bar

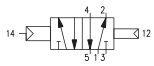

Pneumatic - Pneumatic

Coding: 2135.52.00.18

Operational characteristics	
Fluid	Filtered air. No lubrication needed, if applied it shall be continuous
Max working pressure (bar)	7
Temperature °C	-5 ÷ +50
Flow rate at 6 bar with Δp=1 (Nl/min)	150
Orifice size (mm)	2.5
Working ports size	M5

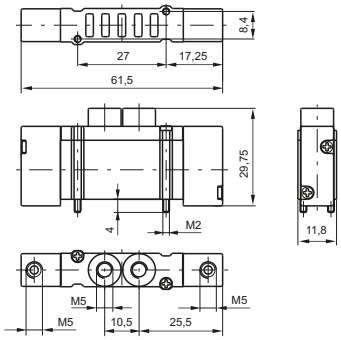

Weight 32 g
Minimum piloting pressure 2 bar

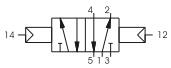

Solenoid - Spring

Coding: 2135.52.00.39.Ⓣ

Operational characteristics	
Fluid	Filtered air. No lubrication needed, if applied it shall be continuous
Max working pressure (bar)	7
Temperature °C	-5 ÷ +50
Flow rate at 6 bar with Δp=1 (Nl/min)	150
Orifice size (mm)	2.5
Working ports size	M5

	VOLTAGE
Ⓣ	**01** = 12 VDC 90° conn. with led
	21 = 12 VDC line conn. with led
	02 = 24 VDC 90° conn. with led
	22 = 24 VDC line conn. with led
	11 = 12 VDC 90° conn. with led downward
	31 = 12 VDC line conn. with led downward
	12 = 24 VDC 90° conn. with led downward
	32 = 24 VDC line conn. with led downward
	91 = 12 VDC for integral electrical connections downward
	92 = 24 VDC for integral electrical connections downward

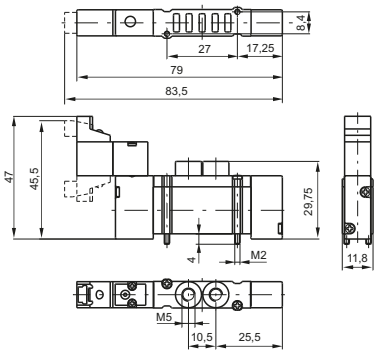

Weight 38 g
Minimum piloting pressure 2 bar

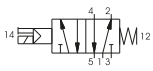

Solenoid - Differential

Coding: 2135.52.00.36.Ⓣ

Operational characteristics	
Fluid	Filtered air. No lubrication needed, if applied it shall be continuous
Max working pressure (bar)	7
Temperature °C	-5 ÷ +50
Flow rate at 6 bar with Δp=1 (Nl/min)	150
Orifice size (mm)	2.5
Working ports size	M5

	VOLTAGE
Ⓣ	**01** = 12 VDC 90° conn. with led
	21 = 12 VDC line conn. with led
	02 = 24 VDC 90° conn. with led
	22 = 24 VDC line conn. with led
	11 = 12 VDC 90° conn. with led downward
	31 = 12 VDC line conn. with led downward
	12 = 24 VDC 90° conn. with led downward
	32 = 24 VDC line conn. with led downward
	91 = 12 VDC for integral electrical connections downward
	92 = 24 VDC for integral electrical connections downward

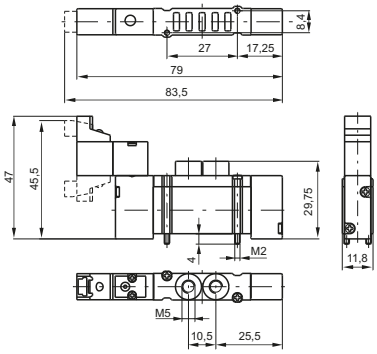

Weight 38 g
Minimum piloting pressure 2 bar

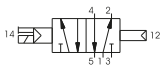

Solenoid - Solenoid

Coding: 2135.52.00.35.Ⓣ

Operational characteristics	
Fluid	Filtered air. No lubrication needed, if applied it shall be continuous
Max working pressure (bar)	7
Temperature °C	-5 ÷ +50
Flow rate at 6 bar with Δp=1 (Nl/min)	150
Orifice size (mm)	2.5
Working ports size	M5

	VOLTAGE
Ⓣ	**01** = 12 VDC 90° conn. with led
	21 = 12 VDC line conn. with led
	02 = 24 VDC 90° conn. with led
	22 = 24 VDC line conn. with led
	11 = 12 VDC 90° conn. with led downward
	31 = 12 VDC line conn. with led downward
	12 = 24 VDC 90° conn. with led downward
	32 = 24 VDC line conn. with led downward
	91 = 12 VDC for integral electrical connections downward
	92 = 24 VDC for integral electrical connections downward

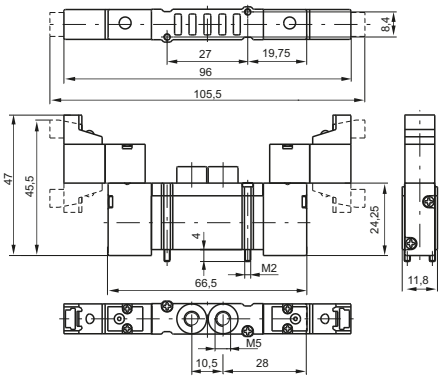

Weight 50 g
Minimum piloting pressure 1,5 bar

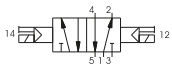

Overall dimensions and technical information are provided solely for informative purposes and may be modified without notice

Pneumatic - Pneumatic

Coding: 2135.53.Ⓕ.18

Operational characteristics	
Fluid	Filtered air. No lubrication needed, if applied it shall be continuous
Max working pressure (bar)	7
Temperature °C	-5 ÷ +50
Flow rate at 6 bar with Δp=1 (Nl/min)	180 (Pressured centres) 130 (Closed centres) 140 (Open centres)
Orifice size (mm)	2.5
Working ports size	M5

	FUNCTION
Ⓕ	**31** = Closed centres
	32 = Open centres
	33 = Pressured centres

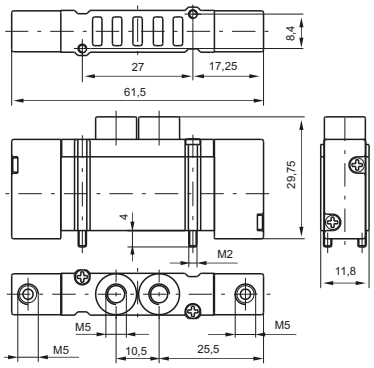

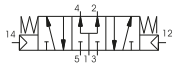

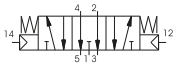

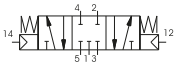

Weight 28 g
Minimum piloting pressure 2 bar

Solenoid - Solenoid

Coding: 2135.53.Ⓕ.35.Ⓣ

Operational characteristics	
Fluid	Filtered air. No lubrication needed, if applied it shall be continuous
Max working pressure (bar)	7
Temperature °C	-5 ÷ +50
Flow rate at 6 bar with Δp=1 (Nl/min)	180 (Pressured centres) 130 (Closed centres) 140 (Open centres)
Orifice size (mm)	2.5
Working ports size	M5

	FUNCTION
Ⓕ	**31** = Closed centres
	32 = Open centres
	33 = Pressured centres
	VOLTAGE
Ⓣ	**01** = 12 VDC 90° conn. with led
	21 = 12 VDC line conn. with led
	02 = 24 VDC 90° conn. with led
	22 = 24 VDC line conn. with led
	11 = 12 VDC 90° conn. with led downward
	31 = 12 VDC line conn. with led downward
	12 = 24 VDC 90° conn. with led downward
	32 = 24 VDC line conn. with led downward
	91 = 12 VDC for integral electrical connections downward
	92 = 24 VDC for integral electrical connections downward

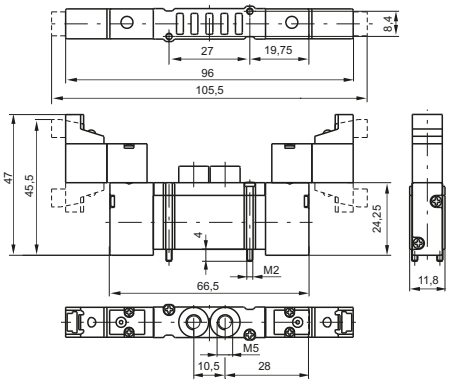

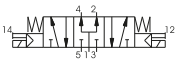

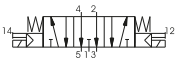

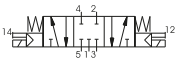

Weight 52 g
Minimum piloting pressure 2,5 bar

Pneumatic - Spring

Coding: 2141.52.00.19

Operational characteristics	
Fluid	Filtered air. No lubrication needed, if applied it shall be continuous
Max working pressure (bar)	7
Temperature °C	-5 ÷ +50
Flow rate at 6 bar with Δp=1 (Nl/min)	150
Orifice size (mm)	2.5
Working ports size	M5

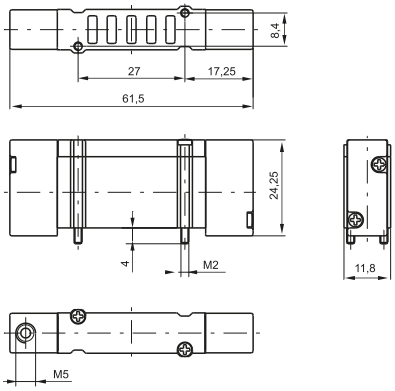

Weight 24 g
Minimum piloting pressure 2 bar

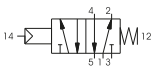

Pneumatic - Differential

Coding: 2141.52.00.16

Operational characteristics	
Fluid	Filtered air. No lubrication needed, if applied it shall be continuous
Max working pressure (bar)	7
Temperature °C	-5 ÷ +50
Flow rate at 6 bar with Δp=1 (Nl/min)	150
Orifice size (mm)	2.5
Working ports size	M5

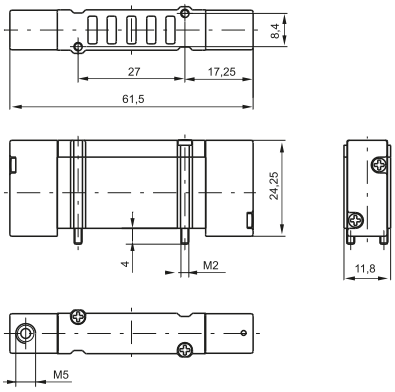

Weight 22 g
Minimum piloting pressure 2 bar

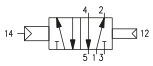

Pneumatic - Pneumatic

Coding: 2141.52.00.18

Operational characteristics	
Fluid	Filtered air. No lubrication needed, if applied it shall be continuous
Max working pressure (bar)	7
Temperature °C	-5 ÷ +50
Flow rate at 6 bar with Δp=1 (Nl/min)	150
Orifice size (mm)	2.5
Working ports size	M5

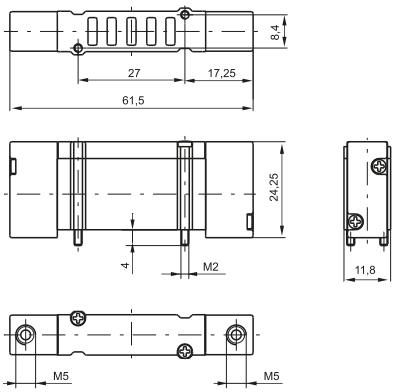

Weight 26 g
Minimum piloting pressure 1,5 bar

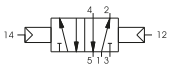

Overall dimensions and technical information are provided solely for informative purposes and may be modified without notice

Solenoid - Spring

Coding: 2141.52.00.39.T

Operational characteristics	
Fluid	Filtered air. No lubrication needed, if applied it shall be continuous
Max working pressure (bar)	7
Temperature °C	-5 ÷ +50
Flow rate at 6 bar with Δp=1 (Nl/min)	150
Orifice size (mm)	2.5
Working ports size	M5

	VOLTAGE
T	**01** = 12 VDC 90° conn. with led
	21 = 12 VDC line conn. with led
	02 = 24 VDC 90° conn. with led
	22 = 24 VDC line conn. with led
	11 = 12 VDC 90° conn. with led downward
	31 = 12 VDC line conn. with led downward
	12 = 24 VDC 90° conn. with led downward
	32 = 24 VDC line conn. with led downward
	91 = 12 VDC for integral electrical connections downward
	92 = 24 VDC for integral electrical connections downward

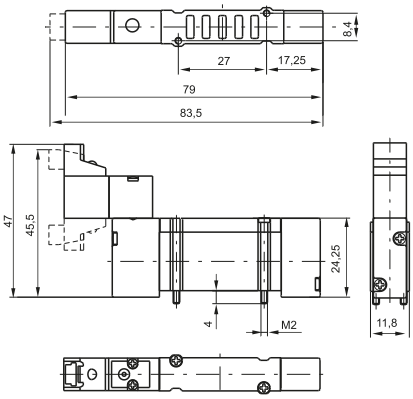

Weight 38 g
Minimum piloting pressure 2 bar

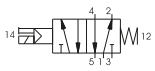

Solenoid - Differential

Coding: 2141.52.00.36.T

Operational characteristics	
Fluid	Filtered air. No lubrication needed, if applied it shall be continuous
Max working pressure (bar)	7
Temperature °C	-5 ÷ +50
Flow rate at 6 bar with Δp=1 (Nl/min)	150
Orifice size (mm)	2.5
Working ports size	M5

	VOLTAGE
T	**01** = 12 VDC 90° conn. with led
	21 = 12 VDC line conn. with led
	02 = 24 VDC 90° conn. with led
	22 = 24 VDC line conn. with led
	11 = 12 VDC 90° conn. with led downward
	31 = 12 VDC line conn. with led downward
	12 = 24 VDC 90° conn. with led downward
	32 = 24 VDC line conn. with led downward
	91 = 12 VDC for integral electrical connections downward
	92 = 24 VDC for integral electrical connections downward

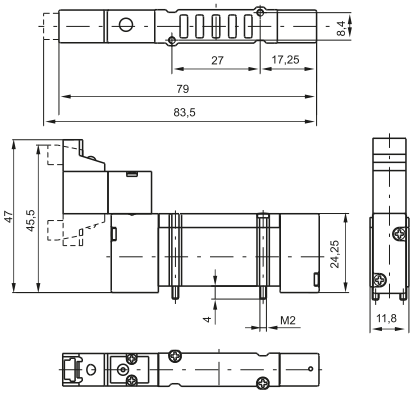

Weight 38 g
Minimum piloting pressure 2 bar

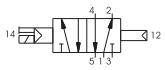

Solenoid - Solenoid

Coding: 2141.52.00.35.T

Operational characteristics	
Fluid	Filtered air. No lubrication needed, if applied it shall be continuous
Max working pressure (bar)	7
Temperature °C	-5 ÷ +50
Flow rate at 6 bar with Δp=1 (Nl/min)	150
Orifice size (mm)	2.5
Working ports size	M5

	VOLTAGE
T	**01** = 12 VDC 90° conn. with led
	21 = 12 VDC line conn. with led
	02 = 24 VDC 90° conn. with led
	22 = 24 VDC line conn. with led
	11 = 12 VDC 90° conn. with led downward
	31 = 12 VDC line conn. with led downward
	12 = 24 VDC 90° conn. with led downward
	32 = 24 VDC line conn. with led downward
	91 = 12 VDC for integral electrical connections downward
	92 = 24 VDC for integral electrical connections downward

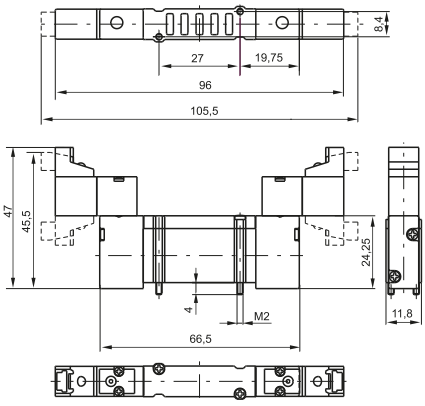

Weight 48 g
Minimum piloting pressure 1,5 bar

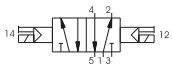

Pneumatic - Pneumatic

Coding: 2141.53.Ⓕ.18

Operational characteristics	
Fluid	Filtered air. No lubrication needed, if applied it shall be continuous
Max working pressure (bar)	7
Temperature °C	-5 ÷ +50
Flow rate at 6 bar with Δp=1 (Nl/min)	180 (Pressured centres) 130 (Closed centres) 140 (Open centres)
Orifice size (mm)	2.5
Working ports size	M5

	FUNCTION
Ⓕ	**31** = Closed centres
	32 = Open centres
	33 = Pressured centres

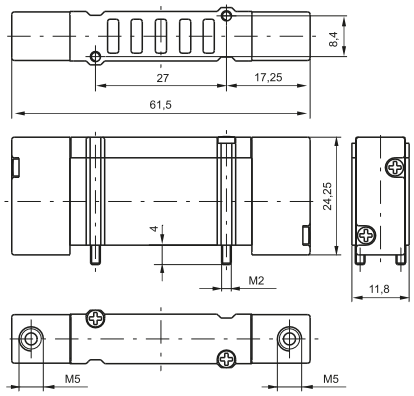

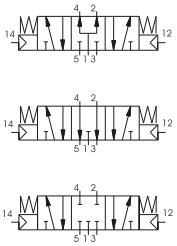

Weight 28 g
Minimum working pressure 2 bar

Solenoid - Solenoid

Coding: 2141.53.Ⓕ.35.Ⓣ

Operational characteristics	
Fluid	Filtered air. No lubrication needed, if applied it shall be continuous
Max working pressure (bar)	7
Temperature °C	-5 ÷ +50
Flow rate at 6 bar with Δp=1 (Nl/min)	180 (Pressured centres) 130 (Closed centres) 140 (Open centres)
Orifice size (mm)	2.5
Working ports size	M5

	FUNCTION
Ⓕ	**31** = Closed centres
	32 = Open centres
	33 = Pressured centres
	VOLTAGE
Ⓣ	**01** = 12 VDC 90° conn. with led
	21 = 12 VDC line conn. with led
	02 = 24 VDC 90° conn. with led
	22 = 24 VDC line conn. with led
	11 = 12 VDC 90° conn. with led downward
	31 = 12 VDC line conn. with led downward
	12 = 24 VDC 90° conn. with led downward
	32 = 24 VDC line conn. with led downward
	91 = 12 VDC for integral electrical connections downward
	92 = 24 VDC for integral electrical connections downward

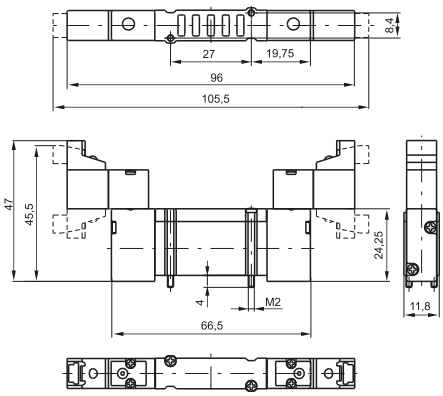

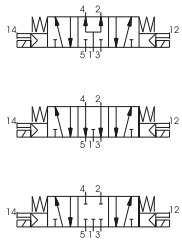

Weight 52 g
Minimum piloting pressure 2,5 bar

Overall dimensions and technical information are provided solely for informative purposes and may be modified without notice

Modular base for "BASE" version

Coding: 214Ⓥ.01

Ⓥ	VARIANTS
	0 = modular BASE without cartridges
	4 = modular base c/w with 4mm tube cartridges
	5 = modular base c/w with M5 cartridges
	7 = modular base c/w with M7x1 cartridges

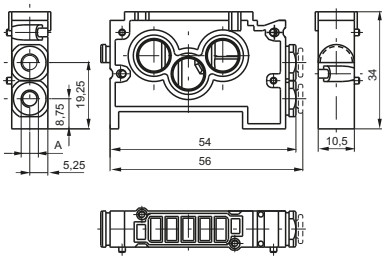

Weight 22 g

Modular BASE c/w with 6mm tube cartridges

Coding: 2146.01

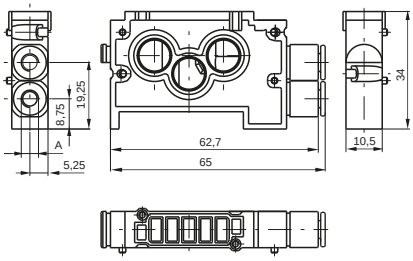

Weight 22 g

Modular base for "FLAT" version

Coding: 2130.01

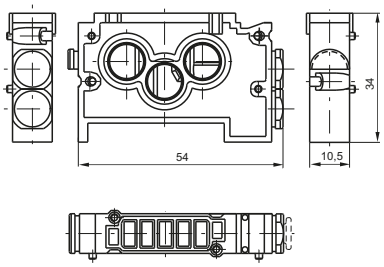

Weight 28 g

Inlet base

Coding: 2140.Ⓥ

Ⓥ	VARIANTS
	02 = Right
	03 = Left

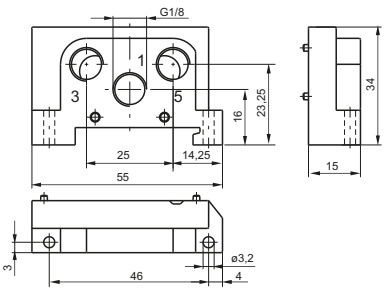

Weight 18 g

2140.02

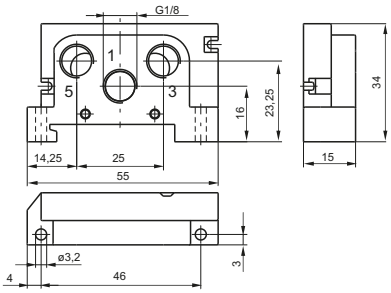

Weight 18 g

2140.03

Closing plate

Coding: 2130.00

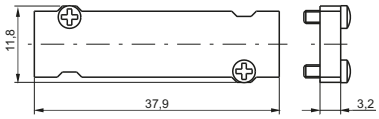

Weight 7 g

Intermediate air intake

Coding: 2130.10

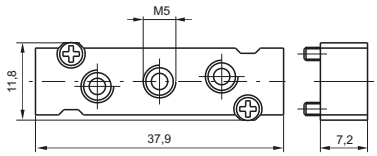

Weight 12 g
to be assembled instead of a valve

DIN rail adapter

Coding: 2130.16

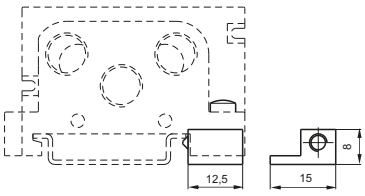

Weight 6 g

Modular base cartridge

Coding: 2100.Ⓥ

	VARIANTS	
Ⓥ	**031M** =	Ø4 tube cartridge
	033M =	M5 cartridges
	034M =	M7x1 cartridges
	035M =	Blanck base
	036M =	Ø4 tube cartridge

Weight 5 g

Diaphragm plug

Coding: 2130.17

Weight 6 g

Overall dimensions and technical information are provided solely for informative purposes and may be modified without notice

The integral electrical design for the series 2400 valve is extremely flexible, allowing the production of pre-wired solenoid valve manifolds, the configuration of which can be determined at the point of assembly. The 24 VDC, 12 VDC (equivalent PNP) modules are available with 2 or 4 positions. The system assembled is designed for an IP40 - IP65 protection.
Coil type 91 or 92 is required for the multipin electrical connection (see valve ordering codes).

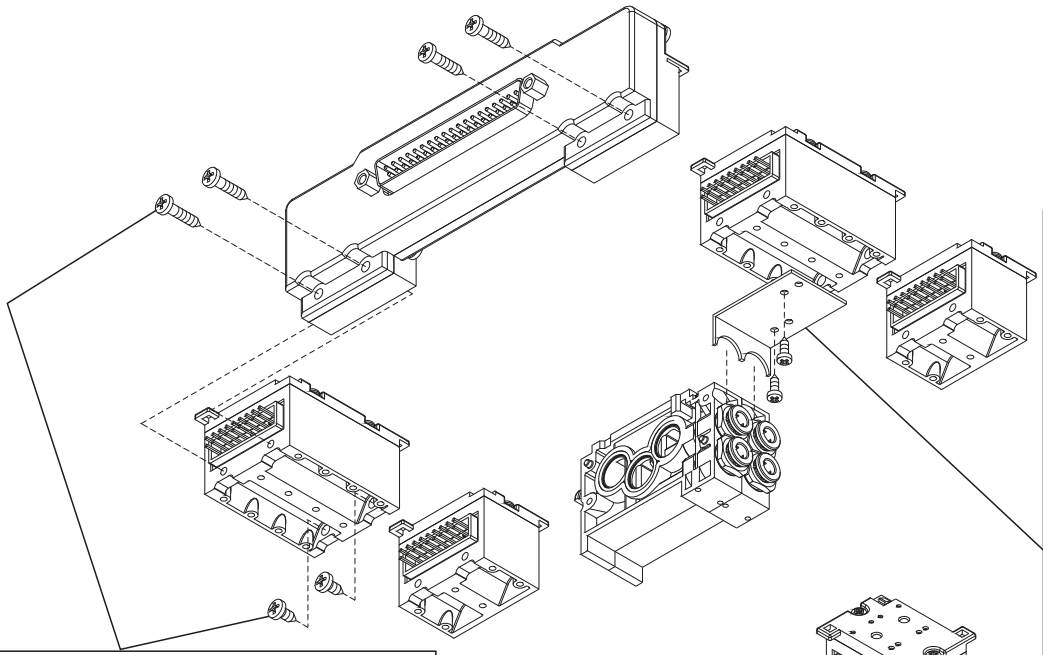

Support plates are supplied to mount the electrical connection elements to the manifold modules. Individual valves can still be removed from the manifold even after assembly is complete. One support plate is required per element.

The elements connect together using an upper coupling and lower fixing screw.

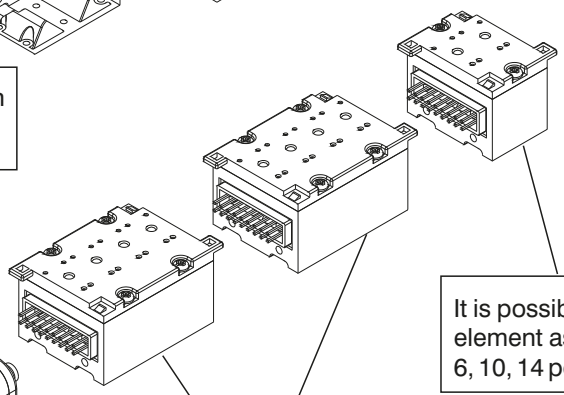

It is possible to use the 2 position element as the first terminal on 2, 6, 10, 14 position assemblies.

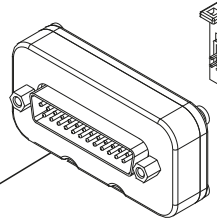

On single solenoid assemblies electrical connection is made using an D-SUB 25 multi-connector.

Up to 16 valves can be operated by using 4x4 position elements.

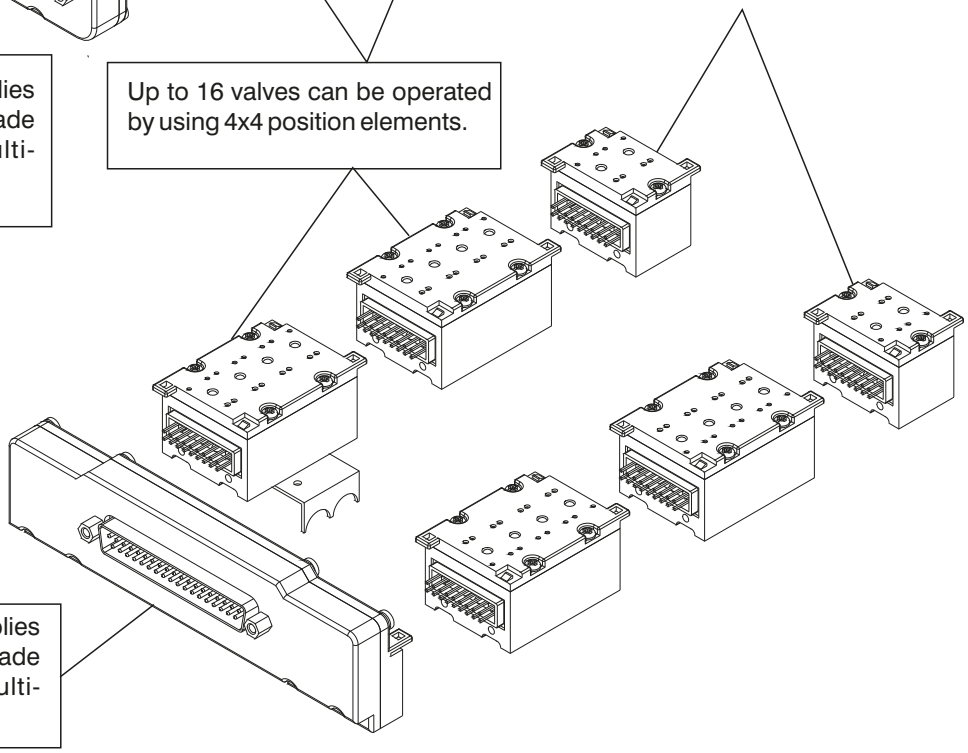

On double solenoid assemblies electrical connection is made usinfg an D-SUB 37 multi-connector.

Module for connections

Coding: 2100.Ⓟ.Ⓣ

Ⓟ	POSITIONS
	04 = 4 positions
	02 = 2 positions
Ⓣ	TYPE
	00 = Left IP40-PNP
	02 = Left IP40-PNP with protection diode
	10 = Left IP65-PNP
	12 = Left IP65-PNP with protection diode
	01 = Right IP40-PNP
	03 = Right IP40-PNP with protection diode
	11 = Right IP65-PNP
	13 = Right IP65-PNP with protection diode

Weight 35 g

2100.02.Ⓣ

Weight 20 g

2100.04.Ⓣ

Front connector

Coding: 2100.Ⓟ.10

Ⓟ	POLES
	37 = 37 poles
	25 = 25 poles

Weight 120 g
The IP65 protection is obtained by IP65 Pneumax cable

2100.37.10

Weight 40 g
The IP65 protection is obtained by IP65 Pneumax cable

2100.25.10

Plug

Coding: 2100.00

Weight 4 g

FLAT support plate

Coding: 2130.50

Weight 5 g

Overall dimensions and technical information are provided solely for informative purposes and may be modified without notice

In line cable complete with connector IP40

Coding: 2400.Ⓣ.Ⓛ.00

Ⓣ	CONNECTORS
	25 = 25 poles
	37 = 37 poles
Ⓛ	CABLE LENGTH
	03 = 3 meters
	05 = 5 meters
	10 = 10 meters

Cable complete with connector, 25 Poles IP65

Coding: 2300.25.Ⓛ.Ⓒ

Ⓛ	CABLE LENGTH
	03 = 3 meters
	05 = 5 meters
	10 = 10 meters
Ⓒ	CONNECTOR
	10 = In line
	90 = 90° Angle

Cable complete with connector, 37 Poles IP65

Coding: 2400.37.Ⓛ.Ⓒ

Ⓛ	CABLE LENGTH
	03 = 3 meters
	05 = 5 meters
	10 = 10 meters
Ⓒ	CONNECTOR
	10 = In line
	90 = 90° Angle

SUB-D 25 CONTACTS CONNECTOR

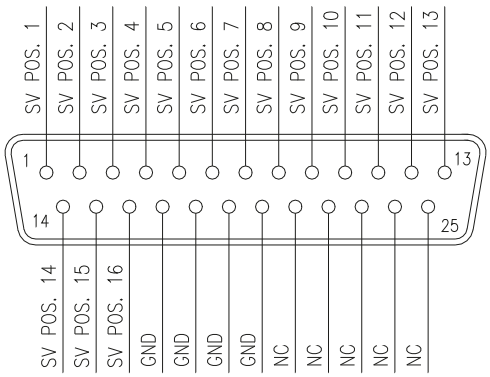

SUB-D 37 CONTACTS CONNECTOR

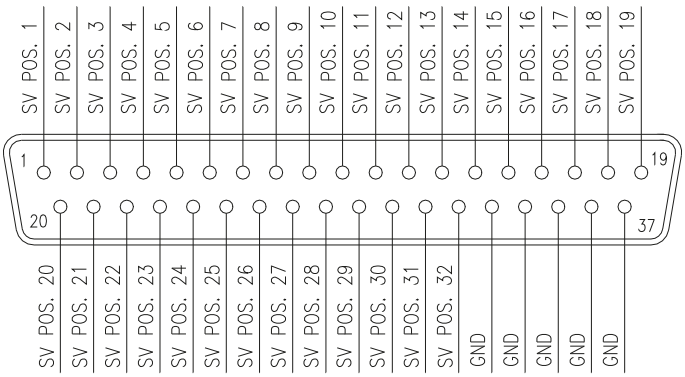

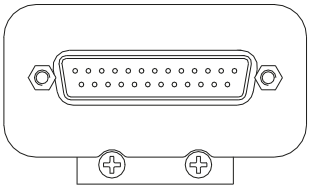

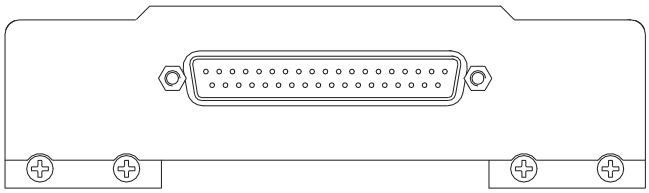

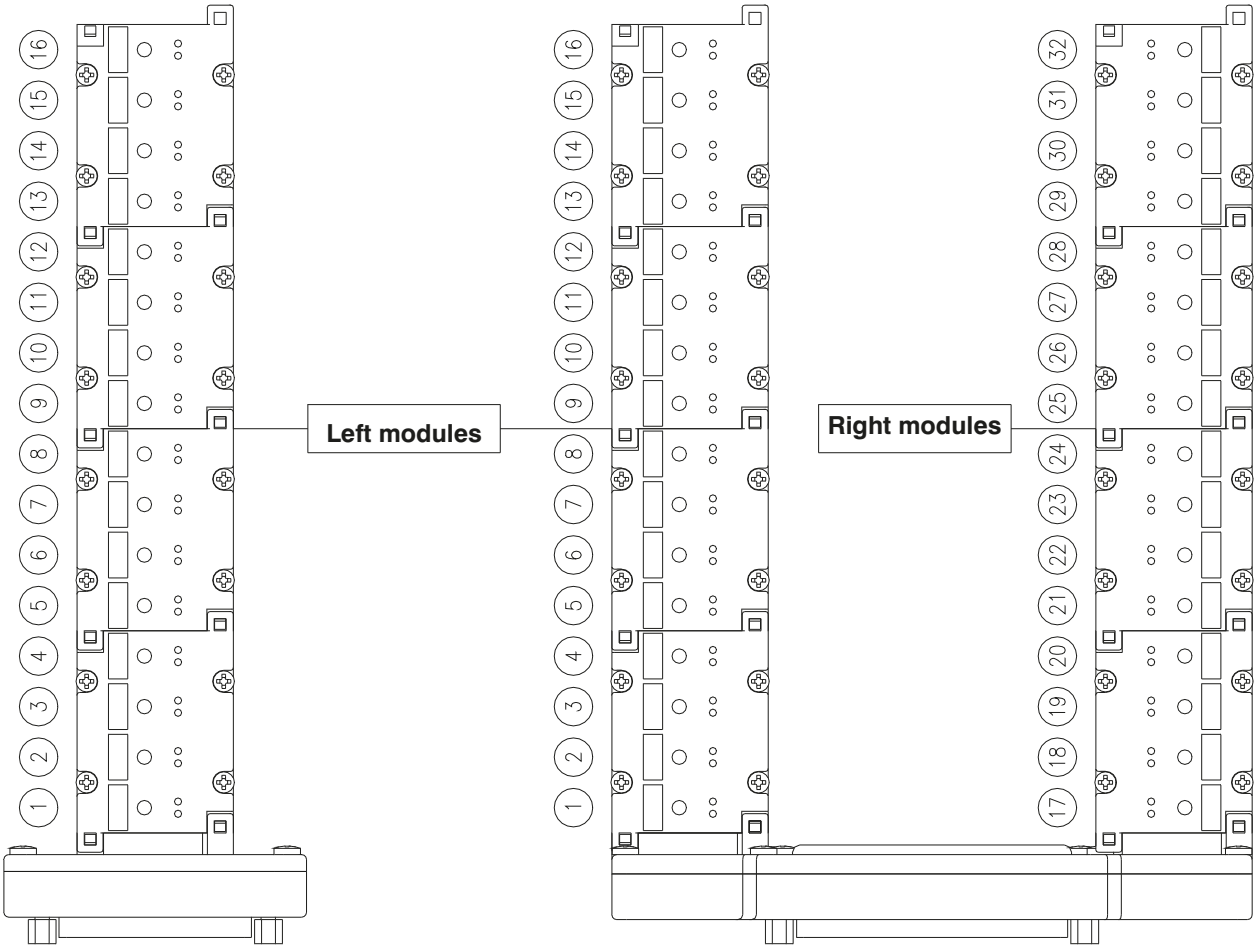

Overall dimensions and technical information are provided solely for informative purposes and may be modified without notice

Series 2400

General

This solenoid valves series has been developed to meet requirements for electronically controlled pneumatic systems and / or serial control systems already used in all manufacturing sectors.
They have been designed to be easily assembled into groups or manifolds and include integral electrical connection to facilitate simple and speedy integration into a control system.
The 2400 series comprises a range of products classified according to the body size of 18mm divided into 3 types "LINE", "FLAT" and "VDMA".
The 10mm. and 18 mm. 24 VDC range of valves includes a range of accessories for the production of manifolded valve assemblies with integral electrical connections.
Modules are available in two or four station variants for flexibility and are supplied to IP40 or alternatively IP65 environmental protection.

Construction characteristics

Central body	Extruded aluminium bar with chemical nickel treatment and PTFE (polytetrafleurethylene)
Connection plates	Zincalloy
Operators	Technopolymer
Spool seals	Oil resistant nitrile rubber - HNBR
Spools	Aluminium 2011
Springs	AISI 302 stainless steel
Pistons	Technopolymer
Piston seals	Oil resistant nitrile rubber - NBR

Use and maintenance

The average life of the solenoid valve exceeds 50.000.000 cycles when used under optimum conditions.
Adequate lubrication reduces seals wear, just as proper filtering of supply air prevents the build-up of dirt that can cause malfunction.
Ensure the valve is used within our recommended criteria for pressure and temperature.
In dirty or dusty environments, the exhaust ports should be protected.
A seal kit including the spool is available for overhauling the valve. This operation does not require a skilled worker, although a particular care should be taken when reassembling the valve.

Ordering codes for minature solenoid valves

The 15 mm. miniature solenoid valve with 1,1 mm. orifice has been selected for piloting this series of valves (see Series 300).
This results in low response times and reduced power consumption.
The valve can be supplied with the coil upward or downward (multipolar connections) depending on the application.

Codes are as follows:

Coil upward code

01 = miniature solenoid 12 VDC
02 = miniature solenoid 24 VDC
05 = miniature solenoid 24 VAC
06 = miniature solenoid 110 VAC
07 = miniature sol. 230 VAC
08 = miniature sol. 24 VDC 1W
09 = miniature sol. 24 VDC Earth faston

Coil downward code

11 = miniature solenoid 12 VDC
12 = miniature solenoid 24 VDC
15 = miniature solenoid 24 VAC
16 = miniature solenoid 110 VAC
17 = miniature sol. 230 VAC
18 = miniature sol. 24 VDC 1W Downward
19 = miniature sol. 24 VDC Earth faston Downward

	Well-tried component	- The product is a well-tried product for a safety-related application according to ISO 13849-1. - The relevant basic and well-tried safety principles according ISO 13849-2 for this product are fulfilled. - The suitability of the product for a precise application must be verified and confirmed by the user.
B_{10d}	50.000.000	

Miniature solenoid c UL us homologated are available (see Series 300).

Pneumatic - Spring

Coding: 241Ⓐ.52.00.19

Operational characteristics	
Fluid	Filtered air. No lubrication needed, if applied it shall be continuous
Max working pressure (bar)	10
Maximum piloting pressure (bar)	2
Temperature °C	-5 ÷ +50
Flow rate at 6 bar with Δp=1 (Nl/min)	800
Orifice size (mm)	7
Pilot ports size	M5

	WORKING PORTS SIZE
Ⓐ	**1** = G1/4"
	5 = G1/8"
	6 = Quick fitting tube Ø6
	8 = Quick fitting tube Ø8

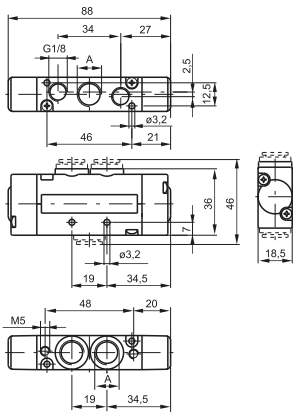

Weight 155 g

For dimension "A" see ordering code

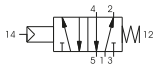

Pneumatic - Differential

Coding: 241Ⓐ.52.00.16

Operational characteristics	
Fluid	Filtered air. No lubrication needed, if applied it shall be continuous
Max working pressure (bar)	10
Maximum piloting pressure (bar)	2
Temperature °C	-5 ÷ +50
Flow rate at 6 bar with Δp=1 (Nl/min)	800
Orifice size (mm)	7
Pilot ports size	M5

	WORKING PORTS SIZE
Ⓐ	**1** = G1/4"
	5 = G1/8"
	6 = Quick fitting tube Ø6
	8 = Quick fitting tube Ø8

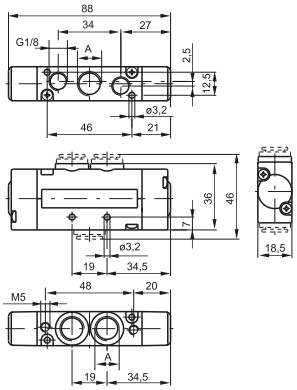

Weight 155 g

For dimension "A" see ordering code

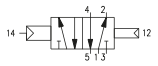

Overall dimensions and technical information are provided solely for informative purposes and may be modified without notice

Pneumatic - Differential (External)

Coding: 241Ⓐ.52.00.17

Operational characteristics	
Fluid	Filtered air. No lubrication needed, if applied it shall be continuous
Max working pressure (bar)	10
Maximum piloting pressure (bar)	2
Temperature °C	-5 ÷ +50
Flow rate at 6 bar with Δp=1 (Nl/min)	800
Orifice size (mm)	7
Pilot ports size	M5

	WORKING PORTS SIZE
Ⓐ	**1** = G1/4"
	5 = G1/8"
	6 = Quick fitting tube Ø6
	8 = Quick fitting tube Ø8

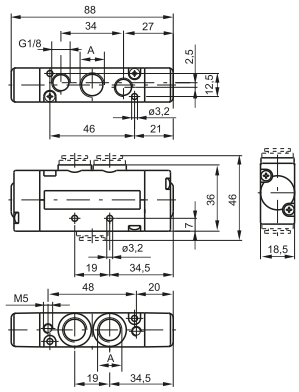

Weight 155 g

For dimension "A" see ordering code

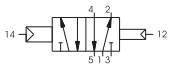

Pneumatic - Pneumatic

Coding: 241Ⓐ.52.00.18

Operational characteristics	
Fluid	Filtered air. No lubrication needed, if applied it shall be continuous
Max working pressure (bar)	10
Maximum piloting pressure (bar)	1.5
Temperature °C	-5 ÷ +50
Flow rate at 6 bar with Δp=1 (Nl/min)	800
Orifice size (mm)	7
Pilot ports size	M5

	WORKING PORTS SIZE
Ⓐ	**1** = G1/4"
	5 = G1/8"
	6 = Quick fitting tube Ø6
	8 = Quick fitting tube Ø8

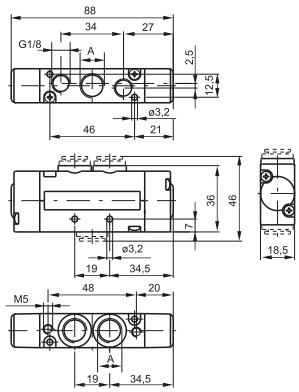

Weight 155 g

For dimension "A" see ordering code

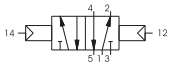

Solenoid-Spring / Differential

Coding: 241Ⓐ.52.00.Ⓥ.Ⓣ

Operational characteristics	
Fluid	Filtered air. No lubrication needed, if applied it shall be continuous
Max working pressure (bar)	10
Maximum piloting pressure (bar)	2
Temperature °C	-5 ÷ +50
Flow rate at 6 bar with Δp=1 (Nl/min)	800
Orifice size (mm)	7
Pilot ports size	M5

Ⓐ	WORKING PORTS SIZE
	1 = G1/4"
	5 = G1/8"
	6 = Quick fitting tube Ø6
	8 = Quick fitting tube Ø8
Ⓥ	VERSION
	39 = Solenoid - Spring
	29 = Solenoid external-Spring
	36 = Solenoid-Differerential
	37 = Solenoid-Differential external
	26 = Solenoid external-Differerential
	27 = Solenoid external-Differential external
Ⓣ	VOLTAGE
	01 = 12V DC
	02 = 24V DC
	05 = 24V AC
	06 = 110V AC
	07 = 230 V AC
	08 = 24V DC 1W
	09 = 24V DC downward
	11 = 12V DC downward
	12 = 24V DC downward
	15 = 24V AC downward
	16 = 110V AC downward
	17 = 230 V AC downward
	18 = 24V DC 1W downward
	19 = 24V DC Earth faston downward

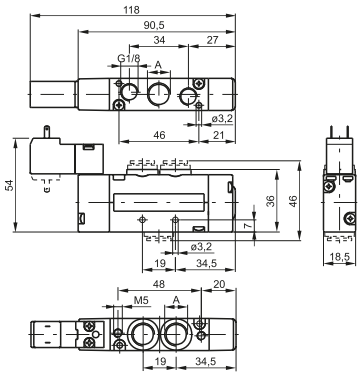

For dimension "A" see ordering code

Weight 195 g

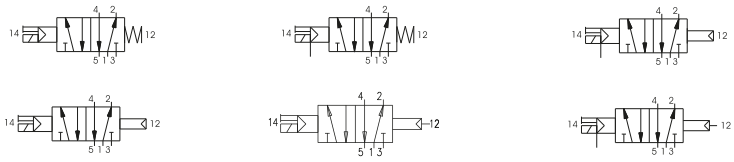

Solenoid - Solenoid

Coding: 241Ⓐ.52.00.Ⓥ.Ⓣ

Operational characteristics	
Fluid	Filtered air. No lubrication needed, if applied it shall be continuous
Max working pressure (bar)	10
Maximum piloting pressure (bar)	1.5
Temperature °C	-5 ÷ +50
Flow rate at 6 bar with Δp=1 (Nl/min)	800
Orifice size (mm)	7
Pilot ports size	M5

Ⓐ	WORKING PORTS SIZE
	1 = G1/4"
	5 = G1/8"
	6 = Quick fitting tube Ø6
	8 = Quick fitting tube Ø8
Ⓥ	VERSION
	35 = Solenoid-Solenoid
	24 = Solenoid external-Solenoid external
Ⓣ	VOLTAGE
	01 = 12V DC
	02 = 24V DC
	05 = 24V AC
	06 = 110V AC
	07 = 230 V AC
	08 = 24V DC 1W
	09 = 24V DC downward
	11 = 12V DC downward
	12 = 24V DC downward
	15 = 24V AC downward
	16 = 110V AC downward
	17 = 230 V AC downward
	18 = 24V DC 1W downward
	19 = 24V DC Earth faston downward

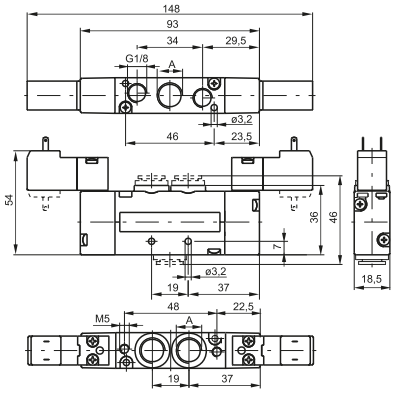

Weight 225 g

For dimension "A" see ordering code

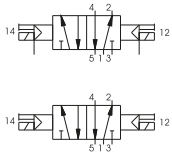

Overall dimensions and technical information are provided solely for informative purposes and may be modified without notice

Pneumatic-Pneumatic 5/3

Coding: 241Ⓐ.53.Ⓕ.18

Operational characteristics	
Fluid	Filtered air. No lubrication needed, if applied it shall be continuous
Max working pressure (bar)	10
Maximum piloting pressure (bar)	3
Temperature °C	-5 ÷ +50
Flow rate at 6 bar with Δp=1 (Nl/min)	650
Orifice size (mm)	7
Pilot ports size	M5

Ⓐ	WORKING PORTS SIZE
	1 = G1/4"
	5 = G1/8"
	6 = Quick fitting tube Ø6
	8 = Quick fitting tube Ø8
Ⓒ	CONNECTOR
	10 = In line
	90 = 90° Angle

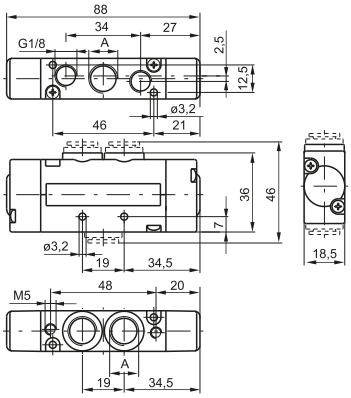

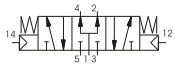

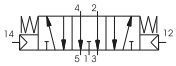

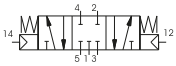

Weight 165 g

For dimension "A" see ordering code

Solenoid - Solenoid

Coding: 241Ⓐ.53.Ⓕ.Ⓥ.Ⓣ

Operational characteristics	
Fluid	Filtered air. No lubrication needed, if applied it shall be continuous
Max working pressure (bar)	10
Maximum piloting pressure (bar)	3
Temperature °C	-5 ÷ +50
Flow rate at 6 bar with Δp=1 (Nl/min)	650
Orifice size (mm)	7
Pilot ports size	M5

Ⓐ	WORKING PORTS SIZE
	1 = G1/4"
	5 = G1/8"
	6 = Quick fitting tube Ø6
	8 = Quick fitting tube Ø8
Ⓕ	FUNCTION
	31 = Closed centres
	32 = Open centres
	33 = Pressured centres
Ⓥ	VERSION
	24 = Solenoid external-Solenoid external
	35 = Solenoid-Solenoid
Ⓣ	VOLTAGE
	01 = 12V DC
	02 = 24V DC
	05 = 24V AC
	06 = 110V AC
	07 = 230 V AC
	08 = 24V DC 1W
	09 = 24V DC downward
	11 = 12V DC downward
	12 = 24V DC downward
	15 = 24V AC downward
	16 = 110V AC downward
	17 = 230 V AC downward
	18 = 24V DC 1W downward
	19 = 24V DC Earth faston downward

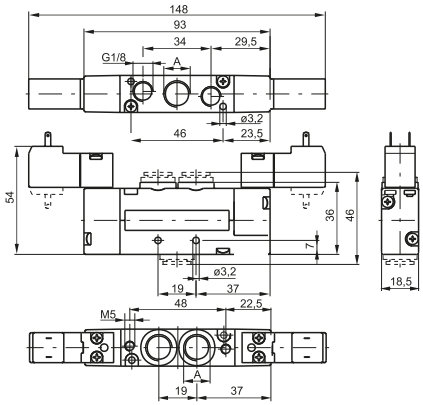

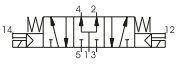

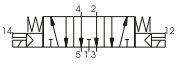

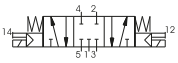

Weight 235 g

For dimension "A" see ordering code

Pneumatic-Pneumatic 2 x 3/2

Coding: 241Ⓐ.62.Ⓕ.18

Operational characteristics	
Fluid	Filtered air. No lubrication needed, if applied it shall be continuous
Max working pressure (bar)	10
Maximum piloting pressure (bar)	≥1,5+(0,2xInlet pressure)
Temperature °C	-5 ÷ +50
Flow rate at 6 bar with Δp=1 (Nl/min)	450
Orifice size (mm)	7

	WORKING PORTS SIZE
Ⓐ	**1** = G1/4"
	5 = G1/8"
	6 = Quick fitting tube Ø6
	8 = Quick fitting tube Ø8
	FUNCTION
Ⓕ	**44** = 2 Coils 3/2 NC
	45 = 1 Coil 3/2 NC (14) + 1 Coil 3/2 NO (12)
	55 = 2 Coils 3/2 NO
	54 = 1 Coil 3/2 NO (14) + 1 Coil 3/2 NC (12)

*Example: if inlet pressure is set at 5bar then pilot pressure must be at least Pp=1,5+(0.2*5)=2,5bar*

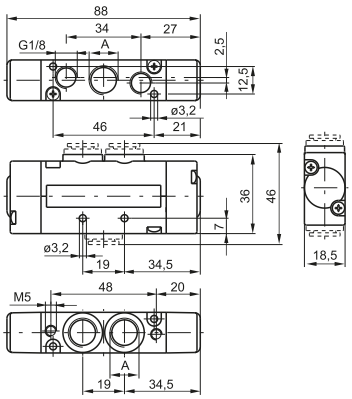

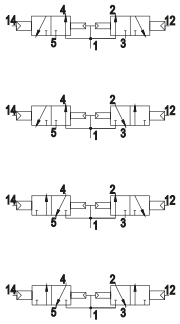

Weight 170 g

For dimension "A" see ordering code

Solenoid - Solenoid 2 x 3/2

Coding: 241Ⓐ.62.Ⓕ.35.Ⓣ

Operational characteristics	
Fluid	Filtered air. No lubrication needed, if applied it shall be continuous
Max working pressure (bar)	10
Maximum piloting pressure (bar)	≥1,5+(0,2xInlet pressure)
Temperature °C	-5 ÷ +50
Flow rate at 6 bar with Δp=1 (Nl/min)	450
Orifice size (mm)	7

	WORKING PORTS SIZE
Ⓐ	**1** = G1/4"
	5 = G1/8"
	6 = Quick fitting tube Ø6
	8 = Quick fitting tube Ø8
	FUNCTION
Ⓕ	**44** = 2 Coils 3/2 NC
	45 = 1 Coil 3/2 NC (14) + 1 Coil 3/2 NO (12)
	55 = 2 Coils 3/2 NO
	54 = 1 Coil 3/2 NO (14) + 1 Coil 3/2 NC (12)
	VOLTAGE
Ⓣ	**01** = 12V DC
	02 = 24V DC
	05 = 24V AC
	06 = 110V AC
	07 = 230 V AC
	08 = 24V DC 1 Watt
	09 = 24V DC downward
	11 = 12V DC downward
	12 = 24V DC downward
	15 = 24V AC downward
	16 = 110V AC downward
	17 = 230 V AC downward
	18 = 24V DC 1 Watt downward
	19 = 24V DC Earth faston downward

*Example: if inlet pressure is set at 5bar then pilot pressure must be at least Pp=1,5+(0.2*5)=2,5bar*

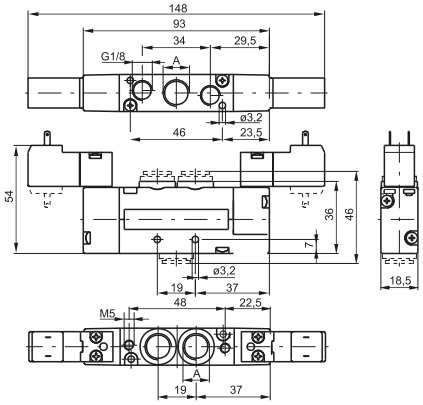

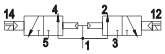

For dimension "A" see ordering code

Weight 250 g

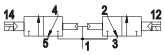

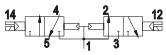

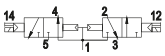

Overall dimensions and technical information are provided solely for informative purposes and may be modified without notice

Pneumatic - Spring

Coding: 243Ⓐ.52.00.19

Operational characteristics	
Fluid	Filtered air. No lubrication needed, if applied it shall be continuous
Max working pressure (bar)	10
Maximum piloting pressure (bar)	2
Temperature °C	-5 ÷ +50
Flow rate at 6 bar with Δp=1 (Nl/min)	800
Orifice size (mm)	7
Pilot ports size	M5

	WORKING PORTS SIZE
Ⓐ	**1** = G1/4"
	5 = G1/8"
	6 = Quick fitting tube Ø6
	8 = Quick fitting tube Ø8

Weight 105 g

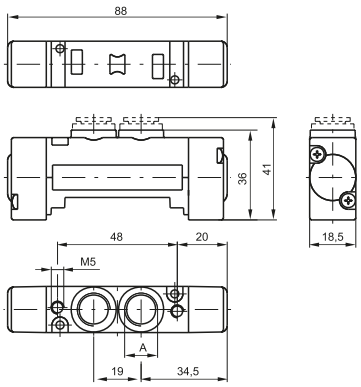

For dimension "A" see ordering code

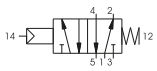

Pneumatic - Differential

Coding: 243Ⓐ.52.00.16

Operational characteristics	
Fluid	Filtered air. No lubrication needed, if applied it shall be continuous
Max working pressure (bar)	10
Maximum piloting pressure (bar)	2
Temperature °C	-5 ÷ +50
Flow rate at 6 bar with Δp=1 (Nl/min)	800
Orifice size (mm)	7
Pilot ports size	M5

	WORKING PORTS SIZE
Ⓐ	**1** = G1/4"
	5 = G1/8"
	6 = Quick fitting tube Ø6
	8 = Quick fitting tube Ø8

Weight 105 g

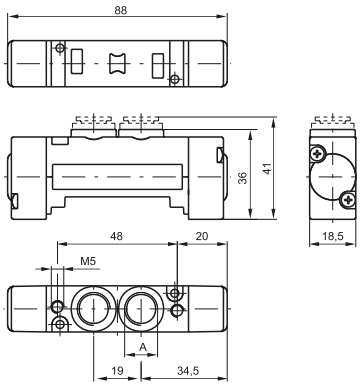

For dimension "A" see ordering code

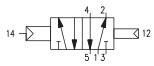

Pneumatic - Differential (External)

Coding: 243Ⓐ.52.00.17

Operational characteristics	
Fluid	Filtered air. No lubrication needed, if applied it shall be continuous
Max working pressure (bar)	10
Maximum piloting pressure (bar)	2
Temperature °C	-5 ÷ +50
Flow rate at 6 bar with Δp=1 (Nl/min)	800
Orifice size (mm)	7
Pilot ports size	M5

	WORKING PORTS SIZE
Ⓐ	**1** = G1/4"
	5 = G1/8"
	6 = Quick fitting tube Ø6
	8 = Quick fitting tube Ø8

Weight 105 g

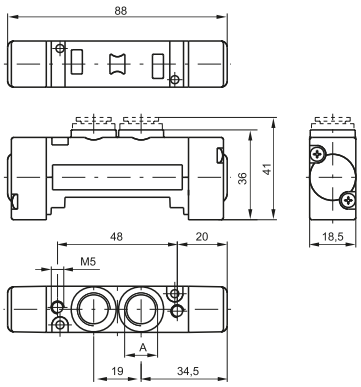

For dimension "A" see ordering code

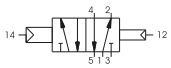

Pneumatic - Pneumatic

Coding: 243Ⓐ.52.00.18

Operational characteristics	
Fluid	Filtered air. No lubrication needed, if applied it shall be continuous
Max working pressure (bar)	10
Maximum piloting pressure (bar)	1.5
Temperature °C	-5 ÷ +50
Flow rate at 6 bar with Δp=1 (Nl/min)	800
Orifice size (mm)	7
Pilot ports size	M5

	WORKING PORTS SIZE
Ⓐ	**1** = G1/4"
	5 = G1/8"
	6 = Quick fitting tube Ø6
	8 = Quick fitting tube Ø8

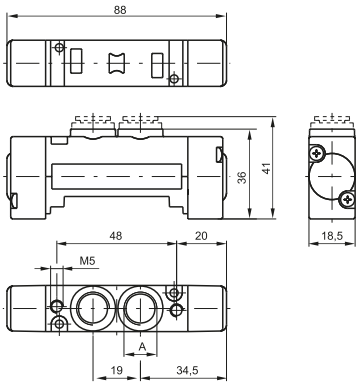

Weight 105 g

For dimension "A" see ordering code

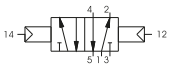

Solenoid-Spring / Differential

Coding: 243Ⓐ.52.00.Ⓥ.Ⓣ

Operational characteristics	
Fluid	Filtered air. No lubrication needed, if applied it shall be continuous
Max working pressure (bar)	10
Maximum piloting pressure (bar)	2
Temperature °C	-5 ÷ +50
Flow rate at 6 bar with Δp=1 (Nl/min)	800
Orifice size (mm)	7
Pilot ports size	M5

	WORKING PORTS SIZE
Ⓐ	**1** = G1/4"
	5 = G1/8"
	6 = Quick fitting tube Ø6
	8 = Quick fitting tube Ø8
	VERSION
Ⓥ	**39** = Solenoid - Spring
	29 = Solenoid external-Spring
	36 = Solenoid-Differerential
	37 = Solenoid-Differential external
	26 = Solenoid external-Differerential
	27 = Solenoid external-Differential external
	VOLTAGE
Ⓣ	**01** = 12V DC
	02 = 24V DC
	05 = 24V AC
	06 = 110V AC
	07 = 230 V AC
	08 = 24V DC 1W
	09 = 24V DC downward
	11 = 12V DC downward
	12 = 24V DC downward
	15 = 24V AC downward
	16 = 110V AC downward
	17 = 230 V AC downward
	18 = 24V DC 1W downward
	19 = 24V DC Earth faston downward

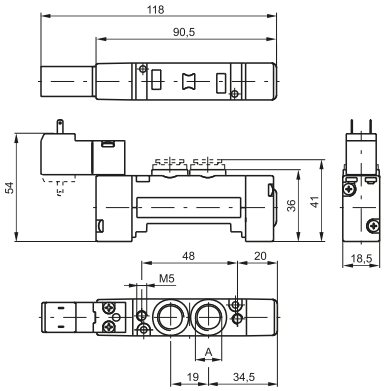

For dimension "A" see ordering code

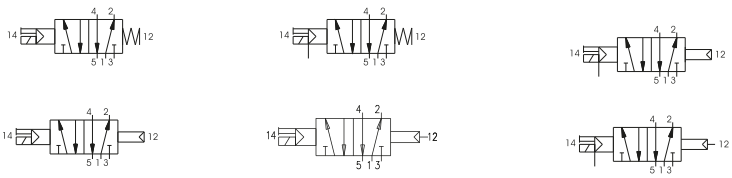

Weight 140 g

Overall dimensions and technical information are provided solely for informative purposes and may be modified without notice

Solenoid - Solenoid

Coding: 243Ⓐ.52.00.Ⓥ.Ⓣ

Operational characteristics	
Fluid	Filtered air. No lubrication needed, if applied it shall be continuous
Max working pressure (bar)	10
Maximum piloting pressure (bar)	1.5
Temperature °C	-5 ÷ +50
Flow rate at 6 bar with Δp=1 (Nl/min)	800
Orifice size (mm)	7
Pilot ports size	M5

Ⓐ	WORKING PORTS SIZE
	1 = G1/4"
	5 = G1/8"
	6 = Quick fitting tube Ø6
	8 = Quick fitting tube Ø8
Ⓥ	VERSION
	35 = Solenoid-Solenoid
	24 = Solenoid external-Solenoid external
Ⓣ	VOLTAGE
	01 = 12V DC
	02 = 24V DC
	05 = 24V AC
	06 = 110V AC
	07 = 230 V AC
	08 = 24V DC 1W
	09 = 24V DC downward
	11 = 12V DC downward
	12 = 24V DC downward
	15 = 24V AC downward
	16 = 110V AC downward
	17 = 230 V AC downward
	18 = 24V DC 1W downward
	19 = 24V DC Earth faston downward

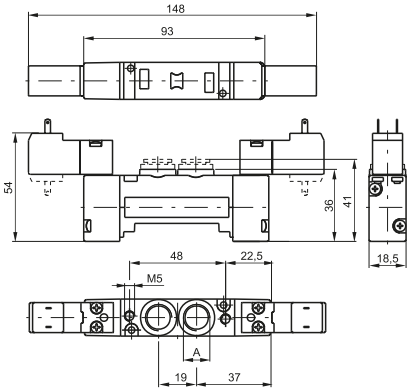

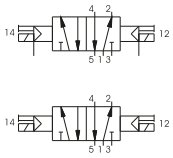

Weight 175 g

For dimension "A" see ordering code

Pneumatic - Pneumatic 5 ways 3 connections

Coding: 243Ⓐ.53.Ⓕ.18

Operational characteristics	
Fluid	Filtered air. No lubrication needed, if applied it shall be continuous
Max working pressure (bar)	10
Maximum piloting pressure (bar)	3
Temperature °C	-5 ÷ +50
Flow rate at 6 bar with Δp=1 (Nl/min)	650
Orifice size (mm)	7
Pilot ports size	M5

Ⓐ	WORKING PORTS SIZE
	1 = G1/4"
	5 = G1/8"
	6 = Quick fitting tube Ø6
	8 = Quick fitting tube Ø8
Ⓕ	FUNCTION
	31 = Closed centres
	32 = Open centres
	33 = Pressured centres

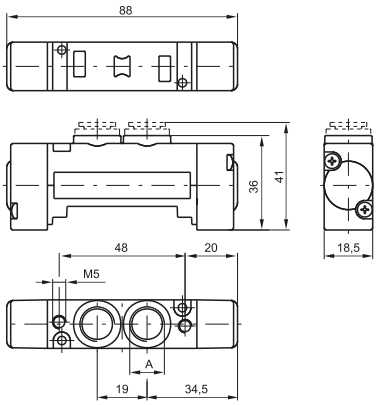

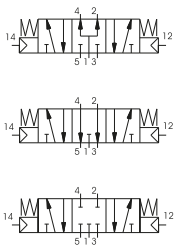

Weight 115 g

For dimension "A" see ordering code

Solenoid - Solenoid 5/3

Coding: 243Ⓐ.53.Ⓕ.Ⓥ.Ⓣ

Operational characteristics	
Fluid	Filtered air. No lubrication needed, if applied it shall be continuous
Max working pressure (bar)	10
Maximum piloting pressure (bar)	3
Temperature °C	-5 ÷ +50
Flow rate at 6 bar with Δp=1 (Nl/min)	650
Orifice size (mm)	7
Pilot ports size	M5

Ⓐ	WORKING PORTS SIZE
	1 = G1/4"
	5 = G1/8"
	6 = Quick fitting tube Ø6
	8 = Quick fitting tube Ø8
Ⓕ	FUNCTION
	31 = Closed centres
	32 = Open centres
	33 = Pressured centres
Ⓥ	VERSION
	24 = Solenoid external-Solenoid external
	35 = Solenoid-Solenoid
Ⓣ	VOLTAGE
	01 = 12V DC
	02 = 24V DC
	05 = 24V AC
	06 = 110V AC
	07 = 230 V AC
	08 = 24V DC 1W
	09 = 24V DC downward
	11 = 12V DC downward
	12 = 24V DC downward
	15 = 24V AC downward
	16 = 110V AC downward
	17 = 230 V AC downward
	18 = 24V DC 1W downward
	19 = 24V DC Earth faston downward

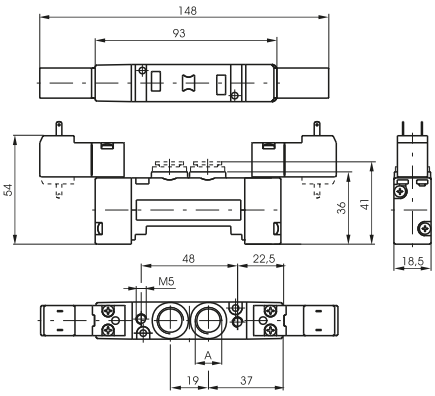

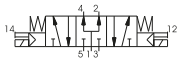

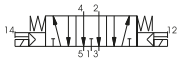

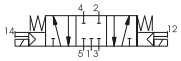

Weight 185 g

For dimension "A" see ordering code

Pneumatic-Pneumatic 2 x 3/2

Coding: 243Ⓐ.62.Ⓕ.18

Operational characteristics	
Fluid	Filtered air. No lubrication needed, if applied it shall be continuous
Max working pressure (bar)	10
Maximum piloting pressure (bar)	≥1,5+(0,2xInlet pressure)
Temperature °C	-5 ÷ +50
Flow rate at 6 bar with Δp=1 (Nl/min)	450
Orifice size (mm)	7

*Example: if inlet pressure is set at 5bar then pilot pressure must be at least Pp=1,5+(0.2*5)=2,5bar*

Ⓐ	WORKING PORTS SIZE
	1 = G1/4"
	5 = G1/8"
	6 = Quick fitting tube Ø6
	8 = Quick fitting tube Ø8
Ⓕ	FUNCTION
	44 = 2 Coils 3/2 NC
	45 = 1 Coil 3/2 NC (14) + 1 Coil 3/2 NO (12)
	55 = 2 Coils 3/2 NO
	54 = 1 Coil 3/2 NO (14) + 1 Coil 3/2 NC (12)

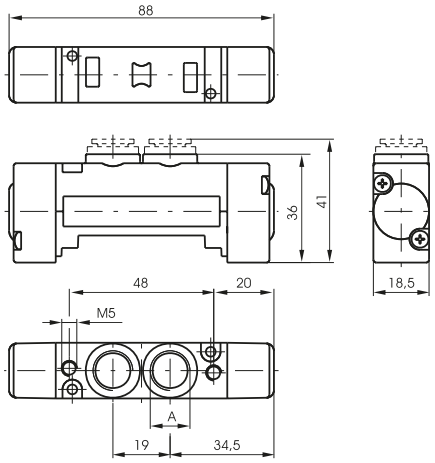

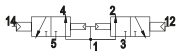

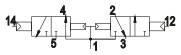

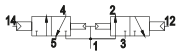

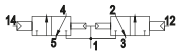

Weight 110 g

For dimension "A" see ordering code

Overall dimensions and technical information are provided solely for informative purposes and may be modified without notice

Solenoid - Solenoid 2 x 3/2

Coding: 243Ⓐ.62.Ⓕ.35.Ⓣ

Operational characteristics	
Fluid	Filtered air. No lubrication needed, if applied it shall be continuous
Max working pressure (bar)	10
Maximum piloting pressure (bar)	≥1,5+(0,2xInlet pressure)
Temperature °C	-5 ÷ +50
Flow rate at 6 bar with Δp=1 (Nl/min)	450
Orifice size (mm)	7

*Example: if inlet pressure is set at 5bar then pilot pressure must be at least Pp=1,5+(0.2*5)=2,5bar*

Ⓐ	WORKING PORTS SIZE
	1 = G1/4"
	5 = G1/8"
	6 = Quick fitting tube Ø6
	8 = Quick fitting tube Ø8
Ⓕ	FUNCTION
	44 = 2 Coils 3/2 NC
	45 = 1 Coil 3/2 NC (14) + 1 Coil 3/2 NO (12)
	55 = 2 Coils 3/2 NO
	54 = 1 Coil 3/2 NO (14) + 1 Coil 3/2 NC (12)
Ⓣ	VOLTAGE
	01 = 12V DC
	02 = 24V DC
	05 = 24V AC
	06 = 110V AC
	07 = 230 V AC
	08 = 24V DC 1 Watt
	09 = 24V DC downward
	11 = 12V DC downward
	12 = 24V DC downward
	15 = 24V AC downward
	16 = 110V AC downward
	17 = 230 V AC downward
	18 = 24V DC 1 Watt downward
	19 = 24V DC Earth faston downward

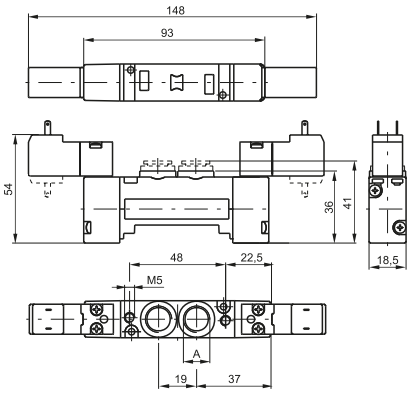

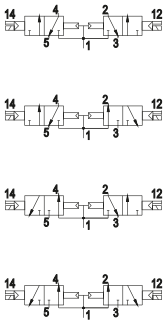

Weight 190 g

For dimension "A" see ordering code

Modular base

Coding: 2430.Ⓥ

	VERSION
Ⓥ	**01** = Modular base
	06 = Supply and exhaust closed
	07 = Supply closed
	08 = Exhaust closed

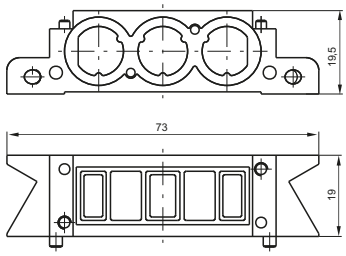

Weight 85 g

Blanck base

Coding: 2430.05

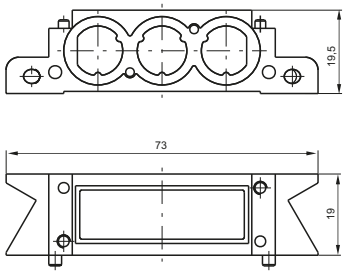

Weight 85 g

Inlet base

Coding: 2430.Ⓥ

	VERSION
Ⓥ	**02** = Right
	03 = Left

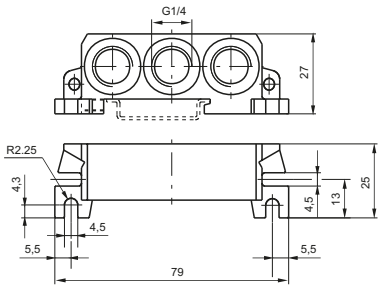

Weight 120 g

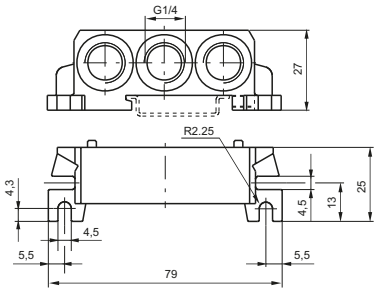

Weight 125 g

Intermediate air intake

Coding: 2430.10

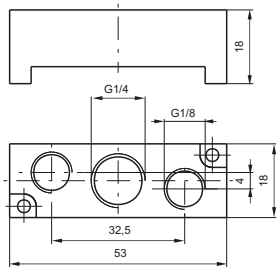

Weight 30 g
to be assembled instead of a valve

Overall dimensions and technical information are provided solely for informative purposes and may be modified without notice

Closing plate

Coding: 2430.00

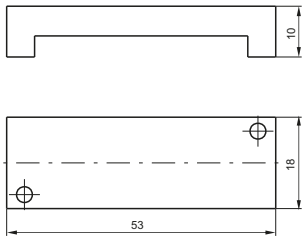

Weight 20 g

Diaphragm plug

Coding: 2430.17

Weight 5 g

Pneumatic - Spring

Coding: 2445.52.00.19

Operational characteristics	
Fluid	Filtered air. No lubrication needed, if applied it shall be continuous
Max working pressure (bar)	10
Pressure range (bar)	2
Temperature °C	-5 ÷ +50
Flow rate at 6 bar with Δp=1 (Nl/min)	550
Orifice size (mm)	5

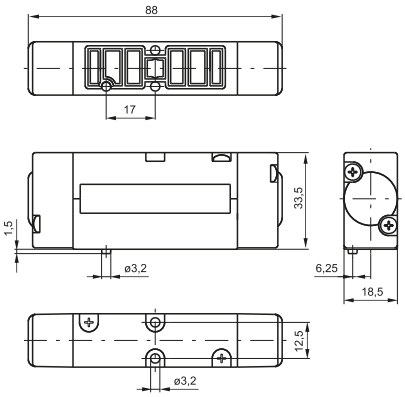

Weight 155 g

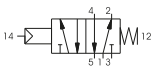

Pneumatic - Differential

Coding: 2445.52.00.16

Operational characteristics	
Fluid	Filtered air. No lubrication needed, if applied it shall be continuous
Max working pressure (bar)	10
Maximum piloting pressure (bar)	2
Temperature °C	-5 ÷ +50
Flow rate at 6 bar with Δp=1 (Nl/min)	550
Orifice size (mm)	5

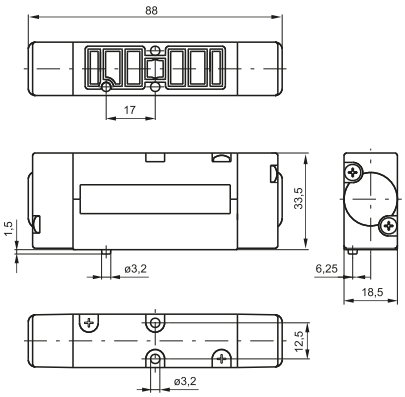

Weight 155 g

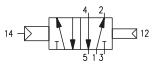

Pneumatic - Differential (External)

Coding: 2445.52.00.17

Operational characteristics	
Fluid	Filtered air. No lubrication needed, if applied it shall be continuous
Max working pressure (bar)	10
Maximum piloting pressure (bar)	2
Temperature °C	-5 ÷ +50
Flow rate at 6 bar with Δp=1 (Nl/min)	550
Orifice size (mm)	5

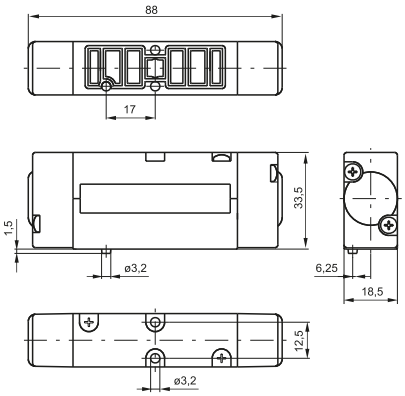

Weight 155 g

Overall dimensions and technical information are provided solely for informative purposes and may be modified without notice

Pneumatic - Pneumatic

Coding: 2445.52.00.18

Operational characteristics	
Fluid	Filtered air. No lubrication needed, if applied it shall be continuous
Max working pressure (bar)	10
Maximum piloting pressure (bar)	1.5
Temperature °C	-5 ÷ +50
Flow rate at 6 bar with Δp=1 (Nl/min)	550
Orifice size (mm)	5

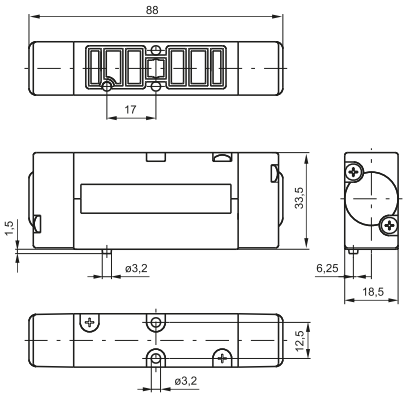

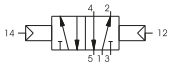

Weight 155 g

Solenoid-Spring / Differential

Coding: 244Ⓒ.52.00.Ⓥ.Ⓣ

Operational characteristics	
Fluid	Filtered air. No lubrication needed, if applied it shall be continuous
Max working pressure (bar)	10
Maximum piloting pressure (bar)	2
Temperature °C	-5 ÷ +50
Flow rate at 6 bar with Δp=1 (Nl/min)	550
Orifice size (mm)	5

Ⓒ	TYPE ELECTROPILOT EXHAUST
	1 = on base (only for self feeding valves)
	5 = on pilot (for all version)
Ⓥ	VERSION
	39 = Solenoid - Spring
	29 = Solenoid external-Spring
	36 = Solenoid-Differential
	37 = Solenoid-Differerential external
	26 = Solenoid external-Differerential
	27 = Solenoid external-Differerential external
Ⓣ	VOLTAGE
	01 = 12V DC
	02 = 24V DC
	05 = 24V AC
	06 = 110V AC
	07 = 230 V AC
	08 = 24V DC 1W
	09 = 24V DC downward
	11 = 12V DC downward
	12 = 24V DC downward
	15 = 24V AC downward
	16 = 110V AC downward
	17 = 230 V AC downward
	18 = 24V DC 1W downward
	19 = 24V DC Earth faston downward

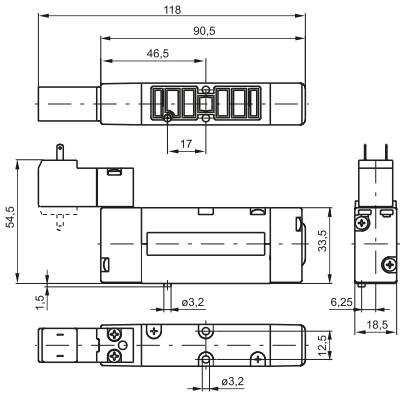

Weight 190 g

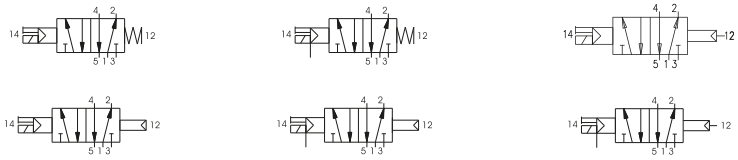

Solenoid - Solenoid

Coding: 244Ⓒ.52.00.Ⓥ.Ⓣ

Operational characteristics	
Fluid	Filtered air. No lubrication needed, if applied it shall be continuous
Max working pressure (bar)	10
Maximum piloting pressure (bar)	1.5
Temperature °C	-5 ÷ +50
Flow rate at 6 bar with Δp=1 (Nl/min)	550
Orifice size (mm)	5

Ⓒ	TYPE ELECTROPILOT EXHAUST
	1 = on base (only for self feeding valves)
	5 = on pilot (for all version)
Ⓥ	VERSION
	24 = Solenoid external-Solenoid external
	35 = Solenoid-Solenoid
Ⓣ	VOLTAGE
	01 = 12V DC
	02 = 24V DC
	05 = 24V AC
	06 = 110V AC
	07 = 230 V AC
	08 = 24V DC 1W
	09 = 24V DC downward
	11 = 12V DC downward
	12 = 24V DC downward
	15 = 24V AC downward
	16 = 110V AC downward
	17 = 230 V AC downward
	18 = 24V DC 1W downward
	19 = 24V DC Earth faston downward

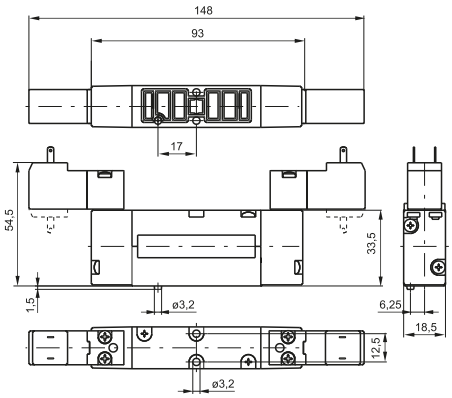

Weight 225 g

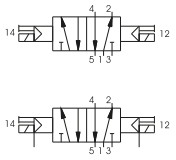

Overall dimensions and technical information are provided solely for informative purposes and may be modified without notice

Pneumatic - Pneumatic 5 ways 3 connections

Coding: 244Ⓒ.53.Ⓕ.18

Operational characteristics	
Fluid	Filtered air. No lubrication needed, if applied it shall be continuous
Max working pressure (bar)	10
Maximum piloting pressure (bar)	3
Temperature °C	-5 ÷ +50
Flow rate at 6 bar with Δp=1 (Nl/min)	550
Orifice size (mm)	5

Ⓒ	TYPE ELECTROPILOT EXHAUST
	1 = on base (only for self feeding valves)
	5 = on pilot (for all version)
Ⓕ	FUNCTION
	31 = Closed centres
	32 = Open centres
	33 = Pressured centres

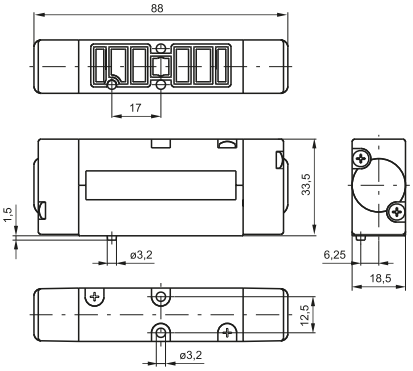

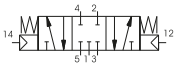

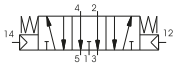

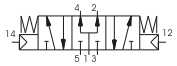

Weight 165 g

Solenoid - Solenoid 5 ways 3 connections

Coding: 244Ⓒ.53.Ⓕ.Ⓥ.Ⓣ

Operational characteristics	
Fluid	Filtered air. No lubrication needed, if applied it shall be continuous
Max working pressure (bar)	10
Maximum piloting pressure (bar)	3
Temperature °C	-5 ÷ +50
Flow rate at 6 bar with Δp=1 (Nl/min)	550
Orifice size (mm)	5

Ⓒ	TYPE ELECTROPILOT EXHAUST
	1 = on base (only for self feeding valves)
	5 = on pilot (for all version)
Ⓕ	FUNCTION
	31 = Closed centres
	32 = Open centres
	33 = Pressured centres
Ⓥ	VERSION
	24 = Solenoid external-Solenoid external
	35 = Solenoid-Solenoid
Ⓣ	VOLTAGE
	01 = 12V DC
	02 = 24V DC
	05 = 24V AC
	06 = 110V AC
	07 = 230 V AC
	08 = 24V DC 1W
	09 = 24V DC downward
	11 = 12V DC downward
	12 = 24V DC downward
	15 = 24V AC downward
	16 = 110V AC downward
	17 = 230 V AC downward
	18 = 24V DC 1W downward
	19 = 24V DC Earth faston downward

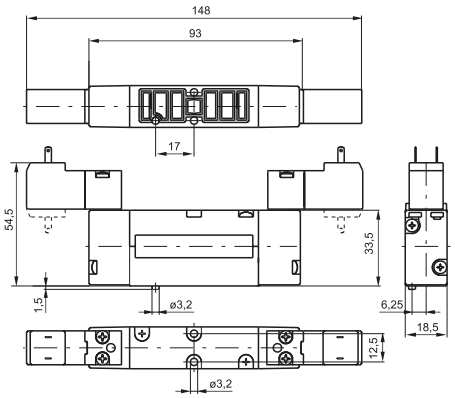

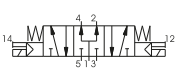

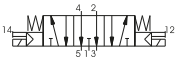

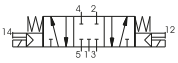

Weight 235 g

Pneumatic-Pneumatic 2 x 3/2

Coding: 2445.62.Ⓕ.18

Operational characteristics	
Fluid	Filtered air. No lubrication needed, if applied it shall be continuous
Max working pressure (bar)	10
Maximum piloting pressure (bar)	≥1,5+(0,2xInlet pressure)
Temperature °C	-5 ÷ +50
Flow rate at 6 bar with Δp=1 (Nl/min)	450
Orifice size (mm)	5

	FUNCTION
Ⓕ	**44** = 2 Coils 3/2 NC
	45 = 1 Coil 3/2 NC (14) + 1 Coil 3/2 NO (12)
	55 = 2 Coils 3/2 NO
	54 = 1 Coil 3/2 NO (14) + 1 Coil 3/2 NC (12)

*Example: if inlet pressure is set at 5bar then pilot pressure must be at least Pp=1,5+(0.2*5)=2,5bar*

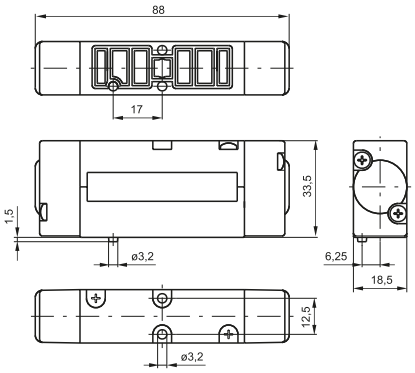

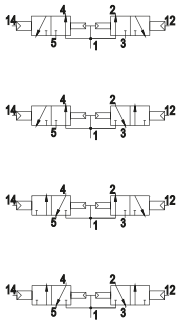

Weight 170 g

Solenoid - Solenoid 2 x 3/2

Coding: 2445.62.Ⓕ.35.Ⓣ

Operational characteristics	
Fluid	Filtered air. No lubrication needed, if applied it shall be continuous
Max working pressure (bar)	10
Maximum piloting pressure (bar)	≥1,5+(0,2xInlet pressure)
Temperature °C	-5 ÷ +50
Flow rate at 6 bar with Δp=1 (Nl/min)	450
Orifice size (mm)	5

	FUNCTION
Ⓕ	**44** = 2 Coils 3/2 NC
	45 = 1 Coil 3/2 NC (14) + 1 Coil 3/2 NO (12)
	55 = 2 Coils 3/2 NO
	54 = 1 Coil 3/2 NO (14) + 1 Coil 3/2 NC (12)

	VOLTAGE
Ⓣ	**01** = 12V DC
	02 = 24V DC
	05 = 24V AC
	06 = 110V AC
	07 = 230 V AC
	08 = 24V DC 1 Watt
	09 = 24V DC downward
	11 = 12V DC downward
	12 = 24V DC downward
	15 = 24V AC downward
	16 = 110V AC downward
	17 = 230 V AC downward
	18 = 24V DC 1 Watt downward
	19 = 24V DC Earth faston downward

*Example: if inlet pressure is set at 5bar then pilot pressure must be at least Pp=1,5+(0.2*5)=2,5bar*

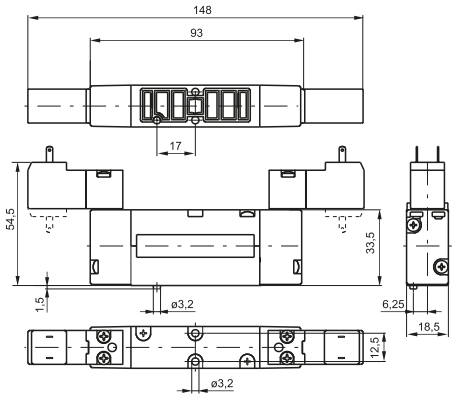

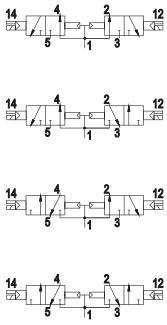

Weight 250 g

Overall dimensions and technical information are provided solely for informative purposes and may be modified without notice

Modular base

Coding: 2440.Ⓥ

Ⓥ	VERSION
	01 = Modular base
	06 = Supply and exhaust closed
	07 = Supply closed
	08 = Exhaust closed

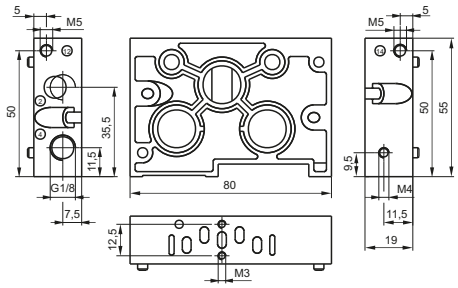

Inlet base

Coding: 2440.Ⓥ

Ⓥ	VERSION
	02 = Right
	03 = Left

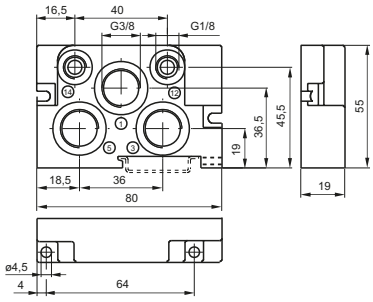

Weight 110 g

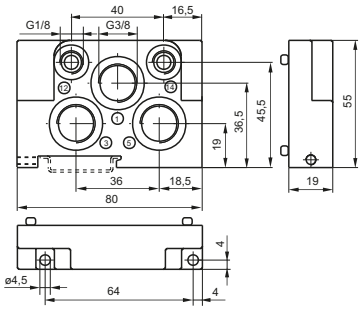

Weight 110 g

Intermediate air intake

Coding: 2440.10

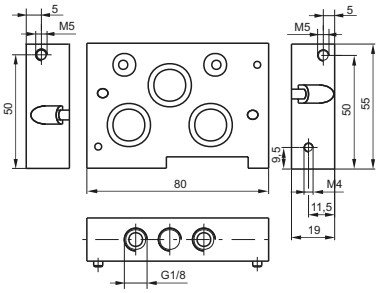

Weight 185 g

Closing plate

Coding: 2440.00

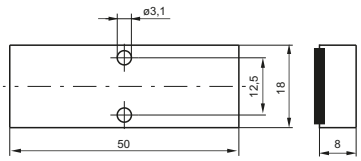

Weight 25 g

Diaphragm plug

Coding: 2440.17

The integral electrical design for the series 2400 valve is extremely flexible, allowing the production of pre-wired solenoid valve manifolds, the configuration of which can be determined at the point of assembly. The 24 VDC, 12 VDC (equivalent PNP) and 24 VAC* modules are available with 2 or 4 positions. The system assembled is designed for an IP40 protection. IP65 is available on request.

* Attention : If the working tension is 24 VAC DO NOT using modules with protection diode

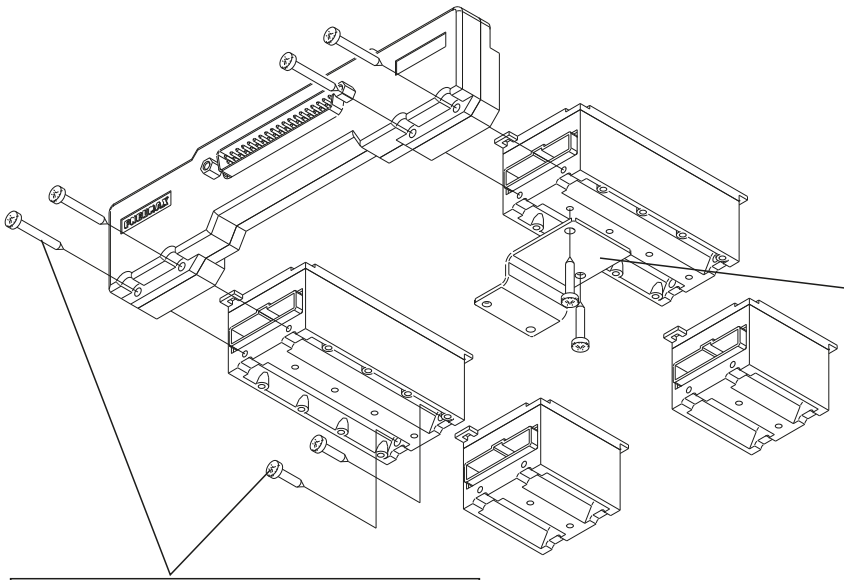

Support plates are supplied to mount the electrical connection elements to the manifold modules. Individual valves can still be removed from the manifold even after assembly is complete. One support plate is required per element.

The elements connect together using an upper coupling and lower fixing screw.

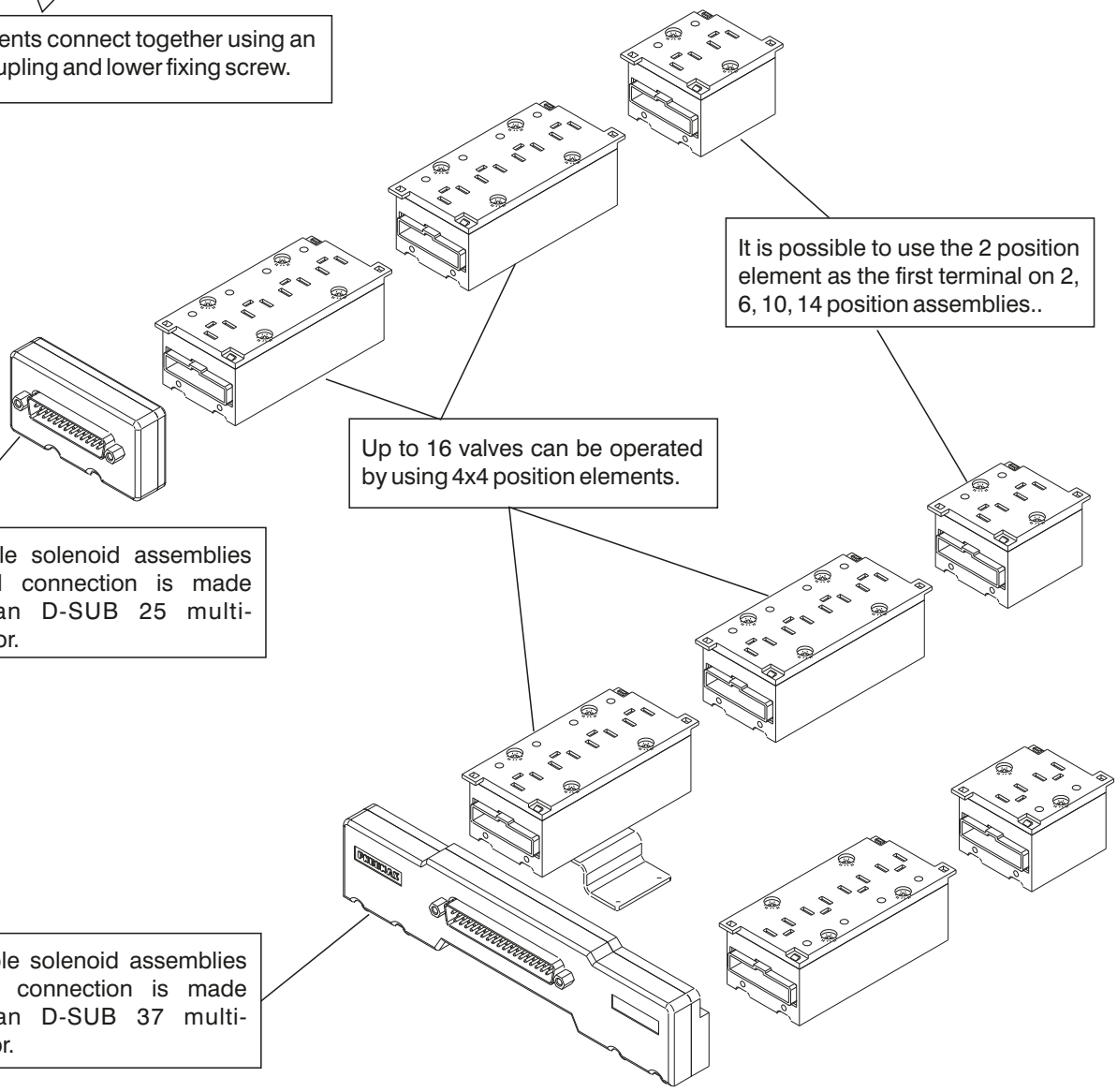

It is possible to use the 2 position element as the first terminal on 2, 6, 10, 14 position assemblies..

Up to 16 valves can be operated by using 4x4 position elements.

On single solenoid assemblies electrical connection is made using an D-SUB 25 multi-connector.

On double solenoid assemblies electrical connection is made usinfg an D-SUB 37 multi-connector.

Overall dimensions and technical information are provided solely for informative purposes and may be modified without notice

Module for connections

Coding: 2400.Ⓟ.Ⓣ

Ⓟ	POSITIONS
	04 = 4 positions
	02 = 2 positions
Ⓣ	TYPE
	00 = Left IP40-PNP
	02 = Left IP40-PNP with protection diode
	10 = Left IP65-PNP
	12 = Left IP65-PNP with protection diode
	01 = Right IP40-PNP
	03 = Right IP40-PNP with protection diode
	11 = Right IP65-PNP
	13 = Right IP65-PNP with protection diode

Weight 30 g
* only for VDC

2400.02.Ⓣ

Weight 50 g
* only for VDC

2400.04.Ⓣ

Front connector IP65

Coding: 2400.Ⓟ.10

Ⓟ	POLES
	37 = 37 poles
	25 = 25 poles

Weight 120 g
The IP65 protection is obtained by IP65 Pneumax cable

2400.37.10

Weight 40 g
The IP65 protection is obtained by IP65 Pneumax cable

2400.25.10

Plug

Coding: 2400.00

Weight 5 g

Closing plate electrical positions

Coding: 2400.15.00

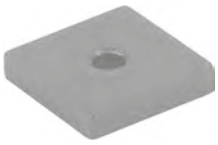

Weight 2 g

VDMA support plate

Coding: 2440.50

Weight 20 g

FLAT support plate

Coding: 2430.50

Weight 20 g

Overall dimensions and technical information are provided solely for informative purposes and may be modified without notice

4 positions box with 25 contacts connector

Coding: 2400.04.25

Weight 65 g

15mm male connector with 2 metres cable

Coding: 2400.15.02

Weight 98 g

In line cable complete with connector IP40

Coding: 2400.Ⓣ.Ⓛ.00

Ⓣ	CONNECTORS
	25 = 25 poles
	37 = 37 poles
Ⓛ	CABLE LENGTH
	03 = 3 meters
	05 = 5 meters
	10 = 10 meters

2400.Ⓣ.Ⓛ.00

Cable complete with connector, 25 Poles IP65

Coding: 2300.25.Ⓛ.Ⓒ

Ⓛ	CABLE LENGTH
	03 = 3 meters
	05 = 5 meters
	10 = 10 meters
Ⓕ	FUNCTION
	31 = Closed centres
	32 = Open centres
	33 = Pressured centres

Cable complete with connector, 37 Poles IP65

Coding: 2400.37.Ⓛ.Ⓒ

Ⓛ	CABLE LENGTH
	03 = 3 meters
	05 = 5 meters
	10 = 10 meters
Ⓕ	FUNCTION
	31 = Closed centres
	32 = Open centres
	33 = Pressured centres

Overall dimensions and technical information are provided solely for informative purposes and may be modified without notice

SUB-D 25 CONTACTS CONNECTOR

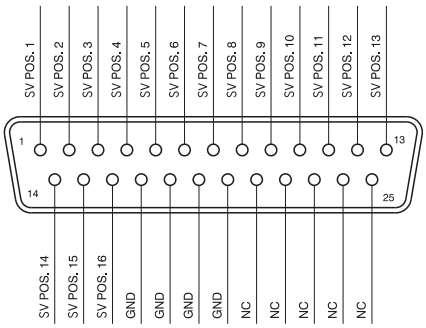

SUB-D 37 CONTACTS CONNECTOR

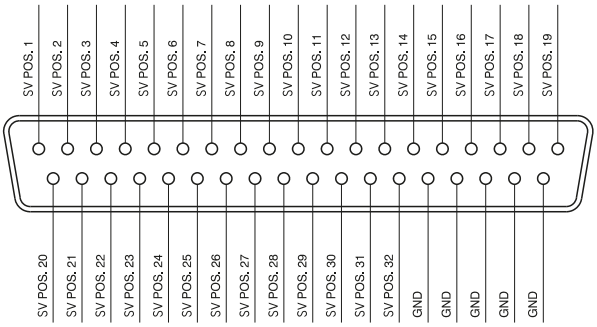

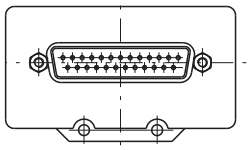

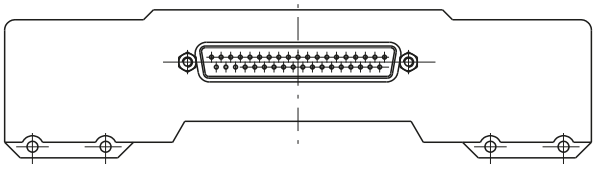

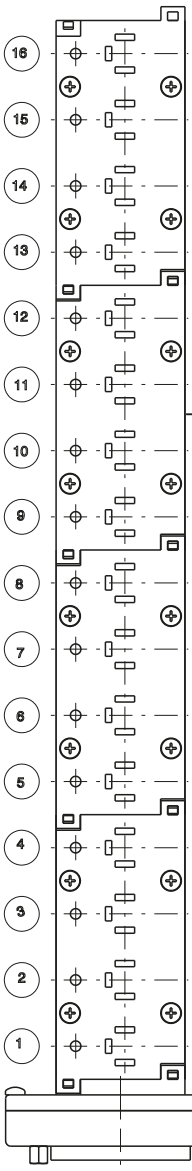

Left modules

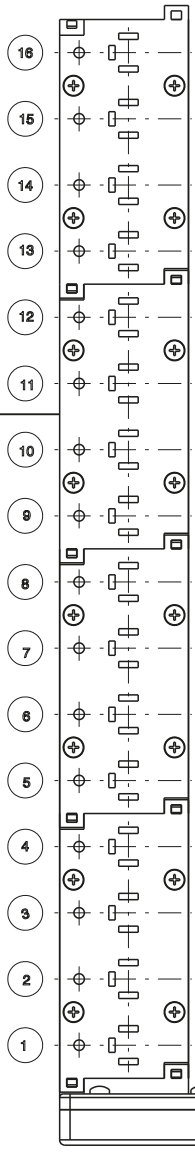

Right modules

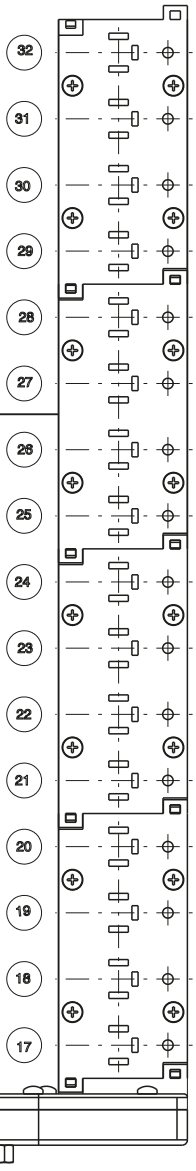

Series 2600

General

They have been designed to be easily assembled into groups or manifolds.
The 2600 series comprises a range of products classified according to the body size of 26mm divided into 3 types "LINE", "FLAT" and "VDMA".
Is not included the integral electrical connection

Construction characteristics

Central body	Extruded aluminium bar with chemical nickel treatment and PTFE (polytetrafleurethylene)
Connection plates	Die-cast aluminium
Operators	Technopolymer
Spool seals	Oil resistant nitrile rubber - HNBR
Spools	Aluminium 2011
Springs	AISI 302 stainless steel
Pistons	Technopolymer
Piston seals	Oil resistant nitrile rubber - NBR

Ordering codes for minature solenoid valves

The 15 mm. miniature solenoid valve with 1,1 mm. orifice has been selected for piloting this series of valves (see Series 300).
This results in low response times and reduced power consumption.
The valve can be supplied with the coil upward or downward (multipolar connections) depending on the application.
Codes are as follows:

Coil upward code

01 = miniature solenoid 12 VDC
02 = miniature solenoid 24 VDC
05 = miniature solenoid 24 VAC
06 = miniature solenoid 110 VAC
07 = miniature sol. 230 VAC
08 = miniature sol. 24 VDC 1W
09 = miniature sol. 24 VDC Earth faston

Coil downward code

11 = miniature solenoid 12 VDC
12 = miniature solenoid 24 VDC
15 = miniature solenoid 24 VAC
16 = miniature solenoid 110 VAC
17 = miniature sol. 230 VAC
18 = miniature sol. 24 VDC 1W Downward
19 = miniature sol. 24 VDC Earth faston Downward

Miniature solenoid c UL us homologated are available (see Series 300).

Use and maintenance

The average life of the solenoid valve exceeds 50.000.000 cycles when used under optimum conditions.
Adequate lubrication reduces seals wear, just as proper filtering of supply air prevents the build-up of dirt that can cause malfunction.
Ensure the valve is used within our recommended criteria for pressure and temperature.
In dirty or dusty environments, the exhaust ports should be protected.
A seal kit including the spool is available for overhauling the valve. This operation does not require a skilled worker, although a particular care should be taken when reassembling the valve.

Overall dimensions and technical information are provided solely for informative purposes and may be modified without notice

Pneumatic - Spring

Coding: 261Ⓐ.52.00.19

Operational characteristics	
Fluid	Filtered air. No lubrication needed, if applied it shall be continuous
Max working pressure (bar)	10
Temperature °C	-5 ÷ +50
Flow rate at 6 bar with Δp=1 (Nl/min)	1500
Orifice size (mm)	9
Pilot ports size	G1/8"

	WORKING PORTS SIZE
Ⓐ	**1** = G3/8"
	5 = G1/4"
	8 = Quick fitting tube Ø10

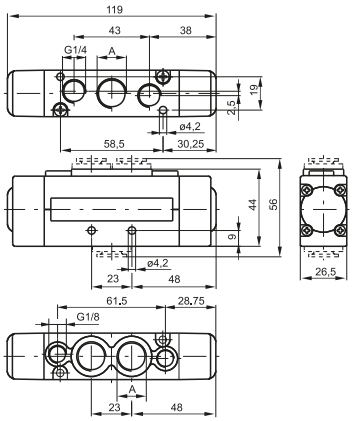

Weight 235 g
Minimum piloting pressure 2 bar

For dimension "A" see ordering code

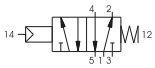

Pneumatic - Differential

Coding: 261Ⓐ.52.00.16

Operational characteristics	
Fluid	Filtered air. No lubrication needed, if applied it shall be continuous
Max working pressure (bar)	10
Temperature °C	-5 ÷ +50
Flow rate at 6 bar with Δp=1 (Nl/min)	1500
Orifice size (mm)	9
Pilot ports size	G1/8"

	WORKING PORTS SIZE
Ⓐ	**1** = G3/8"
	5 = G1/4"
	8 = Quick fitting tube Ø10

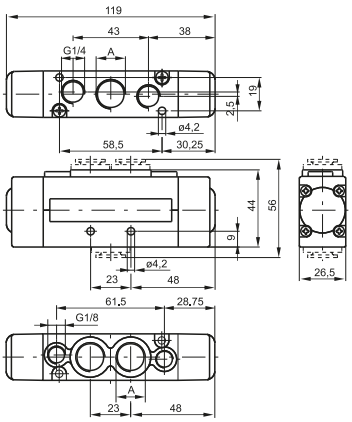

Weight 235 g
Minimum piloting pressure 2 bar

For dimension "A" see ordering code

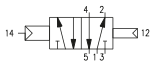

Pneumatic - Differential (External)

Coding: 261Ⓐ.52.00.17

Operational characteristics	
Fluid	Filtered air. No lubrication needed, if applied it shall be continuous
Max working pressure (bar)	10
Temperature °C	-5 ÷ +50
Flow rate at 6 bar with Δp=1 (Nl/min)	1500
Orifice size (mm)	9
Pilot ports size	G1/8"

	WORKING PORTS SIZE
Ⓐ	**1** = G3/8"
	5 = G1/4"
	8 = Quick fitting tube Ø10

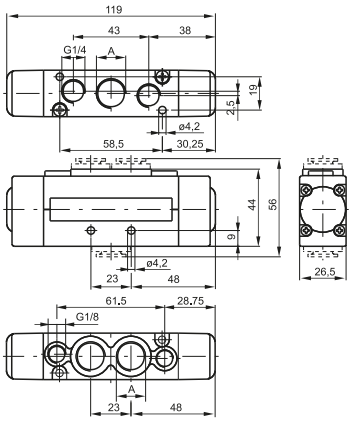

Weight 235 g
Minimum piloting pressure 2 bar

For dimension "A" see ordering code

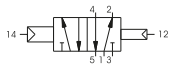

Pneumatic - Pneumatic

Coding: 261Ⓐ.52.00.18

Operational characteristics	
Fluid	Filtered air. No lubrication needed, if applied it shall be continuous
Max working pressure (bar)	10
Temperature °C	-5 ÷ +50
Flow rate at 6 bar with Δp=1 (Nl/min)	1500
Orifice size (mm)	9
Pilot ports size	G1/8"

	WORKING PORTS SIZE
Ⓐ	**1** = G3/8"
	5 = G1/4"
	8 = Quick fitting tube Ø10

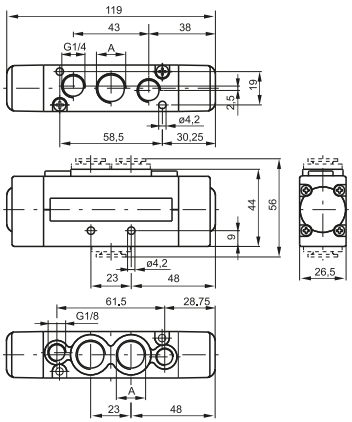

Weight 235 g
Minimum piloting pressure 1,5 bar

For dimension "A" see ordering code

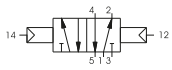

Overall dimensions and technical information are provided solely for informative purposes and may be modified without notice

Solenoid-Spring/Differerential

Coding: 261Ⓐ.52.00.Ⓥ.Ⓣ

Operational characteristics	
Fluid	Filtered air. No lubrication needed, if applied it shall be continuous
Max working pressure (bar)	10
Temperature °C	-5 ÷ +50
Flow rate at 6 bar with Δp=1 (Nl/min)	1500
Orifice size (mm)	9

Ⓐ	WORKING PORTS SIZE
	1 = G3/8"
	5 = G1/4"
	8 = Quick fitting tube Ø10
Ⓥ	VERSION
	39 = Solenoid - Spring
	29 = Solenoid external-Spring
	36 = Solenoid-Differerential
	37 = Solenoid-Differential external
	26 = Solenoid external-Differerential
	27 = Solenoid external-Differential external
Ⓣ	VOLTAGE
	01 = 12V DC
	02 = 24V DC
	05 = 24V AC
	06 = 110V AC
	07 = 230 V AC
	08 = 24V DC 1W
	09 = 24V DC downward
	11 = 12V DC downward
	12 = 24V DC downward
	15 = 24V AC downward
	16 = 110V AC downward
	17 = 230 V AC downward
	18 = 24V DC 1W downward
	19 = 24V DC Earth faston downward

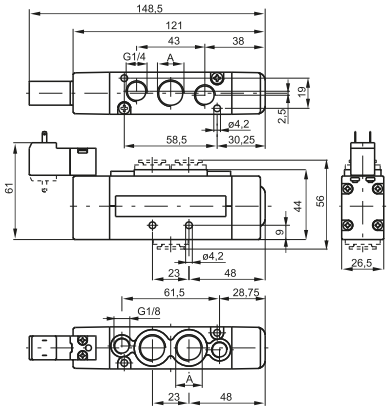

Weight 275 g
Minimum piloting pressure 2 bar

For dimension "A" see ordering code

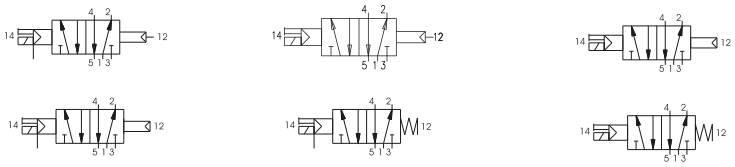

Solenoid - Solenoid

Coding: 261Ⓐ.52.00.Ⓥ.Ⓣ

Operational characteristics	
Fluid	Filtered air. No lubrication needed, if applied it shall be continuous
Max working pressure (bar)	10
Temperature °C	-5 ÷ +50
Flow rate at 6 bar with Δp=1 (Nl/min)	1500
Orifice size (mm)	9

Ⓐ	WORKING PORTS SIZE
	1 = G3/8"
	5 = G1/4"
	8 = Quick fitting tube Ø10
Ⓥ	VERSION
	35 = Solenoid-Solenoid
	24 = Solenoid external-Solenoid external
Ⓣ	VOLTAGE
	01 = 12V DC
	02 = 24V DC
	05 = 24V AC
	06 = 110V AC
	07 = 230 V AC
	08 = 24V DC 1W
	09 = 24V DC downward
	11 = 12V DC downward
	12 = 24V DC downward
	15 = 24V AC downward
	16 = 110V AC downward
	17 = 230 V AC downward
	18 = 24V DC 1W downward
	19 = 24V DC Earth faston downward

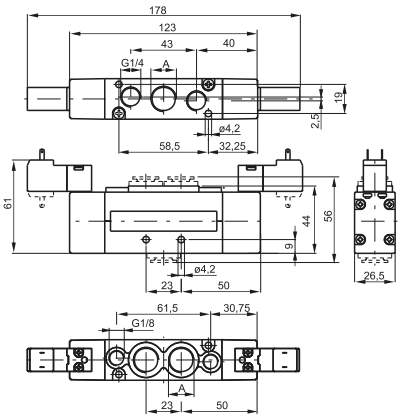

Weight 295 g
Minimum piloting pressure 1,5 bar

For dimension "A" see ordering code

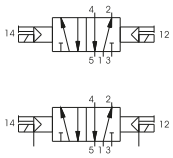

Pneumatic - Pneumatic 5 ways 3 connections

Coding: 261Ⓐ.53.Ⓕ.18

Operational characteristics	
Fluid	Filtered air. No lubrication needed, if applied it shall be continuous
Max working pressure (bar)	10
Temperature °C	-5 ÷ +50
Flow rate at 6 bar with Δp=1 (Nl/min)	1350
Orifice size (mm)	9
Pilot ports size	M5

Ⓐ	WORKING PORTS SIZE
	1 = G3/8"
	5 = G1/4"
	8 = Quick fitting tube Ø10
Ⓕ	FUNCTION
	31 = Closed centres
	32 = Open centres
	33 = Pressured centres

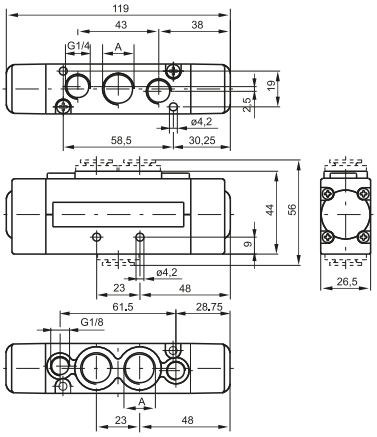

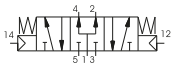

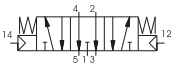

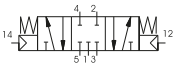

Weight 245 g
Minimum piloting pressure 3 bar

For dimension "A" see ordering code

Solenoid - Solenoid 5 ways 3 connections

Coding: 261Ⓐ.53.Ⓕ.Ⓥ.Ⓣ

Operational characteristics	
Fluid	Filtered air. No lubrication needed, if applied it shall be continuous
Max working pressure (bar)	10
Temperature °C	-5 ÷ +50
Flow rate at 6 bar with Δp=1 (Nl/min)	1350
Orifice size (mm)	9

Ⓐ	WORKING PORTS SIZE
	1 = G3/8"
	5 = G1/4"
	8 = Quick fitting tube Ø10
Ⓕ	FUNCTION
	31 = Closed centres
	32 = Open centres
	33 = Pressured centres
Ⓥ	VERSION
	24 = Solenoid external-Solenoid external
	35 = Solenoid-Solenoid
Ⓣ	VOLTAGE
	01 = 12V DC
	02 = 24V DC
	05 = 24V AC
	06 = 110V AC
	07 = 230 V AC
	08 = 24V DC 1W
	09 = 24V DC downward
	11 = 12V DC downward
	12 = 24V DC downward
	15 = 24V AC downward
	16 = 110V AC downward
	17 = 230 V AC downward
	18 = 24V DC 1W downward
	19 = 24V DC Earth faston downward

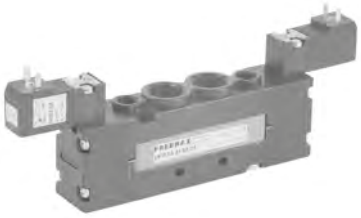

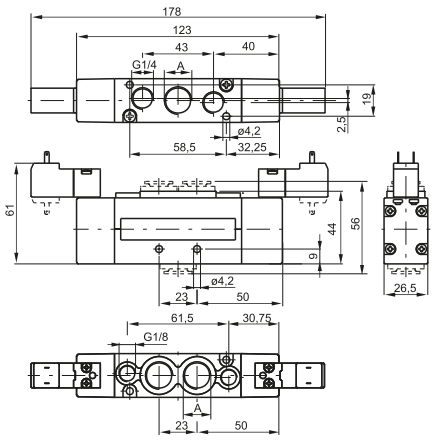

Weight 245 g
Minimum piloting pressure 3 bar

For dimension "A" see ordering code

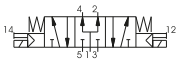

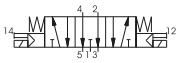

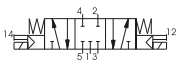

Overall dimensions and technical information are provided solely for informative purposes and may be modified without notice

Pneumatic - Spring

Coding: 263Ⓐ.52.00.19

Operational characteristics	
Fluid	Filtered air. No lubrication needed, if applied it shall be continuous
Max working pressure (bar)	10
Temperature °C	-5 ÷ +50
Flow rate at 6 bar with Δp=1 (Nl/min)	1500
Orifice size (mm)	9
Pilot ports size	M5

	WORKING PORTS SIZE
Ⓐ	**1** = G3/8"
	5 = G1/4"
	8 = Quick fitting tube Ø10

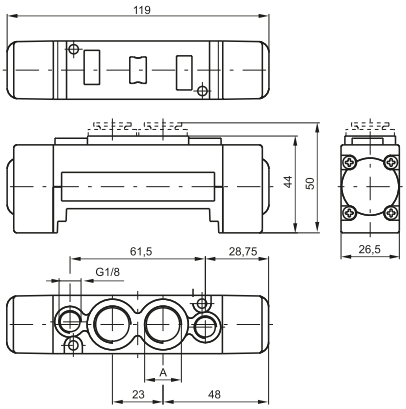

Weight 185 g
Minimum piloting pressure 2 bar

For dimension "A" see ordering code

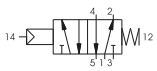

Pneumatic - Differential

Coding: 263Ⓐ.52.00.16

Operational characteristics	
Fluid	Filtered air. No lubrication needed, if applied it shall be continuous
Max working pressure (bar)	10
Temperature °C	-5 ÷ +50
Flow rate at 6 bar with Δp=1 (Nl/min)	1500
Orifice size (mm)	9
Pilot ports size	M5

	WORKING PORTS SIZE
Ⓐ	**1** = G3/8"
	5 = G1/4"
	8 = Quick fitting tube Ø10

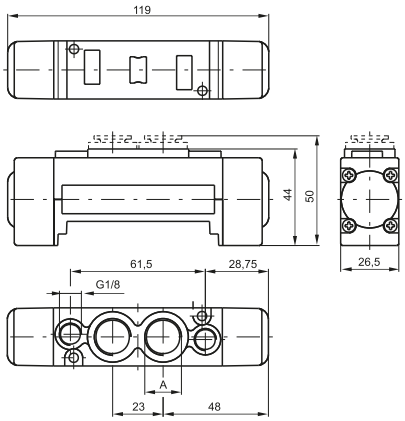

Weight 185 g
Minimum piloting pressure 2 bar

For dimension "A" see ordering code

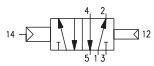

Pneumatic - Differential (External)

Coding: 263Ⓐ.52.00.17

Operational characteristics	
Fluid	Filtered air. No lubrication needed, if applied it shall be continuous
Max working pressure (bar)	10
Temperature °C	-5 ÷ +50
Flow rate at 6 bar with Δp=1 (Nl/min)	1500
Orifice size (mm)	9
Pilot ports size	M5

	WORKING PORTS SIZE
Ⓐ	**1** = G3/8"
	5 = G1/4"
	8 = Quick fitting tube Ø10

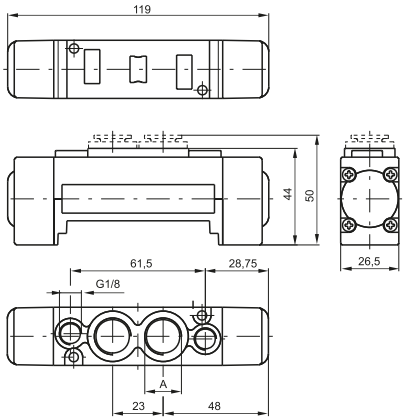

Weight 185 g
Minimum piloting pressure 2 bar

For dimension "A" see ordering code

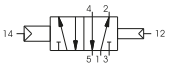

Pneumatic - Pneumatic

Coding: 263Ⓐ.52.00.18

Operational characteristics	
Fluid	Filtered air. No lubrication needed, if applied it shall be continuous
Max working pressure (bar)	10
Temperature °C	-5 ÷ +50
Flow rate at 6 bar with Δp=1 (Nl/min)	1500
Orifice size (mm)	9
Pilot ports size	M5

	WORKING PORTS SIZE
Ⓐ	**1** = G3/8"
	5 = G1/4"
	8 = Quick fitting tube Ø10

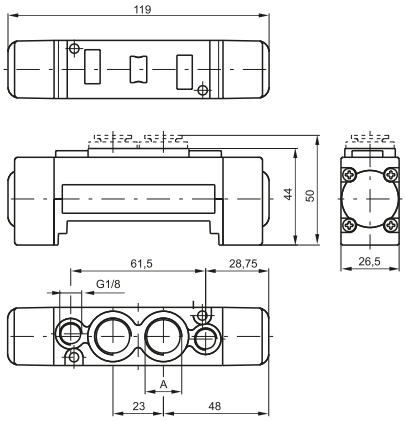

Weight 185 g
Minimum piloting pressure 1,5 bar

For dimension "A" see ordering code

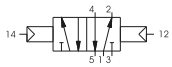

Overall dimensions and technical information are provided solely for informative purposes and may be modified without notice

Solenoid-Spring / Differential

Coding: 263Ⓐ.52.00.Ⓥ.Ⓣ

Operational characteristics	
Fluid	Filtered air. No lubrication needed, if applied it shall be continuous
Max working pressure (bar)	10
Temperature °C	-5 ÷ +50
Flow rate at 6 bar with Δp=1 (Nl/min)	1500
Orifice size (mm)	9

Ⓐ	WORKING PORTS SIZE
	1 = G3/8"
	5 = G1/4"
	8 = Quick fitting tube Ø10
Ⓥ	VERSION
	39 = Solenoid - Spring
	29 = Solenoid external-Spring
	36 = Solenoid-Differerential
	37 = Solenoid-Differential external
	26 = Solenoid external-Differerential
	27 = Solenoid external-Differential external
Ⓣ	VOLTAGE
	01 = 12V DC
	02 = 24V DC
	05 = 24V AC
	06 = 110V AC
	07 = 230 V AC
	08 = 24V DC 1W
	09 = 24V DC downward
	11 = 12V DC downward
	12 = 24V DC downward
	15 = 24V AC downward
	16 = 110V AC downward
	17 = 230 V AC downward
	18 = 24V DC 1W downward
	19 = 24V DC Earth faston downward

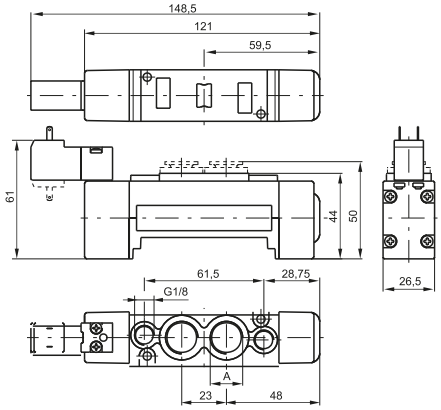

For dimension "A" see ordering code

Weight 220 g
Minimum piloting pressure 2 bar

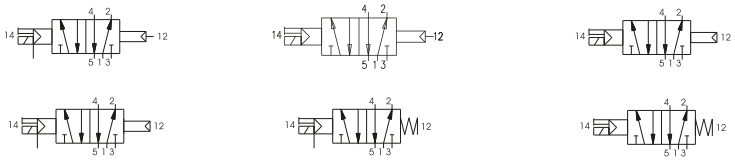

Solenoid - Solenoid

Coding: 263Ⓐ.52.00.Ⓥ.Ⓣ

Operational characteristics	
Fluid	Filtered air. No lubrication needed, if applied it shall be continuous
Max working pressure (bar)	10
Temperature °C	-5 ÷ +50
Flow rate at 6 bar with Δp=1 (Nl/min)	1500
Orifice size (mm)	9

Ⓐ	WORKING PORTS SIZE
	1 = G3/8"
	5 = G1/4"
	8 = Quick fitting tube Ø10
Ⓥ	VERSION
	35 = Solenoid-Solenoid
	24 = Solenoid external-Solenoid external
Ⓣ	VOLTAGE
	01 = 12V DC
	02 = 24V DC
	05 = 24V AC
	06 = 110V AC
	07 = 230 V AC
	08 = 24V DC 1W
	09 = 24V DC downward
	11 = 12V DC downward
	12 = 24V DC downward
	15 = 24V AC downward
	16 = 110V AC downward
	17 = 230 V AC downward
	18 = 24V DC 1W downward
	19 = 24V DC Earth faston downward

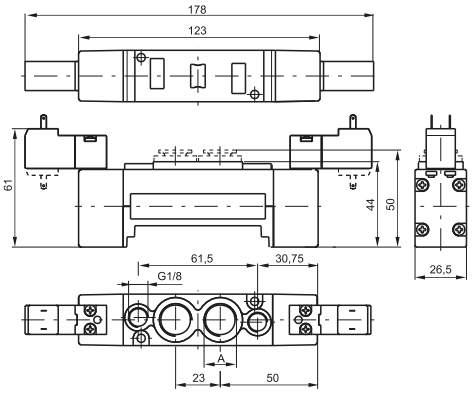

Weight 250 g
Minimum piloting pressure 1,5 bar

For dimension "A" see ordering code

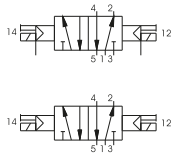

Pneumatic - Pneumatic 5 ways 3 connections

Coding: 263Ⓐ.53.Ⓕ.18

Operational characteristics	
Fluid	Filtered air. No lubrication needed, if applied it shall be continuous
Max working pressure (bar)	10
Temperature °C	-5 ÷ +50
Flow rate at 6 bar with Δp=1 (Nl/min)	1350
Orifice size (mm)	9
Pilot ports size	M5

Ⓐ	WORKING PORTS SIZE
	1 = G3/8"
	5 = G1/4"
	8 = Quick fitting tube Ø10
Ⓕ	FUNCTION
	31 = Closed centres
	32 = Open centres
	33 = Pressured centres

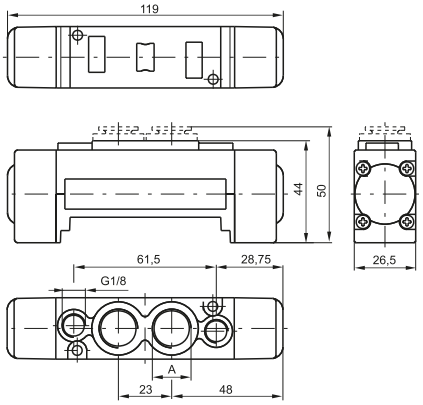

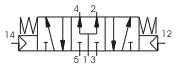

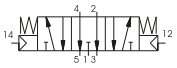

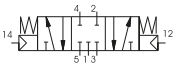

Weight 195 g
Minimum piloting pressure 3 bar

For dimension "A" see ordering code

Solenoid - Solenoid 5 ways 3 connections

Coding: 263Ⓐ.53.Ⓕ.Ⓥ.Ⓣ

Operational characteristics	
Fluid	Filtered air. No lubrication needed, if applied it shall be continuous
Max working pressure (bar)	10
Temperature °C	-5 ÷ +50
Flow rate at 6 bar with Δp=1 (Nl/min)	1350
Orifice size (mm)	9

Ⓐ	WORKING PORTS SIZE
	1 = G3/8"
	5 = G1/4"
	8 = Quick fitting tube Ø10
Ⓕ	FUNCTION
	31 = Closed centres
	32 = Open centres
	33 = Pressured centres
Ⓥ	VERSION
	24 = Solenoid external-Solenoid external
	35 = Solenoid-Solenoid
Ⓣ	VOLTAGE
	01 = 12V DC
	02 = 24V DC
	05 = 24V AC
	06 = 110V AC
	07 = 230 V AC
	08 = 24V DC 1W
	09 = 24V DC downward
	11 = 12V DC downward
	12 = 24V DC downward
	15 = 24V AC downward
	16 = 110V AC downward
	17 = 230 V AC downward
	18 = 24V DC 1W downward
	19 = 24V DC Earth faston downward

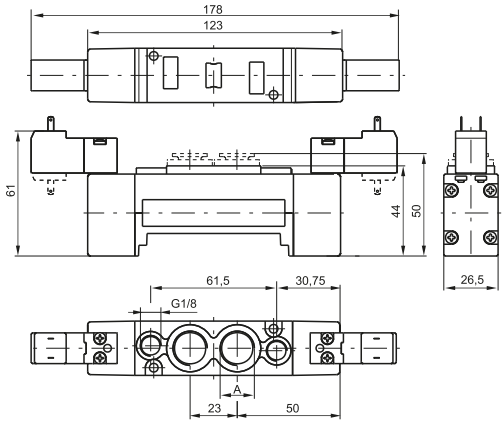

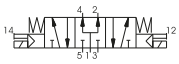

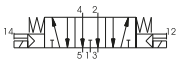

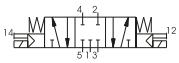

Weight 270 g
Minimum piloting pressure 3 bar

For dimension "A" see ordering code

Overall dimensions and technical information are provided solely for informative purposes and may be modified without notice

Modular base

Coding: 2630.01

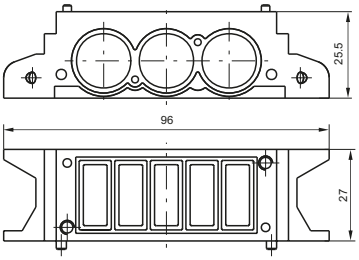

Weight 80 g

Inlet base

Coding: 2630.Ⓥ

Ⓥ	VERSION
	02 = Right
	03 = Left

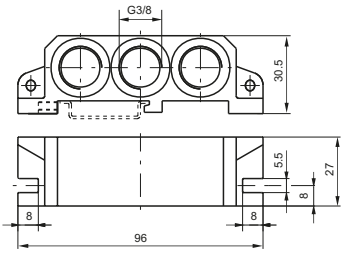

Weight 80 g

2630.02

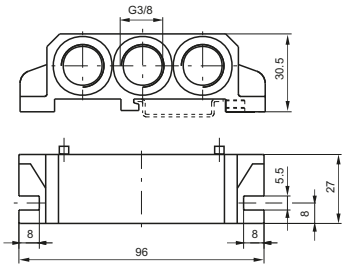

Weight 100 g

2630.03

Intermediate air intake

Coding: 2630.10

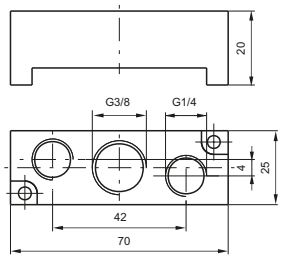

Weight 60 g
to be assembled instead of a valve

Closing plate

Coding: 2630.00

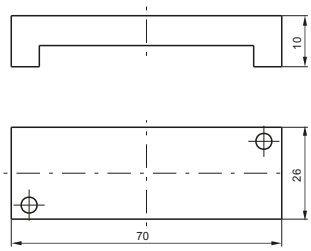

Weight 20 g

Diaphragm plug

Coding: 2630.17

Weight 5 g

Pneumatic - Spring

Coding: 2645.52.00.19

Operational characteristics	
Fluid	Filtered air. No lubrication needed, if applied it shall be continuous
Max working pressure (bar)	10
Temperature °C	-5 ÷ +50
Flow rate at 6 bar with Δp=1 (Nl/min)	1100
Orifice size (mm)	7.5

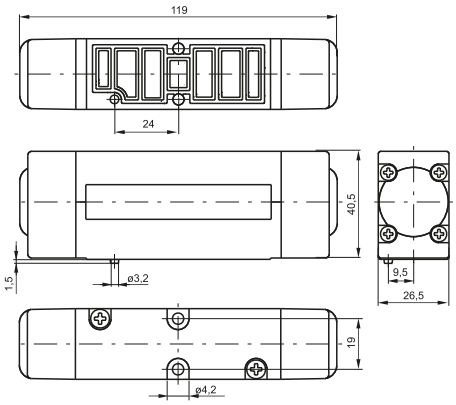

Weight 235 g
Minimum piloting pressure 2 bar

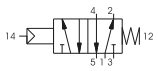

Pneumatic - Differential

Coding: 2645.52.00.16

Operational characteristics	
Fluid	Filtered air. No lubrication needed, if applied it shall be continuous
Max working pressure (bar)	10
Temperature °C	-5 ÷ +50
Flow rate at 6 bar with Δp=1 (Nl/min)	1100
Orifice size (mm)	7.5

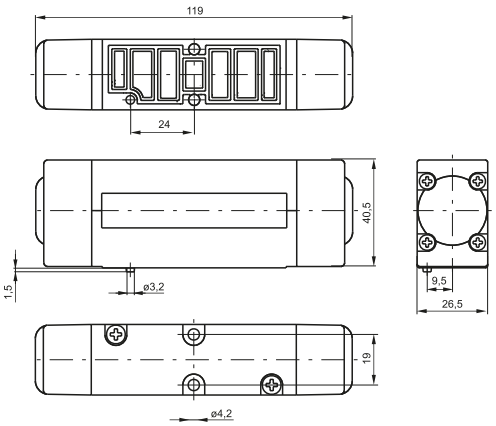

Weight 235 g
Minimum piloting pressure 2 bar

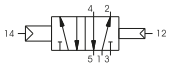

Pneumatic - Differential (External)

Coding: 2645.52.00.17

Operational characteristics	
Fluid	Filtered air. No lubrication needed, if applied it shall be continuous
Max working pressure (bar)	10
Temperature °C	-5 ÷ +50
Flow rate at 6 bar with Δp=1 (Nl/min)	1100
Orifice size (mm)	7.5

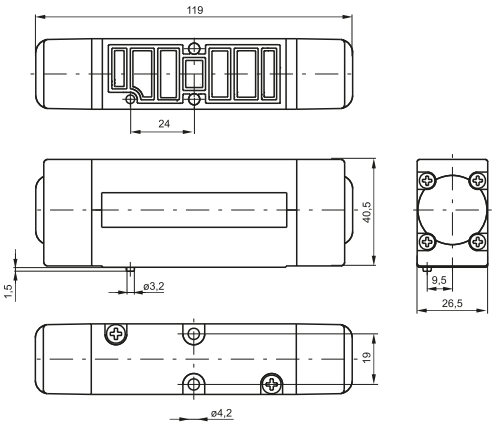

Weight 235 g
Minimum piloting pressure 2 bar

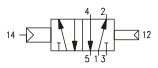

Overall dimensions and technical information are provided solely for informative purposes and may be modified without notice

Pneumatic - Pneumatic

Coding: 2645.52.00.18

Operational characteristics	
Fluid	Filtered air. No lubrication needed, if applied it shall be continuous
Max working pressure (bar)	10
Temperature °C	-5 ÷ +50
Flow rate at 6 bar with Δp=1 (Nl/min)	1100
Orifice size (mm)	7.5

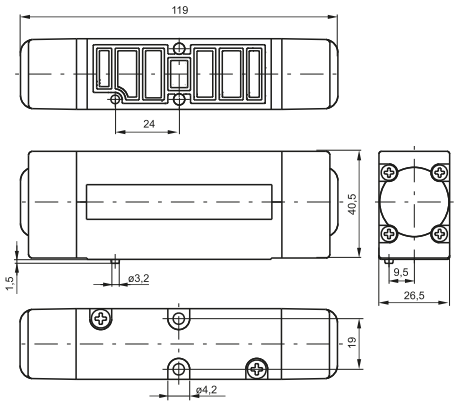

Weight 255 g
Minimum piloting pressure 1,5 bar

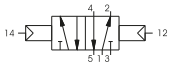

Solenoid-Spring / Differential

Coding: 264Ⓒ.52.00.Ⓥ.Ⓣ

Operational characteristics	
Fluid	Filtered air. No lubrication needed, if applied it shall be continuous
Max working pressure (bar)	10
Temperature °C	-5 ÷ +50
Flow rate at 6 bar with Δp=1 (Nl/min)	1100
Orifice size (mm)	7.5

Ⓒ	TYPE ELECTROPILOT EXHAUST
	1 = on base (only for self feeding valves)
	5 = on pilot (for all version)
Ⓥ	VERSION
	39 = Solenoid - Spring
	29 = Solenoid external-Spring
	36 = Solenoid-Differerential
	37 = Solenoid-Differential external
	26 = Solenoid external-Differerential
	27 = Solenoid external-Differential external
Ⓣ	VOLTAGE
	01 = 12V DC
	02 = 24V DC
	05 = 24V AC
	06 = 110V AC
	07 = 230 V AC
	08 = 24V DC 1W
	09 = 24V DC downward
	11 = 12V DC downward
	12 = 24V DC downward
	15 = 24V AC downward
	16 = 110V AC downward
	17 = 230 V AC downward
	18 = 24V DC 1W downward
	19 = 24V DC Earth faston downward

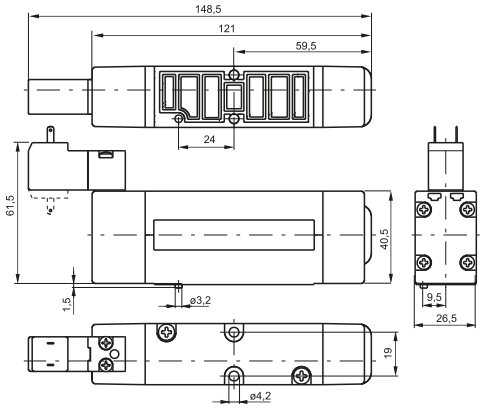

Weight 270 g
Minimum piloting pressure 2 bar

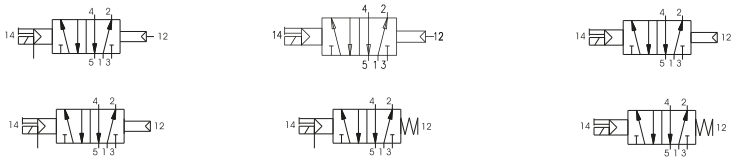

Solenoid - Solenoid

Coding: 264Ⓒ.52.00.Ⓥ.Ⓣ

Operational characteristics	
Fluid	Filtered air. No lubrication needed, if applied it shall be continuous
Max working pressure (bar)	10
Temperature °C	-5 ÷ +50
Flow rate at 6 bar with Δp=1 (Nl/min)	1100
Orifice size (mm)	7.5

Ⓒ	TYPE ELECTROPILOT EXHAUST
	1 = on base (only for self feeding valves)
	5 = on pilot (for all version)
Ⓥ	VERSION
	24 = Solenoid external-Solenoid external
	35 = Solenoid-Solenoid
Ⓣ	VOLTAGE
	01 = 12V DC
	02 = 24V DC
	05 = 24V AC
	06 = 110V AC
	07 = 230 V AC
	08 = 24V DC 1W
	09 = 24V DC downward
	11 = 12V DC downward
	12 = 24V DC downward
	15 = 24V AC downward
	16 = 110V AC downward
	17 = 230 V AC downward
	18 = 24V DC 1W downward
	19 = 24V DC Earth faston downward

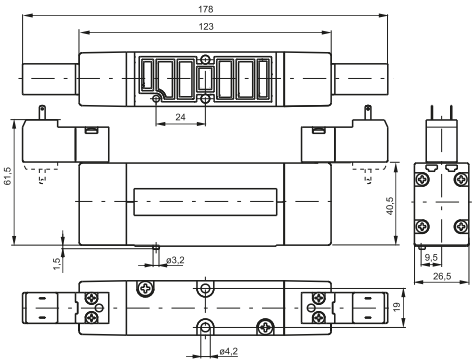

Weight 305 g
Minimum piloting pressure 1,5 bar

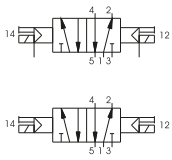

Overall dimensions and technical information are provided solely for informative purposes and may be modified without notice

Pneumatic - Pneumatic 5 ways 3 connections

Coding: 264Ⓒ.53.Ⓕ.18

Operational characteristics	
Fluid	Filtered air. No lubrication needed, if applied it shall be continuous
Max working pressure (bar)	10
Temperature °C	-5 ÷ +50
Flow rate at 6 bar with Δp=1 (Nl/min)	1000
Orifice size (mm)	7.5

Ⓒ	TYPE ELECTROPILOT EXHAUST
	1 = on base (only for self feeding valves)
	5 = on pilot (for all version)
Ⓕ	FUNCTION
	31 = Closed centres
	32 = Open centres
	33 = Pressured centres

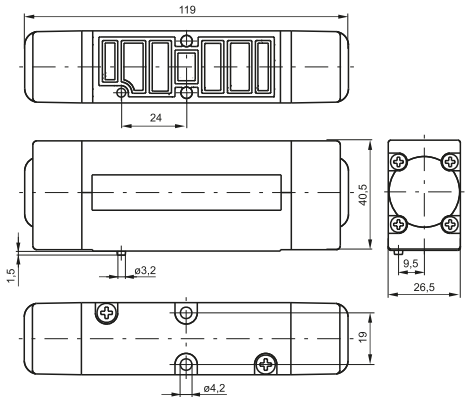

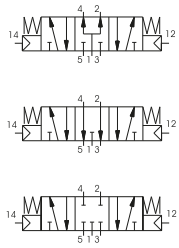

Weight 245 g
Minimum piloting pressure 3 bar

Solenoid - Solenoid 5 ways 3 connections

Coding: 264Ⓒ.53.Ⓕ.Ⓥ.Ⓣ

Operational characteristics	
Fluid	Filtered air. No lubrication needed, if applied it shall be continuous
Max working pressure (bar)	10
Temperature °C	-5 ÷ +50
Flow rate at 6 bar with Δp=1 (Nl/min)	1000
Orifice size (mm)	5

Ⓒ	TYPE ELECTROPILOT EXHAUST
	1 = on base (only for self feeding valves)
	5 = on pilot (for all version)
Ⓕ	FUNCTION
	31 = Closed centres
	32 = Open centres
	33 = Pressured centres
Ⓥ	VERSION
	24 = Solenoid external-Solenoid external
	35 = Solenoid-Solenoid
Ⓣ	VOLTAGE
	01 = 12V DC
	02 = 24V DC
	05 = 24V AC
	06 = 110V AC
	07 = 230 V AC
	08 = 24V DC 1W
	09 = 24V DC downward
	11 = 12V DC downward
	12 = 24V DC downward
	15 = 24V AC downward
	16 = 110V AC downward
	17 = 230 V AC downward
	18 = 24V DC 1W downward
	19 = 24V DC Earth faston downward

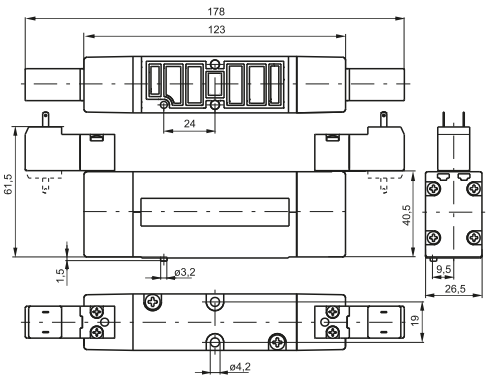

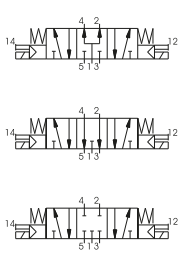

Weight 315 g
Minimum piloting pressure 3 bar

Modular base

Coding: 2640.Ⓥ

Ⓥ	VERSION
	01 = Standard base
	11 = Base for single separate inlet

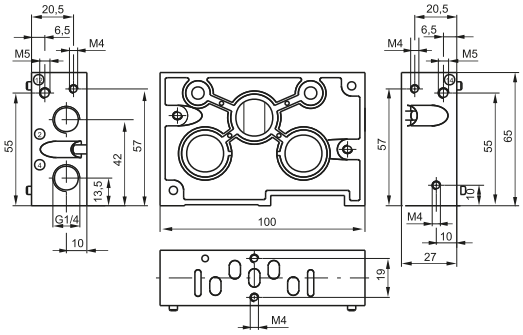

Weight 220 g

Inlet base

Coding: 2640.Ⓥ

Ⓥ	VERSION
	02 = Right
	03 = Left

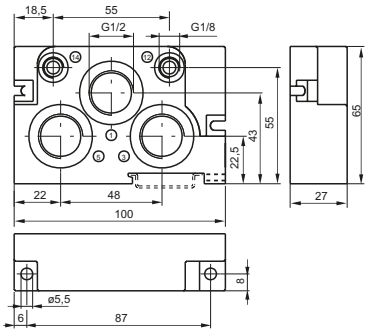

Weight 200 g

2640.02

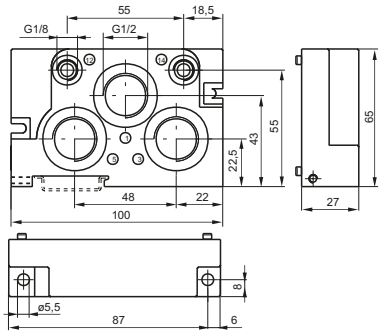

Weight 200 g

2640.03

Intermediate air intake

Coding: 2640.10

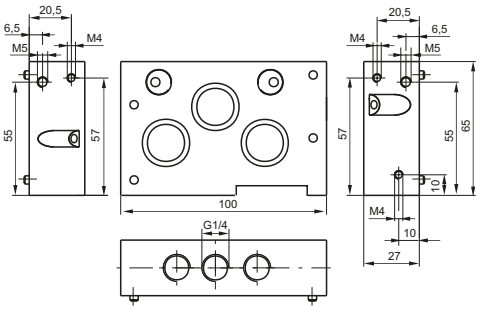

Closing plate

Coding: 2640.00

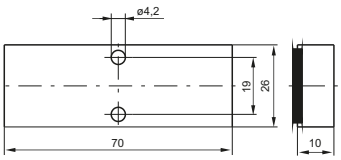

Weight 50 g

Overall dimensions and technical information are provided solely for informative purposes and may be modified without notice

Diaphragm plug

Coding: 2640.17

Weight 10 g

Series 300

General

The direct operated solenoid valve is the interface between pneumatic and electronic. In fact, it is actuated by an electrical signal and in turn gives a pneumatic signal directly available for small users or for actuating bigger pneumatic distributors.

A wide range of valves are needed for satisfying various applications. For this need we have available miniature components with very low volume and electrical impute as well as solenoid valves with large flow rate and power for heavy duty operations. These solenoid valves are usually 3/2, normally closed or normally open, but there are available the 2/2, closed or open, for vacuum and others.

Note that the direct operated valves can only be used with bases, individual or multiple with M5 or G 1/8" thread or with connections.

Some PNEUMAX solenoid valves are C US homologated valid for USA and Canada (file n. VAIU2.E206325, VAIU8.E206325). For more details, refer to the coding, in the following pages.

The 10mm and 15mm solenoid valves are certified by UL in compliance with both Canadian and USA safety requirements as recognized component and included in the **UL file E206325** and bear the “UL Recognized Component” marking.

The 10mm and 15mm solenoid valves, since they are devices for “class 2 circuits”, according with UL standard UL 429/CSA C22.2 N°139, are not considered dangerous for electric shock or fire and thus a
UL certification is not required for cables and connectors.

Some solenoid valves, since they are devices for “class 2 circuits”, according with UL standard UL 429/CSA C22.2 N°139, are not considered dangerous for electric shock or fire and thus a **UL certification is not required for cables and connectors.**

Use and maintenance

Maintenance is normally not required for these components therefore the spare parts list is not provided.

Their construction complexity and low cost do not make repair economically viable. It's easier and more economic to replace the complete valve in case of malfunction.
For proper lubrication use only hydraulic oil class H such as Castrol type MAGNA GC 32.

Overall dimensions and technical information are provided solely for informative purposes and may be modified without notice

General

This series of directly operated vales is characterized by its reduced dimensions. They are designed to be mounted individually or on manifold. The high operating speed and high flow rate in consideration of the reduced dimensions, in combination with the high compatibility of the material used to manufacture them ensure a high variety of possible application fields.
All valves have manual override as standard and are available in 3/2 configuration N.O. and N.C. as well as 2/2 N.C. both 12 or 24 V DC or AC. Electrical connection can be via co moulded cables or via connector, in this configuration a LED indicates the coil status. Ensure that the fixing screws are tightened with 0.15Nm maximum.
The 10mm Speed-up version are built in accordance to the ISO 15218-2003 standard with a flow rate of 24Nl/min. The coil integrates a dedicated circuit board which enables to contain the power consumption to 0.35W in case of the high flow rate version and to 0.1W in case of the standard flow rate version.

Functional schematics for standard version

1 = SUPPLY PORT
2 = OUTLET PORT
3 = EXHAUST PORT

Normally Closed (N.C.) 3/2

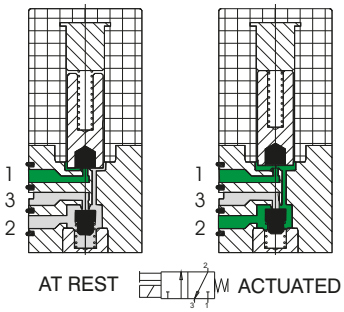

Normaly Open (N.O.) 3/2

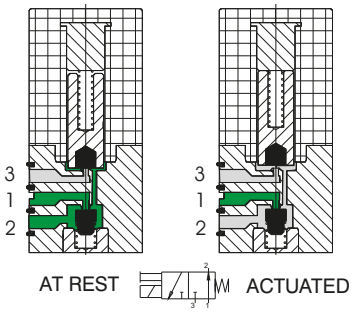

Normally Closed (N.C.) 2/2

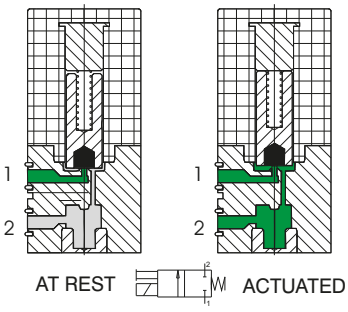

Functional schematics for Speed-up version

1 = SUPPLY PORT
2 = OUTLET PORT
3 = EXHAUST PORT

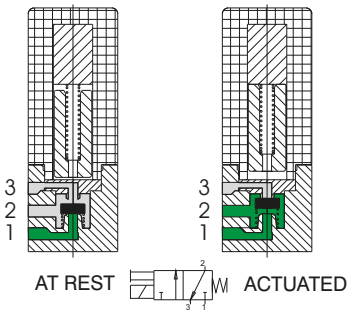

Normally Closed
(N.C.) 3/2

Construction characteristics:

Electrical part:
Miniature solenoid consisting of a coil made of copper wire of different diameters depending on voltage,isolated according to "F" class standard, with injection-moulded nylon-glass application. All parts forming the cladding, the electrical connections and the pole pieces are protected against corrosion.

Mechanical part:
Stainless steel 430F armatures FPM poppets body in thermoplastic material and manual override and plug in nickel plated brass. Valves must be mounted on single or multiple manifold to be used.

Technical characteristics

		Standard Version	Speed-Up Version
Pneumatic:	Working pressure	0 - 7 bar	
	Nominal diameter	0,7 mm	1,1 mm
	Temperature	-5° - +50°C	
	Maximun flow rate at 6 bar with Δp 1 bar	14 Nl/min	24 Nl/min
	Exhaust flow	22 Nl/min	29 Nl/min
	Max number of cycles per minute	2.700	
	Life	50 million	
Electric:	Voltages	12 - 24 Volt D.C.	
	Power	1,3 Watt	0,35 Watt (1)
	Voltage tollerance	-5% - +10%	
	Response time when energized *	8 ms	
	Response time when de-energized *	10 ms	
	Copper wire isolation class	F (155°C)	
	Protection degree	IP65 (with cables) IP40 (with connectors) IP00 (with Faston)	

(*) "Shifting time of pneumatic directional control valves or moving parts, logic devices were measured in accordance to ISO 12238:2001, Pneumatic fluid power - Directional control valves - Measurement of shifting time"

(1) = consumption wrapping in opening phase 3, 5W (10 ms), consumption wrapping in maintenance phase 0.35 W.

Overall dimensions and technical information are provided solely for informative purposes and may be modified without notice

10 mm Standard miniature solenoid ordering codes

N3 _ _ . _

- **6** = 2/2 N.C.
- **7** = 3/2 N.C.
- **8** = 3/2 N.O.

- **1** = 24 V D.C.
- **2** = 12 V D.C.
- **4** = 6 V D.C.*

- **1** = 90° Connector with Led
- **2** = Cable 300 mm. - IP65 (embedded cable)*
- **3** = Line Connector with Led
- **4** = 90° Connector without Led
- **5** = Line Connector without Led

* = The c UL us Directive does not apply to these versions

Miniature solenoid valve with cable

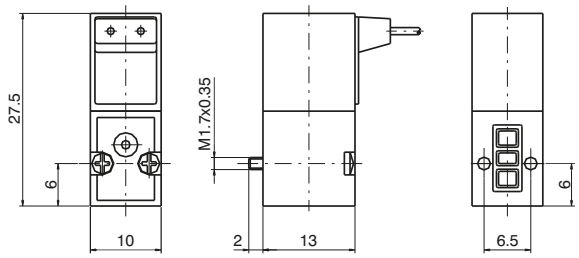

Weight 12 gr.

Miniature solenoid valve with 90° connector

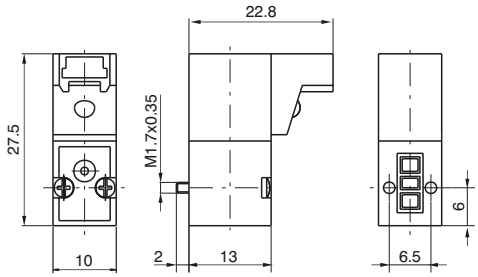

Weight 12 gr.

Miniature solenoid valve with line connector

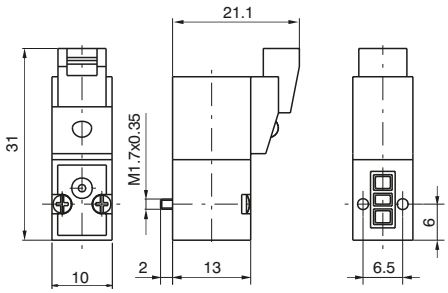

Weight 12 gr.

Connector

Ordering codes

371 . _

- **300 :** Cable L = 300 mm
- **600 :** Cable L = 600 mm
- **1000 :** Cable L = 1000 mm

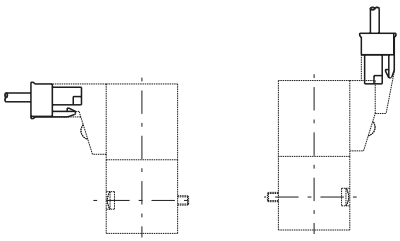

Weight 3 gr.

Closing plate

Ordering codes
395.00

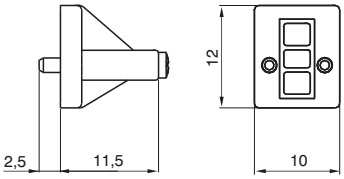

Weight 5 gr.

Interfaces dimensions

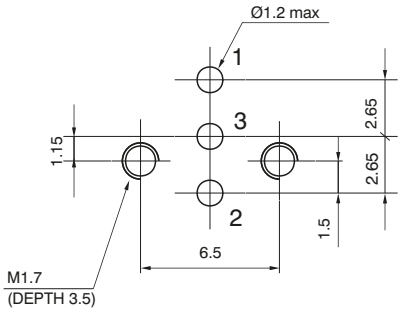

10 mm - ISO 15218-2003 miniature solenoid ordering codes

The versions are not contemplated by the c UL us Directive

P3 __ __ . __

- **6** = 2/2 N.C.
- **7** = 3/2 N.C.

- **1** = 24 V D.C.
- **2** = 12 V D.C.
- **4** = 6 V D.C.

- **1** = 90° Connector with Led
- **2** = Cable 300 mm. - IP65 (embedded cable)
- **3** = Line Connector with Led
- **4** = 90° Connector without Led
- **5** = Line Connector without Led

Miniature solenoid valve with cable

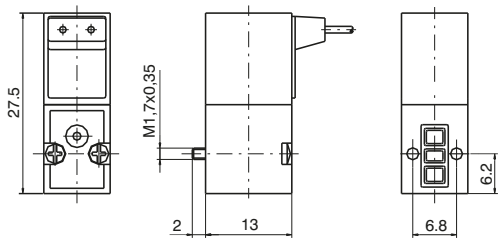

Weight 12 gr.

Miniature solenoid valve with 90° connector

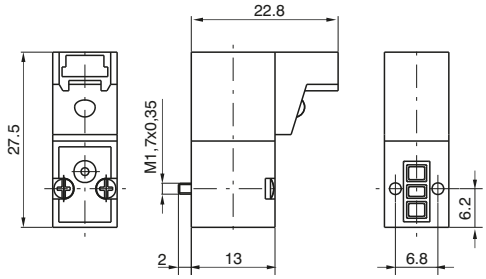

Weight 12 gr.

Miniature solenoid valve with line connector

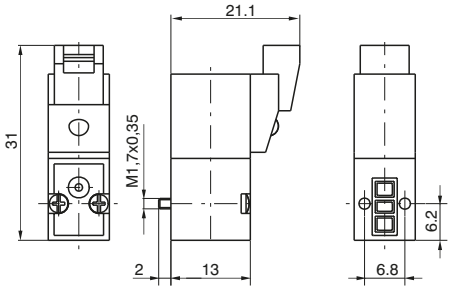

Weight 12 gr.

Connector

Ordering codes

371 . __

- **300 :** Cable L = 300 mm
- **600 :** Cable L = 600 mm
- **1000 :** Cable L = 1000 mm

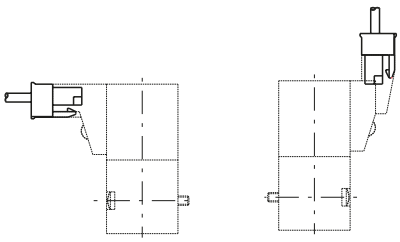

Weight 3 gr.

Interfaces dimensions 10 mm - ISO 15218

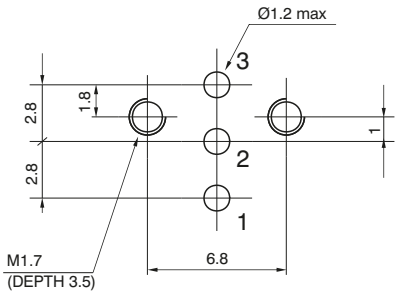

Overall dimensions and technical information are provided solely for informative purposes and may be modified without notice

Standard version Individual base

Ordering code
395.01

Weight 10 gr.

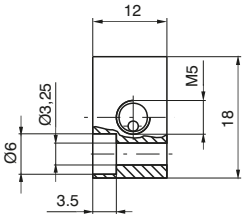

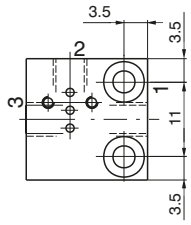

Standard version multiple bases

Ordering code
395 . __

N° Places

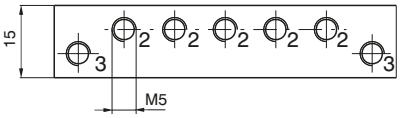

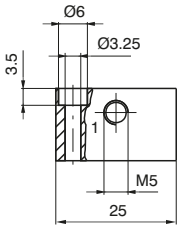

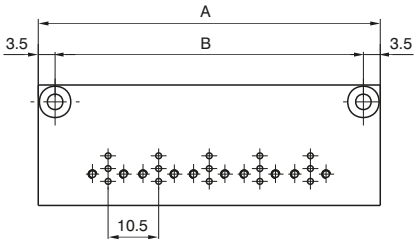

N° Places	02	03	04	05	06	07	08	09	10
A	39.5	50	60.5	71	81.5	92	102.5	113	123.5
B	32.5	43	53.5	64	74.5	85	95.5	106	116.5
Weight (gr.)	43	54	65	76	87	98	109	120	131

Individual base for ISO 15218-2003 version

Ordering code
P395.01

Weight 10 gr.

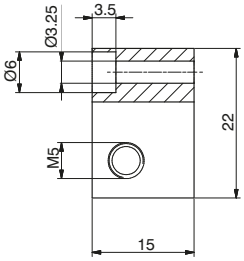

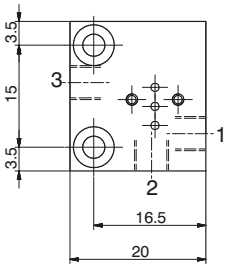

Multiple base for ISO 15218-2003 version

Ordering code
P395 . __

N° Places

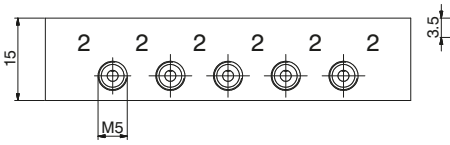

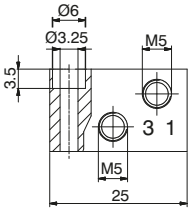

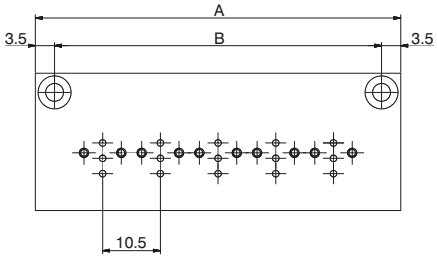

N° Places	02	03	04	05	06	07	08	09	10
A	35	45.5	56	66.5	77	87.5	98	108.5	119
B	28	38.5	49	59.5	70	80.5	91	101.5	112
Weight (gr.)	43	54	65	76	87	98	109	120	131

Overall dimensions and technical information are provided solely for informative purposes and may be modified without notice

General

This direct operated solenoid valve has minimum overall dimensions (15 mm wide). Its construction method is same as 10 mm valve, of course.
It is suitable to be single or gang mounted or as electro-operator for larger air flow distributors.
Can be utilized with compressed air and other fluids compatible with material used to build the solenoid valve.
The available versions, all equipped with manual overide, are 3 ways, normally closed and normally open with DC and AC 50/60 Hz.
It's possible to install the N.O. valve on N.C. interface by using the registered reverse system included in the valve body.
The electrical connection is made with cables (300 mm.), FASTON or with connector.
This type of miniature solenoid valve is interchangeable with most of the same products available on the market.
Coil be can also positioned at 180° to get the electrical connection located on the opposite side than override.
Make sure that the fastening screews are tightened with maximum torque of 0,75 Nm.

Functional schematics

1 = SUPPLY PORT
2 = OUTLET PORT
3 = EXHAUST PORT

Normally Closed (N.C.) 3/2

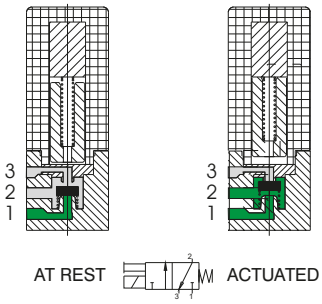

Normaly Open (N.O.) 3/2

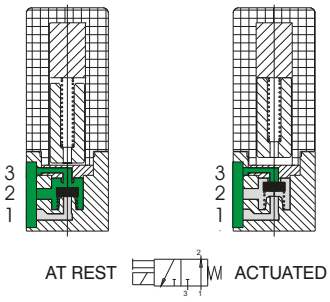

Construction characteristics

Electrical part
Miniature solenoid consisting of a coil made of copper wire of different diameters depending on voltage,isolated according to "F" class standard, with injection-moulded nylon-glass application. All parts forming the cladding, the electrical connections and the pole pieces are protected against corrosion.
Mechanical part
AISI 430F cores, AISI 302 return springs, FPM poppets, thermoplastic polyester body.

Technical characteristics

Pneumatics

Nominal diameter	0.8	1,1 mm	1,5 mm (only D.C.)
Maximun flow rate at 6 bar with Δp 1 bar	20 Nl/min	30 Nl/min	50 Nl/min
Working pressure for N.C.	0 - 10 bar		0 - 7 bar
Working pressure for N.O.	/	0 - 8 bar	0 - 5 bar
Temperature	-5° +50°C		
Life expectancy	50 million cycles (with standard working conditions)		

Electrical

Voltage D.C.	24 V DC	12-24 V DC	
Voltage A.C.	/	24-110-230 Volt 50/60 Hz	/
Power consumption D.C.	1 Watt	2,3 Watt	
Power consumption A.C.	/	2,8 VA (at starting) 2,5 VA (at speed)	/
Voltage tollerance	-5% - +10%		
Response time *	10-12 ms		
Isolating class	F (155°C)		
Protection degree	IP65 (with cables) IP40 (with connectors) IP00 (with faston)		

(*) "Shifting time of pneumatic directional control valves or moving parts, logic devices were measured in accordance to ISO 12238:2001, Pneumatic fluid power - Directional control valves - Measurement of shifting time"

Overall dimensions and technical information are provided solely for informative purposes and may be modified without notice

15 mm miniature solenoid ordering codes

N3 _ _ . _ _ _ _

- **3** = 3/2 N.C.
- **4** = 3/2 N.O. (only Ø1,1 and Ø1,5)
- **1** = 24 V DC
- **2** = 12 V DC
- **5** = 24 V 50-60 Hz
- **6** = 110 V 50-60 Hz
- **7** = 230 V 50-60 Hz
- **8** = 24V D.C. 1 W** (only Ø0,8)
- **9** = Faston ground
- = Straight (no addittional letter required)
- **R** = Downward
- **A** = Ø1,1
- **B** = Ø1,5
- **E** = Ø0,8
- **0** = Faston
- **1** = Faston EN17301-803 (Ex DIN 43650)
- **2** = Cables* (300 mm)**
- = PUSH (Standard Version)
- **2** = Without Manual override
- **8** = Manual override 2 positions

** = The c UL us Directive does not apply to these versions

See previous page for available versions

* = On request and for large quantity only *(only 24 V D.C., 2.3 W)*

With Faston

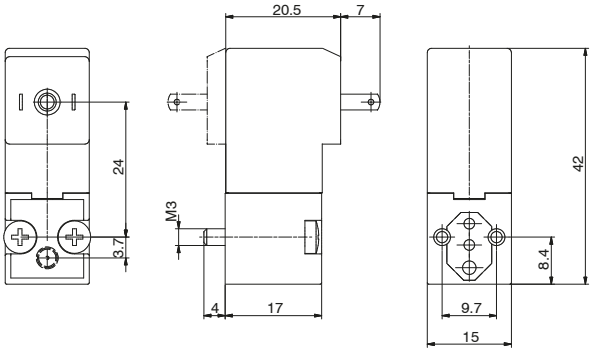

Weight 36 gr.

With Faston EN17301-803 (Ex DIN 43650

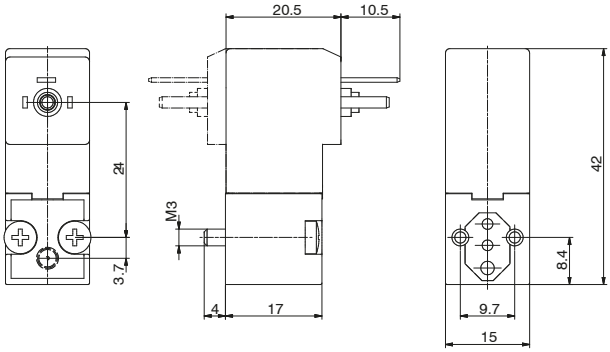

Weight 36 gr.

With Cables (300 mm)

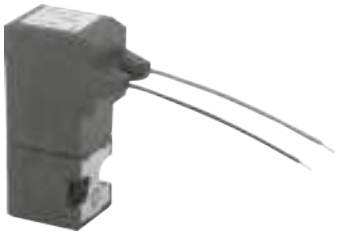

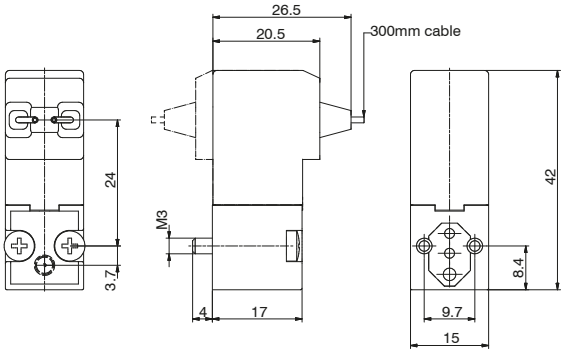

Weight 38 gr.

With Faston ground

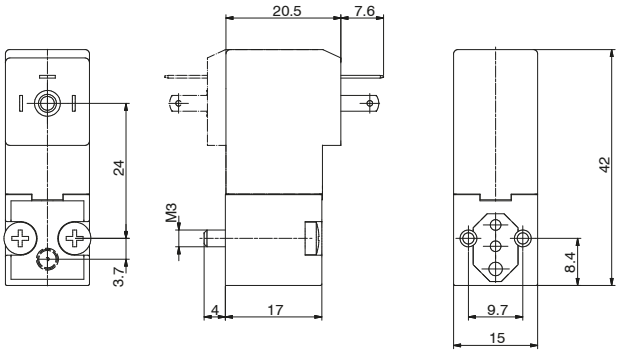

Weight 38 gr.

Connector

Ordering code	
315.11.00	Standard
315.12.00	for faston EN17301-803 (Ex DIN 43650)
315.11.0_L	Led 1 = 24 V D.C. / A.C. 2 = 110 V 50/60 Hz 3 = 230 V 50/60 Hz
315.12.0_L	for faston EN17301-803 (Ex DIN 43650) with Led 1 = 24 V D.C. / A.C. 2 = 110 V 50/60 Hz 3 = 230 V 50/60 Hz

Weight 13 gr.

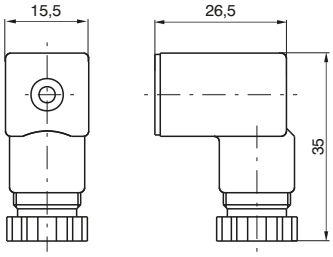

Single use base

Ordering code
355.01

Weight 18 gr.

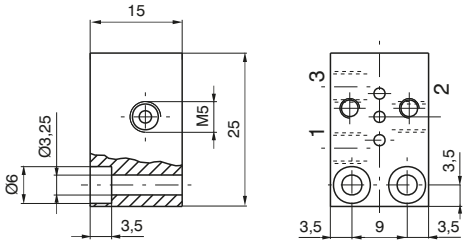

Multiple bases

Ordering code	
A = Orifice M5	A = Pipe fitting Ø4
355 . _	**354 .** _
N° PLACES	N° PLACES

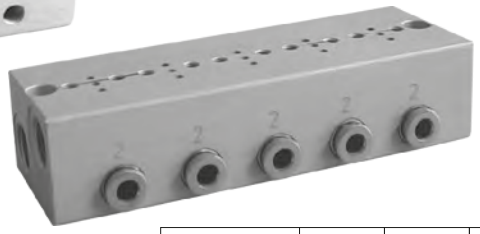

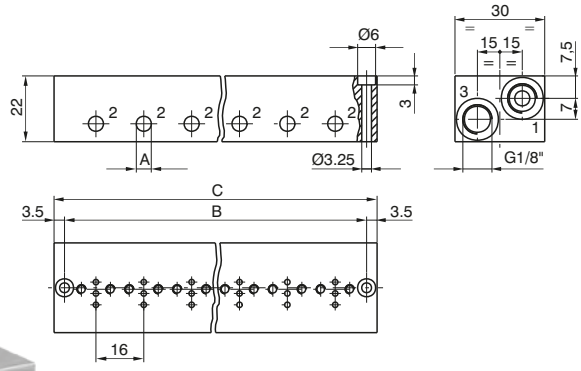

N° places	02	03	04	05	06	07	08	09	10
B	37	53	69	85	101	117	133	149	165
C	44	60	76	92	108	124	140	156	172
Weight (gr.)	66	92	116	141	165	190	216	242	266

Closing plate

Ordering code
355.00

Weight 6 gr.

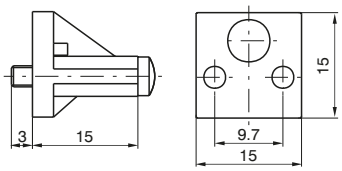

Interface dimensions

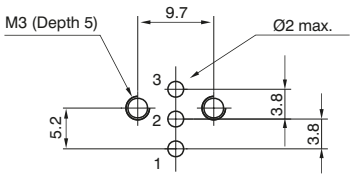

Overall dimensions and technical information are provided solely for informative purposes and may be modified without notice

15mm Solenoid valves Manifold with electric multipoint connection

General

Also for this 15mm solenoid valves series we have realized the possibility of the assembling on the base with multipoint connection, this for making faster the connection and the harness of them.
Realized from a shaped outline, it results compact because it uses a relevant multipoint connection available only with a 37 poles connector from 10 to 32 solenoid valves (with steps of 2), available in line or at 90° and IP40 protection. On the base it is possible to put some threaded cartridges with push-in fittings for Ø3 – Ø3,17 Ø4 tube or M5 threaded.
The application field of these new configurations is the standard of 3/2 valves, where it is needed to realize groups or Manifolds provided with integrated electric connection to make easier and faster the connection and the harness of them (control of single acting cylinders with small dimensions, pilot system of valves with bigger dimensions etc..).

Constructive characteristics:

Constructive principle:
From 10 up to 32 solenoid valves (with steps of 2)
Extremely compact solution
IP40 protection (without visualisation led)
Possibility of having different working connections (Ø3, Ø3,17, Ø4 tubes, M5)
The new coding key requires the use of the same type of solenoid valves (there aren't codes for groups with a mixed configuration).

Overall dimensions

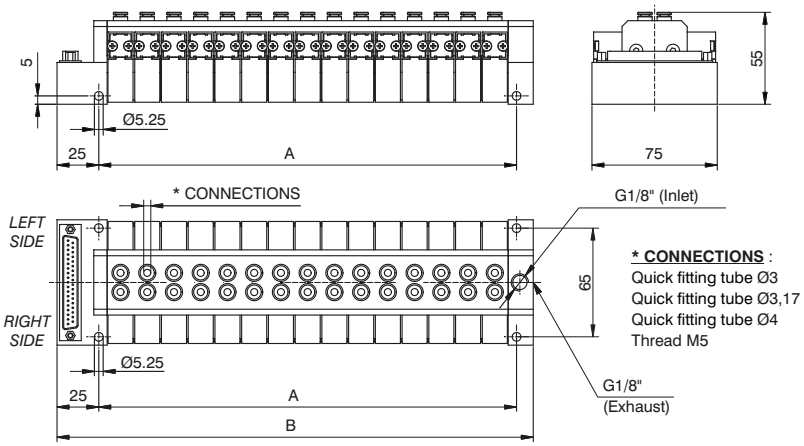

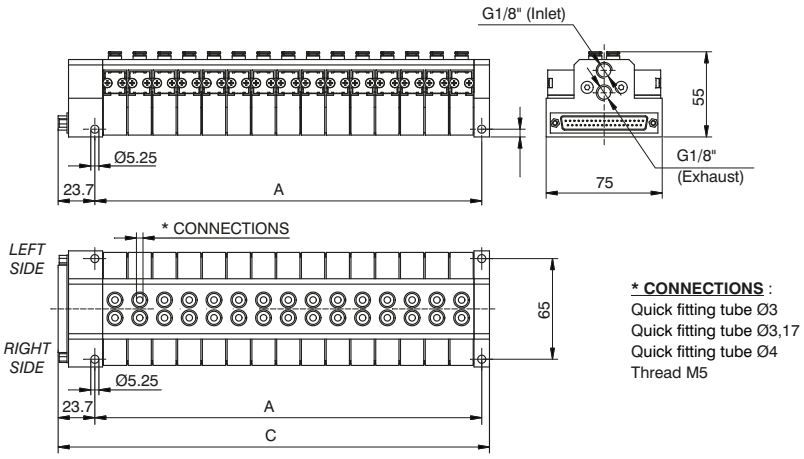

N° places	A	B	C
10	90	125	118,7
12	106	141	134,7
14	122	157	150,7
16	138	173	166,7
18	154	189	182,7
20	170	205	198,7
22	186	221	214,7
24	202	237	230,7
26	218	253	246,7
28	234	269	262,7
30	250	285	278,7
32	266	301	294.7

SUB-D 37 POLES CONNECTORS

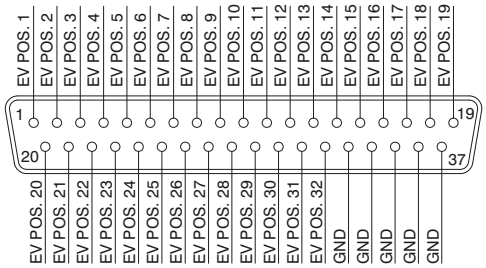

Overall dimensions
Manifold with CANopen® node

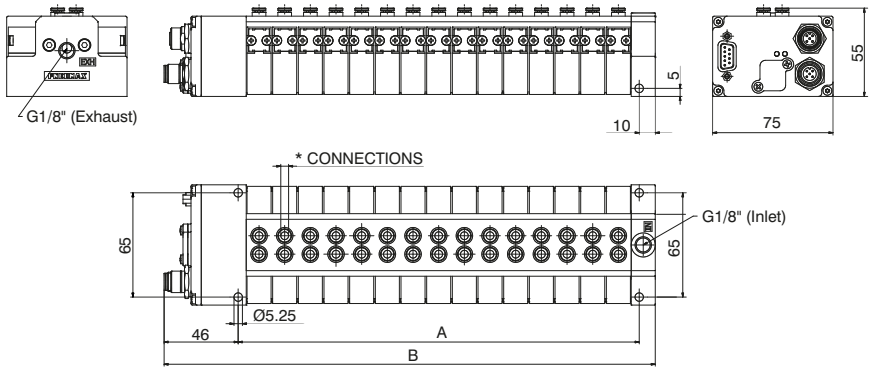

N° positions	A	B
10	90	146
12	106	162
14	122	178
16	138	194
18	154	210
20	170	226
22	186	242
24	202	258
26	218	274
28	234	290
30	250	306
32	266	322

Manifold layout configuration

Connector type
0 = in line connector
9 = 90° connector
C = with CANopen® node

Connections size and type
3 = quick fitting tube Ø3
C = quick fitting tube Ø3.17
4 = quick fitting tube Ø4
A = M5 thread

35M . NW . _ _ . 0 _ . _ _ _

N° positions
A = 10 positions
B = 12 positions
C = 14 positions
D = 16 positions
E = 18 positions
F = 20 positions
G = 22 positions
H = 24 positions
L = 26 positions
M = 28 positions
N = 30 positions
P = 32 positions

N° positions plugged side left
0 = 00 positions
1 = 01 positions
2 = 02 positions
3 = 03 positions
4 = 04 positions
5 = 05 positions
6 = 06 positions
7 = 07 positions
8 = 08 positions
9 = 09 positions
A = 10 positions
B = 11 positions
C = 12 positions
D = 13 positions
E = 14 positions
F = 15 positions
G = 16 positions

N° positions plugged side right
0 = 00 positions
1 = 01 positions
2 = 02 positions
3 = 03 positions
4 = 04 positions
5 = 05 positions
6 = 06 positions
7 = 07 positions
8 = 08 positions
9 = 09 positions
A = 10 positions
B = 11 positions
C = 12 positions
D = 13 positions
E = 14 positions
F = 15 positions
G = 16 positions

Valve type
A = N331.R0A (EV. 3/2 NC 24VDC d.1,1)
B = N331.R0B (EV. 3/2 NC 24VDC d.1,5)
C = N338.R0E (EV. 3/2 NC 24VDC 1W d.0,8)
D = N341.R0A (EV. 3/2 NO 24VDC d.1,1)
E = N341.R0B (EV. 3/2 NO 24VDC d.1,5)
F = N335.R0A (EV. 3/2 NC 24VAC d.1,1)

NOTE:
The "R" letter indicates that the coil is mounted upside-down (faces down). For prices and technical features of these valves please refer to the correspondent standard version (not R) included in the price list and catalogue.

Overall dimensions and technical information are provided solely for informative purposes and may be modified without notice

Overall dimensions
Manifold with Optyma-F serial system (slave + input modules)

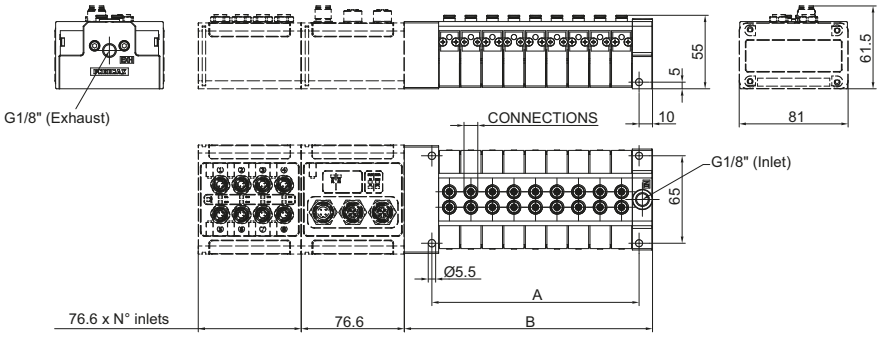

N° positions	A	B
10	90	120,50
12	106	136,50
14	122	152,50
16	138	168,50
18	154	184,50
20	170	200,50
22	186	216,50
24	202	232,50
26	218	248,50
28	234	264,50
30	250	280,50
32	266	296,50

Manifold layout configuration with Optyma-F serial system (slave + input modules)

32 OUT VERSION
C3=CANopen® 32OUT
D3=DeviceNet 32OUT
P3=PROFIBUS 32OUT
A3=EtherCAT® 32OUT (Serie 5700)
I3=EtherNet / IP 32OUT
N3=PROFINET IO RT 32OUT
L3= Powerlink 32OUT

INPUT MODULES
A = No module
D1= 8 M8 digital inputs modules
D3= 16IN digital inputs (SUB-D 25P) module
T1= 2 analogue inputs 0-5V module
T2= 2 analogue inputs 0-10V module
C1= 2 analogue inputs 0-20mA module
C2= 2 analogue inputs 4-20mA module

Connections size and type
3 = quick fitting tube Ø3
C = quick fitting tube Ø3.17
4 = quick fitting tube Ø4
A = M5 thread

35S . _ _ . _ _ . 0 _ . _ _

N° positions
A = 10 positions
B = 12 positions
C = 14 positions
D = 16 positions
E = 18 positions
F = 20 positions
G = 22 positions
H = 24 positions
L = 26 positions
M = 28 positions
N = 30 positions
P = 32 positions

N° positions plugged side left
0 = 00 positions
1 = 01 positions
2 = 02 positions
3 = 03 positions
4 = 04 positions
5 = 05 positions
6 = 06 positions
7 = 07 positions
8 = 08 positions
9 = 09 positions
A = 10 positions
B = 11 positions
C = 12 positions
D = 13 positions
E = 14 positions
F = 15 positions
G = 16 positions

N° positions plugged side right
0 = 00 positions
1 = 01 positions
2 = 02 positions
3 = 03 positions
4 = 04 positions
5 = 05 positions
6 = 06 positions
7 = 07 positions
8 = 08 positions
9 = 09 positions
A = 10 positions
B = 11 positions
C = 12 positions
D = 13 positions
E = 14 positions
F = 15 positions
G = 16 positions

Valve type
A = N331.R0A (EV. 3/2 NC 24VDC d.1,1)
B = N331.R0B (EV. 3/2 NC 24VDC d.1,5)
C = N338.R0E (EV. 3/2 NC 24VDC 1W d.0,8)
D = N341.R0A (EV. 3/2 NO 24VDC d.1,1)
E = N341.R0B (EV. 3/2 NO 24VDC d.1,5)
G = N321.R0A (EV.2/2 NC 24VDC d.1,1)
H = N321.R0B (EV.2/2 NC 24VDC d.1,5)

NOTE:
The "R"letter indicates that the coil is mounted upside-down (faces down). For prices and technical features of these valves please refer to the correspondent standard version (not R) included in the price list and catalogue.

Functional schematics

Normally Closed (N.C.) 3/2 or 2/2

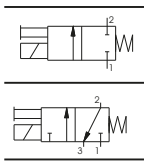

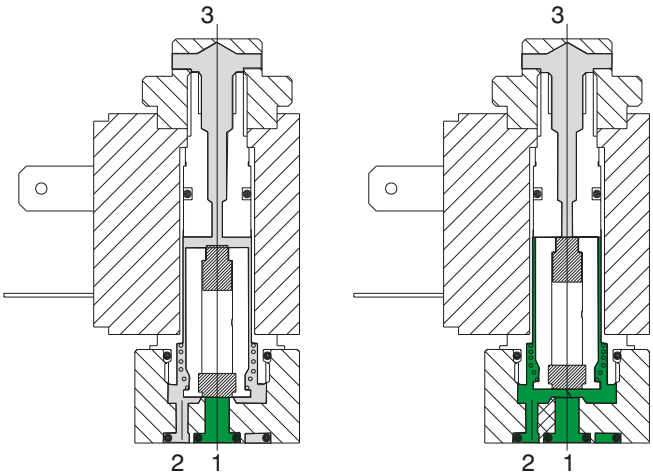

AT REST ACTUATED

1 = INLET PORT
2 = OUTLET PORT
3 = EXHAUST PORT
(Plugged if 2/2)

Normally Open (N.O.) 3/2 or 2/2

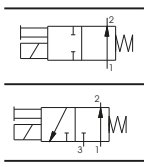

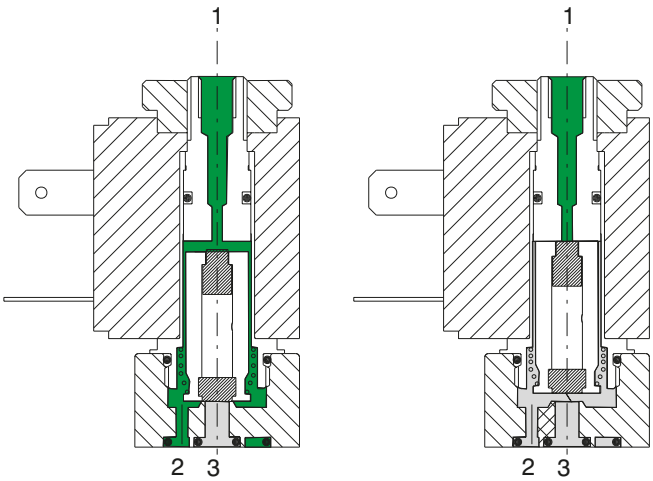

AT REST ACTUATED

Construction characteristics

Electrical parts: Solenoids: the solenoid consist of coils having different diameter copper wire windings insulated according standards "H"; they are encased in a nylon-glass compound. All parts are corrosion resistant.

Mechanical parts: Nickel plated brass tube nitrile viton seals stainless steel plunger (AISI 430F), stainless steel adjusted springs, viton poppet seals, tropicalized zinc alloy interface plate, nickeled brass manual override, nickel steel coil lock nut, zinc steel mounting screw. To be usable, the solenoids and microsolenoids have to be attached either to a base or directly to the distributor's operators by means of connectors M5 or G 1/8". These solenoids are available in all voltages and frequences used in the world. The following are the technical characteristics of the solenoid.

Overall dimensions and technical information are provided solely for informative purposes and may be modified without notice

Technical characteristics

Pneumatic	Working pressure	0 - 10 bar	
	Orifice size	1,3 mm	(0,9 mm for 2 W)
	Maximum fluid temperature	50°C	
	Maximum ambient temperature	50°C	
	Maximum flow rate at 6 bar with Δp 1 bar	53 Nl/min	(20Nl/min. for 2 W)
	Cycles/minute	700	
	Fluids	Air-vacuum-inert gases	
	Lubrication	non required	
	Life	45 to 50 million cycles	
Electrical	Power consumption holding - D.C	5 W	(2.5 W) low consumption
	Power consumption holding - A.C	9 VA	(6 VA) low consumption
	Operating voltage tolerance	±10%	
	Response time opening *	8 ms	
	Response time closing *	6 ms	
	Insulation of the copper wire	H	
	Insulation of the coil	F	
	Connector protection	IP 65	
	Cable protection	DIN 43650 INDUSTRIAL FORM	

(*) "Shifting time of pneumatic directional control valves or moving parts, logic devices were measured in accordance to ISO 12238:2001, Pneumatic fluid power - Directional control valves - Measurement of shifting time"

Maintenance and replacement parts

Maintenance practices for these valves are similar to those already detailed for other products- replacement of the plunger or poppet is not advisable since the new replacement would not provide the best fit with the rest of the already used valve. Special care should be taken that no dirt is accumulated between the working surface of fixed core and the plunger which would result in vibrations and overheating of the solenoid. In the case of microsolenoid it must be assured that the alternate current coil is not charged when the machanical part is not mounted to avoid destruction of the coil. The electrical connections have to be perfect, especially where low currents are used (12-24V). Oxidation of contacts between the connector and the coil can lead to intermittent malfunctions which are difficult to trace. Oxidation of contacts due to humidity or corrosive atmosphere are one of the most common causes of false alarms. Clean the contacts with appropriate spray.

Mechanical actuator for miniature solenoid valve

Ordering code	
M 2	Normally Closed (N.C.)
M 2P	Normally Closed (N.C.) treaded lock nut
M 2/9	Normally Closed (N.C.) 2 W 24 VDC

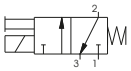

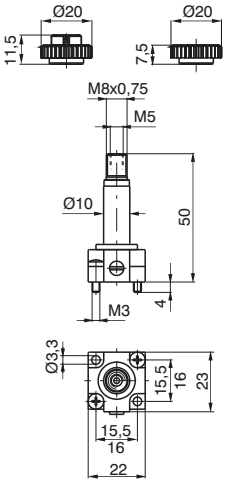

Weight 51 gr.

M 2/1 Normally Open (N.O.) air feeding through fix flunger

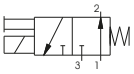

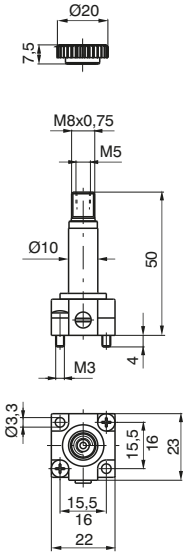

Weight 48 gr.

Normally Open (N.O.) air feeding through base

MM 7

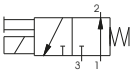

Weight 46 gr.

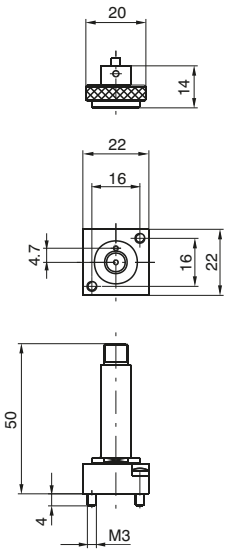

Ordering code N.O.	Available voltages Coil	
MB10/1	24 D.C. (8 Watt)	Direct current
MB17/1 **MB21/1** **MB22/1** **MB24/1**	24/50 48/50 110/50 230/50	Alternating current 50 Hz
MB37/1 **MB39/1** **MB41/1**	24/60 110/60 230/60	Alternating current 60 Hz
MB56/1 **MB57/1** **MB58/1**	24/50-60 110/50-60 230/50-60	Alternating current 50/60 Hz

Overall dimensions and technical information are provided solely for informative purposes and may be modified without notice

Coil

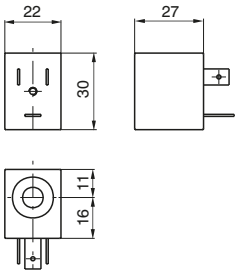

Weight 54 gr.

* Use only with M2/9

Ordering code	Available voltages Coils	
MB 4 **MB 5** **MB 6**	12 D.C. 24 D.C. 48 D.C.	Direct current
MB 9*	24 D.C. (2 Watt)	(Direct current, low consumption)
MB 17 **MB 21** **MB 22** **MB 24**	24/50 48/50 110/50 230/50	Alternating current 50 Hz
MB 37 **MB 39** **MB 41**	24/60 110/60 230/60	Alternating current 60 Hz
MB 56 **MB 57** **MB 58**	24/50-60 110/50-60 230/50-60	Alternating current 50/60 Hz
MB 66 **MB 67** **MB 68**	24/50-60 110/50-60 230/50-60	Alternating current (low consumption) 50/60 Hz

Miniature solenoid valve Normally Closed (N.C.)

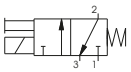

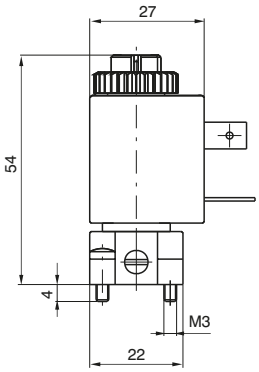

Weight 100 gr.

Ordering code	Available voltages Miniature solenoid valve N.C.	
M 2.4 **M 2.5** **M 2.6** **M 2.9**	12 D.C. 24 D.C. 48 D.C. 24 D.C. (2 Watt)	Direct current
M 2.17 **M 2.21** **M 2.22** **M 2.24**	24/50 48/50 110/50 230/50	Alternating current 50 Hz
M 2.37 **M 2.39** **M 2.41**	24/60 110/60 230/60	Alternating current 60 Hz
M 2.56 **M 2.57** **M 2.58**	24/50-60 110/50-60 230/50-60	Alternating current 50/60 Hz
M 2.66 **M 2.67** **M 2.68**	24/50-60 110/50-60 230/50-60	Alternating current (low consumption) 50/60 Hz

Miniature solenoid valve Normally Open (N.O.)

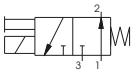

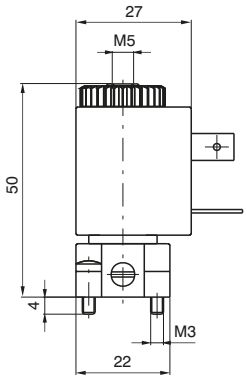

Weight 103 gr.

Ordering code	Available voltages Miniature solenoid valve N.O.	
M 2/1.4 **M 2/1.5** **M 2/1.6** **M 2/1.9**	12 D.C. 24 D.C. 48 D.C. 24 D.C. (2 Watt)	Direct current
M 2/1.17 **M 2/1.21** **M 2/1.22** **M 2/1.24**	24/50 48/50 110/50 230/50	Alternating current 50 Hz
M 2/1.37 **M 2/1.39** **M 2/1.41**	24/60 110/60 230/60	Alternating current 60 Hz
M 2/1.56 **M 2/1.57** **M 2/1.58**	24/50-60 110/50-60 230/50-60	Alternating current 50/60 Hz

External feeding base

Use with solenoid valves for piloting pressure different from the using pressure

Ordering code
305.10.05

Weight 18 gr.

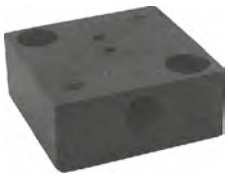

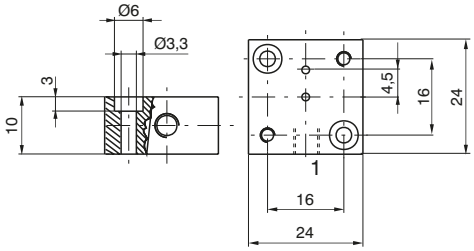

Individual base

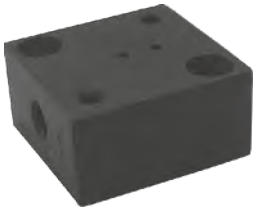

In line ports - thread M5

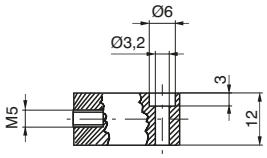

1 = INLET PORT (N.C.)
2 = OUTLET PORT

With a N.O. miniature solenoid valve
1 = EXHAUST
2 = OUTLET PORT

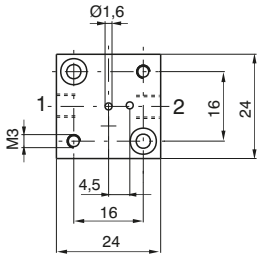

Ordering code

305.00.00

Weight 56 gr.

90° Port - thread M5

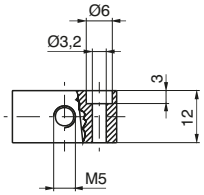

1 = INLET PORT (N.C.)
2 = OUTLET PORT (N.C)

With a N.O, miniature solenoid valve
1 = EXHAUST
2 = OUTLET PORT

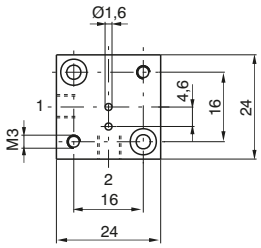

Ordering code

305.90.00

Weight 56 gr.

In line ports - thread G 1/8"

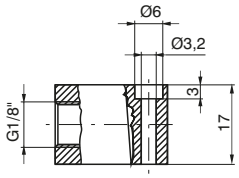

1 = INLET PORT (N.C.)
2 = OUTLET PORT (N.C)

With a N.O. miniature solenoid valve
1 = EXHAUST
2 = OUTLET PORT

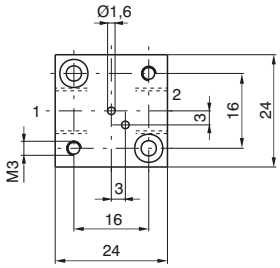

Ordering code

305.00.18

Weight 75 gr.

90° Port - thread G 1/8"

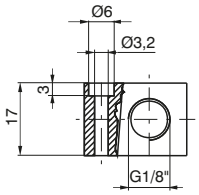

1 = INLET PORT (N.C.)
2 = OUTLET PORT (N.C.)

With a N.O. miniature solenoid valve
1 = EXHAUST
2 = OUTLET PORT

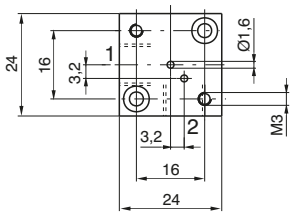

Ordering code

305.90.18

Weight 75 gr.

Overall dimensions and technical information are provided solely for informative purposes and may be modified without notice

Modular bases for series mounting

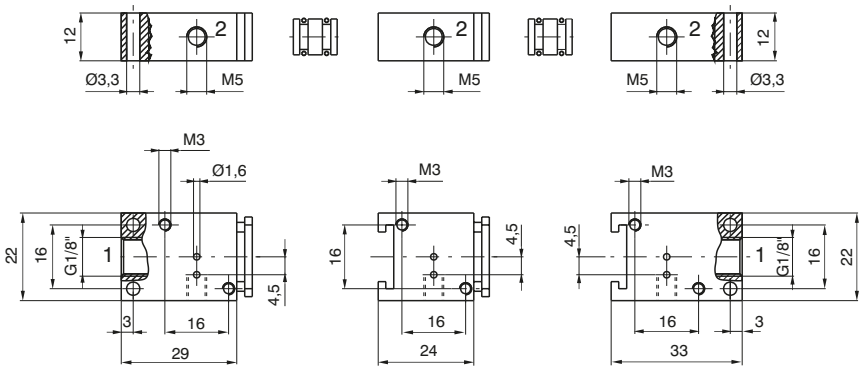

Initial base *Intermediate base* *Last base*

Ordering code

Initial base
305.05.00
Weight 57 gr.

Intermediate base
305.06.00
Weight 44 gr.

Last base
305.07.00
Weight 53 gr.

Bored spacer
305.05.01
Weight 3 gr.

Solid spacer
305.05.02
Weight 4 gr.

Multiple integral bases for series mounting

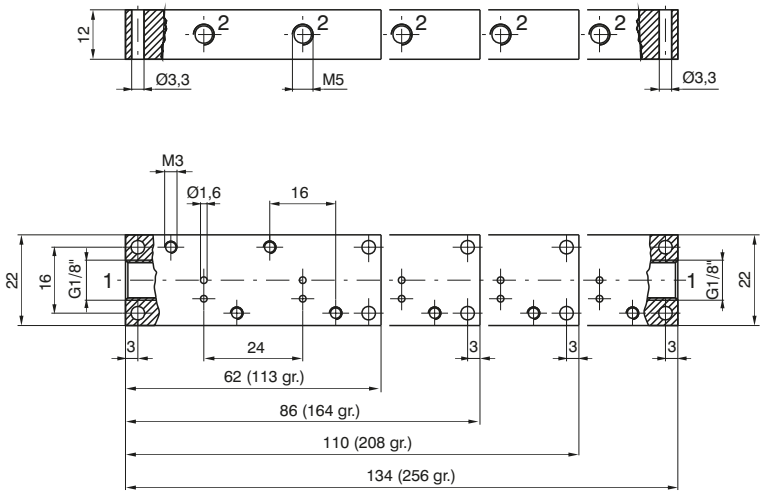

Ordering code

305.08.02 **2** positions
305.08.03 **3** positions
305.08.04 **4** positions
305.08.05 **5** positions

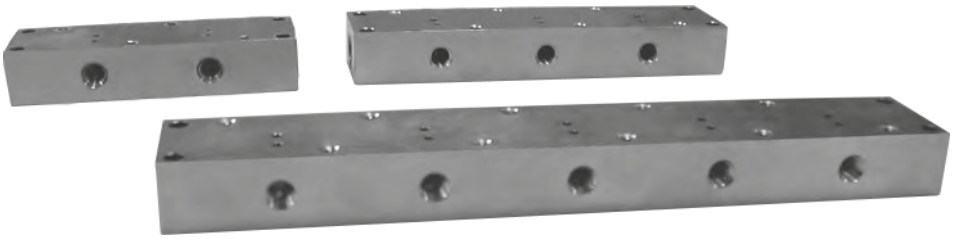

Functional schematic

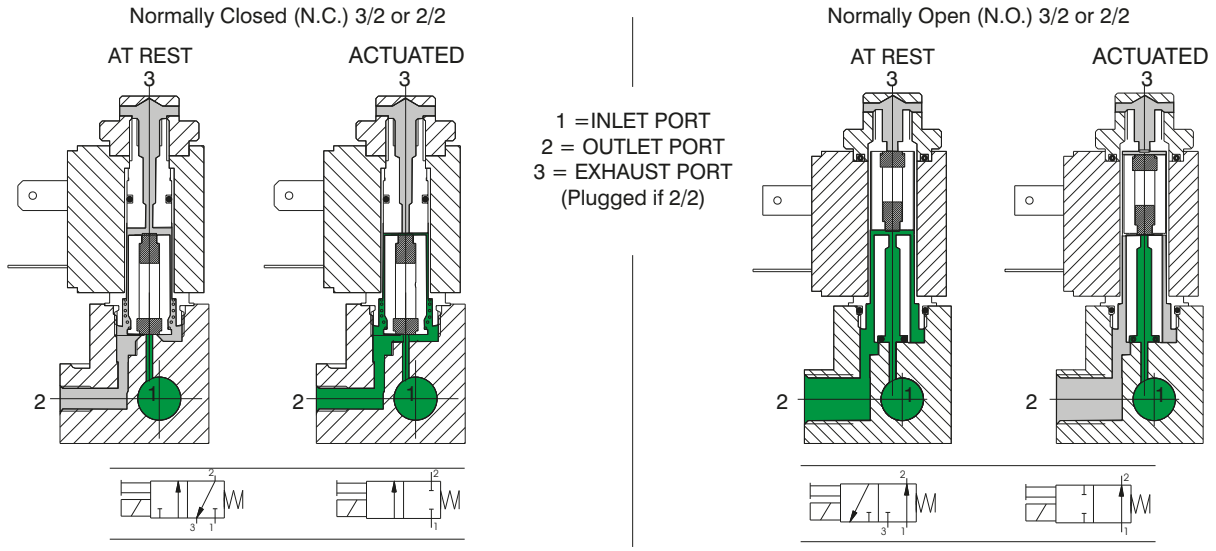

Construction characteristics

Electrical parts: Solenoids: the solenoid consist of coils having different diameter copper wire windings insulated according standards "H"; they are encased in a nylon-glass compount. All parts are corrosion resistant.

Mechanical parts: Nickel plated brass tube nitrile (NBR) stainless steel plunger (AISI 430F), stainless steel adjusted springs, viton poppet seals, tropicalized zinc alloy interface plate, nickeled brass manual override, Technopolymer coil lock nut, zinc steel mounting screws. Electrical connectors are standard.

Technical characteristics

Pneumatic	Working pressure	0 - 10 bar	
	Orifice size	1,3 mm	(1,1 mm for 2 W)
	Maximum fluid temperature	50°C	
	Maximum ambient temperature	50°C	
	Maximum flow rate at 6 bar with ?p = 1	53 Nl/min	(35 Nl/min. for 2 W)
	Cycles/minute	700	
	Fluids	Air-Vacuum-Inert gases	
	Lubrication	Non needed	
	Life	40 to 50 million cycles	
Electrical	Power consumption holding - D.C	5 W	(2 W) low consumption
	Power consumption holding - A.C	8 VA	(6 VA) low consumption
	Operating voltage tolerance	±10%	
	Response time opening *	8 ms	
	Response time closing *	6 ms	
	Insulation of the copper wire	H	
	Insulation of the coil	F	
	Connector protection	IP 65	
	Cable protection	DIN 43650 INDUSTRIAL FORM	

(*) "Shifting time of pneumatic directional control valves or moving parts, logic devices were measured in accordance to ISO 12238:2001, Pneumatic fluid power - Directional control valves - Measurement of shifting time"

Maintenance and replacement parts

Maintenace practices for these valves are similar to those already detailed for other products - replacement of the plunger or poppet is not advisable since the new replacement would not provide the best fit with the rest of the already used valve.

Special care should be taken that no dirt is accumulated between the working surface of fixed core and the plunger which would result in vibrations and overheating of the solenoid. In the case of microsolenoid it must be assured that the alternate current coil is not charged when the machanical part is not mounted to avoid destruction of the coil.

The electrical connections have to be perfect, especially where low currents are used (12-24 V). Oxidation of contacts between the connector and the coil can lead to intermittent malfunctions which are difficult to trace. Oxidation of contacts due to humidity or corrosive atmosphere are one of the most common causes of false alarms. Clean the contacts with appropriate spray.

Overall dimensions and technical information are provided solely for informative purposes and may be modified without notice

Mechanical actuator for Normally Closed (N.C.)
Miniature solenoid valve

Normally Closed (N.C.)

Ordering code

305.M1 **A** = G 1/8"
355.M1 **A** = M5
345.M1 **A** = Push in fitting for 4 mm tube

305.M1/9 **A** = G 1/8"
355.M1/9 **A** = M5
345.M1/9 **A** = Push in fitting for 4 mm tube

2 W
24 DC

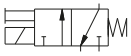

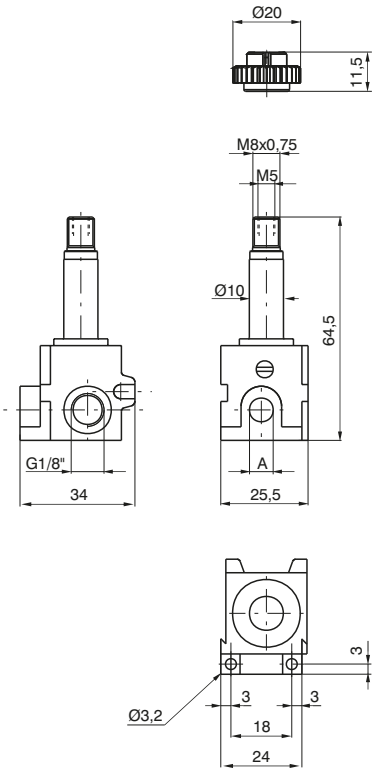

Weight 95 gr.

Normally Open (N.O.)

Ordering code

305.M1/1 **A** = G 1/8"
355.M1/1 **A** = M 5
345.M1/1 **A** = Push in fitting for 4 mm tube

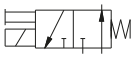

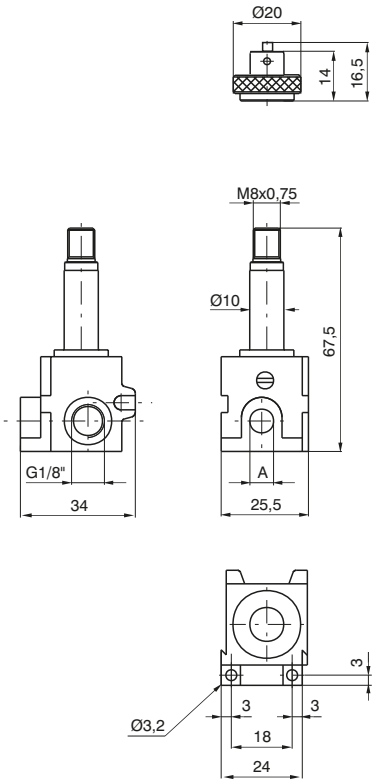

Weight 106 gr.

Miniature solenoid valve

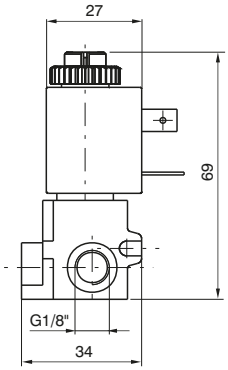

Normally Closed (N.C.)

Ordering code			Available voltage miniature solenoid	
G 1/8"	M5	TUBE Ø4 mm		
305.M4 **305.M5** **305.M6** **305.M9**	**355.M4** **355.M5** **355.M6** **355.M9**	**345.M4** **345.M5** **345.M6** **345.M9**	12 D.C. 24 D.C. 48 D.C. 24 D.C. (2 Watt)	Direct current
305.M17 **305.M21** **305.M22** **305.M24**	**355.M17** **355.M21** **355.M22** **355.M24**	**345.M17** **345.M21** **345.M22** **345.M24**	24/50 48/50 110/50 230/50	Alternating current 50 Hz
305.M37 **305.M39** **305.M41**	**355.M37** **355.M39** **355.M41**	**345.M37** **345.M39** **345.M41**	24/60 110/60 230/60	Alternating current 60 Hz
305.M56 **305.M57** **305 M58**	**355.M56** **355.M57** **355.M58**	**345.M56** **345 M57** **345 M58**	24/50-60 110/50-60 230/50-60	Alternating current 50/60 Hz
305.M66 **305.M67** **305 M68**	**355.M66** **355.M67** **355.M68**	**345.M66** **345 M67** **345 M68**	24/50-60 110/50-60 230/50-60	Alternating current low consumption 50/60 Hz

Weight 149 gr.

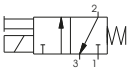

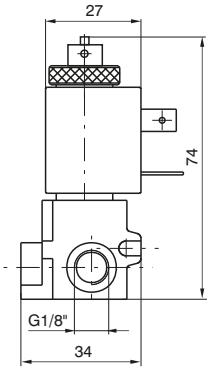

Normally Open (N.O.)

Ordering code			Available voltages miniature solenoid	
G 1/8"	M5	TUBE Ø4 mm		
305.M10/1	**355.M10/1**	**345.M10/1**	24 D.C. (8 Watt)	Direct current
305.M17/1 **305.M21/1** **305.M22/1** **305.M24/1**	**355.M17/1** **355.M21/1** **355.M22/1** **355.M24/1**	**345.M17/1** **345.M21/1** **345.M22/1** **345.M24/1**	24/50 48/50 110/50 230/50	Alternating current 50 Hz
305.M37/1 **305.M39/1** **305.M41/1**	**355.M37/1** **355.M39/1** **355.M41/1**	**345.M37/1** **345.M39/1** **345.M41/1**	24/60 110/60 230/60	Alternating current 60 Hz
305. M56/1 **305. M57/1** **305. M58/1**	**355.M56/1** **355.M57/1** **355.M58/1**	**345.M56/1** **345.M57/1** **345.M58/1**	24/50-60 110/50-60 230/50-60	Alternating current 50/60 Hz

Weight 165 gr.

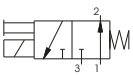

Overall dimensions and technical information are provided solely for informative purposes and may be modified without notice

Coil

Weight 54 gr.

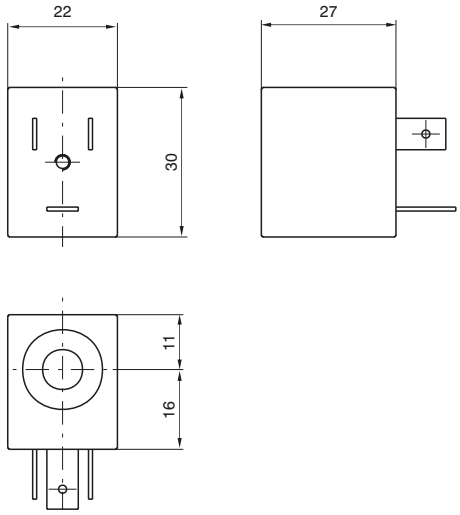

Ordering code		Available voltages Coil	
N.C.	N.O.		
MB4 **MB5** **MB6** **MB9**	 **MB10/1**	12 D.C. 24 D.C. 48 D.C. 24 D.C. (2 Watt) 24 D.C. (8 Watt)	Direct current
MB17 **MB21** **MB22** **MB24**	**MB17/1** **MB21/1** **MB22/1** **MB24/1**	24/50 48/50 110/50 230/50	Alternating current 50 Hz
MB37 **MB39** **MB41**	**MB37/1** **MB39/1** **MB41/1**	24/60 110/60 230/60	Alternating current 60 Hz
MB56 **MB57** **MB58**	**MB56/1** **MB57/1** **MB58/1**	24/50-60 110/50-60 230/50-60	Alternating current 50/60 Hz
MB66 **MB67** **MB68**	/	24/50-60 110/50-60 230/50-60	Alternating current (low consumption) 50/60 Hz

Electrical connector

Ordering code	
305.11.00	Normal
305.11.0_L	with Led 1 = 24 V D.C. / A.C. 2 = 110 V 50/60 Hz 3 = 230 V 50/60 Hz

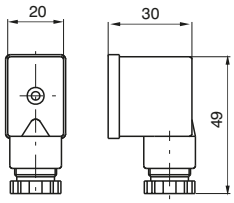

Weight 19 gr.

BISTABILE
General

The most interesting aspects of this bi-stable miniature solenoid valve operating with D.C. only, is that it can be commuted with a simple electric impulse and stay commuted till an inverted polarity impulse deactivates it. It means that the valve is not automatically deactivated if current fail as happens with normal solenoid valves.

The applications differ but are all based on above mentioned feature.

The internal construction is relatively special. The fix plunger is equipped with a permanent magnet that hold or release the mobile plunger according to the magnetic field generated by the coil.

A specific coil is used for this application and it cannot be replaced by the standard ones.

Ordering code is **MBB5**.

Miniature solenoid valve for distributors and bases

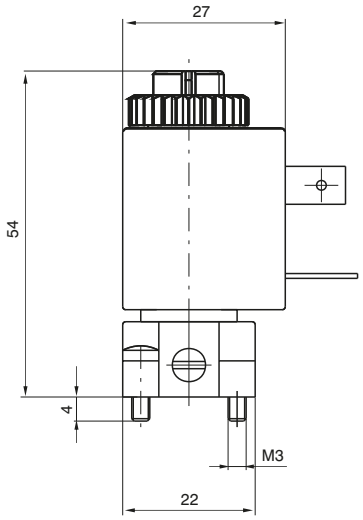

Ordering code
M5/B

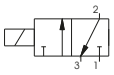

Miniature solenoid valve with inseries mounting base

Ordering code
305.M5/B = G 1/8"
355.M5/B = M5
345.M5/B = Fitting for 4 mm tube

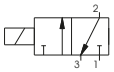

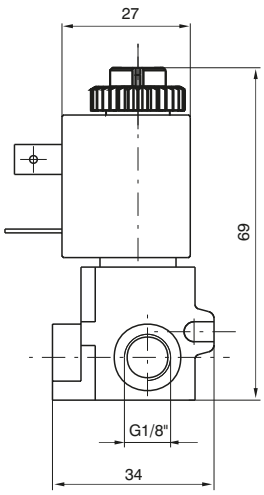

Overall dimensions and technical information are provided solely for informative purposes and may be modified without notice

Electric pilot CNOMO (coil not included)

Mechanics with base for solenoid to be used where an electric pilot system is required.
May be used on all sizes and is standardized as an interface on the distributor.
The base is fitted with a manual control which is pulse actuated, without check, or with two stable positions, actuated by means of a screwdriver (pressing down and turning clockwise by 90°). Two different types of solenoids can be mounted on the stem, one in conformity with ISO standard size 30x38 and ISO 4400 (DIN 43650) electrical connection, and a compact one size 22x27, having the same performance but at lower price. The technical characteristics of the latter are described in the catalogue, series 300, and refer to MB solenoids. The base is fitted with screws (M4x30) for fastening to the distributor.

Ordering code

M | | |

P = Manual 1 position
R = Manual 2 positions

3 = Mechanics CNOMO
4 = 2-W Mechanics CNOMO

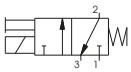

Weight 49 gr.

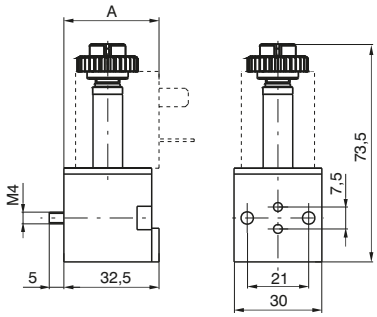

A = 33 (with MB solenoid)
A = 38 (with MC solenoid)

General characteristics

Structural	Body	Thermoplastic polyester	
	Stem	Nickel-platted brass	
	Cores	AISI 430F stainless steel	
	Springs	AISI 302 stainless steel	
	Shutters	FPM	
	Other seals	NBR	
	Manual control	Nickel-platted brass	
Pneumatic	Fluid	Air, Neutral gases	
	Working pressure	0-10 bar	
	Fluid ambient temperature	-5°C - +50°C	
	Flow rate at 6 bar with Δp 1 bar	53 Nl/min	(20 Nl/min for 2 W)
	Nominal flow cross section	1,3 mm	(0,9 mm for 2 W)
Electric	Power consumption (inrush) - A.C.	13 VA	
	Power consumption holding - D.C.	4 W	(2 W)
	Power consumption holding - A.C.	8,5 VA	
	Operating voltage tolerance	±10%	
	Response time opening *	13 ms	
	Response time closing *	5 ms	
	Insulation of the copper wire	H	
	Insulation of the coil	F	
	Connector protection	IP 65	
	Cable protection	DIN 43650 “A” FORM	

(*) "Shifting time of pneumatic directional control valves or moving parts, logic devices were measured in accordance to ISO 12238:2001, Pneumatic fluid power - Directional control valves - Measurement of shifting time"

Coil

Ordering code	Available voltages Coil
MC5	24 D.C.
MC9	24 D.C. (2 Watt)
MC56	24/50-60 Hz
MC57	110/50-60 Hz
MC58	230/50-60 Hz

Weight 110 gr.

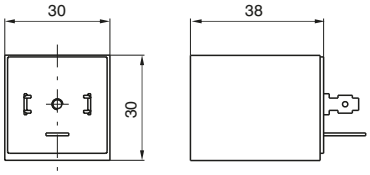

Functional schematic

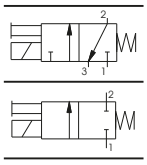

1 =INLET PORT
2 =OUTLET PORT
3 =EXHAUST PORT
(Plugged if 2/2)

Normally Closed (N.C.) 3/2 or 2/2

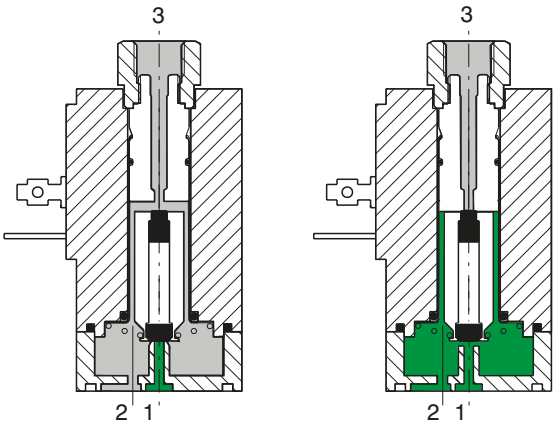

AT REST ACTUATED

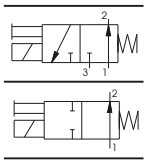

Normally Open (N.O.) 3/2 or 2/2

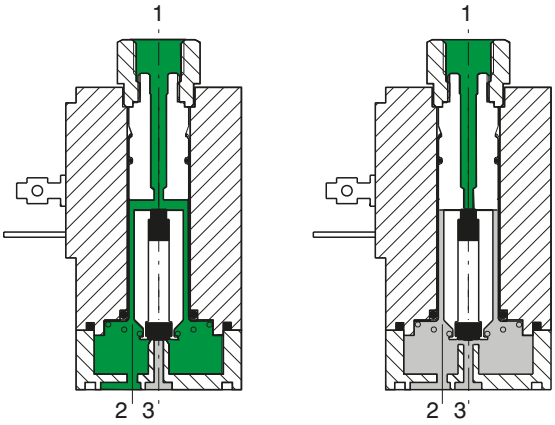

AT REST ACTUATED

Construction characteristics

Electrical parts:

Solenoids: the solenoid consists of coils having different diameter copper wire windings insulated according standards "H"; they are encased in a nylon-glass compound. All parts are corrosion resistant.

Mechanical parts:

Stainless steel tube and plunger (AISI 430F), stainless steel adjusted springs, viton poppet seals, tropicalized zinc alloy interface plate, nitrile (NBR) seal nickeled brass manual override, nickel steel coil lock nut, zinc steel mounting screws. To be usable, the solenoids have to be attached either to a base or directly to the distributor's operators by means of connectors G 1/8".Electrical connectors are standard. These solenoid are available in all voltages and frequences used in the world. The following are the technical characteristics of the solenoid.

Overall dimensions and technical information are provided solely for informative purposes and may be modified without notice

Technical characteristics

Pneumatic	Working pressure	0 - 10 bar
	Orifice size	1,8 mm
	Maximum fluid temperature	50°C
	Maximum ambient temperature	50°C
	Maximum flow rate at 6 bar with $\Delta p = 1$	80 Nl/min
	Cycles/minute	700
	Fluids	Air-Vacuum-Inert gases
	Lubrication	Not required
	Life	40 to 50 millions
Electric	Power consumption (inrush) - D.C.	-
	Power consumption (inrush) - A.C.	19,5 VA
	Power consumption holding - D.C.	8,2 W
	Power consumption holding - A.C.	9 VA
	Operating voltage tolerance	±10%
	Response time opening *	15 ms
	Response time closing *	30 ms
	Insulation of the copper wire	H
	Insulation of the coil	F
	Connector protection	IP 65
	Cable protection	DIN 43650 “A” FORM

(*) "Shifting time of pneumatic directional control valves or moving parts, logic devices were measured in accordance to ISO 12238:2001, Pneumatic fluid power - Directional control valves - Measurement of shifting time"

Maintenance and replacement parts

Maintenance practices for these valves are similar to those already detailed for other products - replacement of the plunger or poppet is not advisable since the new replacement would not provide the best fit with the rest of the already used valve.

Special care should be taken that no dirt is accumulated between the working surface of fixed cores 3 and the plunger 2 which would result in vibrations and overheating of the solenoid. In the case of microsolenoid it must be assured that the alternate current coil is not charged when the mechanical part is not mounted to avoid destruction of the coil.

The electrical connections have to be perfect, especially where low currents are used (12-24 V). Oxidation of contacts between the connector and the coil can lead to intermittent malfunctions which are difficult to trace. Oxidation of contacts due to humidity or corrosive atmosphere are one of the most common causes of false alarms. Clean the contacts with appropriate spray.

Solenoid valve S and S/1

Weight 220 gr.

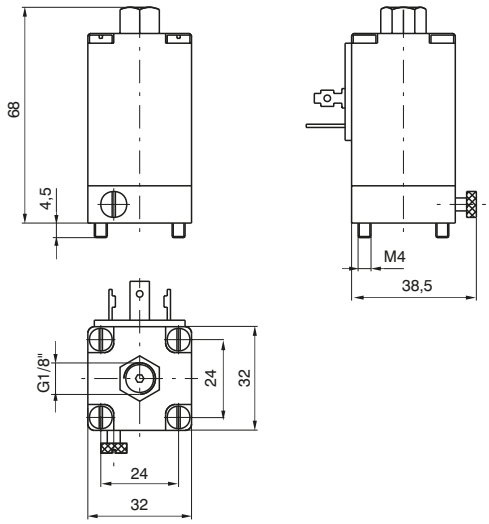

Normally Closed
(N.C.) - **S**

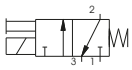

Normally Open
(N.O.) - **S/1**

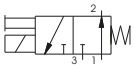

Ordering code		Available voltages Coil	
S 2 **S 4** **S 5** **S 6**	**S 2/1** **S 4/1** **S 5/1** **S 6/1**	6 D.C. 12 D.C. 24 D.C. 48 D.C.	Direct current
S 16 **S 17** **S 19** **S 20** **S 21** **S 22** **S 23** **S 24**	**S 16/1** **S 17/1** **S 19/1** **S 20/1** **S 21/1** **S 22/1** **S 23/1** **S 24/1**	12/50 24/50 32/50 42/50 48/50 110/50 115/50 230/50	Alternating current 50 Hz
S 36 **S 37** **S 38** **S 39** **S 40** **S 41**	**S 36/1** **S 37/1** **S 38/1** **S 39/1** **S 40/1** **S 41/1**	12/60 24/60 48/60 110/60 115/60 230/60	Alternating current 60 Hz
S 56 **S 57** **S 58**	**S 56/1** **S 57/1** **S 58/1**	24/50-60 110/50-60 230/50-60	Alternating current 50/60 Hz

Closing plate

Ordering code
300.12.00

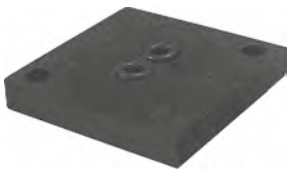

Weight 14 gr.

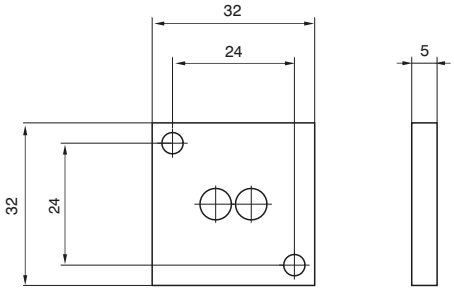

External feeding base

To be used with electrodistributeurs to get a different piloting pressure from the line one.

Ordering code
300.10.05

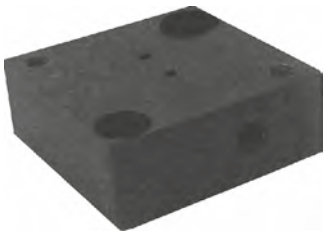

Weight 35 gr.

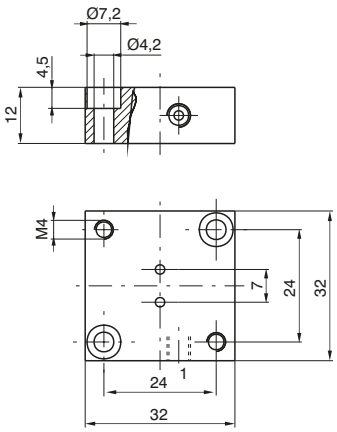

Overall dimensions and technical information are provided solely for informative purposes and may be modified without notice

Individual base

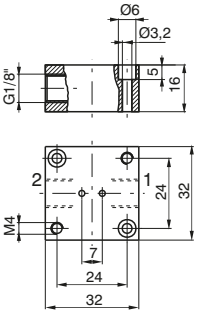

Weight 40 gr.

In line port - thread G 1/8"
1 = INLET PORT (N.C.)
2 = OUTLET PORT (N.C.)
With solenoid valve N.O.
1 = EXHAUST PORT
2 = OUTLET PORT

Ordering code
300.04.00

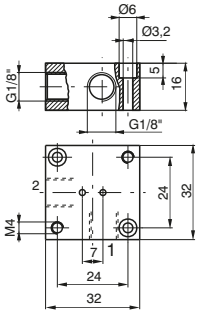

Weight 40 gr.

90° Port - thread G 1/8"
1= INLET PORT (N.C.)
2 = OUTLET PORT (N.C)
With solenoid valve N.O.
1 = EXHAUST PORT
2 = OUTLET PORT

Ordering code
300.04.90

Electrical connector

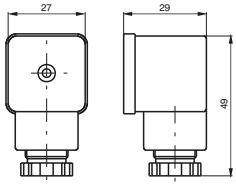

Weight 25 gr.

Ordering code	
300.11.00	Standard
300.11.0_L	Led
	1 = 24 V D.C. / A.C.
	2 = 110 V 50/60 Hz
	3 = 230 V 50/60 Hz

Modular bases for series mounting

Ordering code
Initial base **300.05.00**
Intermediate base **300.06.00**
Last base **300.07.00**
Bored specer **300.05.01** Weight 5 gr.
Solid space **300.05.02** Weight 6 gr.

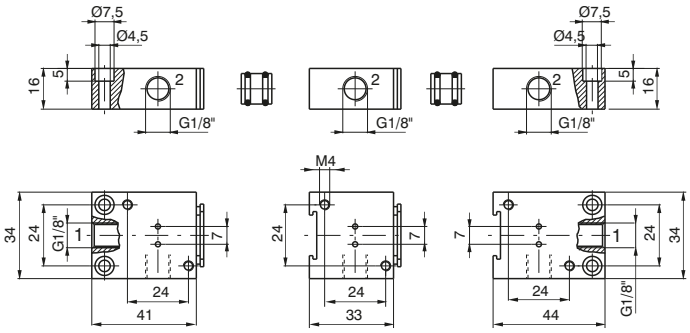

Initial base Intermediate base Last base

Weight 52 gr. Weight 40 gr. Weight 52 gr.

Multiple integral bases for series mounting

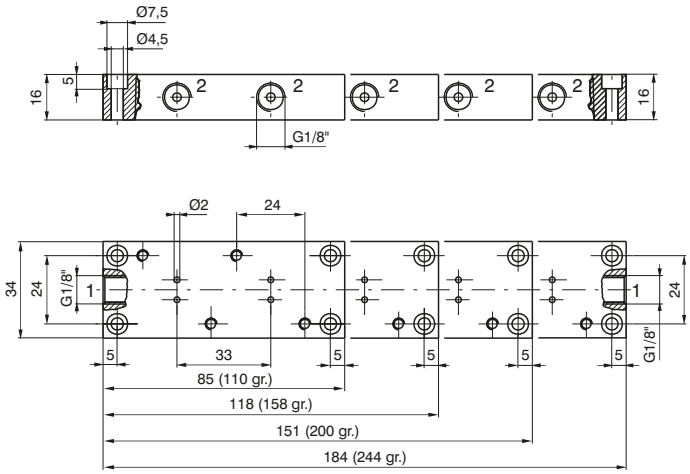

Ordering code	
300.08.02	**2** positions
300.08.03	**3** positions
300.08.04	**4** positions
300.08.05	**5** positions

General

The series c UL us homologated solenoid valves (valid for USA and Canada file n. E206325-VAIU2, VAIU8) are different from the standard ones for microsolenoid made with an injected RYNITE embedded copper wire (they are included in class "F" insulation).

Refer to standard versions as for as other details and accessories to be used with solenoid valves.

Miniature solenoid valve 10mm

Ordering code

UN3 __ __ . __

- **6** = 2/2 N.C.
- **7** = 3/2 N.C.
- **8** = 3/2 N.O.

- **1** = 24 V D.C.
- **2** = 12 V D.C.

- **1** = 90° connector with Led
- **2** = Cable 300 mm (IP40)
- **3** = Line connector with Led
- **4** = 90° connector without Led
- **5** = Line connector without Led
- **32** = Cable (300 mm) coil incorporated (IP65)

Miniature solenoid valve 15mm

Ordering code

UN3 __ __ . __ __

- **3** = 3/2 N.C.
- **4** = 3/2 N.O.

- **1** = 24 V D.C.
- **2** = 12 V D.C.
- **5** = 24 V 50/60 Hz
- **6** = 110-120 V 50/60 Hz
- **7** = 230V 50/60 Hz

- **A** = Orifice Ø1,1
- **B** = Orifice Ø1,5

- **0** = Faston
- **1** = Faston EN17301-803 (Ex DIN 43650)
- **2** = Cables* (300 mm)

* On request and for large quantity only (only 24 V D.C. 2,3 W)

Miniature solenoid valve 22mm

Ordering code

Coil	**UMB** __	
Miniature solenoid valve N.C.	**UM2** . __	
Miniature solenoid valve N.O.	**UM2/1.** __	

- **4** = 12V D.C.
- **5** = 24V D.C.
- **56** = 24V 50/60 Hz
- **57** = 110-120 V 50/60 Hz
- **58** = 230V 50/60 Hz

Overall dimensions and technical information are provided solely for informative purposes and may be modified without notice

Miniature solenoid valve 22mm for series mounting

Ordering code

Coil N.C. **UMB** __
- **4** = 12 V D.C.
- **5** = 24 V D.C.
- **56** = 24 V 50/60 Hz
- **57** = 110-120 V 50/60 Hz
- **58** = 230 V 50/60 Hz

Coil N.O. **UMB** __/1
- **10** = 24 V D.C. 8W
- **56** = 24 V 50/60 Hz
- **57** = 110-120 V 50/60 Hz
- **58** = 230 V 50/60 Hz

Solenoid valve N.C. **U3** __ **5.M** __
- **0** = G1/8"
- **5** = M5
- **4** = fitting for 4mm tube

- **4** = 12 V D.C.
- **5** = 24 V D.C.
- **56** = 24 V 50/60 Hz
- **57** = 110-120 V 50/60 Hz
- **58** = 230 V 50/60 Hz

Solenoid valve N.O. **U3** __ **5.M** __/1
- **0** = G1/8"
- **5** = M5
- **4** = fitting for 4mm tube

- **10** = 24 V D.C. 8W
- **56** = 24 V 50/60 Hz
- **57** = 110-120 V 50/60 Hz
- **58** = 230 V 50/60 Hz

Bi-stable miniature solenoid valve 22mm

Ordering code

Coil **UMBB5**

Miniature solenoid valve for distributors and bases (N.C.) **UM5/B**

Miniature solenoid valve with inseries mounting base (N.C.) **U3** __ **5.M5/B**
- **0** = G1/8"
- **5** = M5
- **4** = fitting for 4mm tube

Solenoid valve 30 mm (for mechanics M3 and M4)

Ordering code

UMC5 = 24 V D.C.
UMC56 = 24 V 50/60 Hz
UMC57 = 110÷120 V 50/60 Hz
UMC58 = 230 V 50/60 Hz

Solenoid valve 32 mm

Ordering code

Solenoid valve N.C. **US** __

Solenoid valve N.O. **US** __/1
- **4** = 12 V D.C.
- **5** = 24 V D.C.
- **56** = 24 V 50/60 Hz
- **57** = 110-120 V 50/60 Hz
- **58** = 230 V 50/60 Hz

Series 700 - For compressed air and vacuum

General

The large flow valves and solenoid poppet valves for compressed air and vacuum.
Are manufactured for 3/2 and 2/2 versions only, either normally close and normally open.
For the compressed air oparation, the application is similar to the equivalent spool valves while for the vacuum operation a particular attention should be paid to the valve selected and its connection to the pump.
For the electric pilot it is used a normal miniature solenoid M2 with pneumatic actuator and the special miniature solenoid M2/V with vacuum.
The ordering code are referring to the solenoid valves with mechanics "M2" or "M2/V" assembled.
Coil are not included and have to be ordored separately (see Series 300).
Coil c UL us homologated are available (see 300 Series).

Construction characteristics

	G 3/8"	G 1/2" - G 3/4"	G 1"	G 1 1/2"
Body	Aluminium	Zinc alloy	Aluminium	Aluminium
Actuators	NBR			
Bottom plates	Aluminium			
Springs	Stainless steel			
Actuators rod	Stainless steel			
Pistons	Aluminium			
Piston seals	NBR			

Use and maintenance

These valves have a mean life of 10 to 15 million cycles under normal operating conditions.
Lubrication is not required for good operation but we recommend good filtration to avoid dirty deposit causing malfunction.
Please ensure that the valve is being used according with the manufacturers specification, such as air pressure and temperature.
The exhaust port of the distributor has to be protected in a dusty and dirty environment.
For these products, according to the construction technique and special application, is not required any maintenance with parts replacement.
When necessary it is sufficient to clean the internal parts.
When it is used the solenoid valves with internal pilot, either for air or vacuum, inlet flow rate must be equal or higher that the required consumption flow rate.
Otherwise is better choose the external pilot version.

Overall dimensions and technical information are provided solely for informative purposes and may be modified without notice

Pneumatic - Spring

Coding: 779.32.11.Ⓕ

Operational characteristics	
Fluid	Filtered air. No lubrication needed, if applied it shall be continuous
Max working pressure (bar)	10
Minimum piloting pressure (bar)	2,5
Temperature °C	-10 ÷ +70
Flow rate at 6 bar with Δp=1 (Nl/min)	1800
Orifice size (mm)	10
Working ports size	G3/8"
Pilot ports size	G1/8"

	FUNCTION
Ⓕ	**1C** = Normally Closed
	1A = Normally Open

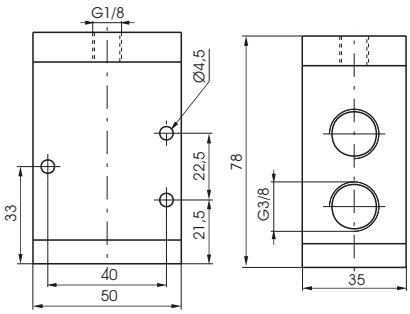

For compressed air - N.C.
Inlet port 1
Outlet port 2
Exhaust port 3

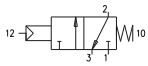

For compressed air - N.O.
Inlet port 3
Outlet port 2
Outlet port 1

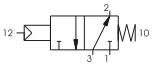

Weight 360 g
Attention: for the Normally open version, connect the inlet port to the exhaust port No "3".

Solenoid - Spring

Coding: 779.32.0.Ⓕ.M2

Operational characteristics	
Fluid	Filtered air. No lubrication needed, if applied it shall be continuous
Max working pressure (bar)	10
Minimum piloting pressure (bar)	2,5 (External pilot version) 3 (Internal pilo version)
Temperature °C	-10 ÷ +50
Flow rate at 6 bar with Δp=1 (Nl/min)	1800
Orifice size (mm)	10
Working ports size	G3/8"
Pilot ports size	G1/8"

	FUNCTION
Ⓕ	**1AC** = Internal pilot normally closed
	1C = External pilot normally closed
	1AA = Internal pilot normally open
	1A = External pilot normally open

Internal pilot - N.C.
Inlet port 1
Outlet port 2
Exhaust port 3

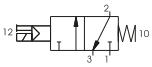

Internal pilot - N.O.
Inlet port 3
Outlet port 2
Outlet port 1

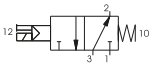

External pilot - N.C.
Inlet port 1
Outlet port 2
Exhaust port 3

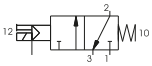

External pilot - N.O.
Inlet port 3
Outlet port 2
Outlet port 1

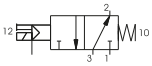

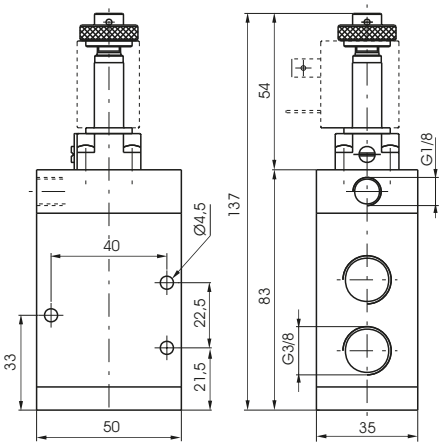

Weight 420 g

Overall dimensions and technical information are provided solely for informative purposes and may be modified without notice

Pneumatic - Spring

Coding: 779/V.32.11.Ⓕ

Operational characteristics	
Fluid	Vacuum
Minimum piloting pressure (bar)	2
Temperature °C	-10 ÷ +70
Orifice size (mm)	10
Working ports size	G3/8"
Pilot ports size	G1/8"

Ⓕ	FUNCTION
	1C = Normally Closed
	1A = Normally Open

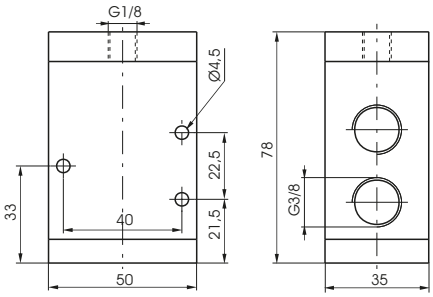

Weight 360 g

For vacuum - N.O.
Outlet port 1
Outlet port 2
Pump 3

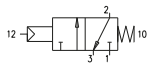

For vacuum - N.C.
Exhaust port 3
Outlet port 2
Pump 1

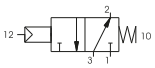

Solenoid-Spring - Internal pilot

Coding: 779/V.32.0.Ⓕ.M2/V

Operational characteristics	
Fluid	Vacuum
Temperature °C	-10 ÷ +50
Orifice size (mm)	10
Working ports size	G3/8"
Pilot ports size	G1/8"

Ⓕ	FUNCTION
	1AA = Normally Open
	1AC = Normally Closed

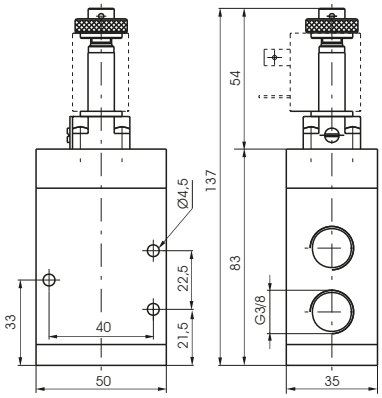

Weight 420 g

For vacuum - N.O.
Outlet port 1
Outlet port 2
Pump 3

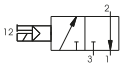

For vacuum - N.C.
Exhaust port 3
Outlet port 2
Pump 1

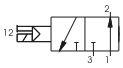

Solenoid-Spring - External pilot

Coding: 779/V.32.0.Ⓕ.M2

Operational characteristics	
Fluid	Vacuum
Minimum piloting pressure (bar)	2
Temperature °C	-10 ÷ +50
Orifice size (mm)	10
Working ports size	G3/8"
Pilot ports size	G1/8"

Ⓕ	FUNCTION
	1A = Normally Open
	1C = Normally Closed

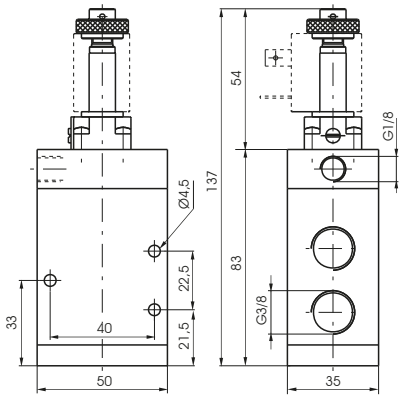

Weight 420 g

For vacuum - N.O.
Outlet port 1
Outlet port 2
Pump 3

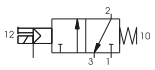

For vacuum - N.C.
Exhaust port 3
Outlet port 2
Pump 1

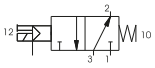

Overall dimensions and technical information are provided solely for informative purposes and may be modified without notice

Pneumatic - Spring

Coding: 772.32.11.1C

Operational characteristics	
Fluid	Filtered air. No lubrication needed, if applied it shall be continuous
Max working pressure (bar)	10
Minimum piloting pressure (bar)	2,5
Temperature °C	-5 ÷ +70
Flow rate at 6 bar with Δp=1 (Nl/min)	4800
Orifice size (mm)	15
Working ports size	G1/2"
Pilot ports size	G1/8"

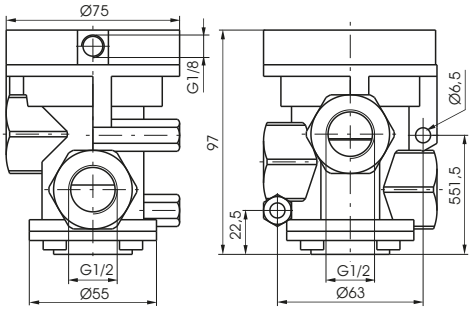

Weight 1100 g
Normally Closed

For compressed air - N.C.
Inlet port 1
Outlet port 2
Exhaust port 3

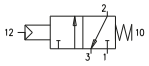

Solenoid - Spring

Coding: 772.32.0.Ⓕ.M2

Operational characteristics	
Fluid	Filtered air. No lubrication needed, if applied it shall be continuous
Max working pressure (bar)	10
Minimum piloting pressure (bar)	2,5 (External pilot version) 3 (Internal pilo version)
Temperature °C	-5 ÷ +50
Flow rate at 6 bar with Δp=1 (Nl/min)	4800
Orifice size (mm)	15
Working ports size	G1/2"
Pilot ports size	G1/8"

	FUNCTION
Ⓕ	**1AC** = Internal pilot normally closed
	1C = External pilot normally closed

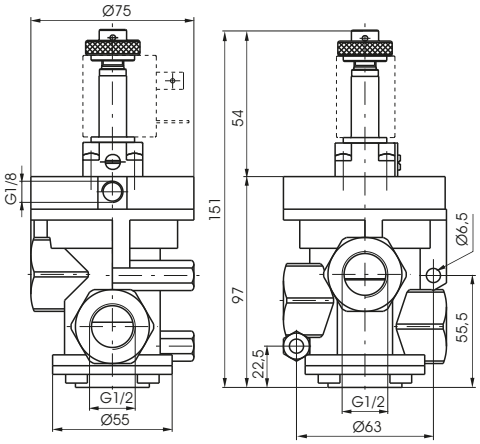

Weight 1160 g

Internal pilot - N.C.
Inlet port 1
Outlet port 2
Exhaust port 3

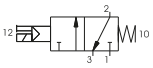

External pilot - N.C.
Inlet port 1
Outlet port 2
Exhaust port 3

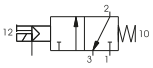

Pneumatic - Spring

Coding: 772/V.32.11.Ⓕ

Operational characteristics	
Fluid	Vacuum
Minimum piloting pressure (bar)	2
Temperature °C	-5 ÷ +70
Orifice size (mm)	15
Working ports size	G1/2"
Pilot ports size	G1/8"

Ⓕ	FUNCTION
	1C = Normally Closed
	1A = Normally Open

Weight 1100 g

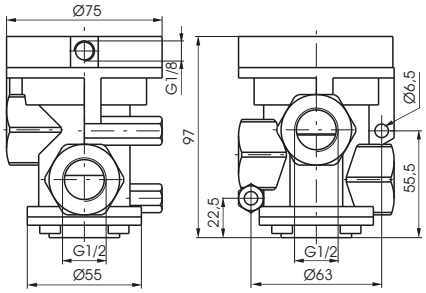

For vacuum - N.O.
Outlet port 1
Outlet port 2
Pump 3

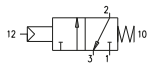

For vacuum - N.C.
Exhaust port 3
Outlet port 2
Pump 1

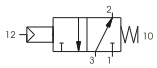

Solenoid-Spring - Internal pilot

Coding: 772/V.32.0.Ⓕ.M2/V

Operational characteristics	
Fluid	Vacuum
Temperature °C	-5 ÷ +50
Orifice size (mm)	15
Working ports size	G1/2"
Pilot ports size	G1/8"

Ⓕ	FUNCTION	
	1AA =	Normally Open
	1AC =	Normally Closed

Weight 1160 g

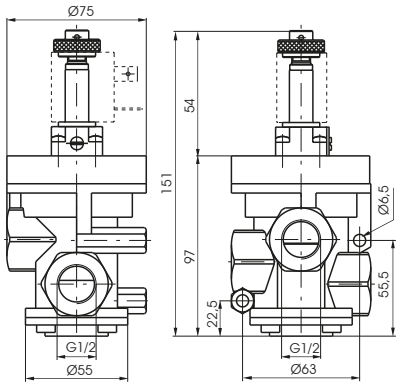

For vacuum - N.O.
Outlet port 1
Outlet port 2
Pump 3

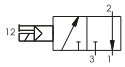

For vacuum - N.C.
Exhaust port 3
Outlet port 2
Pump 1

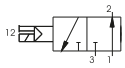

Solenoid-Spring - External pilot

Coding: 772/V.32.0.Ⓕ.M2

Operational characteristics	
Fluid	Vacuum
Minimum piloting pressure (bar)	2
Temperature °C	-5 ÷ +50
Orifice size (mm)	15
Working ports size	G1/2"
Pilot ports size	G1/8"

Ⓕ	FUNCTION
	1A = Normally Open
	1C = Normally Closed

Weight 1160 g

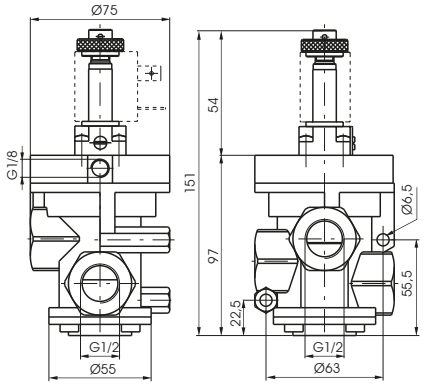

For vacuum - N.O.
Outlet port 1
Outlet port 2
Pump 3

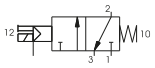

For vacuum - N.C.
Exhaust port 3
Outlet port 2
Pump 1

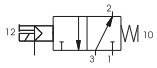

Overall dimensions and technical information are provided solely for informative purposes and may be modified without notice

Pneumatic - Spring

Coding: 773.32.11.1C

Operational characteristics	
Fluid	Filtered air. No lubrication needed, if applied it shall be continuous
Max working pressure (bar)	10
Minimum piloting pressure (bar)	2,5 bar
Temperature °C	-5 ÷ +70
Flow rate at 6 bar with Δp=1 (Nl/min)	7000
Orifice size (mm)	20
Working ports size	G3/4"
Pilot ports size	G1/8"

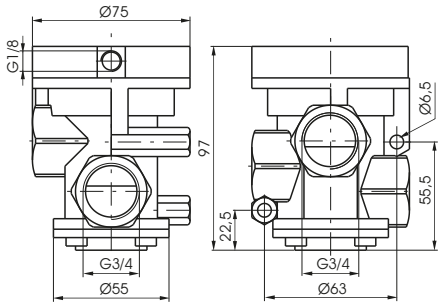

Weight 990 g
Normally Closed

For compressed air - N.C.
Inlet port 1
Outlet port 2
Exhaust port 3

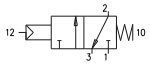

Solenoid - Spring

Coding: 773.32.0.Ⓕ.M2

Operational characteristics	
Fluid	Filtered air. No lubrication needed, if applied it shall be continuous
Max working pressure (bar)	10
Minimum piloting pressure (bar)	2,5 (External pilot version) 3 (Internal pilo version)
Temperature °C	-5 ÷ +50
Flow rate at 6 bar with Δp=1 (Nl/min)	7000
Orifice size (mm)	20
Working ports size	G3/4"
Pilot ports size	G1/8"

	FUNCTION
Ⓕ	**1AC** = Internal pilot normally closed
	1C = External pilot normally closed

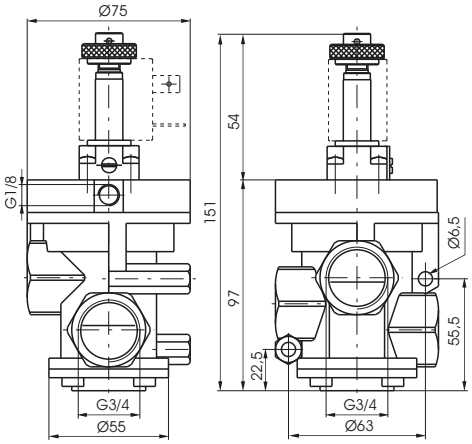

Weight 1050 g

Internal pilot - N.C.
Inlet port 1
Outlet port 2
Exhaust port 3

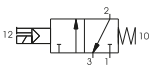

External pilot - N.C.
Inlet port 1
Outlet port 2
Exhaust port 3

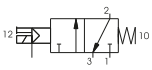

Pneumatic - Spring

Coding: 773/V.32.11.Ⓕ

Operational characteristics	
Fluid	Vacuum
Minimum piloting pressure (bar)	2
Temperature °C	-5 ÷ +70
Orifice size (mm)	20
Working ports size	G3/4"
Pilot ports size	G1/8"

Ⓕ	FUNCTION
	1C = Normally Closed
	1A = Normally Open

Weight 990 g

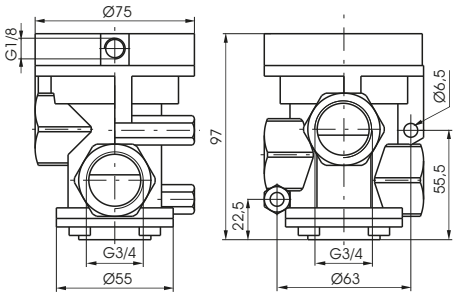

For vacuum - N.O.
Outlet port 1
Outlet port 2
Pump 3

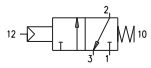

For vacuum - N.C.
Exhaust port 3
Outlet port 2
Pump 1

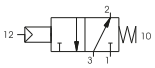

Solenoid-Spring - Internal pilot

Coding: 773/V.32.0.Ⓕ.M2/V

Operational characteristics	
Fluid	Vacuum
Temperature °C	-5 ÷ +50
Orifice size (mm)	20
Working ports size	G3/4"
Pilot ports size	G1/8"

Ⓕ	FUNCTION	
	1AA =	Normally Open
	1AC =	Normally Closed

Weight 1050 g

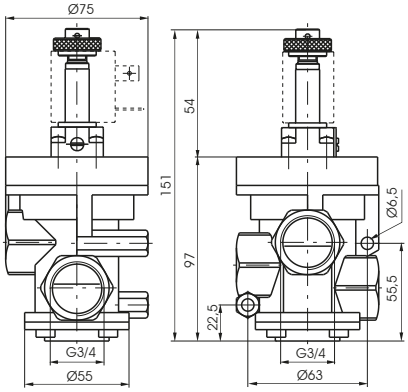

For vacuum - N.O.
Exhaust port 3
Outlet port 2
Pump 1

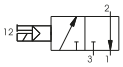

For vacuum - N.C.
Outlet port 1
Outlet port 2
Pump 3

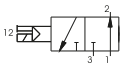

Solenoid-Spring - External pilot

Coding: 773/V.32.0.Ⓕ.M2

Operational characteristics	
Fluid	Vacuum
Minimum piloting pressure (bar)	2
Temperature °C	-5 ÷ +50
Orifice size (mm)	20
Working ports size	G3/4"
Pilot ports size	G1/8"

Ⓕ	FUNCTION
	1A = Normally Open
	1C = Normally Closed

Weight 1050 g

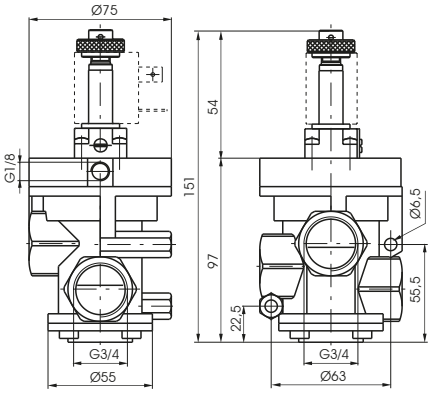

For vacuum - N.O.
Outlet port 1
Outlet port 2
Pump 3

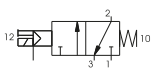

For vacuum - N.C.
Exhaust port 3
Outlet port 2
Pump 1

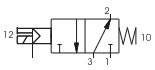

Overall dimensions and technical information are provided solely for informative purposes and may be modified without notice

Pneumatic - Spring

Coding: 771.32.11.1C

Operational characteristics	
Fluid	Filtered air. No lubrication needed, if applied it shall be continuous
Max working pressure (bar)	10
Minimum piloting pressure (bar)	2,5
Temperature °C	-5 ÷ +70
Flow rate at 6 bar with Δp=1 (Nl/min)	12500
Orifice size (mm)	25
Working ports size	G1"
Pilot ports size	G1/8"

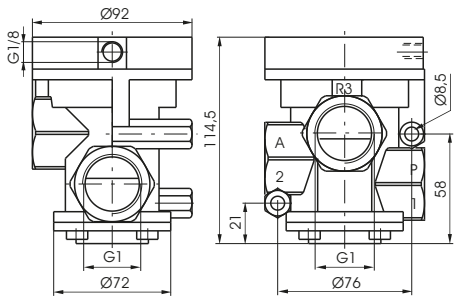

Weight 1060 g
Normally Closed

For compressed air - N.C.
Inlet port 1
Outlet port 2
Exhaust port 3

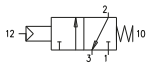

Solenoid - Spring

Coding: 771.32.0.Ⓕ.M2

Operational characteristics	
Fluid	Filtered air. No lubrication needed, if applied it shall be continuous
Max working pressure (bar)	10
Minimum piloting pressure (bar)	2,5 (External pilot version) 3 (Internal pilo version)
Temperature °C	-5 ÷ +50
Flow rate at 6 bar with Δp=1 (Nl/min)	12500
Orifice size (mm)	25
Working ports size	G1"
Pilot ports size	G1/8"

	FUNCTION
Ⓕ	**1AC** = Internal pilot normally closed
	1C = External pilot normally closed

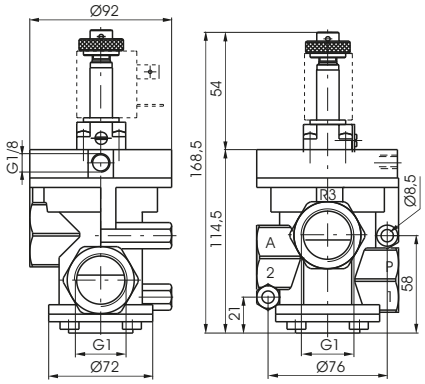

Weight 1120 g

Internal pilot - N.C.
Inlet port 1
Outlet port 2
Exhaust port 3

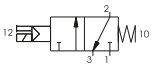

External pilot - N.C.
Inlet port 1
Outlet port 2
Exhaust port 3

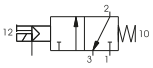

Pneumatic - Spring

Coding: 771/V.32.11.Ⓕ

Operational characteristics	
Fluid	Vacuum
Minimum piloting pressure (bar)	2
Temperature °C	-5 ÷ +70
Orifice size (mm)	25
Working ports size	G1"
Pilot ports size	G1/8"

Ⓕ	FUNCTION
	1C = Normally Closed
	1A = Normally Open

Weight 1060 g

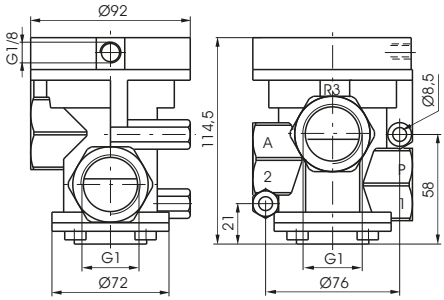

For vacuum - N.O.
Outlet port 1
Outlet port 2
Pump 3

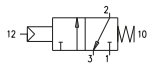

For vacuum - N.C.
Exhaust port 3
Outlet port 2
Pump 1

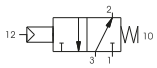

Solenoid-Spring - Internal pilot

Coding: 771/V.32.0.Ⓕ.M2/V

Operational characteristics	
Fluid	Vacuum
Temperature °C	-5 ÷ +50
Orifice size (mm)	25
Working ports size	G1"
Pilot ports size	G1/8"

Ⓕ	FUNCTION
	1AA = Normally Open
	1AC = Normally Closed

Weight 1120 g

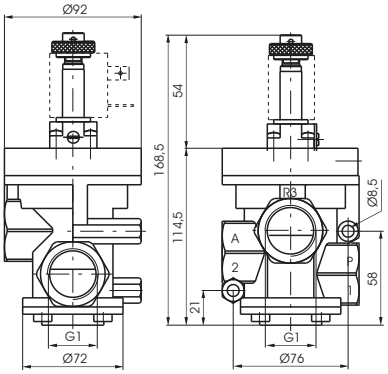

For vacuum - N.O.
Exhaust port 3
Outlet port 2
Pump 1

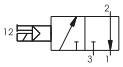

For vacuum - N.C.
Outlet port 1
Outlet port 2
Pump 3

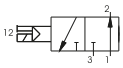

Solenoid-Spring - External pilot

Coding: 771/V.32.0.Ⓕ.M2

Operational characteristics	
Fluid	Vacuum
Minimum piloting pressure (bar)	2
Temperature °C	-5 ÷ +50
Orifice size (mm)	25
Working ports size	G1"
Pilot ports size	G1/8"

Ⓕ	FUNCTION
	1A = Normally Open
	1C = Normally Closed

Weight 1120 g

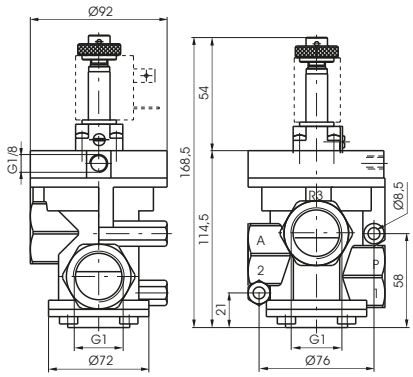

For vacuum - N.O.
Outlet port 1
Outlet port 2
Pump 3

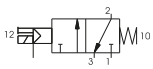

For vacuum - N.C.
Exhaust port 3
Outlet port 2
Pump 1

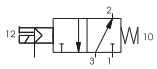

Overall dimensions and technical information are provided solely for informative purposes and may be modified without notice

Pneumatic - Spring

Coding: 776.22.11.1C

Operational characteristics	
Fluid	Filtered air. No lubrication needed, if applied it shall be continuous
Max working pressure (bar)	10
Minimum piloting pressure (bar)	2,5
Temperature °C	-5 ÷ +70
Flow rate at 6 bar with Δp=1 (Nl/min)	33500
Orifice size (mm)	38
Working ports size	G1 1/2"
Pilot ports size	G1/8"

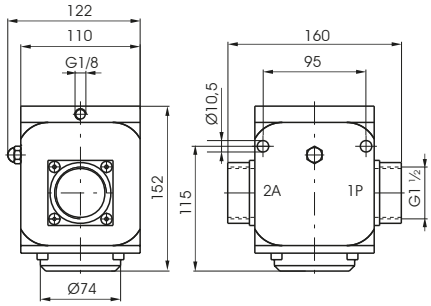

Weight 3950 g
Normally Closed

For compressed air - N.C.
Inlet port 1
Outlet port 2

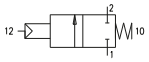

Solenoid - Spring

Coding: 776.22.0.Ⓕ.Ⓢ

Operational characteristics	
Fluid	Filtered air. No lubrication needed, if applied it shall be continuous
Max working pressure (bar)	10
Minimum piloting pressure (bar)	2,5 (External pilot version) 3 (Internal pilo version)
Temperature °C	-5 ÷ +50
Flow rate at 6 bar with Δp=1 (Nl/min)	33500
Orifice size (mm)	38
Working ports size	G1 1/2"
Pilot ports size	G1/8"

Ⓕ	FUNCTION
	1AC = Internal pilot normally closed
	1C = External pilot normally closed
Ⓢ	SOLENOID CODE
	SEE SOLENOID VALVES "S" TYPE, SERIES 300

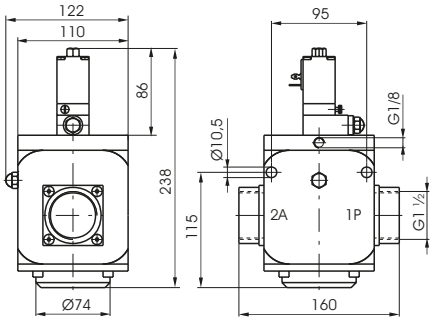

Weight 4450 g

Internal pilot - N.C.
Inlet port 1
Outlet port 2

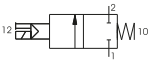

External pilot - N.C.
Inlet port 1
Outlet port 2

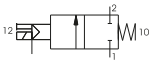

Pneumatic - Spring

Coding: 776.32.11.1C

Operational characteristics	
Fluid	Filtered air. No lubrication needed, if applied it shall be continuous
Max working pressure (bar)	10
Minimum piloting pressure (bar)	2,5
Temperature °C	-5 ÷ +70
Flow rate at 6 bar with Δp=1 (Nl/min)	33500
Orifice size (mm)	38
Working ports size	G1 1/2"
Pilot ports size	G1/8"

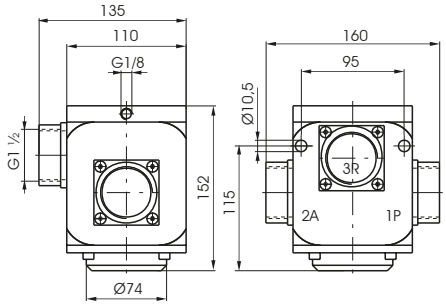

Weight 3900 g
Normally Closed

For compressed air - N.C.
Inlet port 1
Outlet port 2
Exhaust port 3

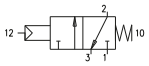

Solenoid - Spring

Coding: 776.32.0.Ⓕ.Ⓢ

Operational characteristics	
Fluid	Filtered air. No lubrication needed, if applied it shall be continuous
Max working pressure (bar)	10
Minimum piloting pressure (bar)	2,5 (External pilot version) 3 (Internal pilo version)
Temperature °C	-5 ÷ +50
Flow rate at 6 bar with Δp=1 (Nl/min)	33500
Orifice size (mm)	38
Working ports size	G1 1/2"
Pilot ports size	G1/8"

Ⓕ	FUNCTION
	1AC = Internal pilot normally closed
	1C = External pilot normally closed
Ⓢ	SOLENOID CODE
	SEE SOLENOID VALVES "S" TYPE, SERIES 300

Weight 4450 g

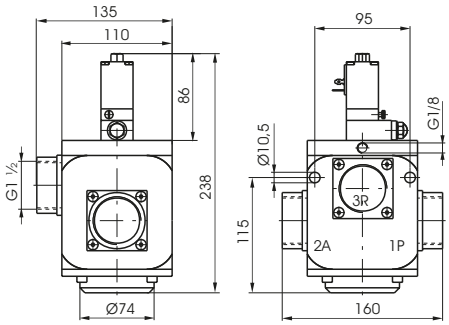

Internal pilot - N.C.
Inlet port 1
Outlet port 2
Exhaust port 3

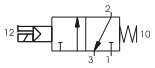

External pilot - N.C.
Inlet port 1
Outlet port 2
Exhaust port 3

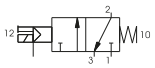

Overall dimensions and technical information are provided solely for informative purposes and may be modified without notice

Pneumatic - Spring

Coding: 776/V.22.11.1C

Operational characteristics	
Fluid	Vacuum
Minimum piloting pressure (bar)	2
Temperature °C	-5 ÷ +70
Orifice size (mm)	38
Working ports size	G1 1/2"
Pilot ports size	G1/8"

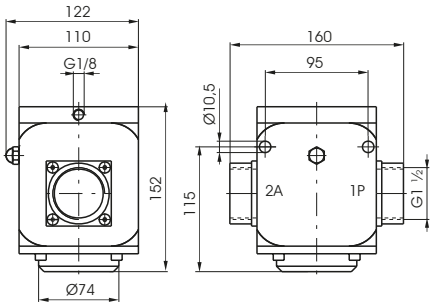

Weight 3950 g
Normally Closed

For vacuum - N.C.
Outlet port 2
Pump 1

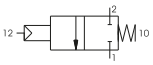

Solenoid - Spring

Coding: 776/V.22.0.1C.Ⓢ

Operational characteristics	
Fluid	Vacuum
Minimum piloting pressure (bar)	2
Temperature °C	-5 ÷ +50
Orifice size (mm)	38
Working ports size	G1 1/2"
Pilot ports size	G1/8"

	SOLENOID CODE
Ⓢ	**SEE SOLENOID VALVES "S" TYPE, SERIES 300**

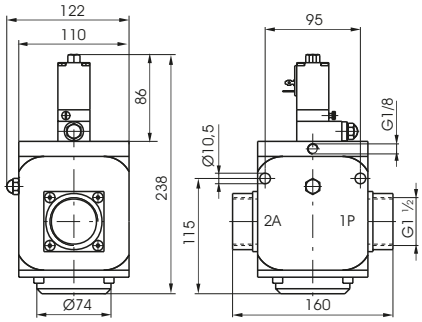

Weight 4450 g
External pilot normally closed

For vacuum - N.C.
Outlet port 2
Pump 1

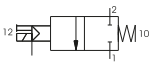

Pneumatic - Spring

Coding: 776/V.32.11.Ⓕ

Operational characteristics	
Fluid	Vacuum
Minimum piloting pressure (bar)	2
Temperature °C	-5 ÷ +70
Orifice size (mm)	38
Working ports size	G1 1/2"
Pilot ports size	G1/8"

	FUNCTION
Ⓕ	**1C** = Normally Closed
	1A = Normally Open

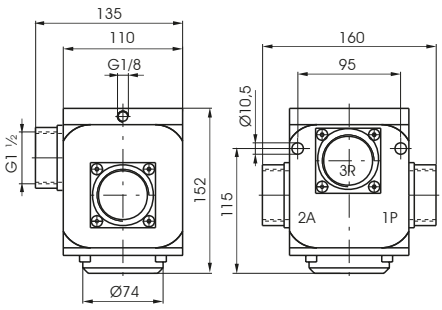

Weight 3900 g

For vacuum - N.O.
Outlet port 1
Outlet port 2
Pump 3

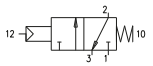

For vacuum - N.C.
Exhaust port 3
Outlet port 2
Pump 1

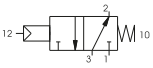

Solenoid - Spring

Coding: 776/V.32.0.Ⓕ.Ⓢ

Operational characteristics	
Fluid	Vacuum
Minimum piloting pressure (bar)	2
Temperature °C	-5 ÷ +50
Orifice size (mm)	38
Working ports size	G1 1/2"
Pilot ports size	G1/8"

Ⓕ	FUNCTION
	1C = External pilot normally closed
	1A = External pilot normally open
Ⓢ	SOLENOID CODE
	SEE SOLENOID VALVES "S" TYPE, SERIES 300

Weight 4500 g

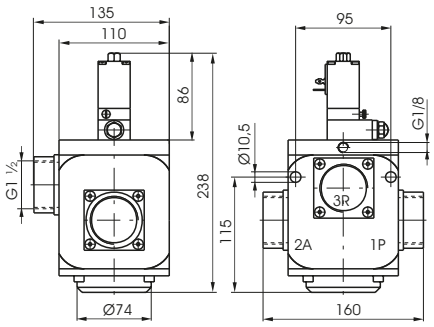

For vacuum - N.O.
Outlet port 1
Outlet port 2
Pump 3

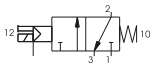

For vacuum - N.C.
Exhaust port 3
Outlet port 2
Pump 1

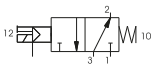

Overall dimensions and technical information are provided solely for informative purposes and may be modified without notice

Series N776 - For compressed air and vacuum - G1 1/2"

General

The N776 G1.1/2" series of valves and solenoid operated poppet valves is the result of the technical evolution of the 776 series.
A rolling diaphragm construction has replaced the previously used piston design ensure lower frictions and longer life.
Connection 3 is isolated via a dedicated seal which allow to have the N.O. version as well as the self feed for vacuum which was not available on the 776 series.
The pilot valves are the M3R (CNOMO Stile) with bistable manual override.
Coils are not included and have to be ordered separately (see 300 series, 22mm MB coils and 30mm CNOMO MC coils).
Coils homologated are also available. (See series 300).

Construction characteristics

Springs	Stainless steel
Pistons	Aluminium (for Air) - Acetylic resin (for Vacuum)
Pin guide	Stainless steel
Diaphragm	NBR oil resistant rubber
Body, operator and end cover	Die-cast aluminium
Seals and poppets	NBR

Use and maintenance

These valves have a mean life of 10 to 15 million cycles under normal operating conditions.
Lubrication is not required for good operation but we recommend good filtration to avoid dirty deposit causing malfunction.
Please ensure that the valve is being used according with the manufacturers specification, such as air pressure and temperature.
The exhaust port of the distributor has to be protected in a dusty and dirty environment.
For these products, according to the construction technique and special application, is not required any maintenance with parts replacement.
When necessary it is sufficient to clean the internal parts.
When it is used the solenoid valves with internal pilot, either for air or vacuum, inlet flow rate must be equal or higher that the required consumption flow rate.
Otherwise is better choose the external pilot version.

Minumum working pressure diagram

for external pilot versions N.C. & N.O.

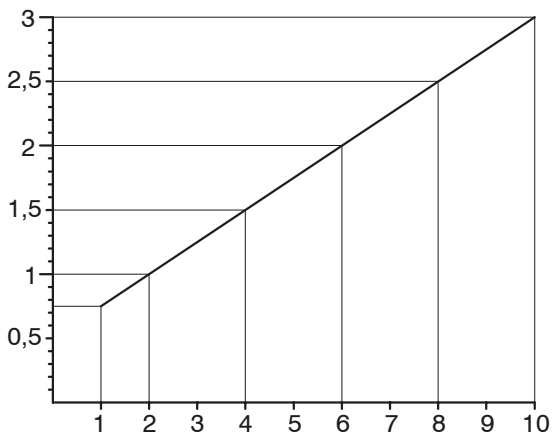

Pneumatic - Spring

Coding: N776.22.11.1C

Operational characteristics	
Fluid	Filtered air. No lubrication needed, if applied it shall be continuous
Max working pressure (bar)	10
Minimum piloting pressure (bar)	See diagram at general page
Temperature °C	-5 ÷ +70
Flow rate at 6 bar with Δp=1 (Nl/min)	33500
Orifice size (mm)	38
Working ports size	G 1 1/2"
Pilot ports size	G1/8"

Weight 3560 g
Normally Closed

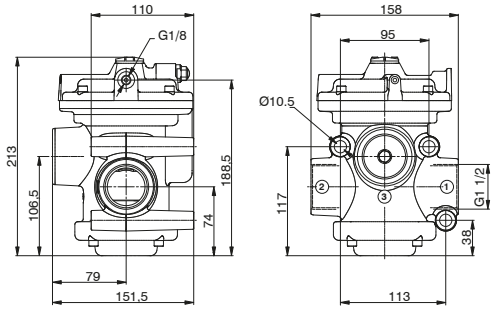

For compressed air - N.C.
Inlet port 1
Outlet port 2

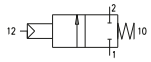

Solenoid - Spring

Coding: N776.22.0.❶.M3R

Operational characteristics	
Fluid	Filtered air. No lubrication needed, if applied it shall be continuous
Max working pressure (bar)	10
Minimum piloting pressure (bar)	See diagram at general page (External pilot version) 3,5 (Internal pilot version)
Temperature °C	-5 ÷ +50
Flow rate at 6 bar with Δp=1 (Nl/min)	33500
Orifice size (mm)	38
Working ports size	G 1 1/2"
Pilot ports size	G1/8"

	FUNCTION
❶	**1AC** = Internal pilot normally closed
	1C = External pilot normally closed

Weight 3620 g

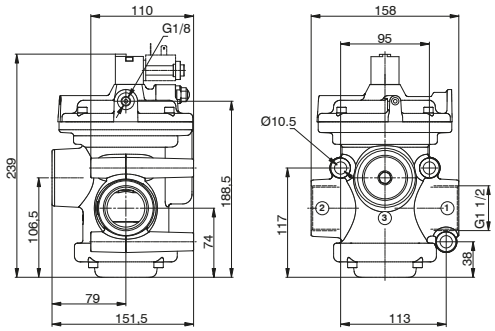

Internal pilot - N.C.
Inlet port 1
Outlet port 2

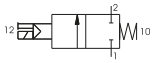

External pilot - N.C.
Inlet port 1
Outlet port 2

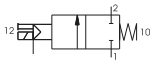

Pneumatic - Spring

Coding: N776.32.11.1

Operational characteristics	
Fluid	Filtered air. No lubrication needed, if applied it shall be continuous
Max working pressure (bar)	10
Minimum piloting pressure (bar)	See diagram at general page
Temperature °C	-5 ÷ +70
Flow rate at 6 bar with Δp=1 (Nl/min)	33500
Orifice size (mm)	38
Working ports size	G 1 1/2"
Pilot ports size	G1/8"

Weight 3550 g
Normally closed/Normally open

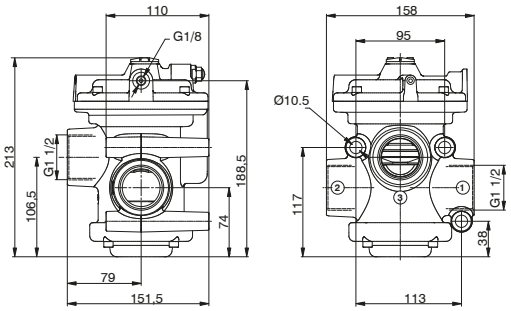

For compressed air - N.C.
Inlet port 1
Outlet port 2
Exhaust port 3

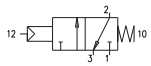

For compressed air - N.O.
Inlet port 3
Outlet port 2
Outlet port 1

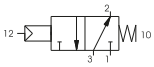

Overall dimensions and technical information are provided solely for informative purposes and may be modified without notice

Solenoid - Spring

Coding: N776.32.0.Ⓕ.M3R

Operational characteristics	
Fluid	Filtered air. No lubrication needed, if applied it shall be continuous
Max working pressure (bar)	10
Minimum piloting pressure (bar)	See diagram at general page (External pilot version) 3,5 (Internal pilot version)
Temperature °C	-5 ÷ +50
Flow rate at 6 bar with Δp=1 (Nl/min)	33500
Orifice size (mm)	38
Working ports size	G 1 1/2"
Pilot ports size	G1/8"

	FUNCTION
Ⓕ	**1AC** = Internal pilot normally closed
	1AA = Internal pilot normally open
	1 = External pilot Normally closed- Normally open

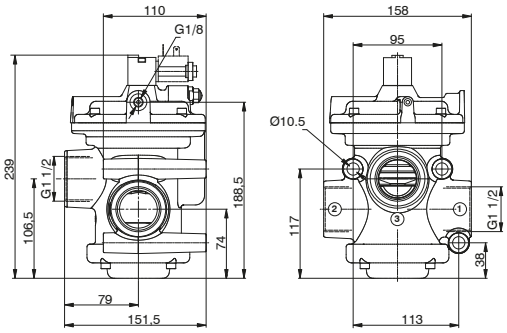

Weight 3610 g

Internal pilot - N.C.
Inlet port 1
Outlet port 2
Exhaust port 3

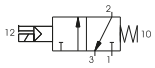

Internal pilot - N.O.
Inlet port 3
Outlet port 2
Outlet port 1

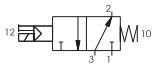

External pilot for compressed air - N.C. - N.O.
Inlet port 1 (N.C.) or 3 (N.O.)
Outlet 2 (N.C. & N.O.)
Exhaust 3 (N.C.) or 1 (N.O.)

1

AIR DISTRIBUTION

Pneumatic - Spring

Coding: N776/V.22.11.1C

Operational characteristics	
Fluid	Vacuum
Minimum piloting pressure (bar)	2
Temperature °C	-5 ÷ +70
Orifice size (mm)	38
Working ports size	G 1 1/2"
Pilot ports size	G1/8"

Weight 3178 g
Normally Closed

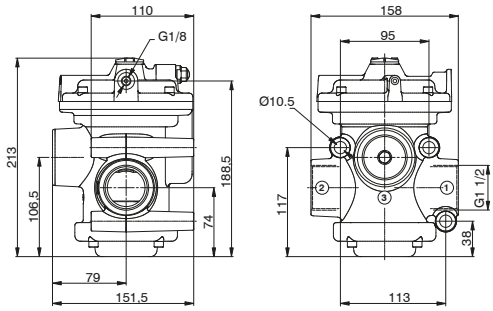

For vacuum - N.C.
Outlet port 2
Pump 1

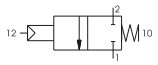

Solenoid - Spring

Coding: N776/V.22.0.Ⓕ.M3R

Operational characteristics	
Fluid	Vacuum
Minimum piloting pressure (bar)	2 (External pilot version)
Temperature °C	-5 ÷ +50
Orifice size (mm)	38
Working ports size	G 1 1/2"
Pilot ports size	G1/8"

Ⓕ	FUNCTION
	1AC = Internal pilot normally closed
	1C = External pilot normally closed

Weight 3238 g

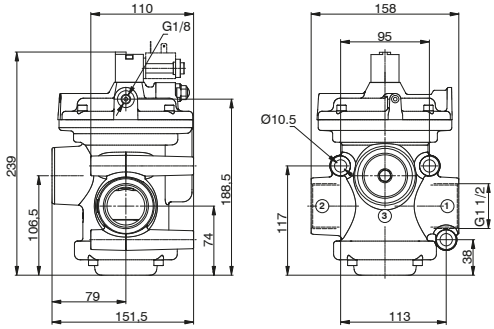

Internal pilot for vacuum - N.C.
Outlet port 2
Pump 1

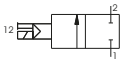

External pilot for vacuum - N.C.
Outlet port 2
Pump 1

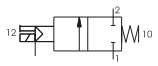

Pneumatic - Spring

Coding: N776/V.32.11.1

Operational characteristics	
Fluid	Vacuum
Minimum piloting pressure (bar)	2
Temperature °C	-5 ÷ +70
Orifice size (mm)	38
Working ports size	G 1 1/2"
Pilot ports size	G1/8"

Weight 3168 g
Normally closed/Normally open

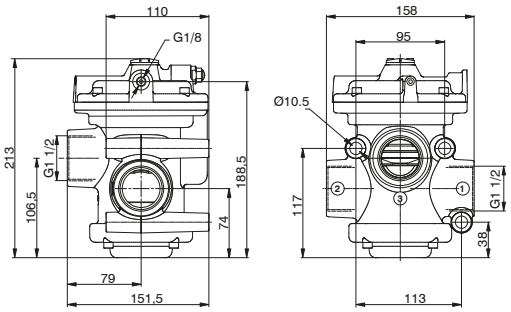

For vacuum - N.O.
Outlet port 1
Outlet port 2
Pump 3

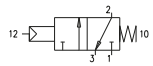

For vacuum - N.C.
Exhaust port 3
Outlet port 2
Pump 1

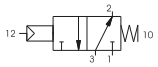

Overall dimensions and technical information are provided solely for informative purposes and may be modified without notice

Solenoid - Spring

Coding: N776/V.32.0.Ⓕ.M3R

Operational characteristics	
Fluid	Vacuum
Minimum piloting pressure (bar)	2 (External pilot version)
Temperature °C	-5 ÷ +50
Orifice size (mm)	38
Working ports size	G 1 1/2"
Pilot ports size	G1/8"

	FUNCTION
Ⓕ	**1AC** = Internal pilot normally closed
	1AA = Internal pilot normally open
	1 = External pilot Normally closed- Normally open

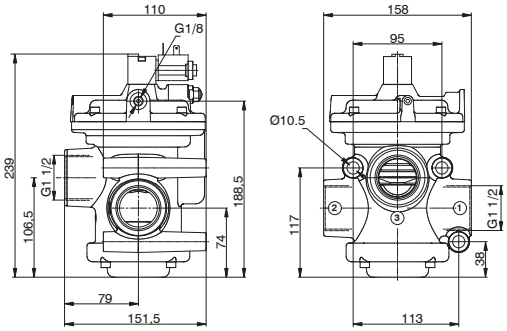

Weight 3228 g

Internal pilot for vacuum - N.C.
Exhaust port 3
Outlet port 2
Pump 1

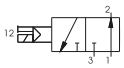

Internal pilot for vacuum - N.O.
Outlet port 1
Outlet port 2
Pump 3

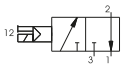

External pilot for vacuum - N.C. - N.O.
Exhaust 3 (N.C.) or (N.O.)
Outlet 2 (N.C. & N.O.)
Pump 1 (N.C.) & 3 (N.O.)

Series T772-773 - for compressed air and vacuum in technopolymer - G1/2" & G3/4"

General

The range of G1/2" and G3/4" pilot and solenoid operated poppet valves are manufactured with high impact resistant thermoplastic.
The use of this materiel results in a versatile, lightweight and economical valve.
The traditional piston lip seal has been replaced with a rolling diaphragm, thereby eliminating frictional wear and tear to this seal.
The valves (with the exception of certain vacuum models) also features a seal, which separates port 3 from the piston head. The inclusion of this seal has enhanced the valve's performance and allows the valve to be used as normally open (a configuration not possible in the Zama series).
Solenoid operated valves (both internal and external pilot versions) are fitted with a quick exhaust unit, which reduces the return stroke operating time by 60%.
The bulk of the valves in this series use the MP type operator, the exception being internally piloted vacuum models, which use the MV operator. These operators differ from the M2 type in that they have self-tapping mounting screws for use in plastics.
The ordering code are referring to the solenoid valves with mechanics "MP" or "MV" assembled.
Coils are not included and have to be ordered separately (series 300, Section 1, General Catalogue), with the exception of the bistable versions which already include 24V DC Coils (N331.0A).
Coils homologated are also available. (See series 300).

Construction characteristics

Springs	AISI 302 stainless steel
Diaphragm	Oil resistant rubber (NBR)
Body, operator and end cover	High impact resistant thermoplastic
Seals and poppets	NBR
Piston and shaft	Acetal resin

Use and maintenance

These valves have a mean life of 10 to 15 million cycles under normal operating conditions.
Lubrication is not required for good operation but we recommend good filtration to avoid dirty deposit causing malfunction.
Please ensure that the valve is being used according with the manufacturers specification, such as air pressure and temperature.
The exhaust port of the distributor has to be protected in a dusty and dirty environment.
For these products, according to the construction technique and special application, is not required any maintenance with parts replacement.
When necessary it is sufficient to clean the internal parts.
When it is used the solenoid valves with internal pilot, either for air or vacuum, inlet flow rate must be equal or higher that the required consumption flow rate.
Otherwise is better choose the external pilot version.

MINIMUM PILOTING PRESSURE DIAGRAM (Valves for compressed air)
PNEUMATIC/SPRING AND EXTERNAL SOLENOID PILOT VERSION

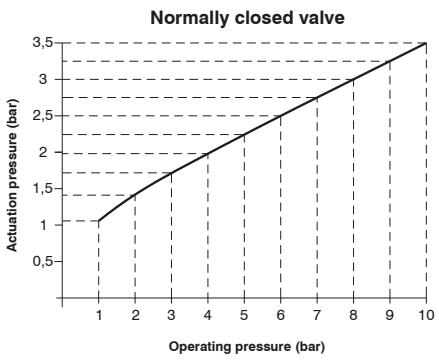

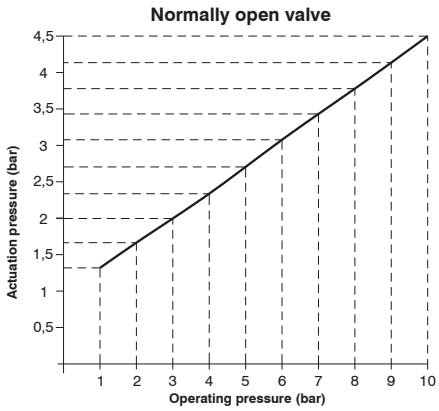

Overall dimensions and technical information are provided solely for informative purposes and may be modified without notice

Pneumatic - Spring

Coding: T772.32.11.1

Operational characteristics	
Fluid	Filtered air. No lubrication needed, if applied it shall be continuous
Max working pressure (bar)	10
Minimum piloting pressure (bar)	See diagram at general page
Temperature °C	-5 ÷ +50
Flow rate at 6 bar with Δp=1 (Nl/min)	4100
Orifice size (mm)	15
Working ports size	G1/2"
Pilot ports size	G1/8"

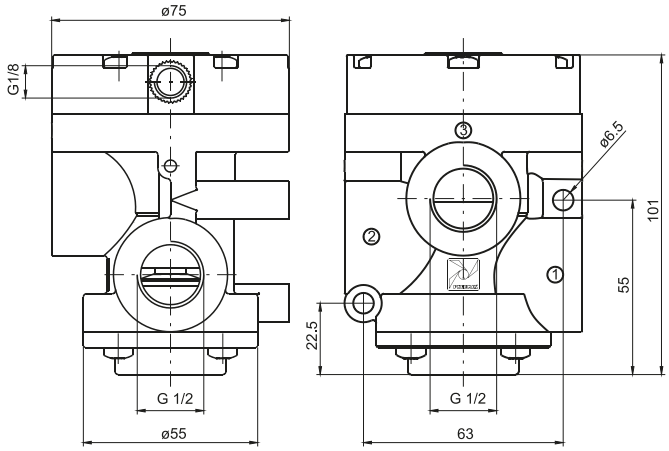

Weight 350 g

For compressed air - N.C.
Inlet port 1
Outlet port 2
Exhaust port 3

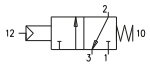

For compressed air - N.O.
Inlet port 3
Outlet port 2
Outlet port 1

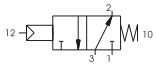

Solenoid-Spring - Internal pilot

Coding: T772.32.0.Ⓕ.MP

Operational characteristics	
Fluid	Filtered air. No lubrication needed, if applied it shall be continuous
Max working pressure (bar)	10
Minimum piloting pressure (bar)	2,5
Temperature °C	-5 ÷ +50
Flow rate at 6 bar with Δp=1 (Nl/min)	4100
Orifice size (mm)	15
Working ports size	G1/2"
Pilot ports size	G1/8"

	FUNCTION		
Ⓕ	1AA	=	Normally Open
	1AC	=	Normally Closed

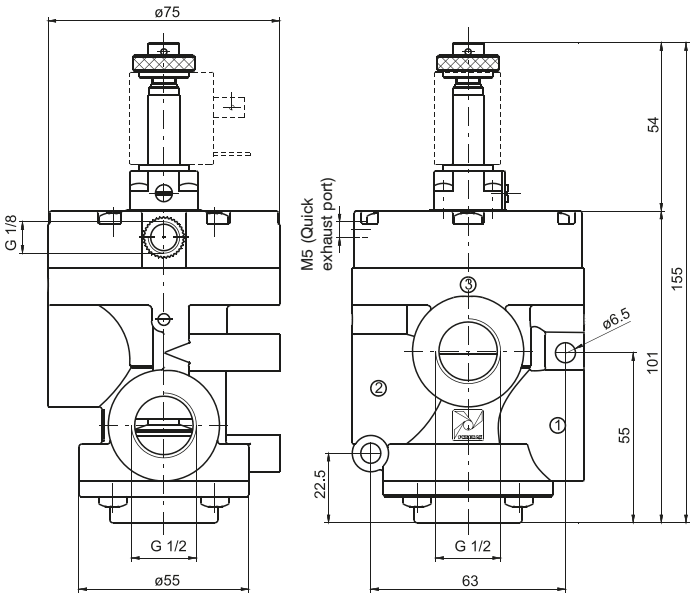

Weight 390 g

For compressed air - N.C.
Inlet port 1
Outlet port 2
Exhaust port 3

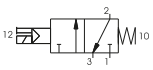

For compressed air - N.O.
Inlet port 3
Outlet port 2
Outlet port 1

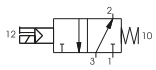

Solenoid-Spring - External pilot

Coding: T772.32.0.1.MP

Operational characteristics	
Fluid	Filtered air. No lubrication needed, if applied it shall be continuous
Max working pressure (bar)	10
Minimum piloting pressure (bar)	See diagram at general page
Temperature °C	-5 ÷ +50
Flow rate at 6 bar with Δp=1 (Nl/min)	4100
Orifice size (mm)	15
Working ports size	G1/2"
Pilot ports size	G1/8"

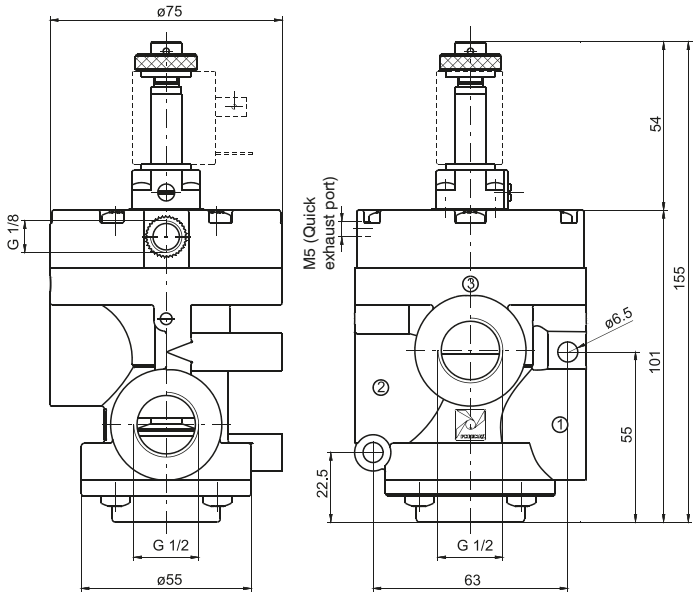

Weight 390 g

For compressed air - N.C.
Inlet port 1
Outlet port 2
Exhaust port 3

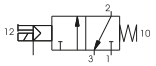

For compressed air - N.O.
Inlet port 3
Outlet port 2
Outlet port 1

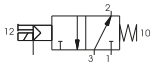

Solenoid-Spring - Internal pilot with quick exhaust

Coding: T772S.32.0.Ⓕ.MP

Ⓕ	FUNCTION		
	1AA	=	Normally Open
	1AC	=	Normally Closed

Operational characteristics	
Fluid	Filtered air. No lubrication needed, if applied it shall be continuous
Max working pressure (bar)	10
Minimum piloting pressure (bar)	2,5
Temperature °C	-5 ÷ +50
Flow rate at 6 bar with Δp=1 (Nl/min)	4100
Orifice size (mm)	15
Working ports size	G1/2"
Pilot ports size	G1/8"

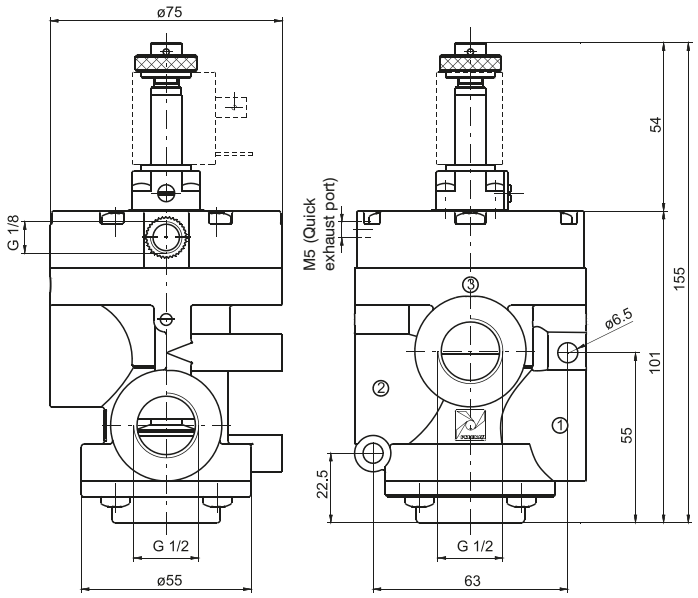

Weight 390 g

For compressed air - N.C.
Inlet port 1
Outlet port 2
Exhaust port 3

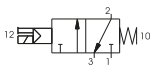

For compressed air - N.O.
Inlet port 3
Outlet port 2
Outlet port 1

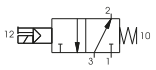

Overall dimensions and technical information are provided solely for informative purposes and may be modified without notice

Solenoid - Spring - External pilot with quick exhaust

Coding: T772S.32.0.1.MP

Operational characteristics	
Fluid	Filtered air. No lubrication needed, if applied it shall be continuous
Max working pressure (bar)	10
Minimum piloting pressure (bar)	See diagram at general page
Temperature °C	-5 ÷ +50
Flow rate at 6 bar with Δp=1 (Nl/min)	4100
Orifice size (mm)	15
Working ports size	G1/2"
Pilot ports size	G1/8"

Weight 390 g

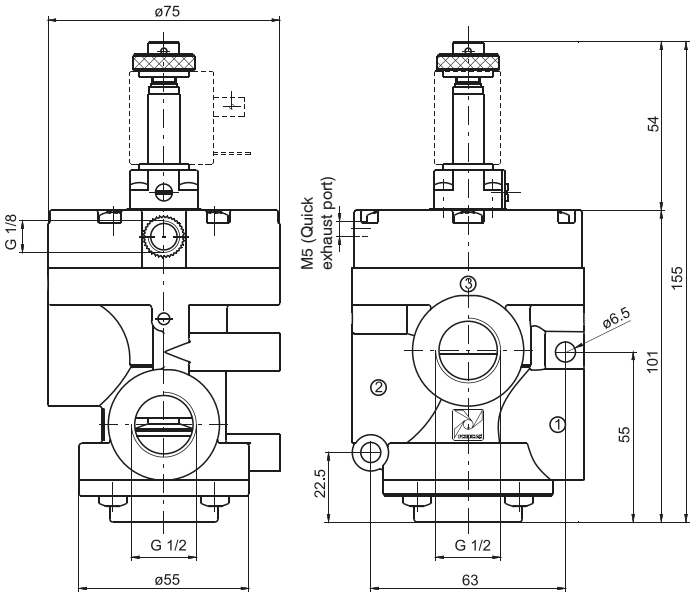

For compressed air - N.C.
Inlet port 1
Outlet port 2
Exhaust port 3

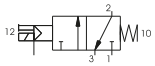

For compressed air - N.O.
Inlet port 3
Outlet port 2
Outlet port 1

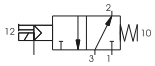

Pneumatic - Spring

Coding: T772/V.32.11.1

Operational characteristics	
Fluid	Vacuum
Minimum piloting pressure (bar)	2,5
Temperature °C	-5 ÷ +50
Orifice size (mm)	15
Working ports size	G1/2"
Pilot ports size	G1/8"

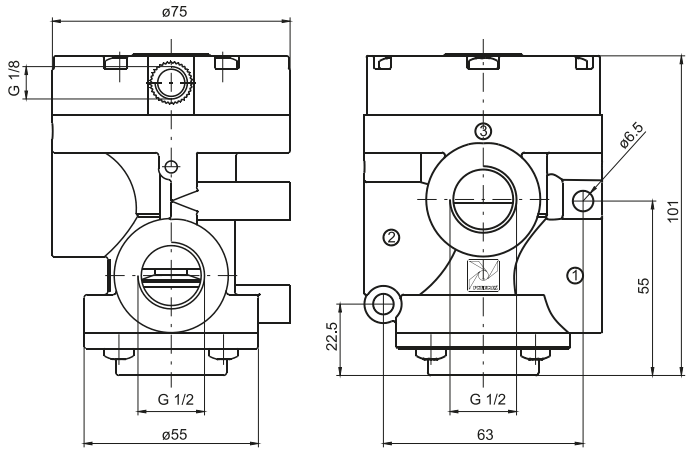

Weight 350 g

For vacuum - N.C.
Exhaust port 3
Outlet port 2
Pump 1

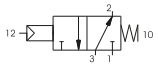

For vacuum - N.O.
Outlet port 1
Outlet port 2
Pump 3

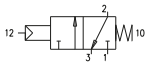

Solenoid-Spring - Internal pilot

Coding: T772/V.32.0.Ⓕ.MV

Operational characteristics	
Fluid	Vacuum
Temperature °C	-5 ÷ +50
Orifice size (mm)	15
Working ports size	G1/2"
Pilot ports size	G1/8"

	FUNCTION		
Ⓕ	1AA	=	Normally Open
	1AC	=	Normally Closed

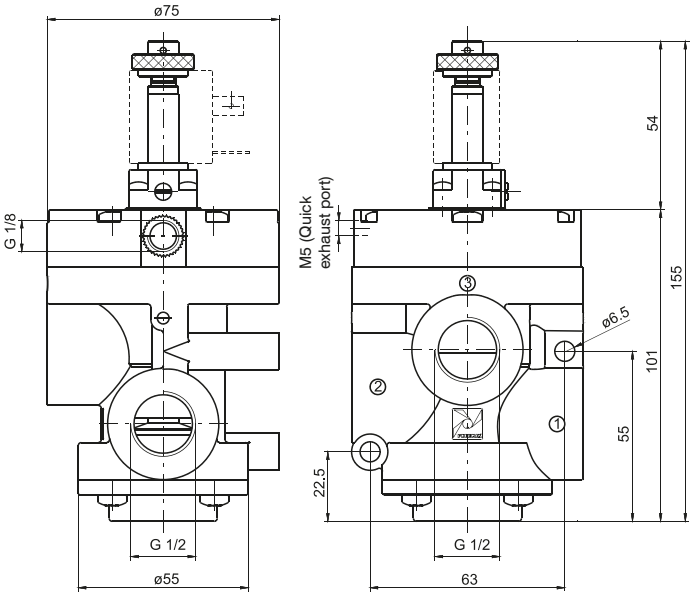

Weight 390 g

For vacuum - N.O.
Exhaust port 3
Outlet port 2
Pump 1

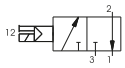

For vacuum - N.O.
Outlet port 1
Outlet port 2
Pump 3

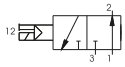

Overall dimensions and technical information are provided solely for informative purposes and may be modified without notice

Solenoid-Spring - External pilot

Coding: T772/V.32.0.1.MP

Operational characteristics	
Fluid	Vacuum
Minimum piloting pressure (bar)	2,5
Temperature °C	-5 ÷ +50
Orifice size (mm)	15
Working ports size	G1/2"
Pilot ports size	G1/8"

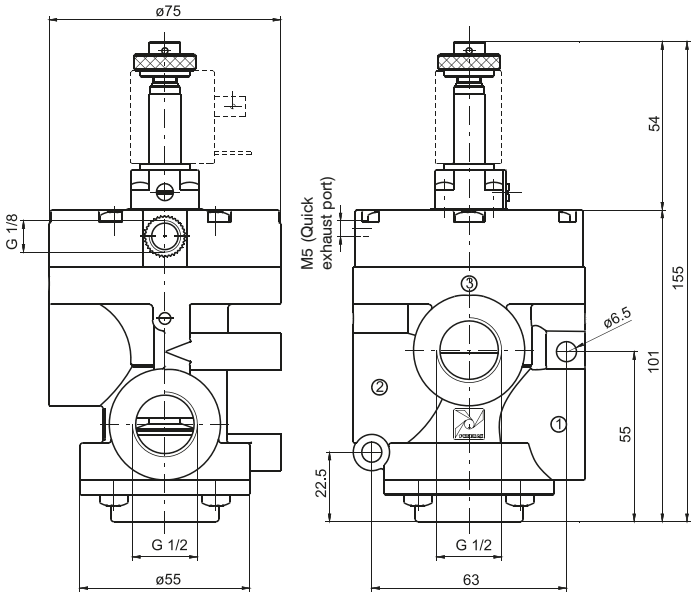

Weight 390 g

For vacuum - N.O.
Outlet port 1
Outlet port 2
Pump 3

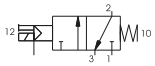

For vacuum - N.C.
Exhaust port 3
Outlet port 2
Pump 1

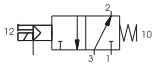

Solenoid - Spring - External pilot with quick exhaust

Coding: T772/VS.32.0.1.MP

Operational characteristics	
Fluid	Vacuum
Minimum piloting pressure (bar)	2,5
Temperature °C	-5 ÷ +50
Orifice size (mm)	15
Working ports size	G1/2"
Pilot ports size	G1/8"

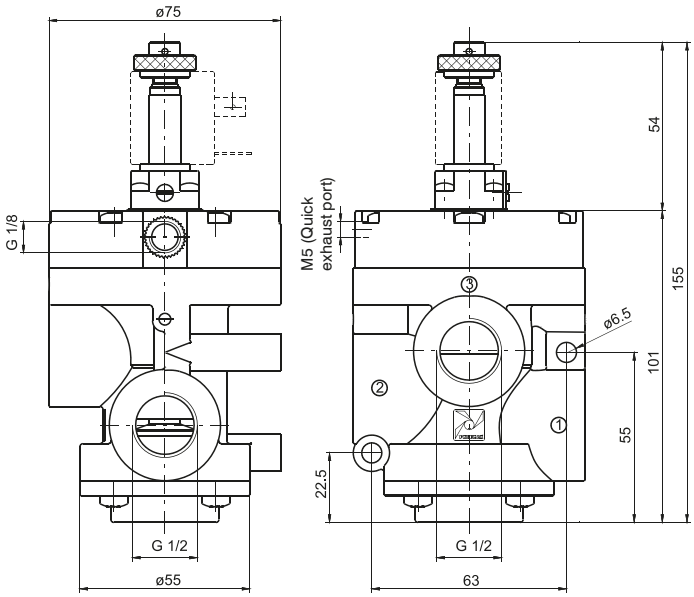

Weight 390 g

For vacuum - N.O.
Outlet port 1
Outlet port 2
Pump 3

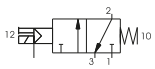

For vacuum - N.C.
Exhaust port 3
Outlet port 2
Pump 1

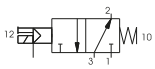

Pneumatic - Spring

Coding: T773.32.11.1

Operational characteristics	
Fluid	Filtered air. No lubrication needed, if applied it shall be continuous
Max working pressure (bar)	10
Minimum piloting pressure (bar)	See diagram at general page
Temperature °C	-5 ÷ +50
Flow rate at 6 bar with Δp=1 (Nl/min)	7500
Orifice size (mm)	20
Working ports size	G3/4"
Pilot ports size	G1/8"

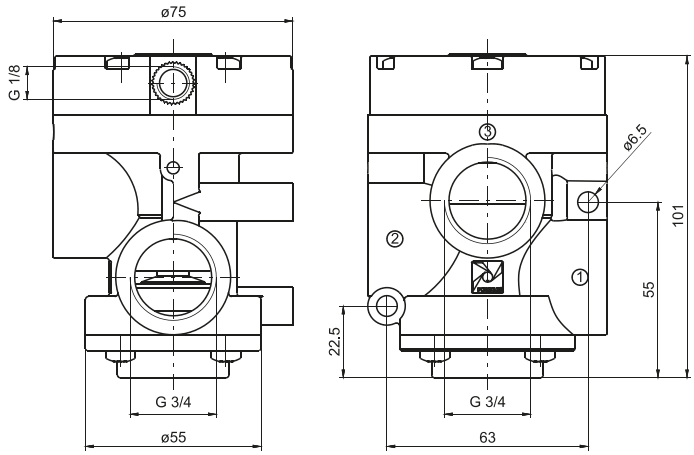

Weight 330 g

For compressed air - N.C.
Inlet port 1
Outlet port 2
Exhaust port 3

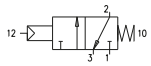

For compressed air - N.O.
Inlet port 3
Outlet port 2
Outlet port 1

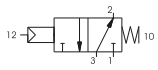

Solenoid-Spring - Internal pilot

Coding: T773.32.0.Ⓕ.MP

	FUNCTION		
Ⓕ	1AA	=	Normally Open
	1AC	=	Normally Closed

Operational characteristics	
Fluid	Filtered air. No lubrication needed, if applied it shall be continuous
Max working pressure (bar)	10
Minimum piloting pressure (bar)	2,5
Temperature °C	-5 ÷ +50
Flow rate at 6 bar with Δp=1 (Nl/min)	7500
Orifice size (mm)	20
Working ports size	G3/4"
Pilot ports size	G1/8"

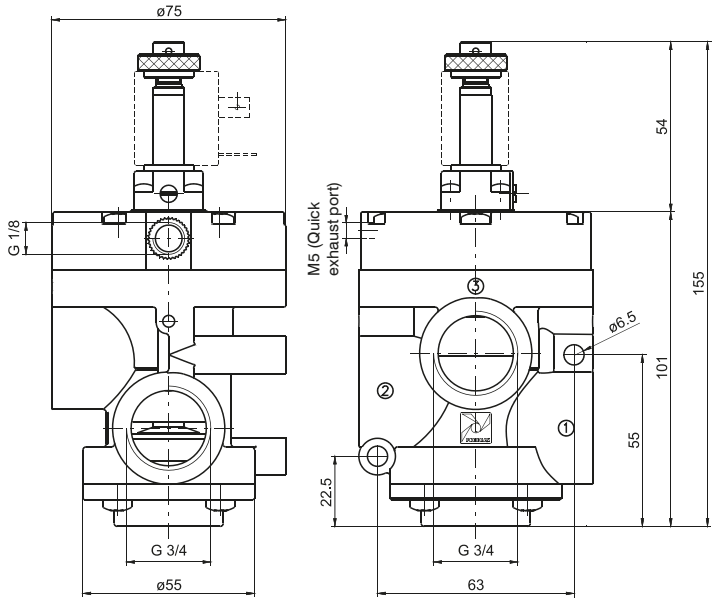

Weight 370 g

For compressed air - N.C.
Inlet port 1
Outlet port 2
Exhaust port 3

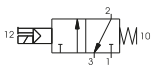

For compressed air - N.O.
Inlet port 3
Outlet port 2
Outlet port 1

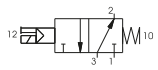

Overall dimensions and technical information are provided solely for informative purposes and may be modified without notice

Solenoid-Spring - External pilot

Coding: T773.32.0.1.MP

Operational characteristics	
Fluid	Filtered air. No lubrication needed, if applied it shall be continuous
Max working pressure (bar)	10
Minimum piloting pressure (bar)	See diagram at general page
Temperature °C	-5 ÷ +50
Flow rate at 6 bar with Δp=1 (Nl/min)	7500
Orifice size (mm)	20
Working ports size	G3/4"
Pilot ports size	G1/8"

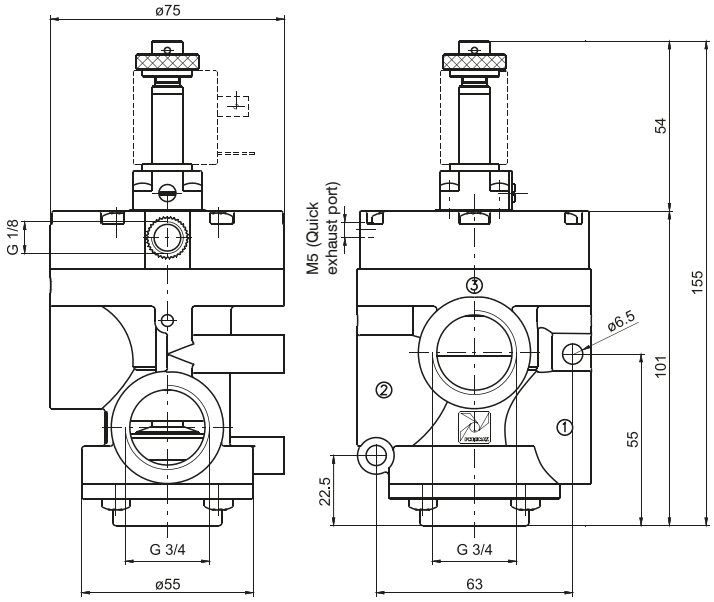

Weight 370 g

For compressed air - N.C.
Inlet port 1
Outlet port 2
Exhaust port 3

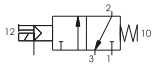

For compressed air - N.O.
Inlet port 3
Outlet port 2
Outlet port 1

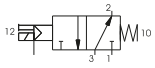

Solenoid-Spring - Internal pilot with quick exhaust

Coding: T773S.32.0.Ⓕ.MP

Operational characteristics	
Fluid	Filtered air. No lubrication needed, if applied it shall be continuous
Max working pressure (bar)	10
Minimum piloting pressure (bar)	2,5
Temperature °C	-5 ÷ +50
Flow rate at 6 bar with Δp=1 (Nl/min)	7500
Orifice size (mm)	20
Working ports size	G3/4"
Pilot ports size	G1/8"

	FUNCTION		
Ⓕ	**1AA**	=	Normally Open
	1AC	=	Normally Closed

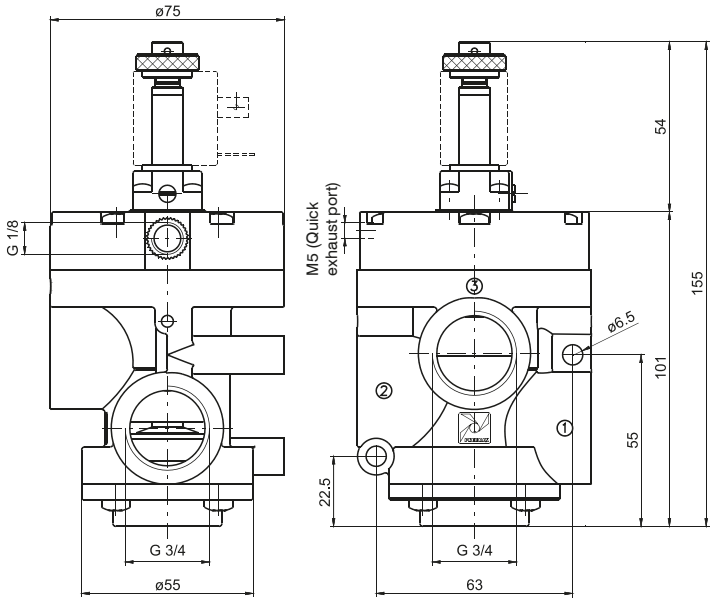

Weight 370 g

For compressed air - N.C.
Inlet port 1
Outlet port 2
Exhaust port 3

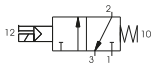

For compressed air - N.O.
Inlet port 3
Outlet port 2
Outlet port 1

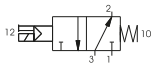

Solenoid - Spring - External pilot with quick exhaust

Coding: T773S.32.0.1.MP

Operational characteristics	
Fluid	Filtered air. No lubrication needed, if applied it shall be continuous
Max working pressure (bar)	10
Minimum piloting pressure (bar)	See diagram at general page
Temperature °C	-5 ÷ +50
Flow rate at 6 bar with Δp=1 (Nl/min)	7500
Orifice size (mm)	20
Working ports size	G3/4"
Pilot ports size	G1/8"

Weight 370 g

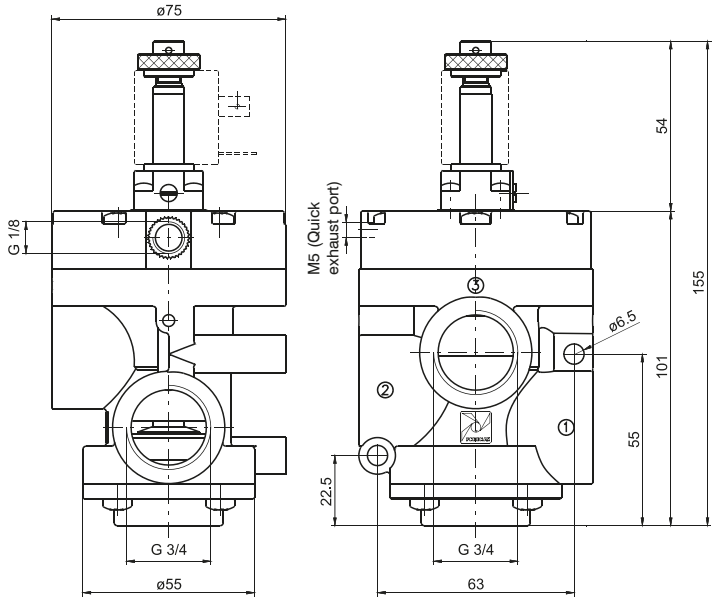

For compressed air - N.C.
Inlet port 1
Outlet port 2
Exhaust port 3

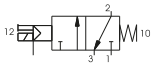

For compressed air - N.O.
Inlet port 3
Outlet port 2
Outlet port 1

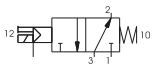

Overall dimensions and technical information are provided solely for informative purposes and may be modified without notice

Pneumatic - Spring

Coding: T773/V.32.11.1

Operational characteristics	
Fluid	Vacuum
Minimum piloting pressure (bar)	2,5
Temperature °C	-5 ÷ +50
Orifice size (mm)	20
Working ports size	G3/4"
Pilot ports size	G1/8"

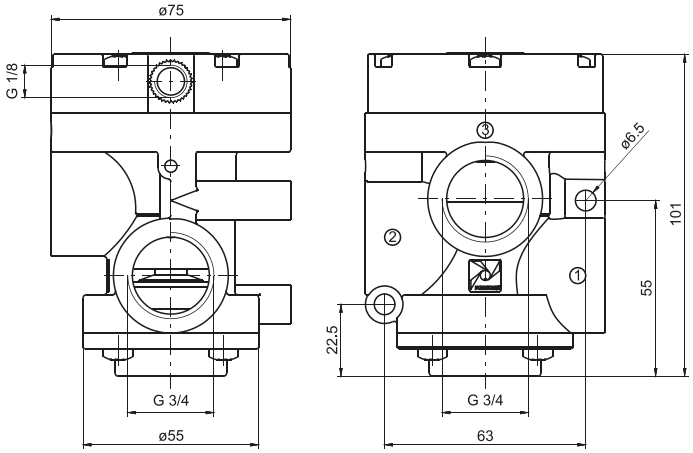

Weight 330 g

For vacuum - N.C.
Exhaust port 3
Outlet port 2
Pump 1

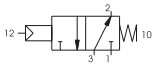

For vacuum - N.O.
Outlet port 1
Outlet port 2
Pump 3

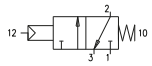

Solenoid-Spring - Internal pilot

Coding: T773/V.32.0.Ⓕ.MV

Operational characteristics	
Fluid	Vacuum
Temperature °C	-5 ÷ +50
Orifice size (mm)	20
Working ports size	G3/4"
Pilot ports size	G1/8"

	FUNCTION		
Ⓕ	**1AA**	=	Normally Open
	1AC	=	Normally Closed

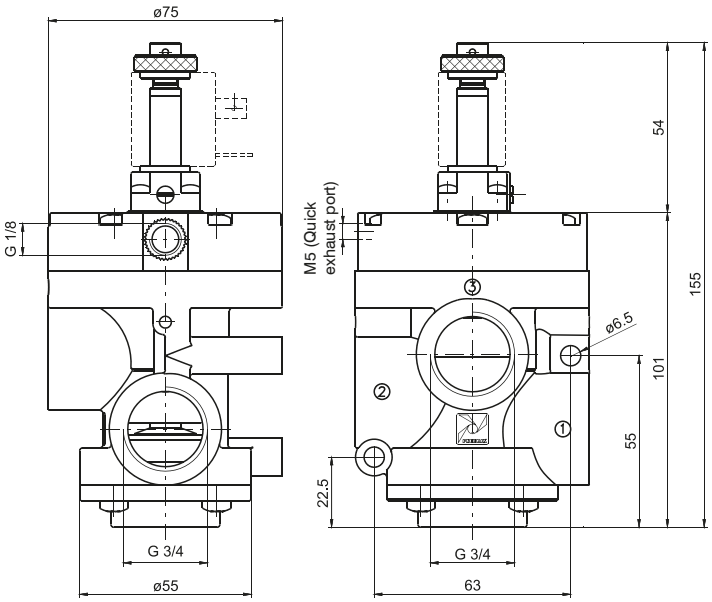

Weight 370 g

For vacuum - N.O.
Exhaust port 3
Outlet port 2
Pump 1

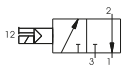

For vacuum - N.O.
Outlet port 1
Outlet port 2
Pump 3

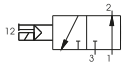

Solenoid-Spring - External pilot

Coding: T773/V.32.0.1.MP

Operational characteristics	
Fluid	Vacuum
Minimum piloting pressure (bar)	2,5
Temperature °C	-5 ÷ +50
Orifice size (mm)	20
Working ports size	G3/4"
Pilot ports size	G1/8"

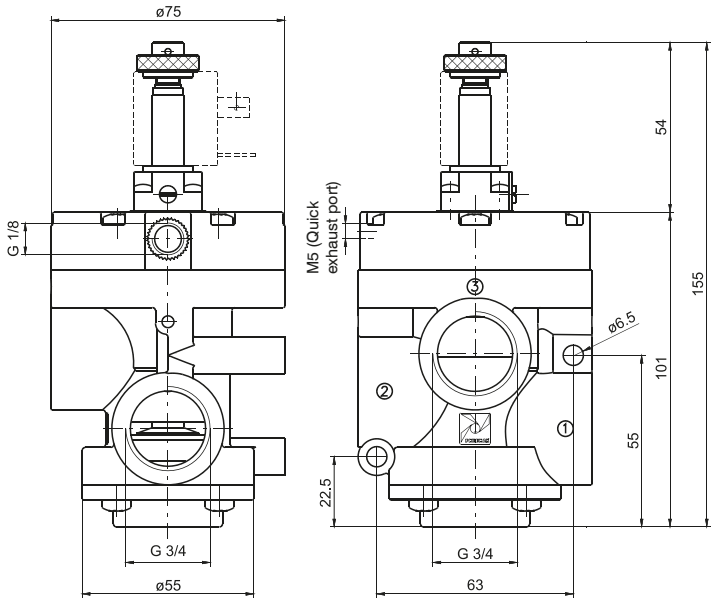

Weight 350 g

For vacuum - N.O.
Outlet port 1
Outlet port 2
Pump 3

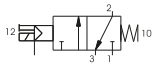

For vacuum - N.C.
Exhaust port 3
Outlet port 2
Pump 1

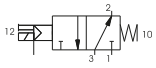

Solenoid - Spring - External pilot with quick exhaust

Coding: T773/VS.32.0.1.MP

Operational characteristics	
Fluid	Vacuum
Minimum piloting pressure (bar)	2,5
Temperature °C	-5 ÷ +50
Orifice size (mm)	20
Working ports size	G3/4"
Pilot ports size	G1/8"

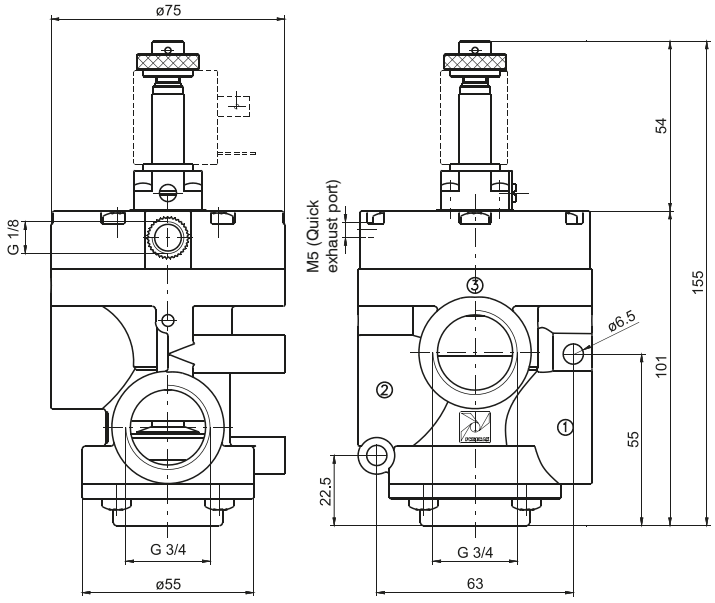

Weight 350 g

For vacuum - N.O.
Outlet port 1
Outlet port 2
Pump 3

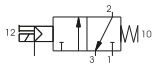

For vacuum - N.C.
Exhaust port 3
Outlet port 2
Pump 1

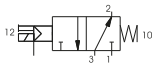

Overall dimensions and technical information are provided solely for informative purposes and may be modified without notice

Bistable for compressed air - G1/2"

Coding: T772.32.0.1.BP

Operational characteristics	
Fluid	Filtered air. No lubrication needed, if applied it shall be continuous
Max working pressure (bar)	10
Minimum piloting pressure (bar)	2
Temperature °C	-5 ÷ +50
Flow rate at 6 bar with Δp=1 (Nl/min)	4100
Orifice size (mm)	15
Working ports size	G1/2"
Pilot ports size	G1/8"

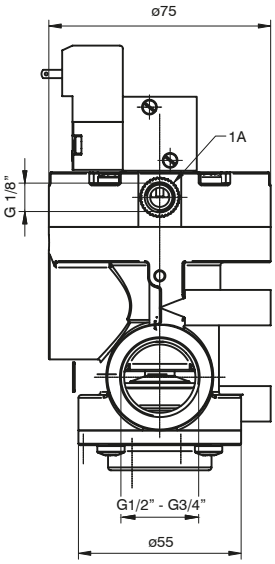

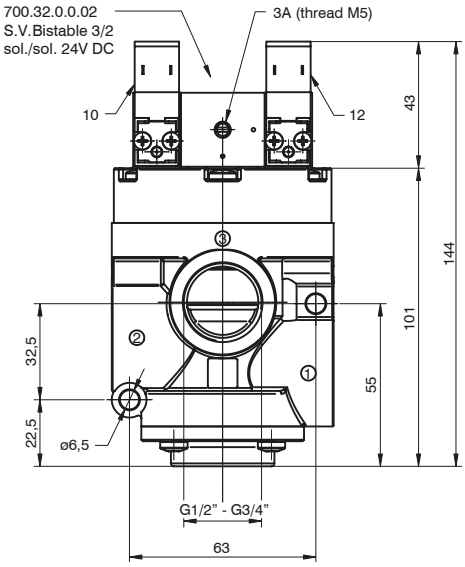

Weight 550 g

For compressed air - N.C.
Inlet port 1
Outlet port 2
Exhaust port 3

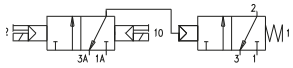

For compressed air - N.O.
Inlet port 3
Outlet port 2
Outlet port 1

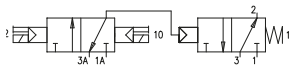

Bistable for compressed air - G3/4"

Coding: T773.32.0.1.BP

Operational characteristics	
Fluid	Filtered air. No lubrication needed, if applied it shall be continuous
Max working pressure (bar)	10
Minimum piloting pressure (bar)	2
Temperature °C	-5 ÷ +50
Flow rate at 6 bar with Δp=1 (Nl/min)	7500
Orifice size (mm)	15
Working ports size	G3/4"
Pilot ports size	G1/8"

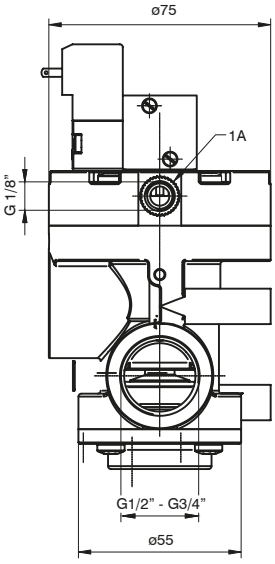

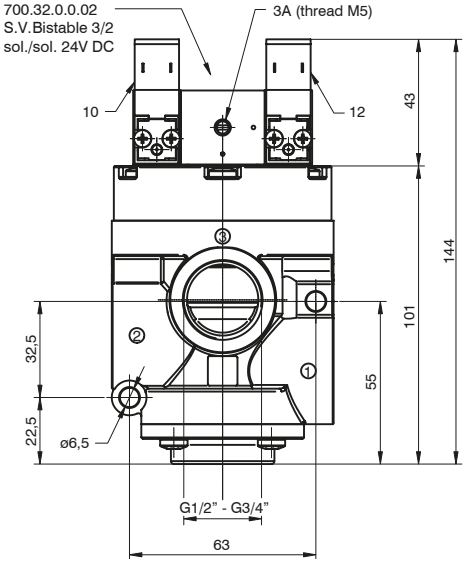

Weight 550 g

For compressed air - N.C.
Inlet port 1
Outlet port 2
Exhaust port 3

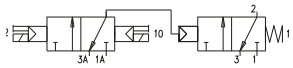

For compressed air - N.O.
Inlet port 3
Outlet port 2
Outlet port 1

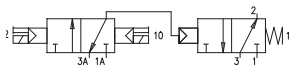

Bistable for compressed air with quick exhaust - G1/2"

Coding: T772S.32.0.1.BP

Operational characteristics	
Fluid	Filtered air. No lubrication needed, if applied it shall be continuous
Max working pressure (bar)	10
Minimum piloting pressure (bar)	2
Temperature °C	-5 ÷ +50
Flow rate at 6 bar with Δp=1 (Nl/min)	4100
Orifice size (mm)	15
Working ports size	G1/2"
Pilot ports size	G1/8"

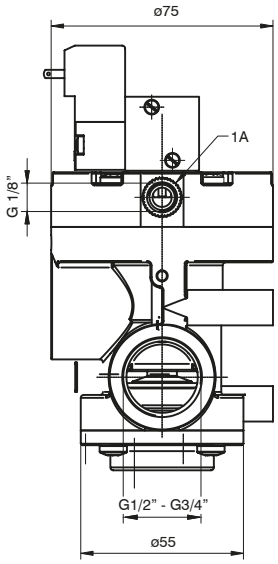

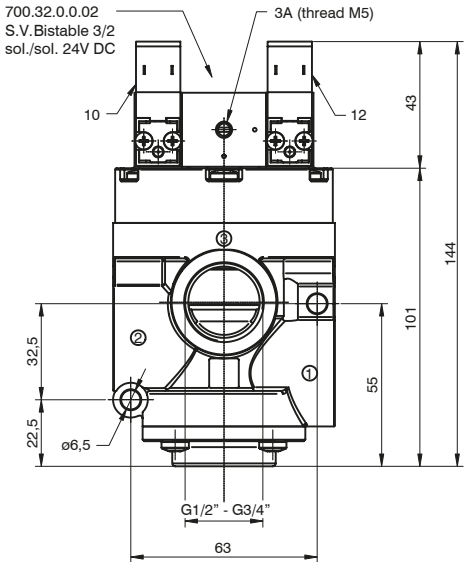

Weight 550 g

For compressed air - N.C.
Inlet port 1
Outlet port 2
Exhaust port 3

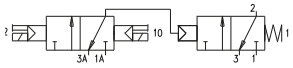

For compressed air - N.O.
Inlet port 3
Outlet port 2
Outlet port 1

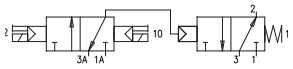

Bistable for compressed air with quick exhaust - G3/4"

Coding: T773S.32.0.1.BP

Operational characteristics	
Fluid	Filtered air. No lubrication needed, if applied it shall be continuous
Max working pressure (bar)	10
Minimum piloting pressure (bar)	2
Temperature °C	-5 ÷ +50
Flow rate at 6 bar with Δp=1 (Nl/min)	7500
Orifice size (mm)	15
Working ports size	G3/4"
Pilot ports size	G1/8"

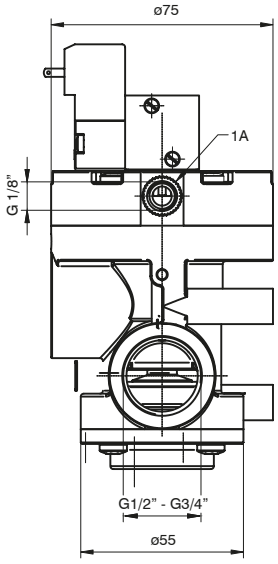

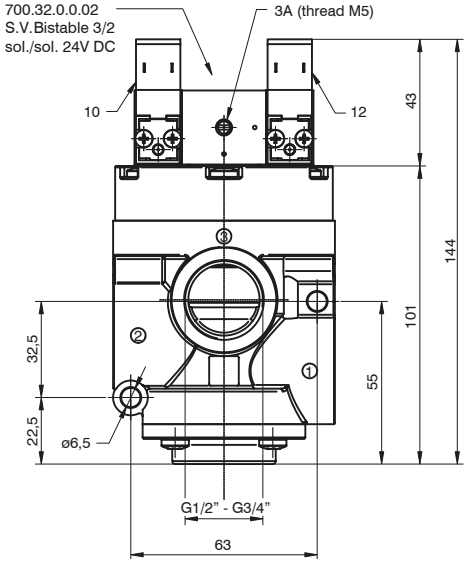

Weight 550 g

For compressed air - N.C.
Inlet port 1
Outlet port 2
Exhaust port 3

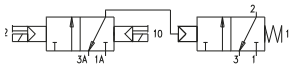

For compressed air - N.O.
Inlet port 3
Outlet port 2
Outlet port 1

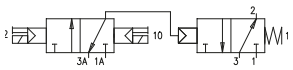

Overall dimensions and technical information are provided solely for informative purposes and may be modified without notice

Bistable for vacuum - G1/2"

Coding: T772/V.32.0.1.BP

Operational characteristics	
Fluid	Vacuum
Minimum piloting pressure (bar)	2,5
Temperature °C	-5 ÷ +50
Orifice size (mm)	15
Working ports size	G1/2"
Pilot ports size	G1/8"

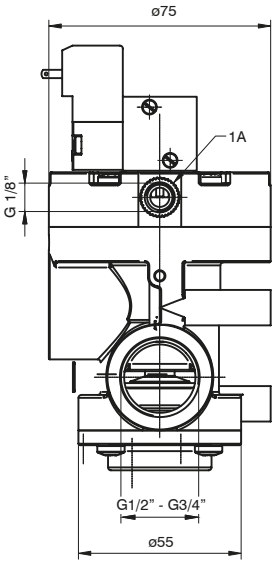

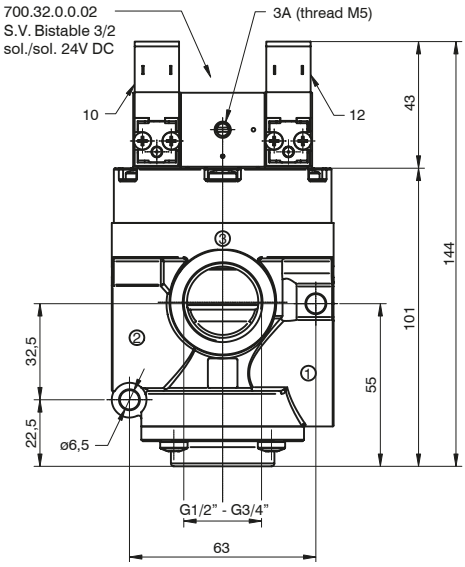

Weight 550 g

For vacuum - N.C.
Pump 1
Outlet port 2
Exhaust port 3

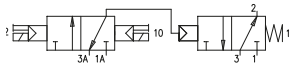

For vacuum - N.O.
Pump 3
Outlet port 2
Outlet port 1

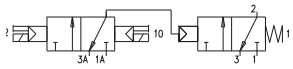

Bistable for vacuum - G3/4"

Coding: T773/V.32.0.1.BP

Operational characteristics	
Fluid	Vacuum
Minimum piloting pressure (bar)	2,5
Temperature °C	-5 ÷ +50
Orifice size (mm)	15
Working ports size	G3/4"
Pilot ports size	G1/8"

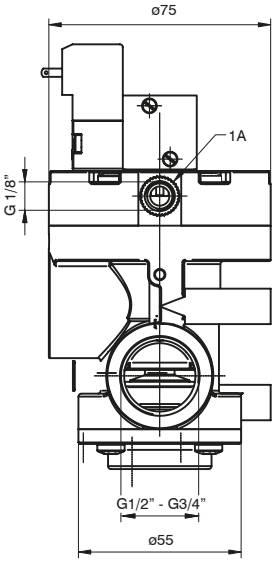

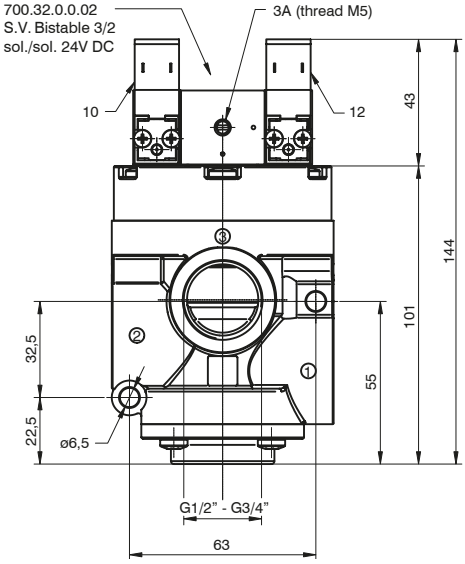

Weight 550 g

For vacuum - N.C.
Pump 1
Outlet port 2
Exhaust port 3

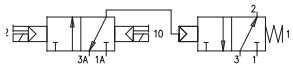

For vacuum - N.O.
Pump 3
Outlet port 2
Outlet port 1

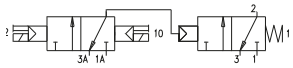

Bistable for vacuum with quick exhaust - G1/2"

Coding: T772/VS.32.0.1.BP

Operational characteristics	
Fluid	Vacuum
Minimum piloting pressure (bar)	2,5
Temperature °C	-5 ÷ +50
Orifice size (mm)	15
Working ports size	G1/2"
Pilot ports size	G1/8"

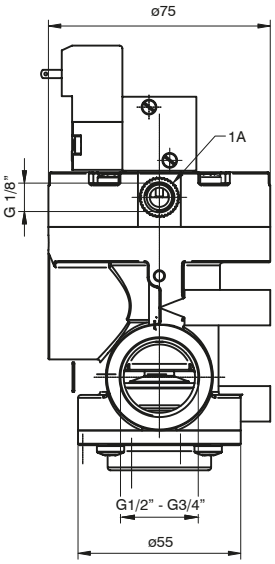

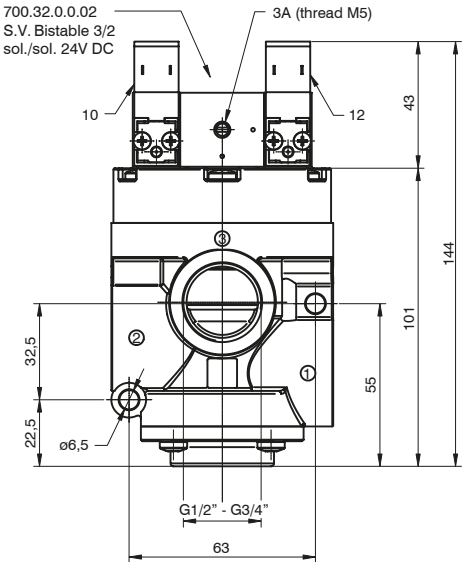

Weight 550 g

For vacuum - N.C.
Pump 1
Outlet port 2
Exhaust port 3

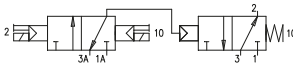

For vacuum - N.O.
Pump 3
Outlet port 2
Exhaust port 3

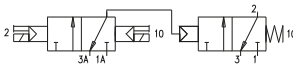

Bistable for vacuum with quick exhaust - G3/4"

Coding: T773/VS.32.0.1.BP

Operational characteristics	
Fluid	Vacuum
Minimum piloting pressure (bar)	2,5
Temperature °C	-5 ÷ +50
Orifice size (mm)	15
Working ports size	G3/4"
Pilot ports size	G1/8"

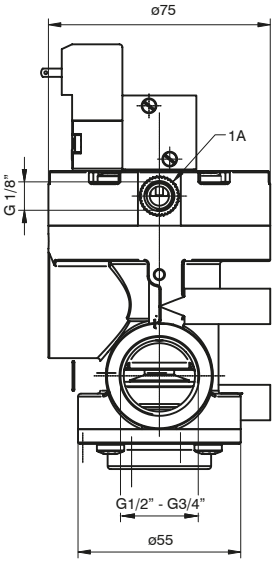

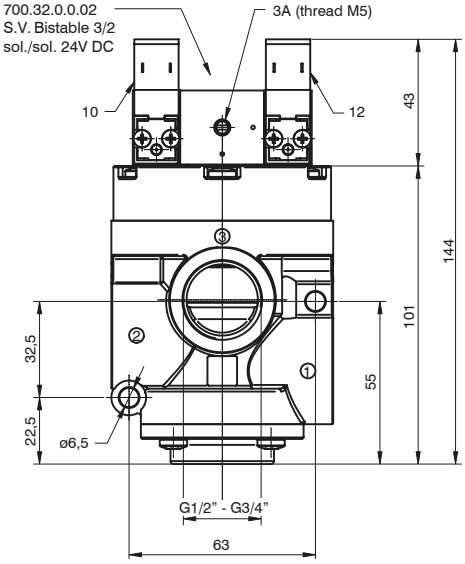

Weight 550 g

For vacuum - N.C.
Pump 1
Outlet port 2
Exhaust port 3

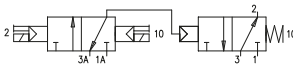

For vacuum - N.O.
Pump 3
Outlet port 2
Outlet port 1

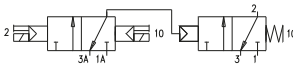

Overall dimensions and technical information are provided solely for informative purposes and may be modified without notice

Series T771 - for compressed air & vacuum in technopolymer - G1"

General

The range of G1" pilot and solenoid operated poppet valves represents an evolution of the current popular Zama series and of the series T772-T773 (G1/2"-3/4").
Also for this series the main feature is the technopolimer material used to mould most of its components.
The use of this materiel results in a versatile, lightweight and economical valve.
This series also has other technical and functional enhancements over the existing range. Firstly, the traditional piston lip seal has been replaced with a rolling diaphragm, thereby eliminating frictional wear and tear to this seal.
This series (with the exception of certain vacuum models) also features a seal, which separates port 3 from the piston head. The inclusion of this seal has enhanced the valve's performance and allows the valve to be used as normally open (a configuration not possible in the Zama series).
Solenoid operated valves (both internal and external pilot versions) are fitted with a quick exhaust unit, which reduces the return stroke operating time by 80%.
The bulk of the valves in this series use the MP type operator, the exception being internally piloted vacuum models, which use the MV operator. These operators differ from the M2 type in that they have self-tapping mounting screws for use in plastics.
Bistable versions are also available, both for air or for vacuum. These valves are fitted with a 3/2 sol-sol valve (instead of the standard pilot valve) fitted with two 15mm 24V Dc microvalves (N331.0A).
The ordering code are referring to the solenoid valves with mechanics "MP" or "MV" assembled.
Coils are not included and have to be ordered separately (series 300, Section 1, General Catalogue), with the exception of the bistable versions which already include 24V Dc Coils (N331.0A).
Coil c UL us homologated are available (see 300 Series).

Construction characteristics

Springs	AISI 303 stainless steel
Diaphragm	Oil resistant rubber (NBR)
Body, operator and end cover	High impact resistant thermoplastic
Seals and poppets	NBR
Piston and shaft	Acetal resin

Use and maintenance

These valves have a mean life of 10 to 15 million cycles under normal operating conditions.
Lubrication is not required for good operation but we recommend good filtration to avoid dirty deposit causing malfunction.
Please ensure that the valve is being used according with the manufacturers specification, such as air pressure and temperature.
The exhaust port of the distributor has to be protected in a dusty and dirty environment.
For these products, according to the construction technique and special application, is not required any maintenance with parts replacement.
When necessary it is sufficient to clean the internal parts.
When it is used the solenoid valves with internal pilot, either for air or vacuum, inlet flow rate must be equal or higher that the required consumption flow rate.
Otherwise is better choose the external pilot version.

MINIMUM PILOTING PRESSURE DIAGRAM (Valves for compressed air)
PNEUMATIC/SPRING AND EXTERNAL SOLENOID PILOT VERSION

Normally closed valve

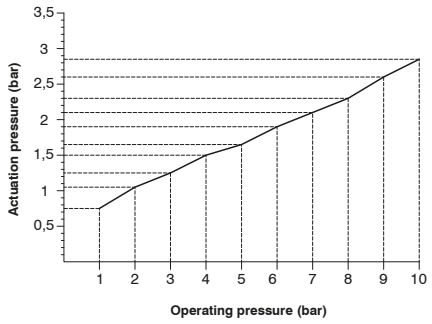

Normally open valve

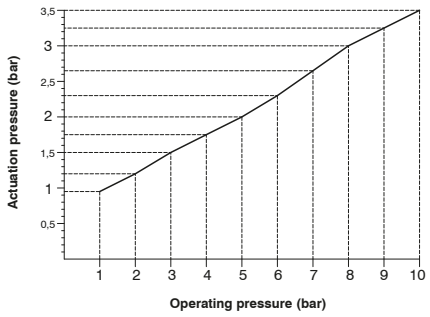

Pneumatic - Spring

Coding: T771.32.11.1

Operational characteristics	
Fluid	Filtered air. No lubrication needed, if applied it shall be continuous
Max working pressure (bar)	10
Minimum piloting pressure (bar)	See diagram at general page
Temperature °C	-5 ÷ +50
Flow rate at 6 bar with Δp=1 (Nl/min)	12500
Orifice size (mm)	25
Working ports size	G1"
Pilot ports size	G1/8"

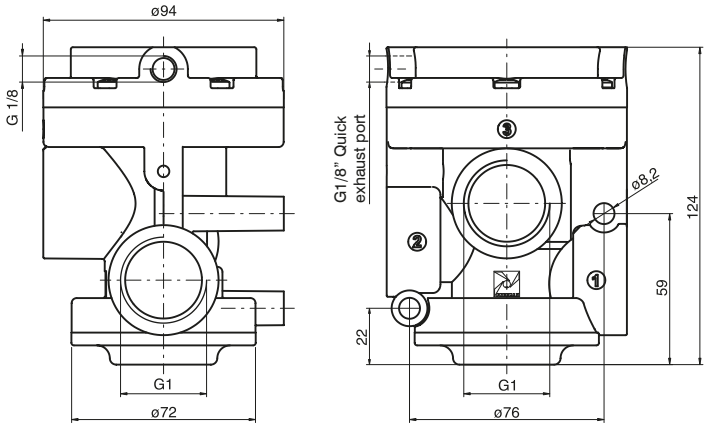

For compressed air - N.C.
Inlet port 1
Outlet port 2
Exhaust port 3

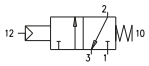

For compressed air - N.O.
Inlet port 3
Outlet port 2
Outlet port 1

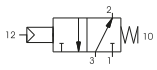

Weight 480 g

Solenoid-Spring - Internal pilot

Coding: T771.32.0.Ⓕ.MP

Operational characteristics	
Fluid	Filtered air. No lubrication needed, if applied it shall be continuous
Max working pressure (bar)	10
Minimum piloting pressure (bar)	2,5
Temperature °C	-5 ÷ +50
Flow rate at 6 bar with Δp=1 (Nl/min)	12500
Orifice size (mm)	25
Working ports size	G1"
Pilot ports size	G1/8"

	FUNCTION		
Ⓕ	1AC	=	Normally Closed
	1AA	=	Normally Open

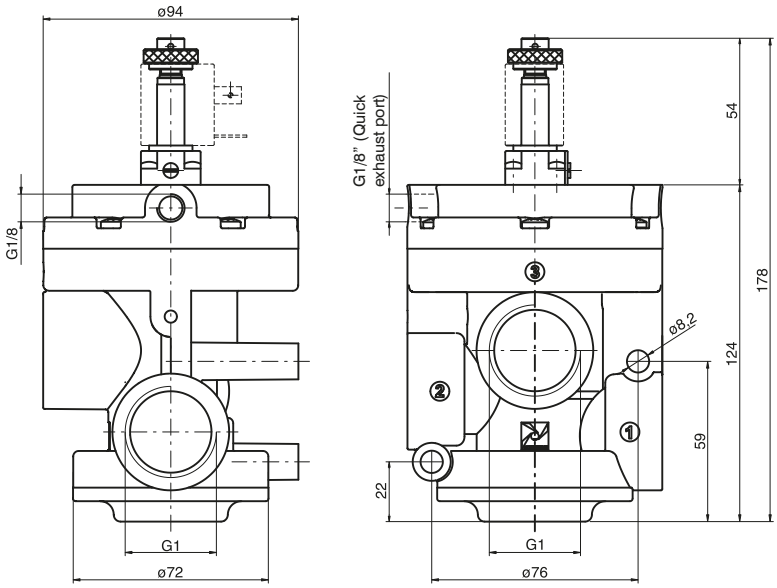

For compressed air - N.C.
Inlet port 1
Outlet port 2
Exhaust port 3

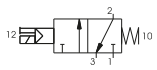

For compressed air - N.O.
Inlet port 3
Outlet port 2
Outlet port 1

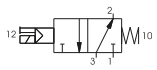

Weight 520 g

Overall dimensions and technical information are provided solely for informative purposes and may be modified without notice

Solenoid-Spring - External pilot

Coding: T771.32.0.1.MP

Operational characteristics	
Fluid	Filtered air. No lubrication needed, if applied it shall be continuous
Max working pressure (bar)	10
Minimum piloting pressure (bar)	See diagram at general page
Temperature °C	-5 ÷ +50
Flow rate at 6 bar with Δp=1 (Nl/min)	12500
Orifice size (mm)	25
Working ports size	G1"
Pilot ports size	G1/8"

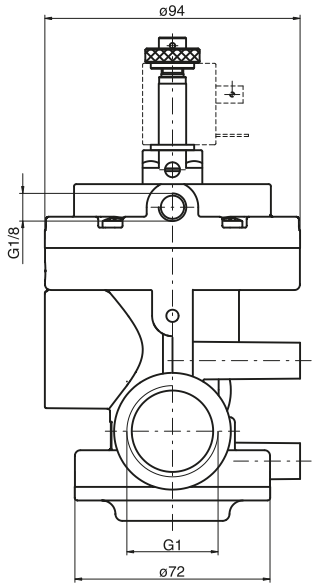

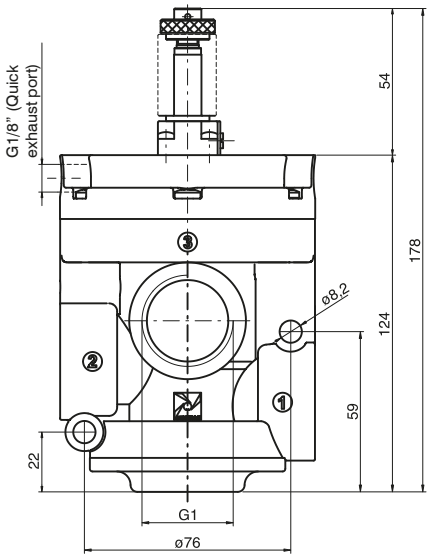

Weight 520 g

For compressed air - N.C.
Inlet port 1
Outlet port 2
Exhaust port 3

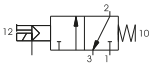

For compressed air - N.O.
Inlet port 3
Outlet port 2
Outlet port 1

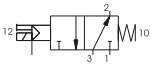

Solenoid-Spring - Internal pilot with quick exhaust

Coding: T771S.32.0.Ⓕ.MP

Operational characteristics	
Fluid	Filtered air. No lubrication needed, if applied it shall be continuous
Max working pressure (bar)	10
Minimum piloting pressure (bar)	2,5
Temperature °C	-5 ÷ +50
Flow rate at 6 bar with Δp=1 (Nl/min)	12500
Orifice size (mm)	25
Working ports size	G1"
Pilot ports size	G1/8"

	FUNCTION		
Ⓕ	**1AC**	=	Normally Closed
	1AA	=	Normally Open

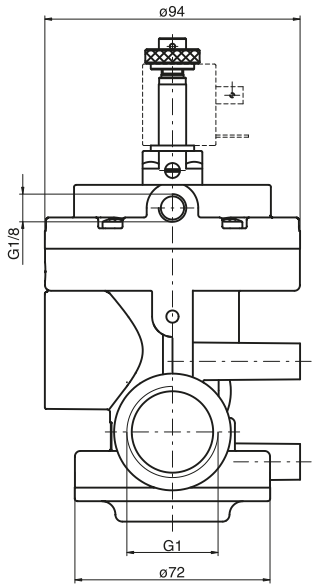

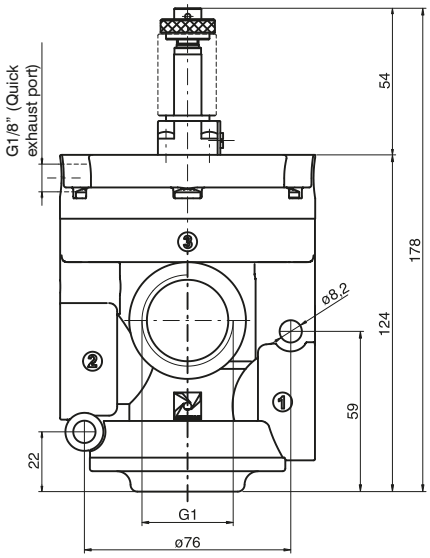

Weight 520 g

For compressed air - N.C.
Inlet port 1
Outlet port 2
Exhaust port 3

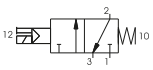

For compressed air - N.O.
Inlet port 3
Outlet port 2
Outlet port 1

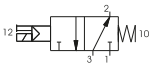

Solenoid - Spring - External pilot with quick exhaust

Coding: T771S.32.0.1.MP

Operational characteristics	
Fluid	Filtered air. No lubrication needed, if applied it shall be continuous
Max working pressure (bar)	10
Minimum piloting pressure (bar)	See diagram at general page
Temperature °C	-5 ÷ +50
Flow rate at 6 bar with Δp=1 (Nl/min)	12500
Orifice size (mm)	25
Working ports size	G1"
Pilot ports size	G1/8"

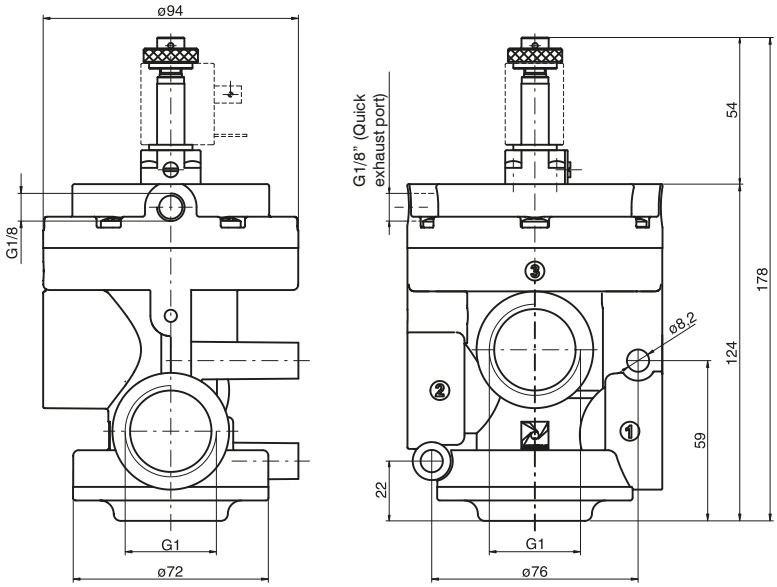

Weight 520 g

For compressed air - N.C.
Inlet port 1
Outlet port 2
Exhaust port 3

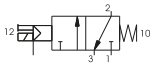

For compressed air - N.O.
Inlet port 3
Outlet port 2
Outlet port 1

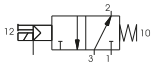

Overall dimensions and technical information are provided solely for informative purposes and may be modified without notice

Pneumatic - Spring

Coding: T771/V.32.11.1

Operational characteristics	
Fluid	Vacuum
Minimum piloting pressure (bar)	2
Temperature °C	-5 ÷ +50
Orifice size (mm)	25
Working ports size	G1"
Pilot ports size	G1/8"

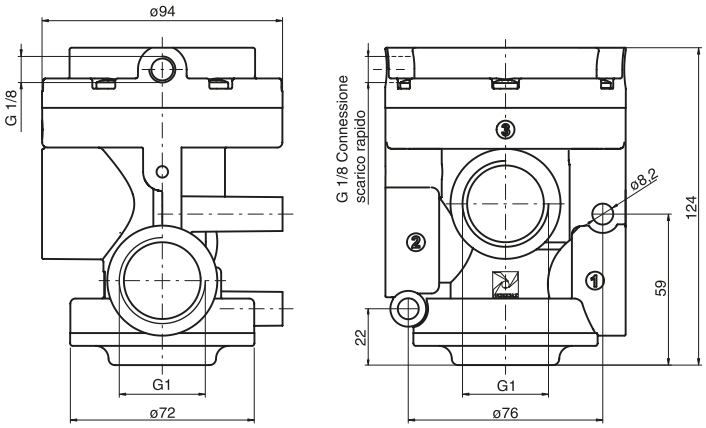

Weight 480 g

For vacuum - N.C.
Exhaust port 3
Outlet port 2
Pump 1

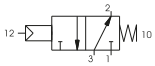

For vacuum - N.O.
Outlet port 1
Outlet port 2
Pump 3

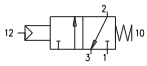

Solenoid-Spring - Internal pilot

Coding: T771/V.32.0.Ⓕ.MV

Operational characteristics	
Fluid	Vacuum
Temperature °C	-5 ÷ +50
Orifice size (mm)	25
Working ports size	G1"
Pilot ports size	G1/8"

	FUNCTION		
Ⓕ	1AC	=	Normally Closed
	1AA	=	Normally Open

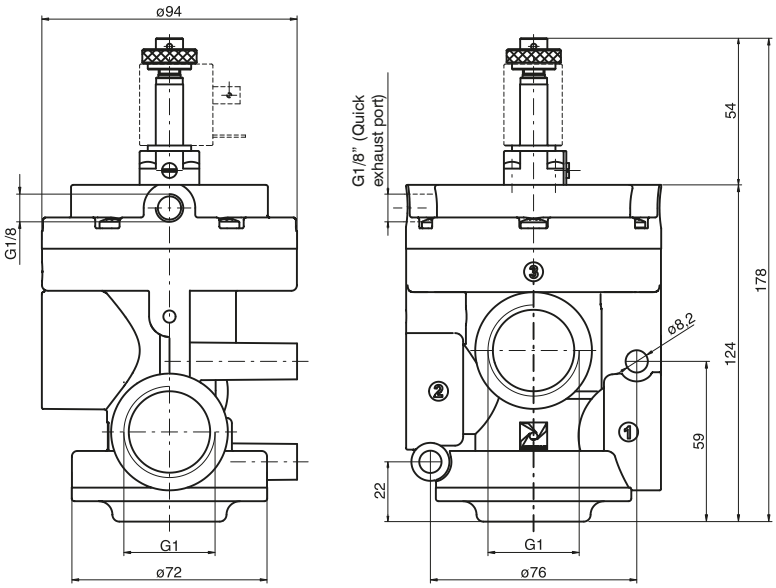

Weight 520 g

For vacuum - N.O.
Exhaust port 3
Outlet port 2
Pump 1

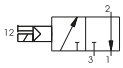

For vacuum - N.O.
Outlet port 1
Outlet port 2
Pump 3

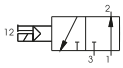

Solenoid-Spring - External pilot

Coding: T771/V.32.0.1.MP

Operational characteristics	
Fluid	Vacuum
Minimum piloting pressure (bar)	2
Temperature °C	-5 ÷ +50
Orifice size (mm)	25
Working ports size	G1"
Pilot ports size	G1/8"

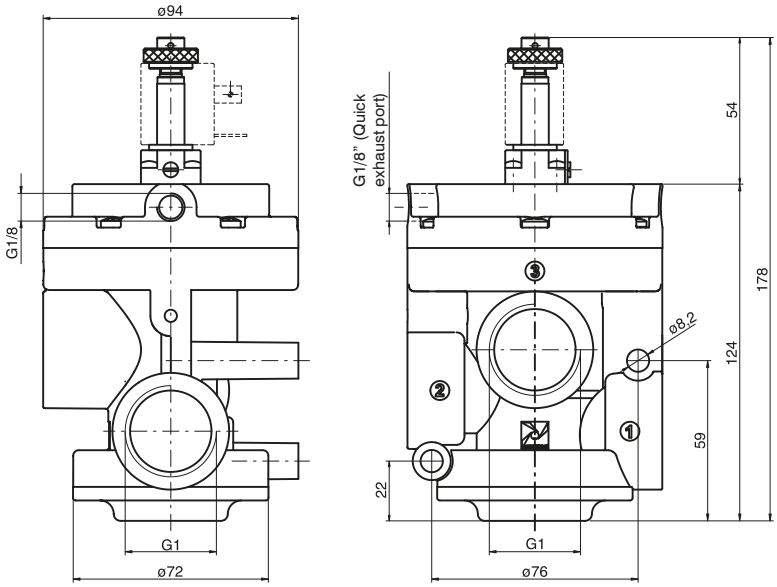

Weight 520 g

For vacuum - N.O.
Pump 3
Outlet port 2
Outlet port 1

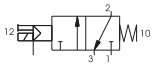

For compressed air - N.C.
Inlet port 1
Outlet port 2
Exhaust port 3

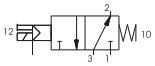

Solenoid - Spring - External pilot with quick exhaust

Coding: T771/VS.32.0.1.MP

Operational characteristics	
Fluid	Vacuum
Minimum piloting pressure (bar)	2
Temperature °C	-5 ÷ +50
Orifice size (mm)	25
Working ports size	G1"
Pilot ports size	G1/8"

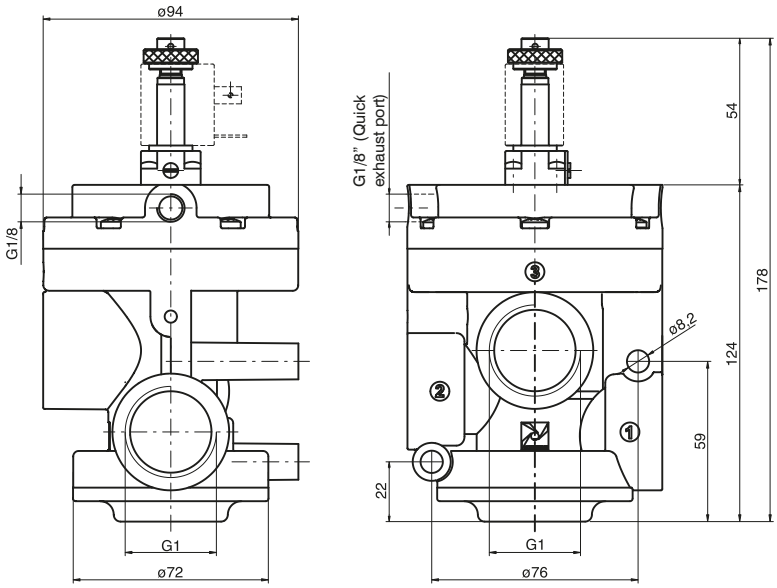

Weight 520 g

For vacuum - N.O.
Pump 3
Outlet port 2
Outlet port 1

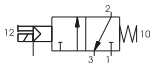

For compressed air - N.C.
Inlet port 1
Outlet port 2
Exhaust port 3

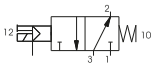

Overall dimensions and technical information are provided solely for informative purposes and may be modified without notice

Bistable for compressed air - G1"

Coding: T771.32.0.1.BP

Operational characteristics	
Fluid	Filtered air. No lubrication needed, if applied it shall be continuous
Max working pressure (bar)	10
Minimum piloting pressure (bar)	2.5
Temperature °C	-5 ÷ +50
Flow rate at 6 bar with Δp=1 (Nl/min)	12500
Orifice size (mm)	25
Working ports size	G1"
Pilot ports size	G1/8"

Weight 680 g

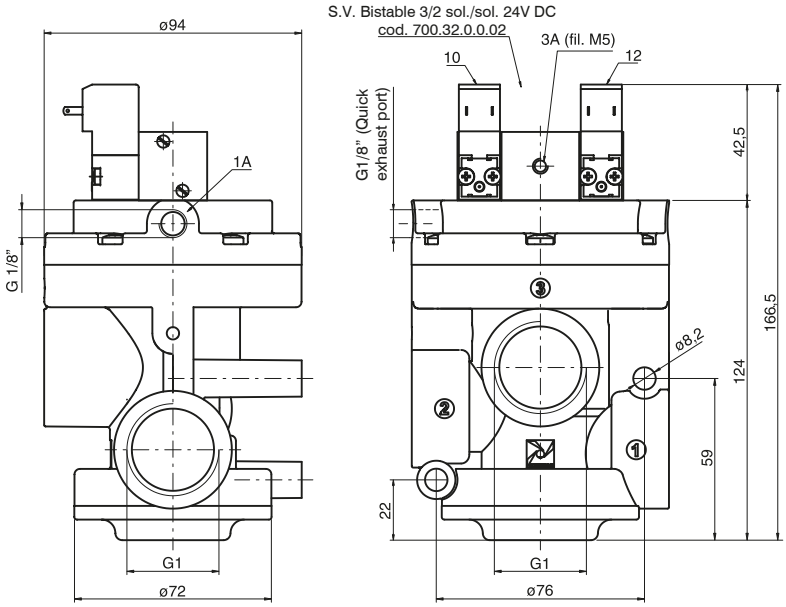

Minimum piloting pressure 2.5 bar

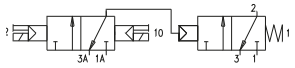

For compressed air - N.C.
Inlet port 1
Outlet port 2
Exhaust port 3

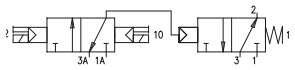

Bistable for compressed air with quick exhaust - G1"

Coding: T771S.32.0.1.BP

Operational characteristics	
Fluid	Filtered air. No lubrication needed, if applied it shall be continuous
Max working pressure (bar)	10
Minimum piloting pressure (bar)	2.5
Temperature °C	-5 ÷ +50
Flow rate at 6 bar with Δp=1 (Nl/min)	12500
Orifice size (mm)	25
Working ports size	G1"
Pilot ports size	G1/8"

Weight 680 g

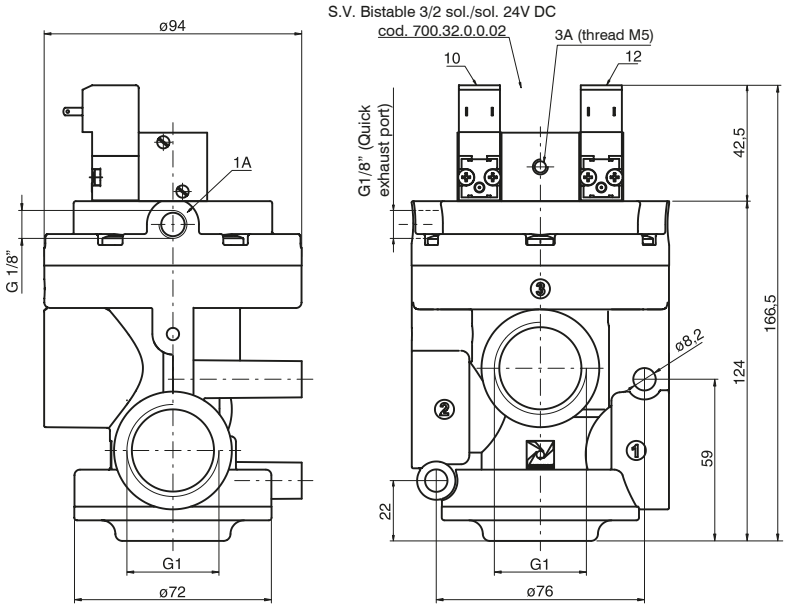

For compressed air - N.C.
Inlet port 1
Outlet port 2
Exhaust port 3

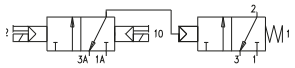

For compressed air - N.O.
Inlet port 3
Outlet port 2
Outlet port 1

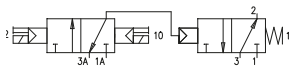

Bistable for vacuum - G1"

Coding: T771/V.32.0.1.BP

Operational characteristics	
Fluid	Vacuum
Minimum piloting pressure (bar)	2,5
Temperature °C	-5 ÷ +50
Orifice size (mm)	25
Working ports size	G1"
Pilot ports size	G1/8"

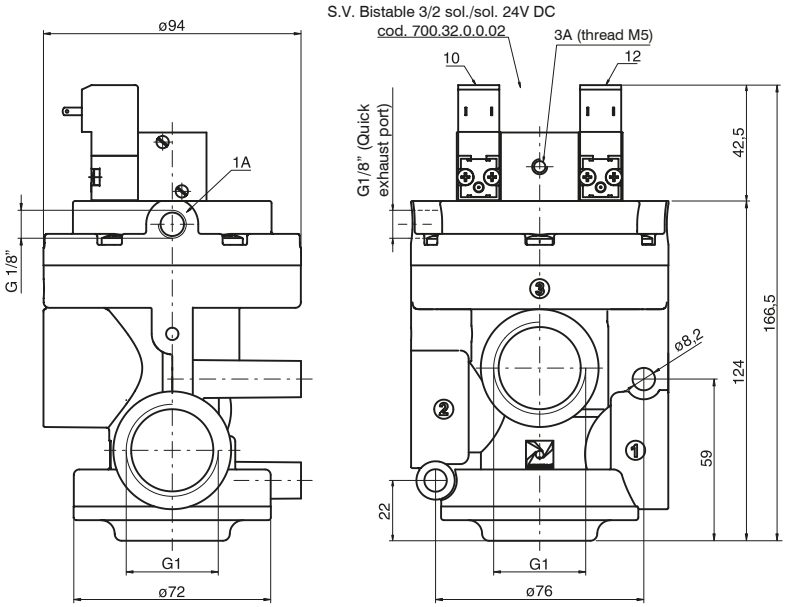

Minimum piloting pressure 2.5 bar

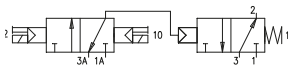

For vacuum - N.C.
Pump 1
Outlet port 2
Exhaust port 3

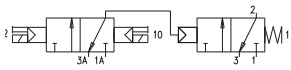

Weight 680 g

Bistable for vacuum with quick exhaust - G1"

Coding: T771/VS.32.0.1.BP

Operational characteristics	
Fluid	Vacuum
Minimum piloting pressure (bar)	2,5
Temperature °C	-5 ÷ +50
Orifice size (mm)	25
Working ports size	G1"
Pilot ports size	G1/8"

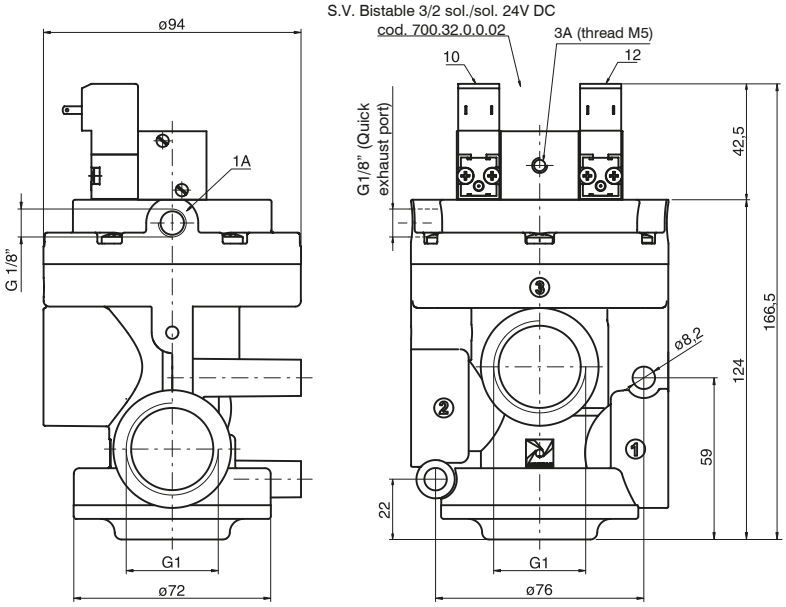

For vacuum - N.O.
Pump 3
Outlet port 2
Outlet port 1

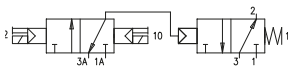

For vacuum - N.C.
Pump 1
Outlet port 2
Exhaust port 3

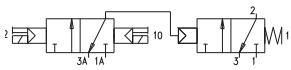

Weight 680 g

Overall dimensions and technical information are provided solely for informative purposes and may be modified without notice

Series PVA - Pad valve for air 2/2

General

Pad Valves offer a reliable and economic solution to fluid control. The valve is manufactured with a 2 way Bronze body and actuated pneumatically using either a single or double acting compact cylinder which can be rotated 360°.

Versions are available with NBR, FPM or PTFE valve seals.

The barrel profile allows the use of magnetic sensors code "1500._" , "RS._" , "HS._", for slots "A" type. (see the Pneumax Genaral catalogue, chapter 3).

Construction characteristics

Bushing, Bushing pad, Nut pad	Brass
Cylinder	Aluminium alloy Anodized
Rear eye, Piston and Rod bushing	Anodized aluminium
Seals in contact with fluid	NBR, FPM, PTFE
Pneumatic cylinder seals	NBR, FPM, PTFE
Springs	Zinc plated steel
Piston rod	Chromed stainelss steel

Technical characteristics

Pneumatic cylinder fluid	Filtered air. No lubrication needed, if applied it shall be continuous
Valve fluid	Fluid compatible with gasket compounds available
Working pressure (Cylinder) (bar)	10
Temperature °C, non magnetic piston, NBR seals	-10 / + 70
Temperature °C, non magnetic piston, FPM seals	-10 / + 150
Temperature °C, non magnetic piston, PTFE seals	-10 / + 150
Temperature °C, magnetic piston,, NBR, FPM, PTFE seals	-10 / + 70

"T" body version Pad valves

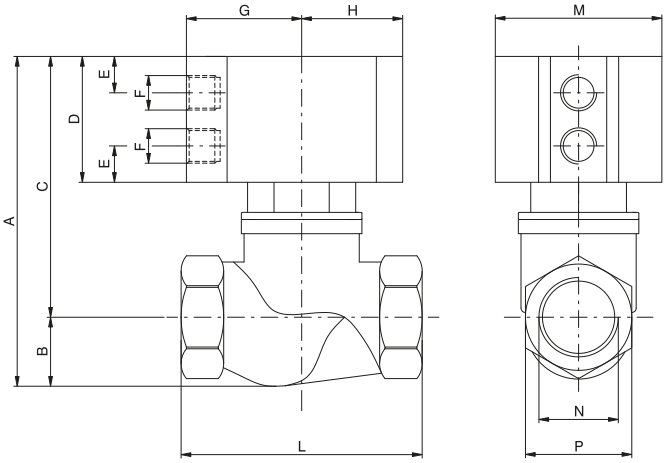

Ordering code	
PVA.B.Ⓐ.Ⓟ.T.Ⓒ.Ⓢ	
Ⓐ	ACTING
	DE=Double acting
	SC=Normally closed
	SA=Normally OPEN
Ⓟ	PISTON
	N=Non magnetic
	M= Magnetic
Ⓒ	CONNECTIONS
	A=G1/4"
	B=G3/8"
	C=G1/2"
	D=G3/4"
	E=G1"
	F=G1 1/4"
	G=G1 1/2"
	H=G2"
Ⓢ	SEALS
	N=NBR
	V=FPM
	F=PTFE

TABLE OF DIMENSIONS

	Non magnetic version			Magnetic version											TECHNICAL DATA		
Connection (N)	A	C	D	A	C	D	B	E	F	G	H	L	M	P	Actuator (Ø)	Nominal Valve (Ø)	Weight (gr.)
G1/4"	93,5	77,5	41	97,5	81,5	45	16	10,25	G1/8"	32,5	28,5	64	47	25	Ø40	Ø13,5	350
G3/8"	93,5	77,5	41	97,5	81,5	45	16	10,25	G1/8"	32,5	28,5	64	47	25	Ø40	Ø13,5	350
G1/2"	93,5	78	41	99,5	82	45	17,5	10,25	G1/8"	32,5	28,5	68	47	30	Ø40	Ø15	400
G 3/4"	105	83	41	113	90	48	22	11,25	G1/8"	44	40	79	70	36	Ø63	Ø20,5	850
G1"	117	89	41	125	101	53	28	11,25	G1/8"	44	40	94	70	44	Ø63	Ø25	1100
G1 1/4"	131	103	48	136	108	53	28	11,25	G1/8"	44	40	110	70	55	Ø63	Ø30	1400
G1 1/2"	154	118	57	166	130	69	36	13,75	G1/8"	56	49	120	90	60	Ø80	Ø38	2100
G2"	169	124	57	181	136	69	45	13,75	G1/8"	56	49	140	90	73	Ø80	Ø49,5	3000

Pad valves, 2-ways, are a reliable and economic solution to control fluid. Pneumatically actuated by a compact double or single acting cylinder with 360° revolving connections.
Standard seals in contact with fluid are made in NBR, FPM or PTFE. The barrel profile allows the use of Pneumax magnetic sensors series 1500 (see the Sensors Section).

Pressure curves

DOUBLE ACTING CYLINDER

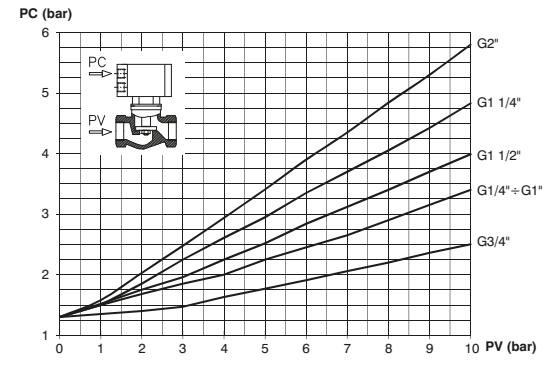

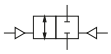

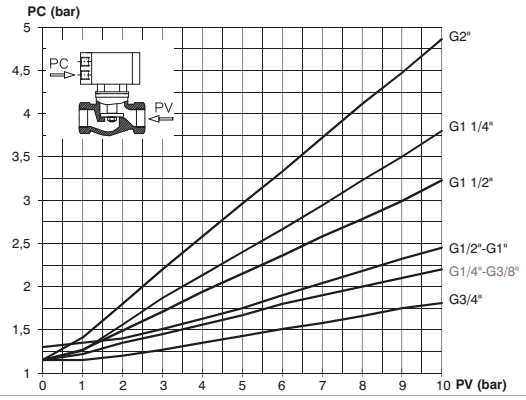

SINGLE ACTING CYLINDER, NORMALLY CLOSED VALVE

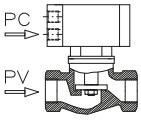

PV max. 2 bar

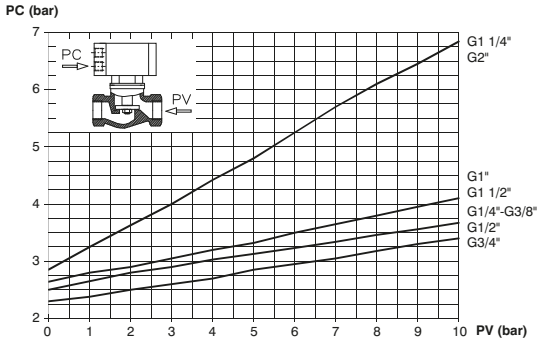

SINGLE ACTING CYLINDER, NORMALLY OPEN VALVE

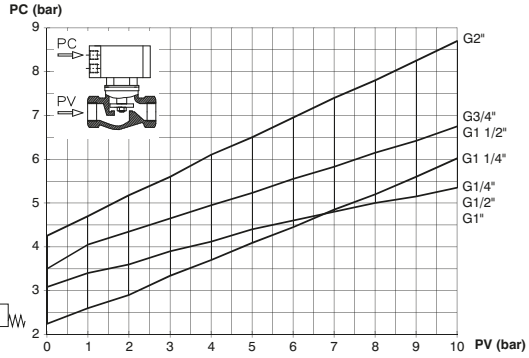

Operational characteristics

- Rear eye, Piston and Rod bushing = Anodized aluminium
- Cylinder = Aluminium alloy Anodized
- Spring = Zinc plated steel
- Seals = NBR, FPM, PTFE
- Piston rod = Chromed stainelss steel
- Bushing, Bushing pad, Nut pad = Brass

Technical characteristics

Fluid	Filtered air. No lubrication needed, if applied it shall be continuous.
Maximum working pressure (bar) 10	10
Temperature °C (non magnetic piston, NBR seals) -5 / + 70	-10 / +70
Temperature °C (non magnetic piston, FPM seals) -5 / + 150	-10 / +150
Temperature °C (non magnetic piston, PTFE seals) -5 / + 150	-10 / +150
Temperature °C (magnetic piston, NBR, FPM, PTFE seals)	-10 / +70

Overall dimensions and technical information are provided solely for informative purposes and may be modified without notice

"Y" body version Pad valves

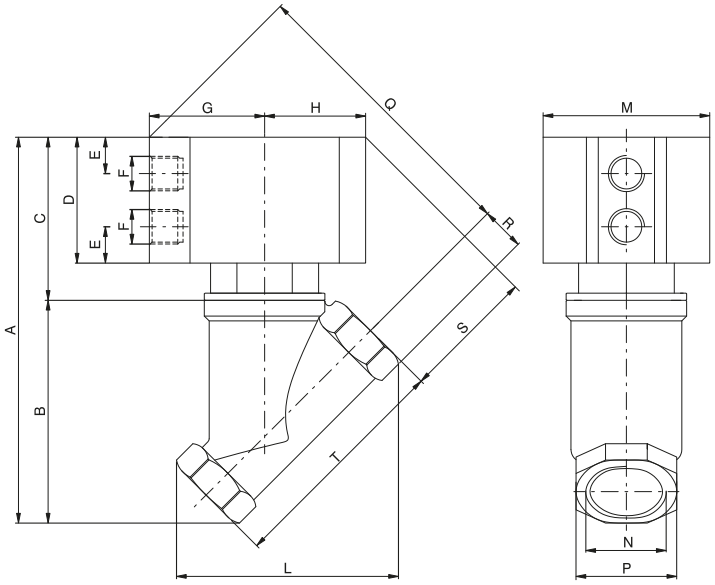

Ordering code	
PVA.B.Ⓐ.Ⓟ.Y.Ⓒ.Ⓢ	
Ⓐ	ACTING
	DE=Double acting
	SC=Normally closed
	SA=Normally OPEN
Ⓟ	PISTON
	N=Non magnetic
	M= Magnetic
Ⓒ	CONNECTIONS
	A=G1/4"
	B=G3/8"
	C=G1/2"
	D=G3/4"
	E=G1"
	F=G1 1/4"
	G=G1 1/2"
	H=G2"
Ⓢ	SEALS
	N=NBR
	V=FPM
	F=PTFE

TABLE OF DIMENSIONS

	Non magnetic version			Magnetic version											TECHNICAL DATA		
Connection (N)	A	C	D	A	C	D	B	E	F	G	H	L	M	P	Actuator (Ø)	Nominal Valve (Ø)	Weight (gr.)
G1/4"	93,5	77,5	41	97,5	81,5	45	16	10,25	G1/8"	32,5	28,5	64	47	25	Ø40	Ø13,5	350
G3/8"	93,5	77,5	41	97,5	81,5	45	16	10,25	G1/8"	32,5	28,5	64	47	25	Ø40	Ø13,5	350
G1/2"	93,5	78	41	99,5	82	45	17,5	10,25	G1/8"	32,5	28,5	68	47	30	Ø40	Ø15	400
G 3/4"	105	83	41	113	90	48	22	11,25	G1/8"	44	40	79	70	36	Ø63	Ø20,5	850
G1"	117	89	41	125	101	53	28	11,25	G1/8"	44	40	94	70	44	Ø63	Ø25	1100
G1 1/4"	131	103	48	136	108	53	28	11,25	G1/8"	44	40	110	70	55	Ø63	Ø30	1400
G1 1/2"	154	118	57	166	130	69	36	13,75	G1/8"	56	49	120	90	60	Ø80	Ø38	2100
G2"	169	124	57	181	136	69	45	13,75	G1/8"	56	49	140	90	73	Ø80	Ø49,5	3000

Pad valves, 2-ways, are a reliable and economic solution to control fluid. Pneumatically actuated by a compact double or single acting cylinder with 360° revolving connections.
Standard seals in contact with fluid are made in NBR, FPM or PTFE. The barrel profile allows the use of Pneumax magnetic sensors series 1500 (see the Sensors Section).

Pressure curves

DOUBLE ACTING CYLINDER

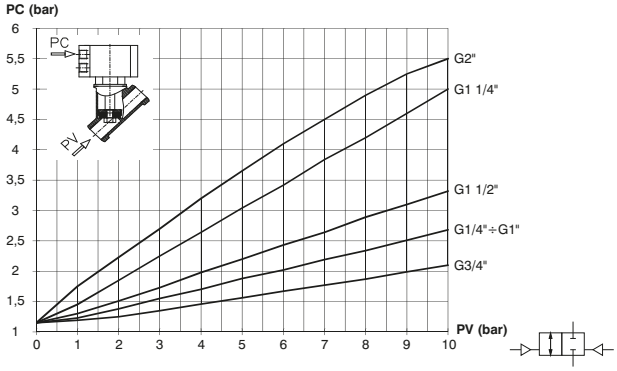

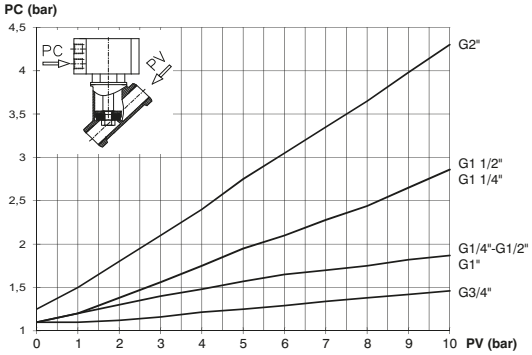

SINGLE ACTING CYLINDER, NORMALLY CLOSED VALVE

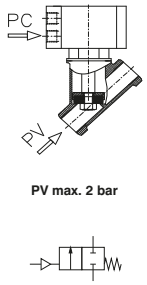

PV max. 2 bar

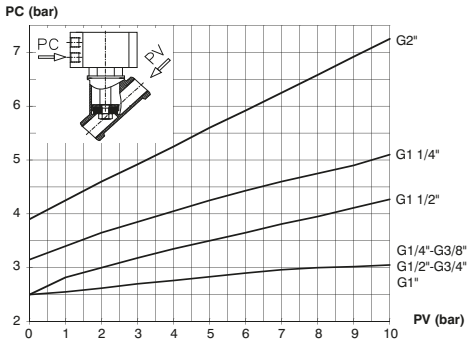

SINGLE ACTING CYLINDER, NORMALLY OPEN VALVE

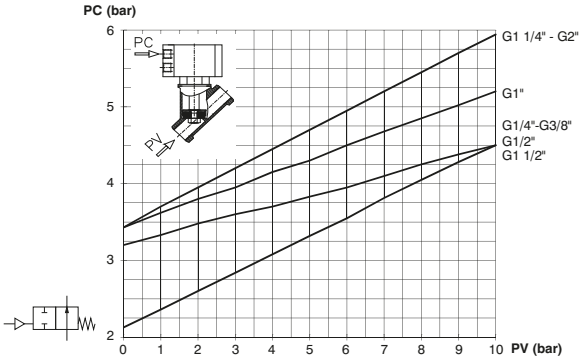

Operational characteristics

- Rear eye, Piston and Rod bushing = Anodized aluminium
- Cylinder = Aluminium alloy Anodized
- Spring = Zinc plated steel
- Seals = NBR, FPM, PTFE
- Piston rod = Chromed stainelss steel
- Bushing, Bushing pad, Nut pad = Brass

Technical characteristics

Fluid	Filtered air. No lubrication needed, if applied it shall be continuous.
Maximum working pressure (bar) 10	10
Temperature °C (non magnetic piston, NBR seals) -5 / + 70	-10 / +70
Temperature °C (non magnetic piston, FPM seals) -5 / + 150	-10 / +150
Temperature °C (non magnetic piston, PTFE seals) -5 / + 150	-10 / +150
Temperature °C (magnetic piston, NBR, FPM, PTFE seals)	-10 / +70

Overall dimensions and technical information are provided solely for informative purposes and may be modified without notice

F300 Series, Solenoid valves for fluids

General details

PNEUMAX offer a vast range of solenoid valves in brass and stainless steel designed to control air, water, steam and all fluids that are compatible with the materials (body and seals) used in the range. The solenoid valves are 2 or 3-way, normally closed, normally open, general service, direct acting or servo-actuated, with connections available in NPT & BSP threads from G1/8" up to G2", with a working pressure range from vacuum to 100 bar. Solenoid valves are available with coils that conform to CESI 03 ATEX 344 certification for explosive environments. Our technical office ensures the highest standard of skill and understanding for the widest variety of applications, ensuring that the best possible solutions are found.

Versions manufactured

Direct action 2-way: 2-way solenoid valves have an input connection and an output connection machined in the valve body, the orifice being intercepted by the plunger mounted in the core tube.

They can be **normally closed (2/2 NC)**, in this case the fluid is intercepted by the plunger at rest, with electricity applied, the input orifice is opened and the media reaches the intended use.

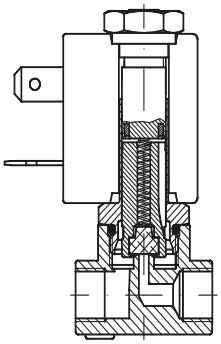

They can be **normally open (2/2 NO)**, in this case at rest the orifice remains open without electricity applied, the media reaches the intended use. When electricity is applied the input orifice closes.

Performance in both cases depends solely on the magnetic field produced by the solenoid coil.
The solenoid valves can also work at zero pressure.

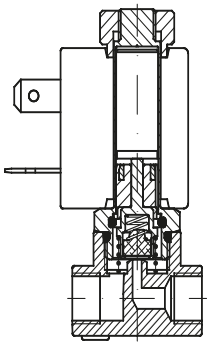

Direct action 3-way: 3-way solenoid valves have an input and an output connection in the valve body and an exhaust connection fitted in the fixed core. The input and exhaust orifices are intercepted directly by the plunger fitted within the core tube.

They can be **normally closed (3/2 NC)** and in this case, at rest, the incoming fluid is intercepted by the plunger and output port in connected to the exhaust port.
Applying electrical power, the input orifice is opened and feed is supplied to the output. Exhaust is closed.

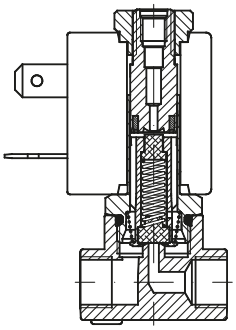

They can be **normally open (3/2 NA)** and in this case, at rest, the input orifice is open without electricity applied, the media reaches the intended use. Exhaust is closed.
Applying power, the input orifice closes and the output discharges through the exhaust port.

Performance in both cases depends solely on the magnetic field produced by the solenoid coil.
The solenoid valves can also work at zero pressure.

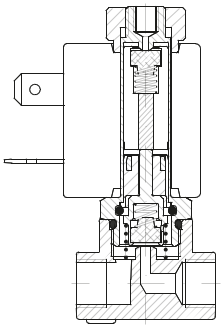

Servo actuated

With large-sized passage orifices, the static pressure value that needs to be overcome by the magnetic field produced by the coil increases.
These solenoid valves are used to control high-pressure values with large diameter bores.
In these models, the fluid helps in the opening or closing of the main plunger.

They can be normally closed (2/2 NC) and have an input and a utilisation connection machined into the valve body and at rest the fluid is intercepted by the main plunger, which can be either diaphragm or a piston. In this condition, the fluid acts on both faces of the main plunger though a pinhole contributing to closure of the plunger.
Applying electrical power, the secondary, or pilot, orifice opens leading to the exhaust of the fluid, which acts to close the main plunger. Greater force is thus applied when opening, the plunger is raised from the orifice and allows the media to flows to the output.
In these versions, performance does not depend solely on the magnetic field produced by the coil; a minimum input pressure is also needed so as to move the diaphragm or the piston overcoming its rigidity and to keep it raised from the main orifice. (Δp minimum performance).

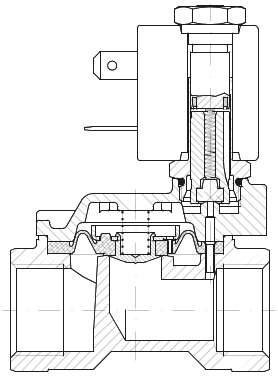

They can be **normally open (2/2 NA)**, and have an input and output connection machined into the valve body, and at rest the secondary plunger communicates with output, a minimum-pressure difference between the feed and the output causes the main shutter to rise, leading to it opening.
Applying electrical power, the secondary orifice closes and equilibrium between the pressure on the two faces of the main shutter is reinstated, and so it returns to its closed position on the main orifice.
In this version a minimum working pressure is also needed.

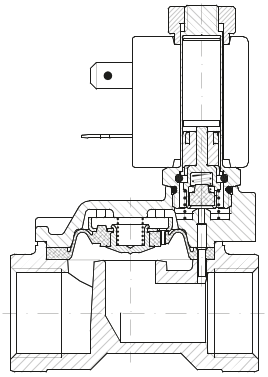

Sealing materials

Designation	Trade names	General characteristics	Field of use
FPM (Fluorocarbon	VITON TECNOFLON FLUOREL	A synthetic hexa-fluoropropylene-based elastomer. Excellent resistance to high temperatures. Excellent resistance to ozone, oxygen, mineral oils, synthetic hydraulic fluids, fuels, hydrocarbons and many chemical products. Not specific for superheated steam.	For general use up to 130 °C

Overall dimensions and technical information are provided solely for informative purposes and may be modified without notice

Resistance to fluids

The table below serves to general information relating to the compatibility between FPM (fluorocarbon) and a number of neutral fluids. Where there are corrosive fluids, in order to establish compatibility, it is important to be aware of all the data relating to use: temperature, concentration and composition of the fluid.

Fluido	
Ethyl acetate	Non Compatible
Acetylene	Compatible
Vinegar	Non Compatible
Acetone	Non Compatible
Calcareous water	Compatible
Hot water <75°C	Compatible
Hot water and steam <140°C	Non Compatible
Water with glycol	Compatible
Deionised water	Compatible
Demineralised water	Compatible
Hydrogen peroxide	Compatible
Soapy water	Compatible
Carbon dioxide (liquid)	Non Compatible
Dry carbon dioxide (gas)	Compatible
Argon	Compatible
Nitrogen	Compatible
Petrol/Gasoline	Compatible
Benzol	Non Compatible
Butane	Compatible
Chloroform	Non Compatible
Ethyl Chloride	Compatible
Methyl chloride	Non Compatible
Helium	Compatible
Heptane	Compatible
Hexane	Compatible
Ethane	Compatible
Ethanol	Non Compatible
Formaldehyde	Compatible
Freon	Non Compatible
Natural gas	Compatible
Diesel oil	Compatible
Glycerine	Compatible
Ethylene glycol	Compatible
Hydrogen	Compatible
Isobutane	Compatible
Isopentane	Compatible
Methane	Compatible
Methanol	Non Compatible
Calcium monoxide	Compatible
Neon	Compatible
Nitrobenzene	Non Compatible
Mineral oil	Compatible
Oxygen	Compatible
Pentane-n	Compatible
Propanol-n	Compatible
Propane-n	Compatible
Carbon sulphide	Non Compatible
Toluene	Compatible
Dry trichloroethylene	Compatible
Xylene	Compatible

2-way solenoid normally closed valve, direct plunger operation

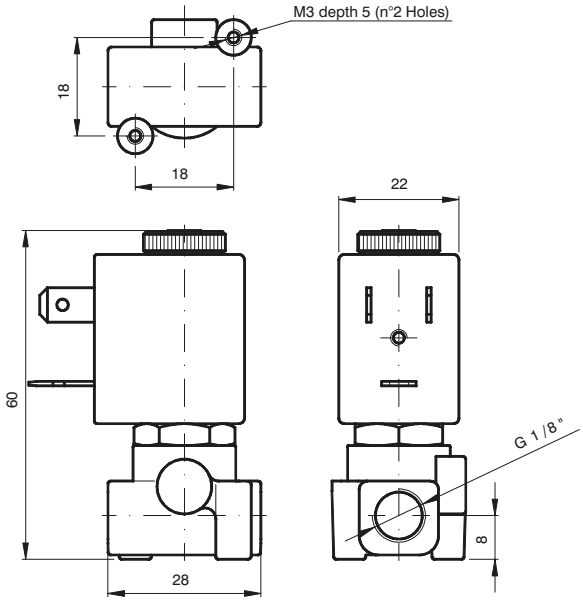

CODE "V"=Seals in FPM ❻ = Coil	Connection G ISO 228	Orifice (mm)	KV (m³/h)	Differential pressure (bar)			Power Consumption			Coil ❻		Temp. range (°C)
				Min	Max		AC Inrush	VA Holding	DC Watt	Series	Size	
					AC	DC						
F3105AV25❻	1/8"	2,5	0,14	0	8	5,5	12	8	6,5	MI	22	-10 +130

N.B. For use with steam, maximum admitted pressure PS is 6 bar (relative pressure) with seals in FPM
Esempio: F3105AV25❻ => F3105AV25MI58:
2-way normally closed, direct acting solenoid valve with G connector (ISO228) 1/8", Seals in FPM, Orifice 2,5 mm, Coil 220V 50/60Hz (MI58, size 22).

Pneumatic symbol

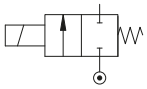

Diagram

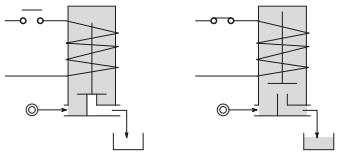

Operational characteristic

- Brass Body
- Guide pipe in Brass
- Mobile and fixed core in Stainless Steel
- Springs in Stainless Steel
- Sealing assemblies in FPM

- OPTIONS (if requested):
- Manual operation
- Surface treatment in chemical nickel-plating
- Guide pipe in Stainless Steel
- For use with oxygen

Technical characteristic

Maximum admitted pressure (bar)	50
Maximum fluid viscosity (mm ²/s)	25cSt
Ambient temperature: with class F coil (°C)	-10 +55
Mounting position	indifferent
Weight (gr.) with MI Series Coil	130

Overall dimensions and technical information are provided solely for informative purposes and may be modified without notice

2-way solenoid normally closed valve, direct plunger operation

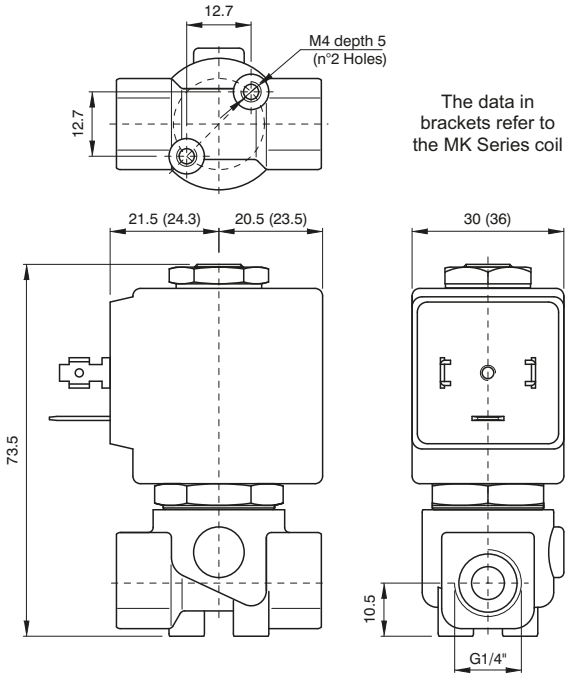

CODE "V"=Seals in FPM ❸ = Coil	Connection G ISO 228	Orifice (mm)	KV (m³/h)	Differential pressure (bar) Min	Max AC	Max DC	Power Consumption AC Inrush	VA Holding	DC Watt	Coil ❸ Series	Size	Temp. range (°C)
F3106BV15❸	1/4"	1,5	0,07	0	30	26	20	15	10	MG	30	-10 +140
F3106BV20❸	1/4"	2,0	0,1	0	22	20	20	15	10	MG	30	
F3106BV25❸	1/4"	2,5	0,15	0	16	14	20	15	10	MG	30	
F3106BV35❸	1/4"	3,5	0,32	0	10	8	20	15	10	MG	30	
F3106BV45❸	1/4"	4,5	0,41	0	6,5	3,5	20	15	10	MG	30	
F3106BV52❸	1/4"	5,2	0,47	0	4	1,8	20	15	10	MG	30	
F3106BV64❸	1/4"	6,4	0,64	0	3	1	20	15	10	MG	30	
F3106BV15❸	1/4"	1,5	0,07	0	80	80	40	30	27	MK	36	
F3106BV20❸	1/4"	2,0	0,1	0	50	40	40	30	27	MK	36	
F3106BV25❸	1/4"	2,5	0,15	0	35	33	40	30	27	MK	36	
F3106BV35❸	1/4"	3,5	0,32	0	20	19	40	30	27	MK	36	
F3106BV45❸	1/4"	4,5	0,41	0	14	13	40	30	27	MK	36	
F3106BV52❸	1/4"	5,2	0,47	0	10	9	40	30	27	MK	36	
F3106BV64❸	1/4"	6,4	0,64	0	5	4,5	40	30	27	MK	36	

N.B. For use with steam, maximum admitted pressure PS is 6 bar (relative pressure) with seals in PTFE and 2.5 bar with seals in EPDM.
Example: F3106BV52❸ => F3106BV52MG58:
2-way normally closed, direct acting solenoid valve with G connector (ISO228) 1/4”, Seals in FPM, Orifice 5.2 mm, Coil 220V 50/60Hz (MG58, size 30).

Pneumatic symbol

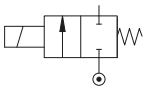

Diagram

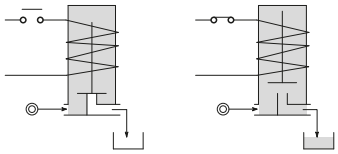

Operational characteristic

- Brass Body
- Guide pipe in Stainless Steel
- Mobile and fixed core in Stainless Steel
- Springs in Stainless Steel
- Sealing assemblies in FPM

- OPTIONS (if requested):
- Manual operation
- Surface treatment in chemical nickel-plating
- Inserted stainless steel seating
- For use with oxygen

Technical characteristic

Maximum admitted pressure (bar)	80
Maximum fluid viscosity (mm ²/s)	25cSt
Ambient temperature: with class F coil (°C)	-10 +55
Ambient temperature: with class H coil (°C)	-10 +80
Mounting position	indifferent
Weight (gr.) with MG Series Coil	300
Weight (gr.) with MK Series Coil	380

2-way solenoid normally closed valve, direct plunger operation

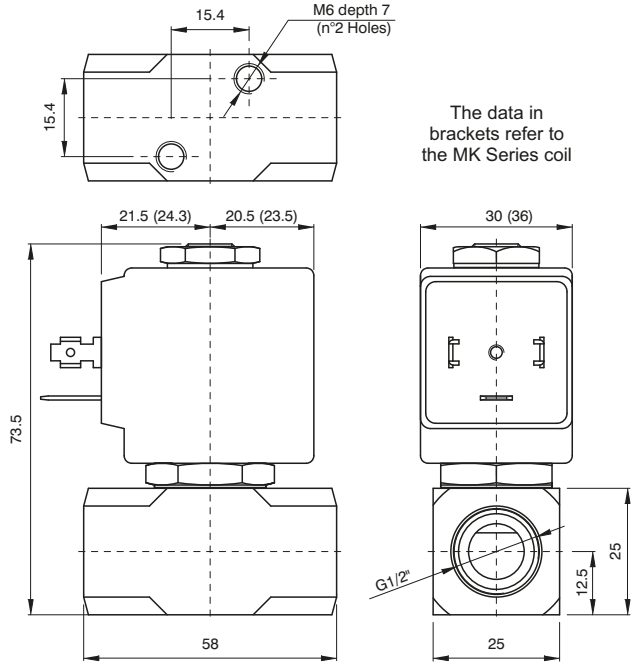

CODE "V"=Seals in FPM ❸ = Coil	Connection G ISO 228	Orifice (mm)	KV (m³/h)	Differential pressure (bar)			Power Consumption			Coil ❸		Temp. range (°C)
				Min	Max		AC Inrush	VA Holding	DC Watt	Series	Size	
					AC	DC						
F3106DV45❸	1/2"	4,5	0,41	0	6,5	3,5	20	15	10	MG	30	-10 +140
F3106DV52❸	1/2"	5,2	0,47	0	4	1,8	20	15	10	MG	30	
F3106DV64❸	1/2"	6,4	0,64	0	3	1	20	15	10	MG	30	
F3106DV45❸	1/2"	4,5	0,41	0	14	13	40	30	27	MK	36	
F3106DV52❸	1/2"	5,2	0,47	0	10	9	40	30	27	MK	36	
F3106DV64❸	1/2"	6,4	0,64	0	5	4,5	40	30	27	MK	36	

N.B. For use with steam, maximum admitted pressure PS is 6 bar (relative pressure) with seals in PTFE and 2.5 bar with seals in EPDM.
Example: F3106DV52❸ => F3106DV52MK5:
2-way normally closed, direct acting solenoid valve with G connector (ISO228) 1/2", Seals in FPM, Orifice 5.2 mm, Coil 24V DC (MK5, size 36).

Pneumatic symbol

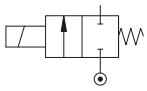

Diagram

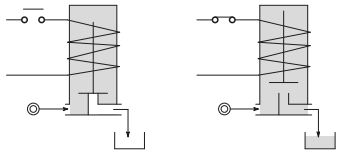

Operational characteristic

- Brass Body
- Guide pipe in Stainless Steel
- Mobile and fixed core in Stainless Steel
- Springs in Stainless Steel
- Sealing assemblies in FPM

- OPTIONS (if requested):
- Manual operation
- Surface treatment in chemical nickel-plating
- For use with oxygen

Technical characteristic

Maximum admitted pressure (bar)	80
Maximum fluid viscosity (mm ²/s)	25cSt
Ambient temperature: with class F coil (°C)	-10 +55
Ambient temperature: with class H coil (°C)	-10 +80
Mounting position	indifferent
Weight (gr.) with MG Series Coil	300
Weight (gr.) with MK Series Coil	380

Overall dimensions and technical information are provided solely for informative purposes and may be modified without notice

2-Way normally closed solenoid valve, servo-actuated diaphragm

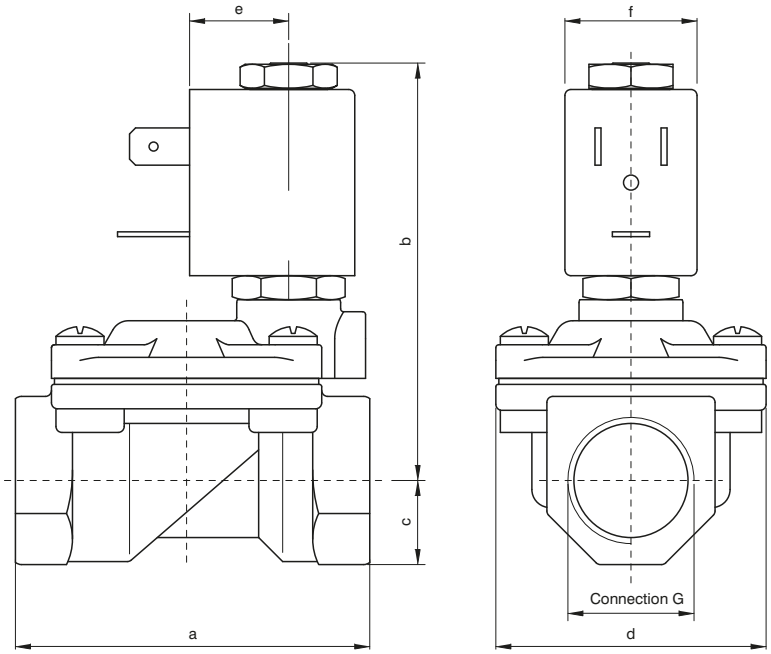

Connection	a	b	c	d	e	f	Weight (g)
G1/4" Ø10	49	65	11	32	16	22	230
G3/8" Ø12	59	70	14	45	16	22	420
G1/2" Ø12	59	70	14	45	16	22	390
G3/4"	79	76	18	55	16	22	650
G1"	96	85	20	72	16	22	1050
G1" 1/4	119	92	25	85	16	22	1700

CODE "V"=Seals in FPM ❻ = Coil	Connection G ISO 228	Orifice (mm)	KV (m³/h)	Differential pressure (bar)			Power Consumption			Coil ❻		Temp. range (°C)
				Min	Max		AC Inrush	VA Holding	DC Watt	Series	Size	
					AC	DC						
F3107BV10❻	1/4"	10	1,5	0,15	15	15	12	8	6,5	MI	22	-10 +140
F3107CV12❻	3/8"	12	2,2	0,15	15	15	12	8	6,5	MI	22	
F3107DV12❻	1/2"	12	2,5	0,15	15	15	12	8	6,5	MI	22	
F3107EV18❻	3/4"	18	5,5	0,15	13	13	12	8	6,5	MI	22	
F3107FV25❻	1"	24	10,2	0,15	10	10	12	8	6,5	MI	22	
F3107GV30❻	1"1/4	30	15	0,15	10	10	12	8	6,5	MI	22	

N.B. For use with steam maximum admitted pressure PS is 2.5 bar (relative pressure)
Example: F3107BV10❻ => F3107BV10MI5:
2-Way normally closed solenoid valve, servo-actuated diaphragm with Connector G (ISO228) 1/4", Seals in FPM, Orifice 10 mm, Coil 24V DC (MI5, size 22).

Pneumatic symbol

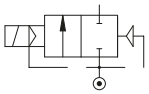

Diagram

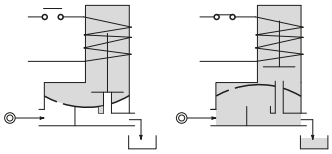

Operational characteristic

- Body and cover in Brass
- Guide pipe in Stainless Steel
- Mobile and fixed core in Stainless Steel
- Springs in Stainless Steel
- Sealing assemblies in FPM

- OPTIONS (if requested):
- Manual operation
- Surface treatment in chemical nickel-plating
- Coil for potentially explosive environments meeting 'ATEX standards Ex m Serie XME'.
- Version with slowed commutation
- Version for vacuum (air/gas)
- Version for use with oxygen
- "SVGW/SSIGE" approved versions.

Technical characteristic

Minimum differential pressure (bar)	0,15
Maximum admitted pressure (bar)	25
Maximum fluid viscosity (mm ²/s)	25cSt
Ambient temperature: with class F coil (°C)	-10 +55
Ambient temperature: with class H coil (°C)	-10 +80
Mounting position	Preferably with coil upwards

2-Way normally closed solenoid valve, servo-actuated diaphragm

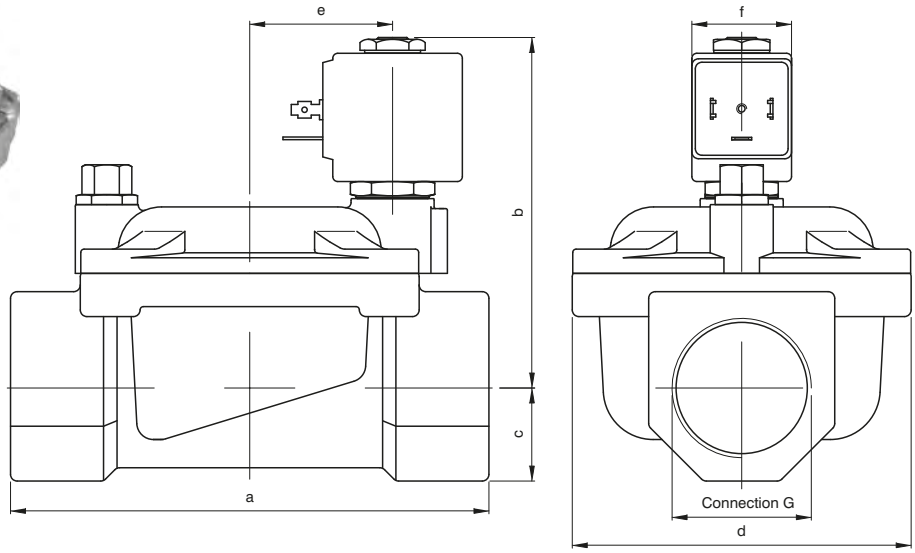

Connection	a	b	c	d	e	f	Weight (g)
G1" 1/4	142	105	28	102	21	30	3000
G1" 1/2	142	105	28	102	21	30	2850
G2"	158	115	35	119	21	30	4300

CODE "V"=Seals in FPM ❸ = Coil	Connection G ISO 228	Orifice (mm)	KV (m³/h)	Differential pressure (bar)			Power Consumption			Coil ❸		Temp. range (°C)
				Min	Max		AC Inrush	VA Holding	DC Watt	Series	Size	
					AC	DC						
F3107GV37❸	1 1/4"	37	18	0,15	10	10	20	15	10	MG	30	-10 +140
F3107HV37❸	1" 1/2"	37	21	0,15	10	10	20	15	10	MG	30	
F3107IV50❸	2"	50	36	0,15	10	10	20	15	10	MG	30	

N.B. For use with steam maximum admitted pressure PS is 2.5 bar (relative pressure)
Example: F3107GV37❸ => F3107GV37MG5:
2-Way normally closed solenoid valve, servo-actuated diaphragm with Connector G (ISO228) 1" 1/4", Seals in FPM, Orifice 37 mm, Coil 24V DC (MG5, size 30).

Pneumatic symbol

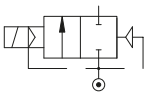

Diagram

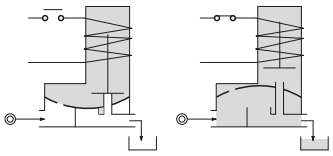

Operational characteristic

- Body and cover in Brass
- Guide pipe in Stainless Steel
- Mobile and fixed core in Stainless Steel
- Springs in Stainless Steel
- Sealing assemblies in FPM

- OPTIONS (if requested):
- Manual operation
- Surface treatment in chemical nickel-plating
- Version for vacuum (air/gas)

Technical characteristic

Minimum differential pressure (bar)	0,15 ÷ 3
Maximum admitted pressure (bar)	80
Maximum fluid viscosity (mm ²/s)	25cSt
Ambient temperature: with class F coil (°C)	-10 +55
Ambient temperature: with class H coil (°C)	-10 +80
Mounting position	Preferably with coil upwards

Overall dimensions and technical information are provided solely for informative purposes and may be modified without notice

2-way solenoid normally closed valve, direct plunger operation

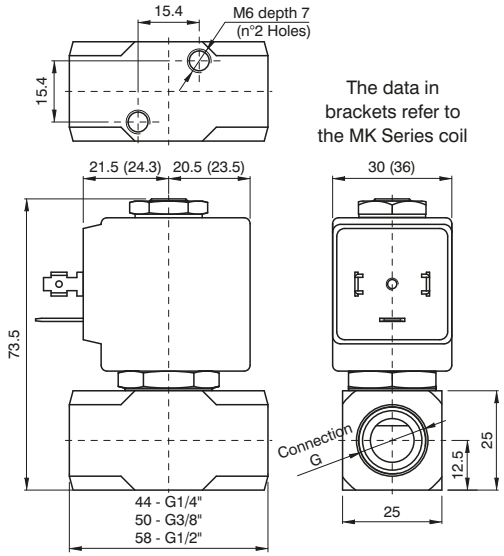

CODE "V"=Seals in FPM ⒷⒷ = Coil	Connection G ISO 228	Orifice (mm)	KV (m³/h)	Differential pressure (bar) Min	Max AC	Max DC	Power Consumption AC Inrush	VA Holding	DC Watt	Coil ⒷⒷ Series	Size	Temp. range (°C)
F3110BV25ⒷⒷ	1/4"	2,5	0,15	0	16	14	20	15	10	MG	30	-10 +140
F3110BV35ⒷⒷ	1/4"	3,5	0,32	0	10	8	20	15	10	MG	30	
F3110BV45ⒷⒷ	1/4"	4,5	0,41	0	6,5	3,5	20	15	10	MG	30	
F3110CV35ⒷⒷ	3/8"	3,5	0,32	0	10	8	20	15	10	MG	30	
F3110CV52ⒷⒷ	3/8"	5,2	0,47	0	4	1,8	20	15	10	MG	30	
F3110DV35ⒷⒷ	1/2"	3,5	0,32	0	10	8	20	15	10	MG	30	
F3110DV52ⒷⒷ	1/2"	5,2	0,47	0	4	1,8	20	15	10	MG	30	
F3110DV64ⒷⒷ	1/2"	6,4	0,64	0	3,5	1	20	15	10	MG	30	
F3110BV25ⒷⒷ	1/4"	2,5	0,15	0	35	33	40	30	27	MK	36	
F3110BV35ⒷⒷ	1/4"	3,5	0,32	0	20	19	40	30	27	MK	36	
F3110BV45ⒷⒷ	1/4"	4,5	0,41	0	14	13	40	30	27	MK	36	
F3110CV35ⒷⒷ	3/8"	3,5	0,32	0	20	19	40	30	27	MK	36	
F3110CV52ⒷⒷ	3/8"	5,2	0,47	0	10	9	40	30	27	MK	36	
F3110DV35ⒷⒷ	1/2"	3,5	0,32	0	20	19	40	30	27	MK	36	
F3110DV52ⒷⒷ	1/2"	5,2	0,47	0	10	9	40	30	27	MK	36	
F3110DV64ⒷⒷ	1/2"	6,4	0,64	0	5	4,5	40	30	27	MK	36	

N.B. For use with steam, maximum admitted pressure PS is 6 bar (relative pressure)
Example: F3110BV25ⒷⒷ => F3110BV25MG5:
2-way solenoid normally closed valve, direct plunger operation with Connector G (ISO228) 1/4", Seals in FPM, Orifice 2,5 mm, Coil 24V DC (MG5, size 30).

Pneumatic symbol

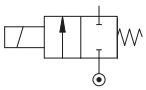

Diagram

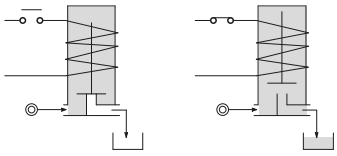

Operational characteristic

- Stainless Steel Body
- Guide pipe in Stainless Steel
- Mobile and fixed core in Stainless Steel
- Springs in Stainless Steel
- Sealing assemblies in FPM

- OPTIONS (if requested):
- Manual operation
- Advance ring in silver
- For use with oxygen

Technical characteristic

Maximum admitted pressure (bar)	100
Maximum fluid viscosity (mm ²/s)	25cSt
Ambient temperature: with class F coil (°C)	-10 +55
Ambient temperature: with class H coil (°C)	-10 +80
Mounting position	indifferent
Weight (gr.) with MG Series Coil	360
Weight (gr.) with MK Series Coil	440

2-way solenoid normally closed valve, direct plunger operation

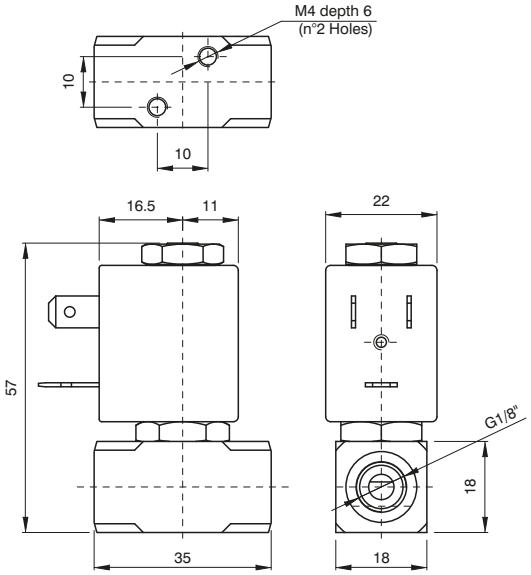

CODE "V"=Seals in FPM ❸ = Coil	Connection G ISO 228	Orifice (mm)	KV (m³/h)	Differential pressure (bar) Min	Max AC	Max DC	Power Consumption AC Inrush	VA Holding	DC Watt	Coil ❸ Series	Size	Temp. range (°C)
F3111AV12❸	1/8"	1,2	0,04	0	25	25	12	8	6,5	MI	22	-10 +140
F3111AV15❸	1/8"	1,5	0,06	0	16	16	12	8	6,5	MI	22	
F3111AV20❸	1/8"	2	0,09	0	12	10	12	8	6,5	MI	22	

N.B. For use with steam, maximum admitted pressure PS is 6 bar (relative pressure)
Example: F3111AV12❸ => F3111AV12MI56:
2-way solenoid normally closed valve, direct plunger operation with Connector G (ISO228) 1/8", Seals in FPM, Orifice 1,2 mm, Coil 24V 50/60Hz (MI56, size 22).

Pneumatic symbol

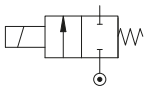

Diagram

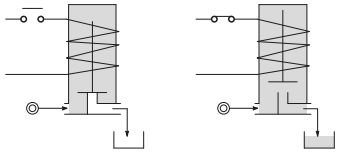

Operational characteristic

- Stainless Steel Body
- Guide pipe in Stainless Steel
- Mobile and fixed core in Stainless Steel
- Springs in Stainless Steel
- Sealing assemblies in FPM

- **OPTIONS (if requested):**
- Advance ring in silver
- Coil for potentially explosive environments meeting 'ATEX standards Ex m Serie XME'.
- For use with oxygen

Technical characteristic

Maximum admitted pressure (bar)	50
Maximum fluid viscosity (mm ²/s)	25cSt
Ambient temperature: with class F coil (°C)	-10 +55
Ambient temperature: with class H coil (°C)	-10 +80
Mounting position	indifferent
Weight (g.)	150

Overall dimensions and technical information are provided solely for informative purposes and may be modified without notice

2-way normally closed diaphragm solenoid valve in stainless steel AISI 316, servo-actuated

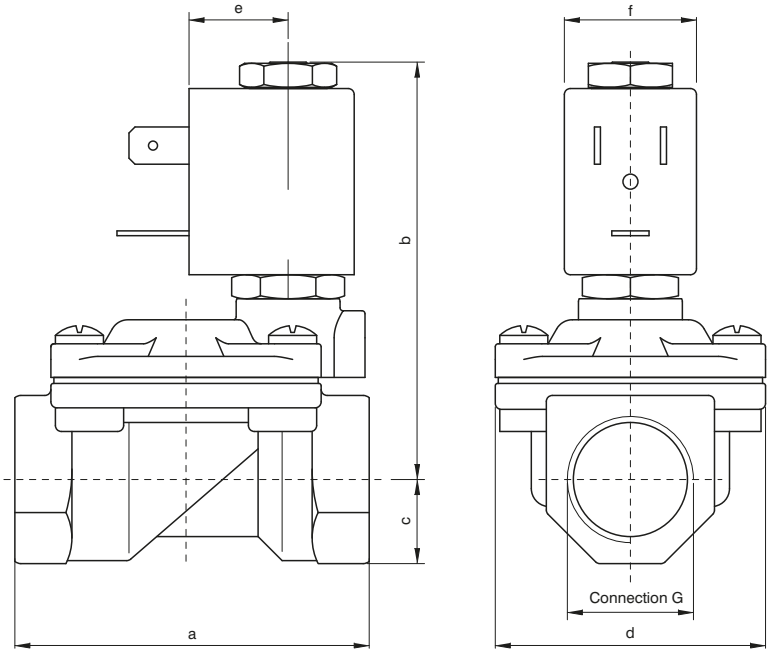

Connection	a	b	c	d	e	f	Weight (g)
G3/8"	59	70	11	45	16	22	300
G1/2"	59	70	13	45	16	22	320
G3/4"	80	75	16	55	16	22	550
G1"	100	84	20	72	16	22	950

CODE "V"=Seals in FPM Ⓑ = Coil	Connection G ISO 228	Orifice (mm)	KV (m^3/h)	Differential pressure (bar)			Power Consumption			Coil Ⓑ		Temp. range (°C)
				Min	Max		AC Inrush	VA Holding	DC Watt	Series	Size	
					AC	DC						
F3177CV12Ⓑ	3/8"	12	2,2	0,15	15	15	12	8	6,5	MI	22	-10 +140
F3177DV12Ⓑ	1/2"	12	2,5	0,15	15	15	12	8	6,5	MI	22	
F3177EV18Ⓑ	3/4"	18	5,5	0,15	13	13	12	8	6,5	MI	22	
F3177FV25Ⓑ	1"	24	10,2	0,15	10	10	12	8	6,5	MI	22	

N.B. For use with steam maximum admitted pressure PS is 2.5 bar (relative pressure)
Example: F3177CV12Ⓑ => F3177CV12MI5:
2-way normally closed diaphragm solenoid valve in stainless steel AISI 316, servo-actuated with Connector G (ISO228) 3/8", Seals in FPM, Orifice 12 mm, Coil 24V DC (MI5, size 22).

Pneumatic symbol

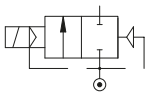

Diagram

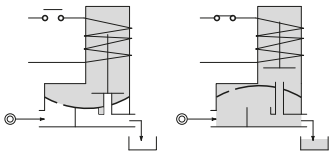

Operational characteristic

- Body and cover in Stainless Steel.
- Guide pipe in Stainless Steel
- Mobile and fixed core in Stainless Steel
- Springs in Stainless Steel
- Sealing assemblies in FPM

- OPTIONS (if requested):
- Manual operation
- Coil for potentially explosive environments meeting 'ATEX standards Ex m Serie XME'.
- Seals for use with foodstuff fluids.
- Version with slowed commutation
- Version for use with oxygen
- Advance ring in silver

Technical characteristic

Minimum differential pressure (bar)	0,15
Maximum admitted pressure (bar)	25
Maximum fluid viscosity (mm ²/s)	25cSt
Ambient temperature: with class F coil (°C)	-10 +55
Ambient temperature: with class H coil (°C)	-10 +80
Mounting position	Preferably with coil upwards

2-way normally open with direct operated plunger solenoid valve

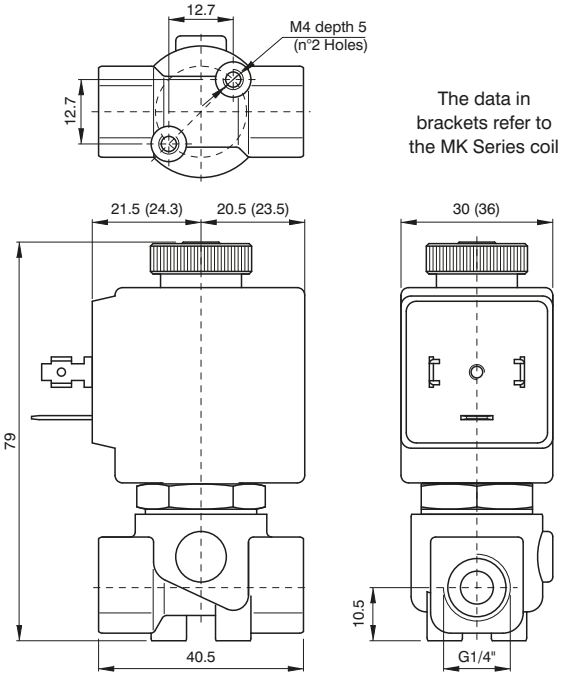

The data in brackets refer to the MK Series coil

CODE "V"=Seals in FPM ❸ = Coil	Connection G ISO 228	Orifice (mm)	KV (m³/h)	Differential pressure (bar) Min	Max AC	Max DC	Power Consumption AC Inrush	VA Holding	DC Watt	Coil ❸ Series	Size	Temp. range (°C)
F3206BV15❸	1/4"	1,5	0,07	0	23	-	20	15	-	MG	30	-10 +140
F3206BV20❸	1/4"	2,0	0,1	0	17	-	20	15	-	MG	30	
F3206BV25❸	1/4"	2,5	0,15	0	12	-	20	15	-	MG	30	
F3206BV35❸	1/4"	3,5	0,32	0	7	-	20	15	-	MG	30	
F3206BV45❸	1/4"	4,5	0,41	0	4,5	-	20	15	-	MG	30	
F3206BV52❸	1/4"	5,2	0,47	0	3	-	20	15	-	MG	30	
F3206BV15❸	1/4"	1,5	0,07	0	23	23	20	15	-	MK	36	
F3206BV20❸	1/4"	2,0	0,1	0	17	17	40	30	27	MK	36	
F3206BV25❸	1/4"	2,5	0,15	0	12	12	40	30	27	MK	36	
F3206BV35❸	1/4"	3,5	0,32	0	7	7	40	30	27	MK	36	
F3206BV45❸	1/4"	4,5	0,41	0	4,5	4,5	40	30	27	MK	36	
F3206BV52❸	1/4"	5,2	0,47	0	3	3	40	30	27	MK	36	
F3206BV64❸	1/4"	6,4	0,64	0	3,5	3,5	40	30	27	MK	36	

N.B. For use with steam maximum admitted pressure PS is 2.5 bar (relative pressure)
Example: F3206BV15❸ => F3206BV15MG58:
2-way normally open with direct operated plunger solenoid valve with Connector G (ISO228) 1/4", Seals in FPM, Orifice 1,5 mm, Coil 220V 50/60Hz (MG58, size 30).

Pneumatic symbol

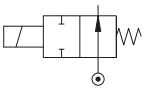

Diagram

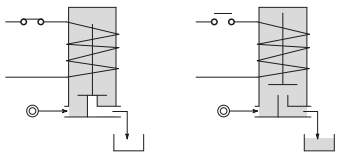

Operational characteristic

- Brass Body.
- Guide pipe in Brass.
- Mobile and fixed core in Stainless Steel
- Springs in Stainless Steel
- Sealing assemblies in FPM

- OPTIONS (if requested):
- Surface treatment in chemical nickel-plating
- Guide pipe in Stainless Steel

Technical characteristic

Maximum admitted pressure (bar)	50
Maximum fluid viscosity (mm ²/s)	25cSt
Ambient temperature: with class F coil (°C)	-10 +55
Ambient temperature: with class H coil (°C)	-10 +80
Mounting position	indifferent
Weight (gr.) with MG Series Coil	300
Weight (gr.) with MK Series Coil	380

Overall dimensions and technical information are provided solely for informative purposes and may be modified without notice

2-way normally open with direct operated plunger solenoid valve

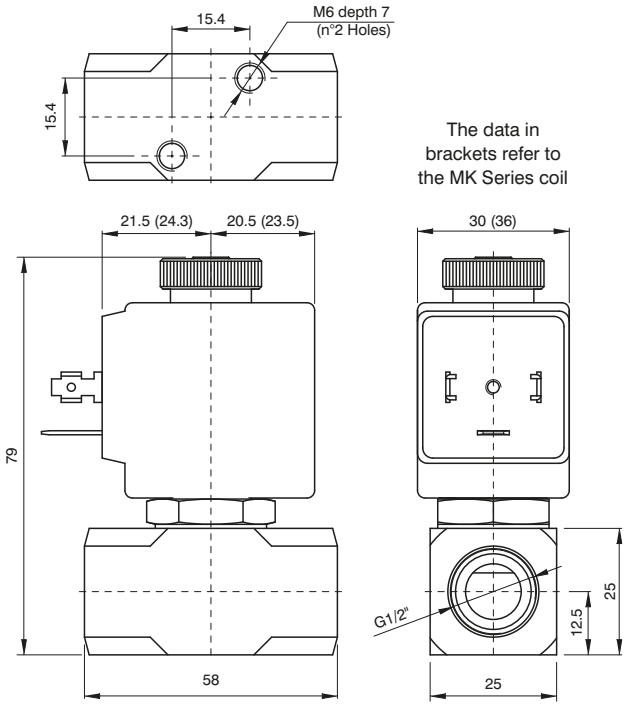

CODE "V"=Seals in FPM Ⓑ = Coil	Connection G ISO 228	Orifice (mm)	KV (m³/h)	Differential pressure (bar)			Power Consumption			Coil Ⓑ		Temp. range (°C)
				Min	Max		AC Inrush	VA Holding	DC Watt	Series	Size	
					AC	DC						
F3206DV52Ⓑ	1/2"	5,2	0,47	0	3	-	20	15	-	MG	30	-10 +140
F3206DV52Ⓑ	1/2"	5,2	0,47	0	3	3	40	30	27	MK	36	
F3206DV64Ⓑ	1/2"	6,4	0,64	0	3,5	3,5	40	30	27	MK	36	

N.B. For use with steam maximum admitted pressure PS is 2.5 bar (relative pressure)
Example: F3206DV30Ⓑ => F3206DV30MG58:
2-way normally open with direct operated plunger solenoid valve with Connector G (ISO228) 1/2", Seals in FPM, Orifice 3 mm, Coil) 220V 50/60Hz (MG58, size 30).

Pneumatic symbol

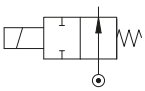

Diagram

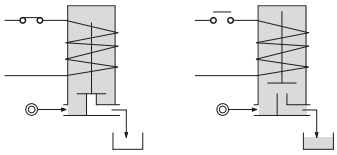

Operational characteristic

- Brass Body.
- Guide pipe in Brass.
- Mobile and fixed core in Stainless Steel
- Springs in Stainless Steel
- Sealing assemblies in FPM

- OPTIONS (if requested):
- Surface treatment in chemical nickel-plating
- Guide pipe in Stainless Steel

Technical characteristic

Maximum admitted pressure (bar)	50
Maximum fluid viscosity (mm ²/s)	25cSt
Ambient temperature: with class F coil (°C)	-10 +55
Ambient temperature: with class H coil (°C)	-10 +80
Mounting position	indifferent
Weight (gr.) with MG Series Coil	360
Weight (gr.) with MK Series Coil	440

2-way normally open servo-actuated diaphragm solenoid valve

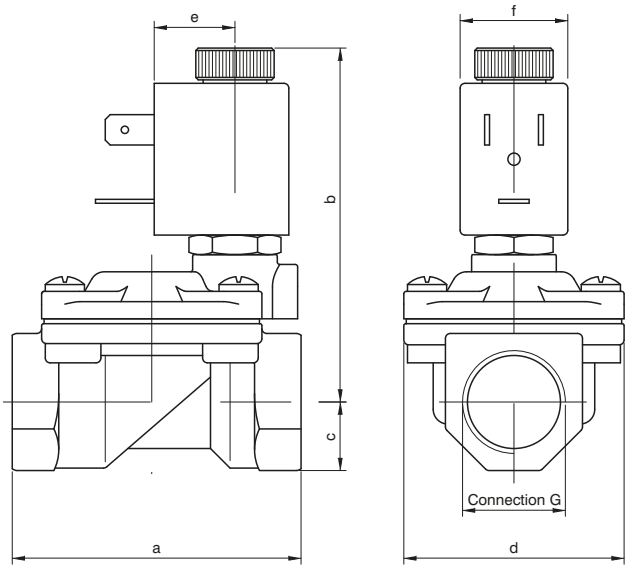

Connection	a	b	c	d	e	f	Weight (g)
G1/4" Ø10	49	69	11	32	16	22	230
G3/8" Ø10	49	69	11	32	16	22	240
G1/2" Ø12	59	74	14	45	16	22	390
G3/4"	79	81	18	55	16	22	650
G1"	96	89	20	72	16	22	1050

CODE "V"=Seals in FPM ❻ = Coil	Connection G ISO 228	Orifice (mm)	KV (m³/h)	Differential pressure (bar)			Power Consumption			Coil ❻		Temp. range (°C)
				Min	Max		AC Inrush	VA Holding	DC Watt	Series	Size	
					AC	DC						
F3207BV10❻	1/4"	10	1,5	0,15	15	15	12	8	6,5	MI	22	-10 +140
F3207CV10❻	3/8"	10	1,7	0,15	15	15	12	8	6,5	MI	22	
F3207DV12❻	1/2"	12	2,5	0,15	15	15	12	8	6,5	MI	22	
F3207EV18❻	3/4"	18	5,5	0,15	13	13	12	8	6,5	MI	22	
F3207FV25❻	1"	24	10,2	0,15	10	10	12	8	6,5	MI	22	

N.B. For use with steam maximum admitted pressure PS is 2.5 bar (relative pressure)
Example: F3207BV10❻ => F3207BV10MI5:
2-way normally open servo-actuated diaphragm solenoid valve with Connector G (ISO228) 1/4", Seals in FPM, Orifice 10 mm, Coil 24V DC (MI5, size 22).

Pneumatic symbol

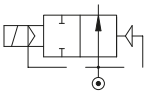

Diagram

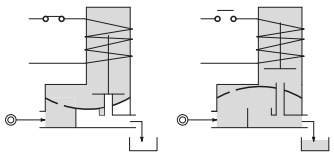

Operational characteristic

- Body and cover in Brass
- Guide pipe in Stainless Steel
- Mobile and fixed core in Stainless Steel
- Springs in Stainless Steel
- Sealing assemblies in FPM

- OPTIONS (if requested):
- Surface treatment in chemical nickel-plating
- Coil for potentially explosive environments meeting 'ATEX standards Ex m Serie XME'.

Technical characteristic

Minimum differential pressure (bar)	0,15
Maximum admitted pressure (bar)	25
Maximum fluid viscosity (mm ²/s)	25cSt
Ambient temperature: with class F coil (°C)	-10 +55
Ambient temperature: with class H coil (°C)	-10 +80
Mounting position	indifferent

Overall dimensions and technical information are provided solely for informative purposes and may be modified without notice

2-way normally open with direct operated plunger solenoid valve

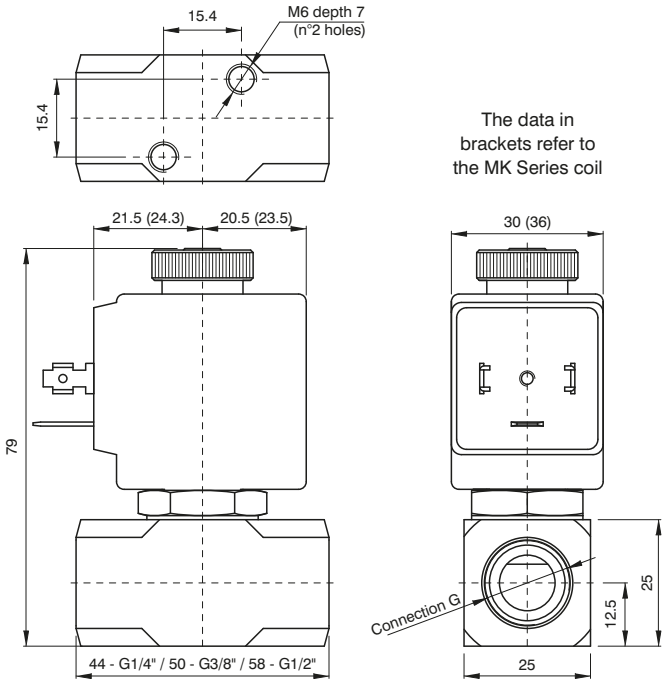

CODE "V"=Seals in FPM ❸ = Coil	Connection G ISO 228	Orifice (mm)	KV (m³/h)	Differential pressure (bar) Min	Max AC	Max DC	Power Consumption AC Inrush	VA Holding	DC Watt	Coil ❸ Series	Size	Temp. range (°C)
F3210BV25❸	1/4"	2,5	0,15	0	10	-	20	15	-	MG	30	-10 +140
F3210BV35❸	1/4"	3,5	0,32	0	7	-	20	15	-	MG	30	
F3210BV45❸	1/4"	4,5	0,41	0	4,5	-	20	15	-	MG	30	
F3210CV35❸	3/8"	3,5	0,32	0	7	-	20	15	-	MG	30	
F3210CV52❸	3/8"	5,2	0,47	0	3	-	20	15	-	MG	30	
F3210DV35❸	1/2"	3,5	0,32	0	7	-	20	15	-	MG	30	
F3210DV52❸	1/2"	5,2	0,47	0	3	-	20	15	-	MG	30	
F3210BV25❸	1/4"	2,5	0,15	0	10	10	40	30	27	MK	36	
F3210BV35❸	1/4"	3,5	0,32	0	7	7	40	30	27	MK	36	
F3210BV45❸	1/4"	4,5	0,41	0	4,5	4,5	40	30	27	MK	36	
F3210CV35❸	3/8"	3,5	0,32	0	7	7	40	30	27	MK	36	
F3210CV52❸	3/8"	5,2	0,47	0	3	3	40	30	27	MK	36	
F3210DV35❸	1/2"	3,5	0,32	0	7	7	40	30	27	MK	36	
F3210DV52❸	1/2"	5,2	0,47	0	3	3	40	30	27	MK	36	
F3210DV64❸	1/2"	6,4	0,64	0	3,5	3,5	40	30	27	MK	36	

N.B. For use with steam maximum admitted pressure PS is 2.5 bar (relative pressure)
Example: F3210BV25❸ => F3210BV25MG56:
2-way normally open with direct operated plunger solenoid valve with Connector G (ISO228) 1/4", Seals in FPM, Orifice 2,5 mm, Coil 24V 50/60Hz (MG56, size 30).

Pneumatic symbol

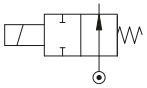

Diagram

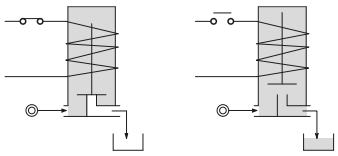

Operational characteristic

- Stainless Steel Body
- Guide pipe in Stainless Steel
- Mobile and fixed core in Stainless Steel
- Springs in Stainless Steel
- Sealing assemblies in FPM

- OPTIONS (if requested):
- Advance ring in silver

Technical characteristic

Maximum admitted pressure (bar) 50	50
Maximum fluid viscosity (mm ²/s) 25cSt	25cSt
Ambient temperature: with class F coil (°C) -10 +55	-10 +55
Ambient temperature: with class H coil (°C) -10 +80	-10 +80
Mounting position	indifferent

2-way normally open with direct operated plunger solenoid valve

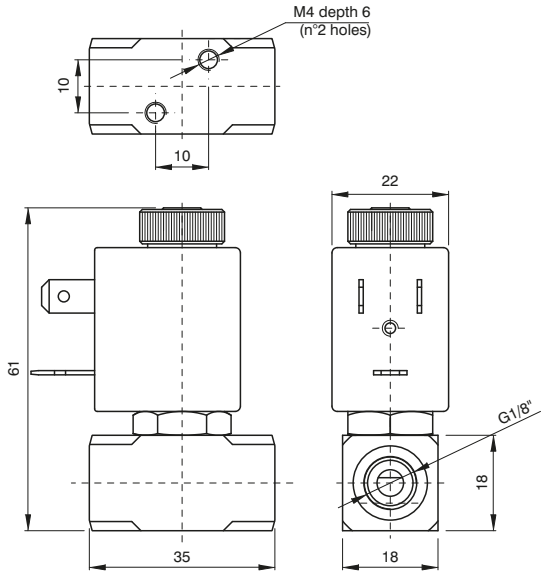

CODE "V"=Seals in FPM ❸ = Coil	Connection G ISO 228	Orifice (mm)	KV (m³/h)	Differential pressure (bar)			Power Consumption			Coil ❸		Temp. range (°C)
				Min	Max		AC Inrush	VA Holding	DC Watt	Series	Size	
					AC	DC						
F3211AV12❸	1/8"	1,2	0,04	0	19	19	12	8	6,5	MI	22	-10 +140
F3211AV15❸	1/8"	1,5	0,06	0	14	14	12	8	6,5	MI	22	
F3211AV20❸	1/8"	2	0,09	0	8	8	12	8	6,5	MI	22	

N.B. For use with steam maximum admitted pressure PS is 2.5 bar (relative pressure)
Example: F3211AV12❸ => F3211AV12MI56:
2-way normally open with direct operated plunger solenoid valve with Connector G (ISO228) 1/8", Seals in FPM, Orifice 1,2 mm, Coil 24V 50/60Hz (MI56, size 22).

Pneumatic symbol

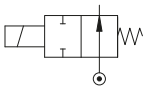

Diagram

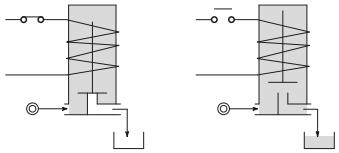

Operational characteristic

- Stainless Steel Body
- Guide pipe in Stainless Steel
- Mobile and fixed core in Stainless Steel
- Springs in Stainless Steel
- Sealing elements in FPM

- OPTIONS (if requested):
- Coil for potentially explosive environments meeting 'ATEX standards Ex m Serie XME'.

Technical characteristic

Maximum admitted pressure (bar)	50
Maximum fluid viscosity (mm ²/s)	25cSt
Ambient temperature: with class F coil (°C)	-10 +55
Ambient temperature: with class H coil (°C)	-10 +80
Mounting position	indifferent

Overall dimensions and technical information are provided solely for informative purposes and may be modified without notice

2-way normally open servo-actuated diaphragm solenoid valve in stainless steel AISI 316

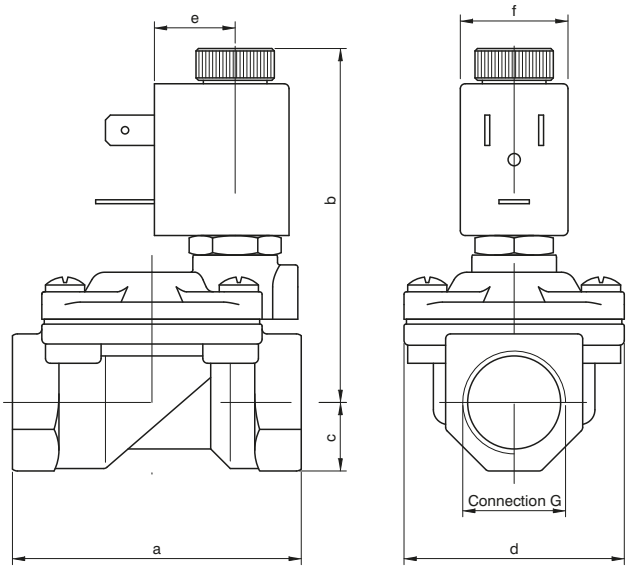

Connection	a	b	c	d	e	f	Weight (g)
G3/8"	59	74	11	45	16	22	300
G1/2"	59	74	13	45	16	22	320
G3/4"	80	78	16	55	16	22	550
G1"	100	88	20	72	16	22	1350

CODE "V"=Seals in FPM ❻ = Coil	Connection G ISO 228	Orifice (mm)	KV (m^3/h)	Differential pressure (bar)			Power Consumption			Coil ❻		Temp. range (°C)
				Min	Max		AC Inrush	VA Holding	DC Watt	Series	Size	
					AC	DC						
F3277CV12❻	3/8"	12	2,2	0,15	15	15	12	8	6,5	MI	22	-10 +140
F3277DV12❻	1/2"	12	2,5	0,15	15	15	12	8	6,5	MI	22	
F3277EV18❻	3/4"	18	5,5	0,15	13	13	12	8	6,5	MI	22	
F3277FV25❻	1"	24	10,2	0,15	10	10	12	8	6,5	MI	22	

N.B. For use with steam maximum admitted pressure PS is 2.5 bar (relative pressure)
Example: F3277CV12❻ => F3277CV12MI5:
2-way normally open servo-actuated diaphragm solenoid valve in stainless steel AISI 316 with Connector G (ISO228) 3/8", Seals in FPM, Orifice 12 mm, Coil 24V DC (MI5, size 22).

Pneumatic symbol

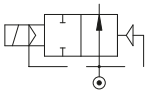

Diagram

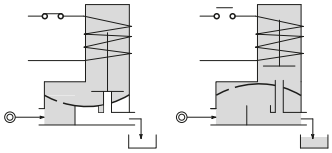

Operational characteristic

- Body and cover in Stainless Steel.
- Guide pipe in Stainless Steel
- Mobile and fixed core in Stainless Steel
- Springs in Stainless Steel
- Sealing assemblies in FPM

- OPTIONS (if requested):
- Coil for potentially explosive environments meeting 'ATEX standards Ex m Serie XME'.
- Seals for use with foodstuff fluids.
- Advance ring in silver

Technical characteristic

Minimum differential pressure (bar)	0,15
Maximum admitted pressure (bar)	25
Maximum fluid viscosity (mm ²/s)	25cSt
Ambient temperature: with class F coil (°C)	-10 +55
Ambient temperature: with class H coil (°C)	-10 +80
Mounting position	Preferably with coil upwards

3-way direct acting solenoid valve

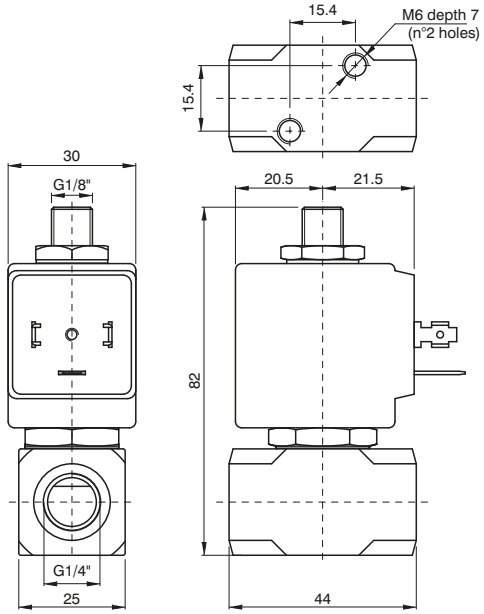

CODE "V"=Seals in FPM Ⓑ = Coil	Connection G ISO 228	Orifice (mm) alim.	Orifice (mm) scar.	KV (m³/h)	Differential pressure (bar) Min	Differential pressure (bar) Max AC	Differential pressure (bar) Max DC	Power Consumption AC Inrush	Power Consumption VA Holding	Power Consumption DC Watt	Coil Ⓑ Series	Coil Ⓑ Size	Temp. range (°C)
U Universal													
F3310BV25UⒷ	1/4"	2,5	2,4	0,16	0	5	4	20	15	10	MG	30	-10 +140

Example: F3310BV25GⒷ => F3310BV25GMG5:
3-way direct acting solenoid valve with Connector G (ISO228) 1/4", Seals in FPM, Feed bore 2,5 mm, Exhaust bore 2,4 mm Coil 24V DC (MG5, size 30), N.O.

Pneumatic symbol

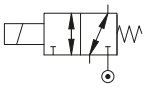

Diagram

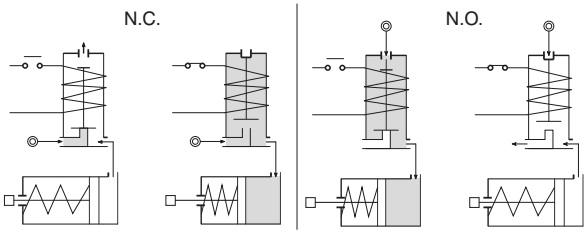

Operational characteristic

- Stainless Steel body
- Guide pipe in Stainless Steel
- Mobile and fixed core in Stainless Steel
- Springs in Stainless Steel
- Sealing assemblies in FPM

- OPTIONS (if requested):
- Advance ring in silver

Technical characteristic

Maximum admitted pressure (bar)	Maximum running pressure + 10%
Maximum fluid viscosity (mm ²/s)	25cSt
Ambient temperature: with class F coil (°C)	-10 +55
Ambient temperature: with class H coil (°C)	-10 +80
Mounting position	indifferent
Weight (g.)	150

Overall dimensions and technical information are provided solely for informative purposes and may be modified without notice

3-way direct acting solenoid valve

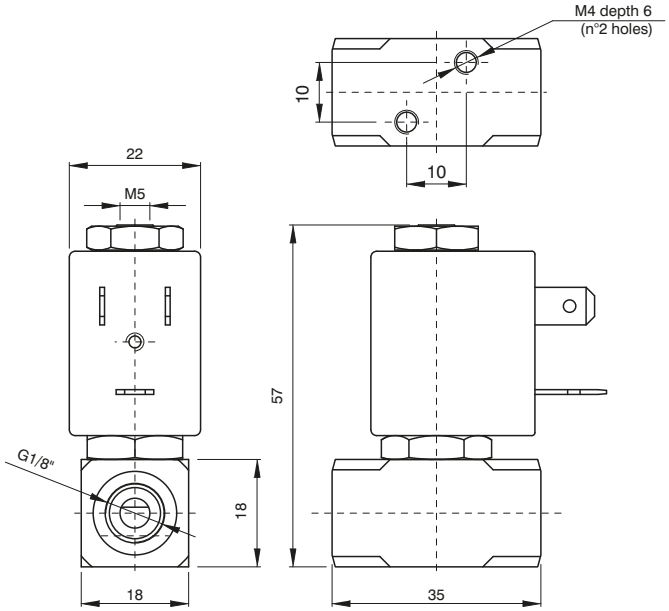

CODE "V"=Seals in FPM ⓑ = Bobna	Connection G ISO 228	Orifice (mm) alim.	Orifice (mm) scar.	KV (m³/h)	Differential pressure (bar) Min	Differential pressure (bar) Max AC	Differential pressure (bar) Max DC	Power Consumption AC Spunto	Power Consumption VA Regime	Power Consumption DC Watt	Coil ⓑ Series	Coil ⓑ Size	Temp. range (°C)
U Universal													
F3311AV15Uⓑ	1/8"	1,5	1,5	0,06	0	6	6	12	8	6,5	MI	22	-10 +140

Example: F3311AV15Gⓑ => F3311AV15GMI5:
3-way direct acting solenoid valve with Connector G (ISO228) 1/8", Seals in FPM, Feed bore 1,5 mm, Exhaust bore 1,5 mm Coil 24V DC (MI5, size 22), N.O.

Pneumatic symbol

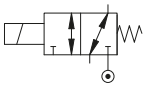

Diagram

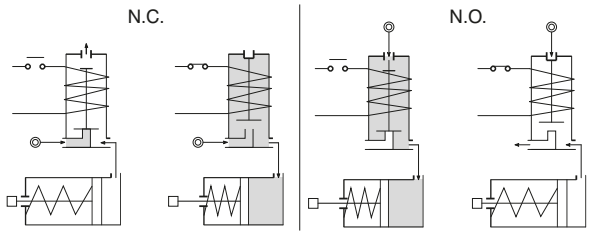

Operational characteristic

- Stainless Steel Body
- Guide pipe in Stainless Steel
- Mobile and fixed core in Stainless Steel
- Springs in Stainless Steel
- Sealing assemblies in FPM

- OPTIONS (if requested):
- Advance ring in silver
- Coil for potentially explosive environments meeting 'ATEX standards Ex m Serie XME'.
- Exhaust with hose mount.

Technical characteristic

Maximum admitted pressure (bar)	Maximum running pressure + 10%
Maximum fluid viscosity (mm ²/s)	25cSt
Ambient temperature: with class F coil (°C)	-10 +55
Ambient temperature: with class H coil (°C)	-10 +80
Mounting position	indifferent
Weight (g.)	150

2-way normally closed servo-actuated towed membrane solenoid valve

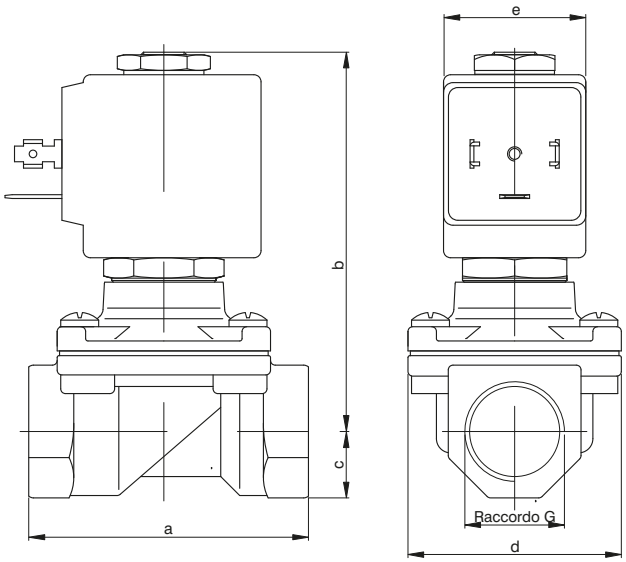

Connection	a	b	c	d	e	f	Weight (g) Series 2	Weight (g) Series 5
G3/8" Ø12	59	83	14	45	16	36	0,50	0,58
G1/2"	59	83	14	45	16	36	0,45	0,53
G3/4"	79	90	18	55		36	-	0,75
G1"	96	101	20	72		36	-	1,10

CODE "V"=Seals in FPM Ⓑ = Coil	Connection G ISO 228	Orifice (mm)	KV (m³/h)	Differential pressure (bar)			Power Consumption			Coil Ⓑ		Temp. range (°C)
				Min	Max		AC Inrush	VA Holding	DC Watt	Series	Size	
					AC	DC						
F3108CV12Ⓑ	3/8"	12	2	0	10	-	20	15	-	MG	30	-10 +140
F3108DV12Ⓑ	1/2"	12	2.2	0	10	-	20	15	-	MG	30	
F3108CV12Ⓑ	3/8"	12	2	0	12	10	40	30	27	MK	36	
F3108DV12Ⓑ	1/2"	12	2.2	0	12	10	40	30	27	MK	36	
F3108EV18Ⓑ	3/4"	18	4.5	0	9	-	40	30	-	MK	36	
F3108FV25Ⓑ	1"	24	8.5	0	7	-	40	30	-	MK	36	
F3108EV18CⒷ	3/4"	18	4.5	0	-	9	-	-	27	MK	36	
F3108FV25CⒷ	1"	24	8.5	0	-	8	-	-	27	MK	36	

Example: F3108DV12Ⓑ => F3108DV12MG5:
2-way normally closed in brass with towed membrane solenoid valve with Connector G (ISO228) 1/2", Seals in FPM, Orifice 12 mm, Coil 24V DC (MG5, size 30).

Pneumatic symbol

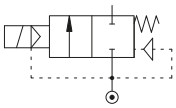

Diagram

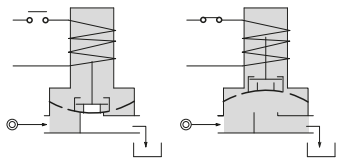

Operational characteristic

- Body and cover in Brass
- Guide pipe in Stainless Steel
- Mobile and fixed core in Stainless Steel
- Springs in Stainless Steel
- Sealing assemblies in FPM

- OPTIONS (if requested):
- Surface treatment in chemical nickel-plating

Technical characteristic

Maximum admitted pressure (bar)	25
Maximum fluid viscosity (mm ²/s)	25cSt
Ambient temperature: with class F coil (°C)	-10 +55
Ambient temperature: with class H coil (°C)	-10 +80
Mounting position	Preferably with coil upwards

Overall dimensions and technical information are provided solely for informative purposes and may be modified without notice

2-way normally closed servo-actuated piston solenoid valve 1/4”

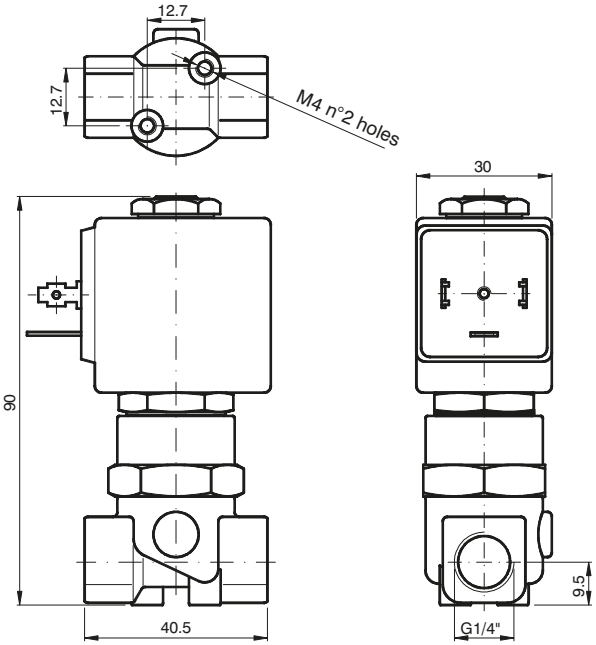

CODE "V"=Seals in FPM ❻ = Coil	Connection G ISO 228	Orifice (mm)	KV (m³/h)	Differential pressure (bar)			Power Consumption			Coil ❻		Temp. range (°C)
				Min	Max		AC Inrush	VA Holding	DC Watt	Series	Size	
					AC	DC						
F3119BV52❻	1/4”	5,2	0,47	1,5	50	50	20	15	10	MG	30	-10 +140

Example: F3119BV52❻ => F3119BV52MG5:
2-way normally closed servo-actuated piston solenoid valve in brass with Connector G (ISO228) 1/4”, Seals in FPM, Orifice 5,2 mm, Coil 24V DC (MG5, size 30).

Pneumatic symbol

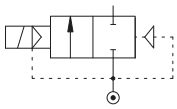

Diagram

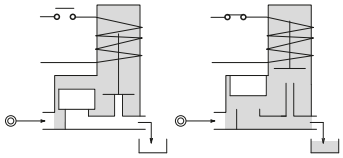

Operational characteristic

- Body and cover in Brass
- Guide pipe in Stainless Steel
- Mobile and fixed core in Stainless Steel
- .Springs in Stainless Steel
- Piston in Brass.
- Guide slide in loaded PTFE.
- Main shutter in PTFE.
- Remaining sealing elements in FPM.

- OPTIONS (if requested):
- Surface treatment in chemical nickel-plating

Technical characteristic

Minimum differential pressure (bar)	1
Maximum admitted pressure (bar)	40
Maximum running pressure Versione /1 (bar)	60
Maximum fluid viscosity (mm ²/s)	25cSt
Ambient temperature: with class F coil (°C)	-10 +55
Ambient temperature: with class H coil (°C)	-10 +80
Mounting position	630
Weight (g.)	Preferably with coil upwards

2-way normally closed, servo-actuated piston solenoid valve

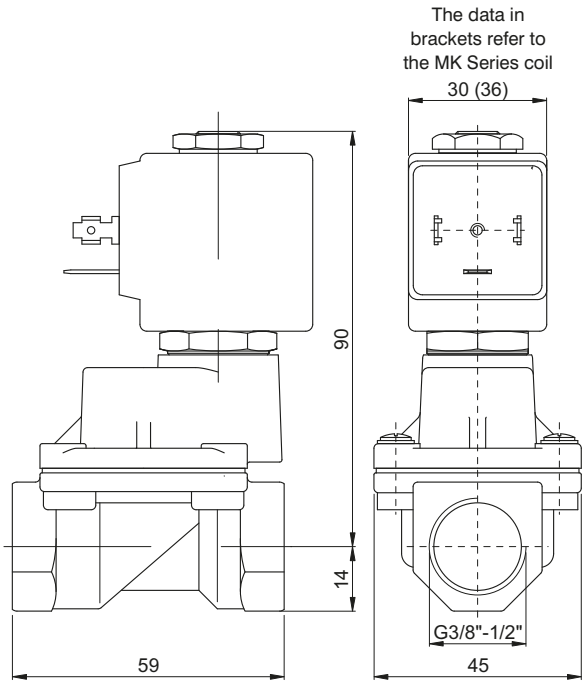

CODE "V"=Seals in FPM ❻ = Coil	Connection G ISO 228	Orifice (mm)	KV (m³/h)	Differential pressure (bar)			Power Consumption			Coil ❻		Temp. range (°C)
				Min	Max		AC Inrush	VA Holding	DC Watt	Series	Size	
					AC	DC						
F3119CV12❻	3/8"	12	2	1	30	30	20	15	10	MG	30	-10 +140
F3119DV12❻	1/2"	12	2.2	1	30	30	20	15	10	MG	30	
F3119CV12/1❻	3/8"	12	2	1	50	50	40	30	27	MK	36	
F3119DV12/1❻	1/2"	12	2.2	1	50	50	40	30	27	MK	36	

Example: F3119DV12❻ => F3108DV12MG5:
2-way normally closed servo-actuated piston solenoid valve in brass with Connector G (ISO228) 1/2", Seals in FPM, Orifice 12 mm, Coil 24V DC (MG5, size 30).

Pneumatic symbol

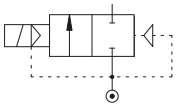

Diagram

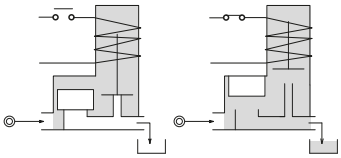

Operational characteristic

- Body and cover in Brass
- Guide pipe in Stainless Steel
- Mobile and fixed core in Stainless Steel
- .Springs in Stainless Steel
- Piston in Brass.
- Guide slide in loaded PTFE.
- Main shutter in PTFE.
- Remaining sealing elements in FPM.

- OPTIONS (if requested):
- Surface treatment in chemical nickel-plating

Technical characteristic

Minimum differential pressure (bar)	1
Maximum admitted pressure (bar)	40
Maximum running pressure Versione /1 (bar)	60
Maximum fluid viscosity (mm ²/s)	25cSt
Ambient temperature: with class F coil (°C)	-10 +55
Ambient temperature: with class H coil (°C)	-10 +80
Mounting position	Preferably with coil upwards
Weight (gr.) with MG Series Coil	630
Weight (gr.) with MK Series Coil	710

Overall dimensions and technical information are provided solely for informative purposes and may be modified without notice

2-way normally closed servo-actuated piston solenoid valve for use with steam

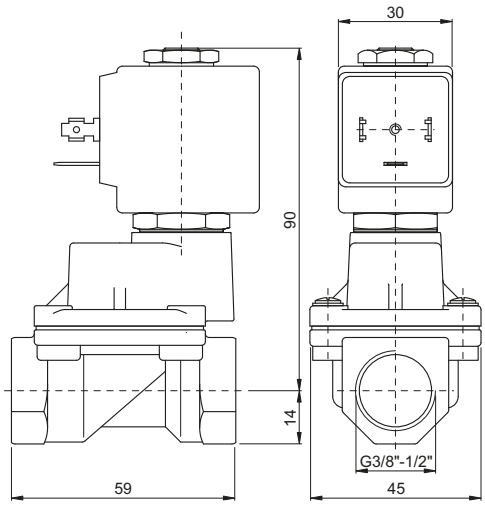

CODE "V"=Seals in FPM ❻ = Coil	Connection G ISO 228	Orifice (mm)	KV (m³/h)	Differential pressure (bar) Min	Max AC	Max DC	Power Consumption AC Inrush	VA Holding	DC Watt	Coil ❻ Series	Size	Temp. range (°C)
F3119CW12/1❻	3/8"	12	2	2,5	9	9	20	15	10	MG	30	-10 +180
F3119DW12/1❻	1/2"	12	2.2	2,5	9	9	20	15	10	MG	30	

Example: F3119DW12/1❻ => F3119DW12/1MG5:
2-way normally closed servo-actuated piston solenoid valve in brass with Connector G (ISO228) 1/2", Seals in FPM, Orifice 12 mm, Coil 24V DC (MG5, size 30).

Pneumatic symbol

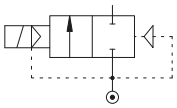

Diagram

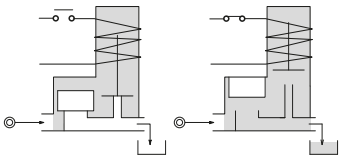

Operational characteristic

- Body and cover in Brass
- Guide pipe in Stainless Steel
- Mobile and fixed core in Stainless Steel
- Springs in Stainless Steel
- Piston in Stainless Steel.
- Guide slide in loaded PTFE.
- Sealing elements in PFTE/FPM.

- OPTIONS (if requested):
- Surface treatment in chemical nickel-plating
- Steam sealing up to +160°C

Technical characteristic

Minimum differential pressure (bar)	2,5
Ambient temperature: only with class H Coil (°C)	-10 +80
Mounting position	Preferably with coil upwards
Weight (g.)	630

2-way solenoid normally closed valve, direct plunger operation, with housing for potentially explosive environments certified: CESI 03 ATEX 344 ExII2G/D Eex "d" IIC T6

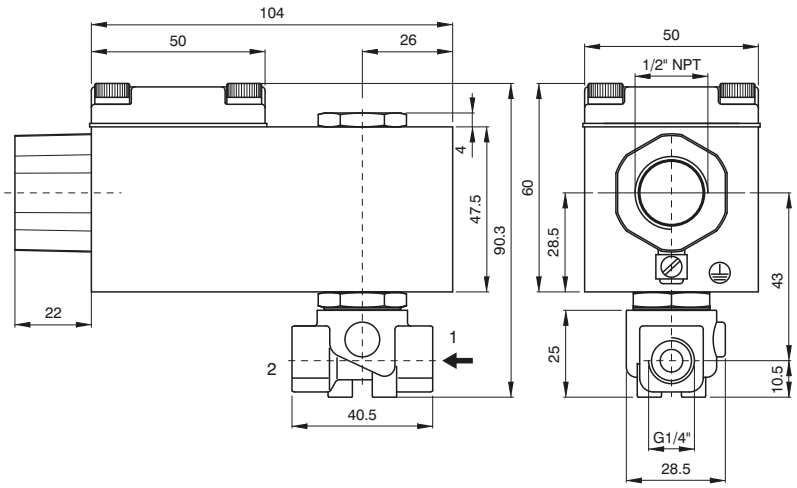

CODE "V"=Seals in FPM ⓑ = Coil	Connection G ISO 228	Orifice (mm)	KV (m³/h)	Differential pressure (bar) Min	Max AC	Max DC	Power Consumption AC Inrush	Power Consumption DC Watt	Temp. range (°C)
FX3106BV35ⓑ	1/4"	3,5	0,32	0	10	8	12	8	-10 +140
FX3106BV45ⓑ	1/4"	4,5	0,41	0	6,5	3,5	12	8	

Coil ⓑ Series A6 (CURRENT)
A6B=24 Volt (AC 50/60Hz)
A6E=220/230 Volt (AC 50/60Hz)
A60=12 Volt (DC)
A61=24 Volt (DC)

N.B. The solenoid valve is suited for intercepting only fluids that are NOT potentially explosive.
Example: FX3106BV35b => FX3106BV35A60:
2-way solenoid normally closed valve, direct plunger operation, with housing for potentially explosive environments certified:
CESI 03 ATEX 344 ExII2G/D Eex "d" IIC T6 with Connector G (ISO228) 1/4", Seals in FPM, Orifice 3,5 mm, Coil 12V DC (A60).

Pneumatic symbol

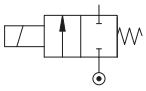

Diagram

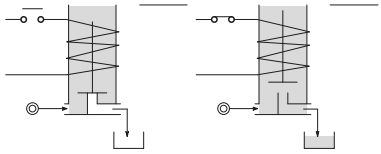

Operational characteristic

- Brass Body
- Container in light red coloured alloy
- Electrical connection 1/2" NPT
- Sealing elements in FPM

- OPTIONS (if requested):
- Manual operation
- Surface treatment in chemical nickel-plating
- Inserted stainless steel seating

Technical characteristic

Maximum admitted pressure (bar)	80
Maximum fluid viscosity (mm ²/s)	25cSt
Ambient temperature (°C)	-10 +40
Mounting position	With coil upwards
Weight (g.)	600

Overall dimensions and technical information are provided solely for informative purposes and may be modified without notice

2-way normally closed direct acting solenoid valve with housing for potentially explosive environments certified: CESI 03 ATEX 344 ExII2G/D Eex "d" IIC T6

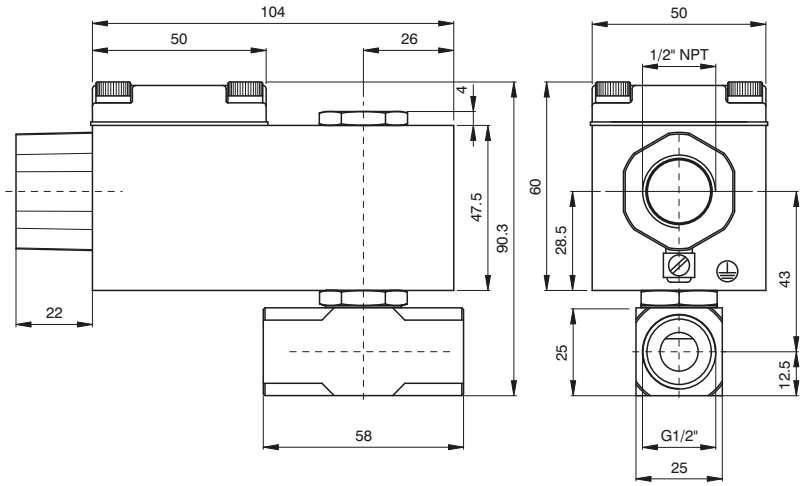

CODE "V"=Seals in FPM ❻ = Coil	Connection G ISO 228	Orifice (mm)	KV (m³/h)	Differential pressure (bar) Min	Max AC	Max DC	Power Consumption AC Inrush	Power Consumption DC Watt	Temp. range (°C)
FX3106DV52❻	1/2"	5,2	0,47	0	4	1,8	12	8	-10 +140
FX3106DV64❻	1/2"	6,4	0,64	0	3	1	12	8	

Coil ❻ Series A6 (CURRENT)
A6B=24 Volt (AC 50/60Hz)
A6E=220/230 Volt (AC 50/60Hz)
A60=12 Volt (DC)
A61=24 Volt (DC)

N.B. The solenoid valve is suited for intercepting only fluids that are NOT potentially explosive.
Example: FX3106DV52❻ => FX3106DV52A60:
2-way solenoid normally closed valve, direct plunger operation. with housing for potentially explosive environments certified:
CESI 03 ATEX 344 ExII2G/D Eex "d" IIC T6, with Connector G (ISO228) 1/2", Seals in FPM, Orifice 5,2 mm, Coil 12V DC (A60).

Pneumatic symbol

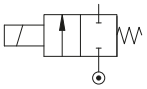

Diagram

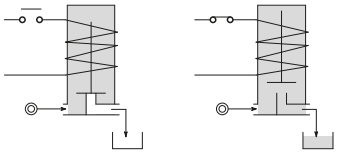

Operational characteristic

- Brass Body
- Container in light red coloured alloy
- Electrical connection 1/2" NPT
- Sealing elements in FPM

- OPTIONS (if requested):
- Manual operation
- Surface treatment in chemical nickel-plating
- Inserted stainless steel seating

Technical characteristic

Maximum admitted pressure (bar)	80
Maximum fluid viscosity (mm ²/s)	25cSt
Ambient temperature (°C)	-10 +40
Mounting position	With coil upwards
Weight (g.)	660

2-Way normally closed solenoid valve, servo-actuated diaphragm, with housing for potentially explosive environments certified: CESI 03 ATEX 344 ExII2G/ D Eex "d" IIC T6

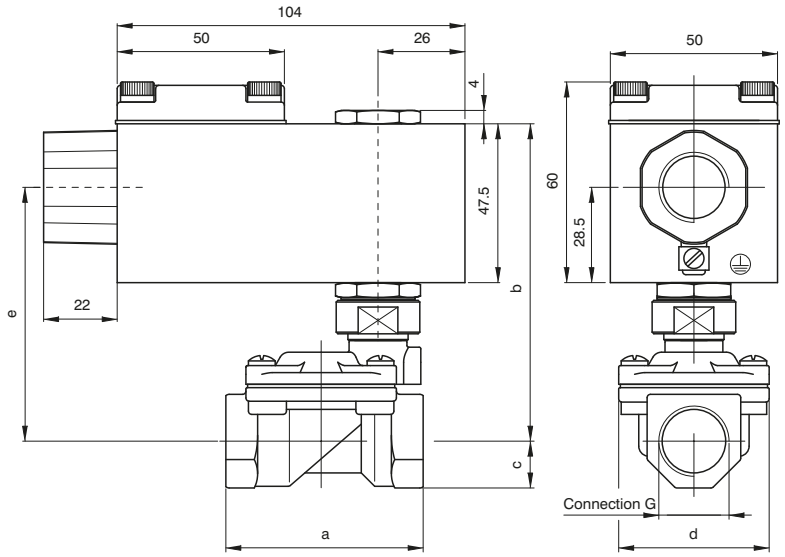

Connection G	a	b	c	d	e	Weight (g)
G1/4" Ø10	49	90	11	32	71	720
G3/8" Ø12	59	95	14	45	76	920
G1/2" Ø12	59	95	14	45	76	920
G3/4"	79	101	18	54	82	1100
G1"	96	110	20	72	91	1500

CODE "V"=Seals in FPM ❽ = Coil	Connection G ISO 228	Orifice (mm)	KV (m³/h)	Differential pressure (bar)			Power Consumption		Temp. range (°C)
				Min	Max		AC Inrush	DC Watt	
					AC	DC			
FX3107BV10❽	1/4"	10	1,5	0,15	15	15	12	8	-10 +140
FX3107CV12❽	3/8"	12	2,2	0,15	15	15	12	8	
FX3107DV12❽	1/2"	12	2,5	0,15	15	15	12	8	
FX3107EV18❽	3/4"	18	5,5	0,15	13	13	12	8	
FX3107FV25❽	1"	24	10,2	0,15	10	10	12	8	

Coil ❽ Series A6
CURRENT
A6B=24 Volt (AC 50/60Hz)
A6E=220/230 Volt (AC 50/60Hz)
A60=12 Volt (DC)
A61=24 Volt (DC)

N.B. The solenoid valve is suited for intercepting only fluids that are NOT potentially explosive.
Example: FX3107BV101❽ => FX3107BV101A60:
2-Way normally closed solenoid valve, servo-actuated diaphragm. with housing for potentially explosive environments certified:
CESI 03 ATEX 344 ExII2G/D Eex "d" IIC T6, with Connector G (ISO228) 1/4", Seals in FPM, Orifice 10 mm, Coil 12V DC (A60).

Pneumatic symbol

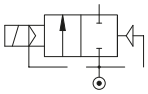

Diagram

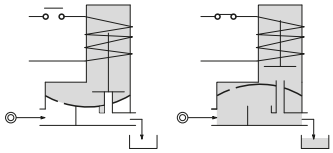

Operational characteristic

- Body and cover in Brass
- Container in light red coloured alloy
- Electrical connection 1/2" NPT
- Sealing elements in FPM

- OPTIONS (if requested):
- Surface treatment in chemical nickel-plating
- Version with slowed commutation

Technical characteristic

Minimum differential pressure (bar)	0,15
Maximum admitted pressure (bar)	25
Maximum fluid viscosity (mm ²/s)	25cSt
Ambient temperature (°C)	-10 +40
Mounting position	Preferably with coil upwards

Overall dimensions and technical information are provided solely for informative purposes and may be modified without notice

2-Way normally closed direct acting solenoid valve with housing for potentially explosive environments certified: CESI 03 ATEX 344 ExII2G/D Eex "d" IIC T6

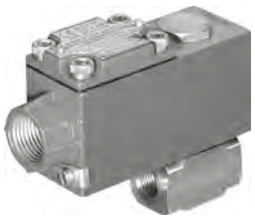

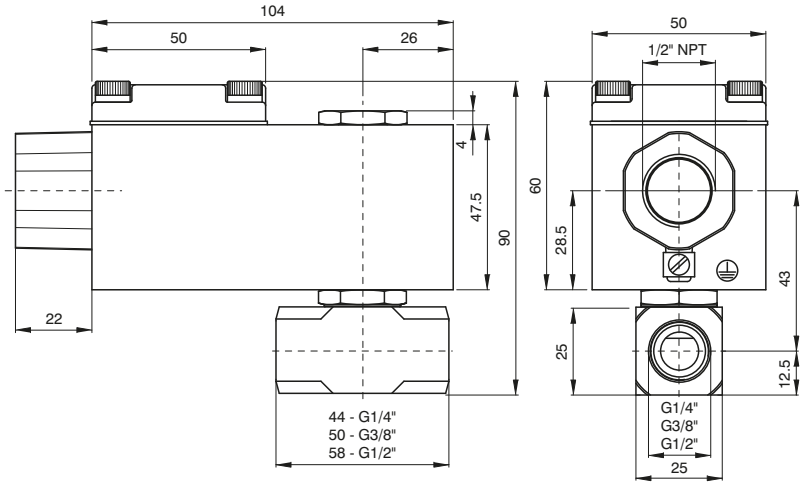

CODE "V"=Seals in FPM ❸ = Coil	Connection G ISO 228	Orifice (mm)	KV (m^3/h)	Differential pressure (bar) Min	Max AC	Max DC	Power Consumption AC Inrush	Power Consumption DC Watt	Temp. range (°C)
FX3110BV25❸	1/4"	2,5	0,15	0	16	14	12	8	-10 +140
FX3110BV35❸	1/4"	3,5	0,32	0	10	8	12	8	
FX3110BV45❸	1/4"	4,5	0,41	0	6,5	3,5	12	8	
FX3110CV35❸	3/8"	3,5	0,32	0	10	8	12	8	
FX3110CV52❸	3/8"	5,2	0,47	0	4	1,8	12	8	
FX3110DV35❸	1/2"	3,5	0,32	0	10	8	12	8	
FX3110DV52❸	1/2"	5,2	0,47	0	4	1,8	12	8	
FX3110DV64❸	1/2"	6,4	0,64	0	3,5	1	12	8	

Coil ❸ Series A6
CURRENT
A6B=24 Volt (AC 50/60Hz)
A6E=220/230 Volt (AC 50/60Hz)
A60=12 Volt (DC)
A61=24 Volt (DC)

N.B. The solenoid valve is suited for intercepting only fluids that are NOT potentially explosive.
Example: FX3110BV25❸ => FX3110BV25A60:
2-Way normally closed direct acting solenoid valve with housing for potentially explosive environments certified:
CESI 03 ATEX 344 ExII2G/D Eex "d" IIC T6, with Connector G (ISO228) 1/4", Seals in FPM, Orifice 2,5 mm, Coil 12V DC (A60).

Pneumatic symbol

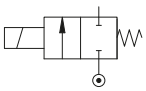

Diagram

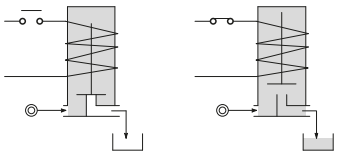

Operational characteristic

- Stainless Steel Body
- Container in light red coloured alloy
- Electrical connection 1/2" NPT
- Sealing elements in FPM

- OPTIONS (if requested):
- Advance ring in silver

Technical characteristic

Maximum admitted pressure (bar)	100
Maximum fluid viscosity (mm ²/s)	25cSt
Ambient temperature (°C)	-10 +40
Mounting position	with coil upwards
Weight (g.)	660

2-Way normally closed servo-actuated diaphragm solenoid valve in stainless steel AISI 316, with housing for potentially explosive environments certified: CESI 03 ATEX 344 ExII2G/D Eex "d" IIC T6

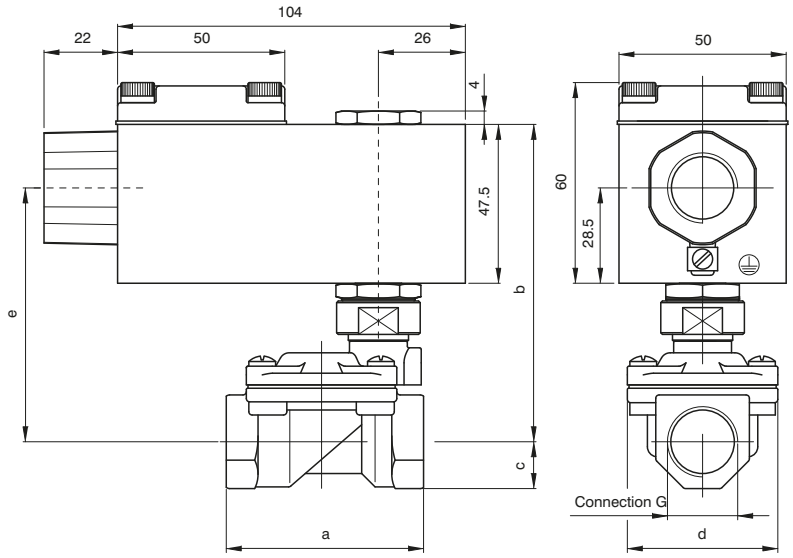

Connection G	a	b	c	d	e	Weight (g)
G3/8"	59	95	14	45	76	1120
G1/2"	59	95	14	45	76	1110
G3/4"	79	101	18	54	82	1100
G1"	96	110	20	72	91	1500

CODE "V"=Seals in FPM Ⓑ = Coil	Connection G ISO 228	Orifice (mm)	KV (m^3/h)	Differential pressure (bar)			Power Consumption		Temp. range (°C)
				Min	Max		AC Inrush	DC Watt	
					AC	DC			
FX3177CV121Ⓑ	3/8"	12	2,2	0,15	15	15	12	8	-10 +140
FX3177DV121Ⓑ	1/2"	12	2,5	0,15	15	15	12	8	
FX3177EV181Ⓑ	3/4"	18	5,5	0,15	13	13	12	8	
FX3177FV251Ⓑ	1"	24	10,2	0,15	10	10	12	8	

Coil Ⓑ Series A6
CURRENT
A6B=24 Volt (AC 50/60Hz)
A6E=220/230 Volt (AC 50/60Hz)
A60=12 Volt (DC)
A61=24 Volt (DC)

N.B. The solenoid valve is suited for intercepting only fluids that are NOT potentially explosive.
Example: FX3177CV121Ⓑ => FX3177CV121A60:
2-Way normally closed servo-actuated diaphragm solenoid valve in stainless steel AISI 316, with housing for potentially explosive environments certified:
CESI 03 ATEX 344 ExII2G/D Eex "d" IIC T6, with Connector G (ISO228) 3/8", Seals in FPM, Orifice 12 mm, Coil 12V DC (A60).

Pneumatic symbol

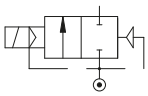

Diagram

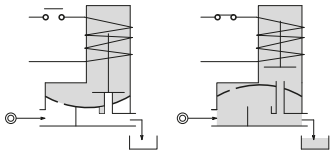

Operational characteristic

- Body and cover in Stainless Steel
- Container in light red coloured alloy
- Electrical connection 1/2" NPT
- Sealing elements in FPM

- OPTIONS (if requested):
- Version with slowed commutation

Technical characteristic

Minimum differential pressure (bar)	0,15
Maximum admitted pressure (bar)	25
Maximum fluid viscosity (mm ²/s)	25cSt
Ambient temperature (°C)	-10 +40
Mounting position	Preferably with coil upwards

Overall dimensions and technical information are provided solely for informative purposes and may be modified without notice

MG Series coil (Size 30 mm), class F

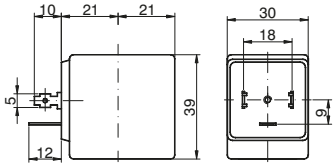

Ordering code	
MG(T)	
(T)	VOLTAGE
	56=24 Volt (AC 50/60Hz)
	58=220/230 Volt (AC 50/60Hz)
	5=24 Volt (DC)
	4=12 Volt (DC)

Options:
Electrical connection via cables
Special voltages and powers.

Operational characteristic							
Class of insulation	Tolerance on AC voltage	Tolerance on DC voltage	Degree of protection with connector fitted	Continuous service	Electrical conn.	Connectors	Weight (g.)
F	+15% -10%	± 10%	IP65	ED100%	DIN 43650A	PG9 Codice 10349000	120

MI Series coil (Size 22 mm), class F

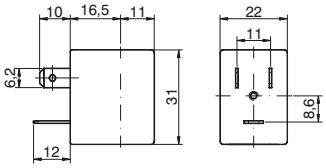

Ordering code	
MI(T)	
(T)	VOLTAGE
	56=24 Volt (AC 50/60Hz)
	58=220/230 Volt (AC 50/60Hz)
	5=24 Volt (DC)
	4=12 Volt (DC)
	21=48-50 Volt (AC 50/60Hz)

Options:
Electrical connection via cables
Special voltages and powers.

Operational characteristic							
Class of insulation	Tolerance on AC voltage	Tolerance on DC voltage	Degree of protection with connector fitted	Continuous service	Electrical conn.	Connectors	Weight (g.)
F	+15% -10%	± 10%	IP65	ED100%	DIN 43650A	PG9 Codice 10349000	120

MK Series coil (Size 36 mm), class H

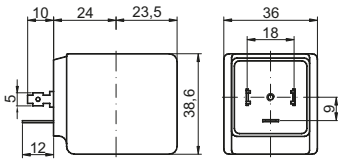

Ordering code	
MK(T)	
(T)	VOLTEGE
	56=24 Volt (AC 50/60Hz)
	58=220/230 Volt (AC 50/60Hz)
	5=24 Volt (DC)
	4 =12 Volt (DC)

Options:
Electrical connection via cables
Special voltages and powers.

Operational characteristic							
Class of insulation	Tolerance on AC voltage	Tolerance on DC voltage	Degree of protection with connector fitted	Continuous service	Electrical conn.	Connectors	Weight (g.)
F	+15% -10%	± 10%	IP00	ED100%	DIN 43650A	PG9 Codice 10349000	200

Coils 2G Ex mb IIC T4-T6; II2D Ex mb IIIC T85°C-T135°C (Size 30 mm), Class H

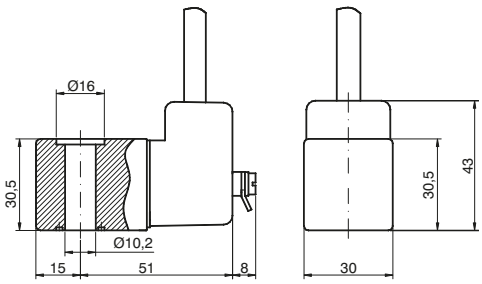

Ordering code	
XME(T)	
(T)	VOLTEGE
	56=24 Volt (AC 50/60Hz)
	58=220/230 Volt (AC 50/60Hz)
	5=24 Volt (DC)
	4 =12 Volt (DC)

Options:
Electrical connection via cables
Special voltages and powers.

Operational characteristic						
Class of insulation	Tolerance on AC voltage	Tolerance on DC voltage	Degree of protection with connector fitted	Continuous service	Electrical conn.	Weight (g.)
F	+15% -10%	± 10%	Ip00	ED100%	3m cable	250

2way angle seat valve pneumatically operated

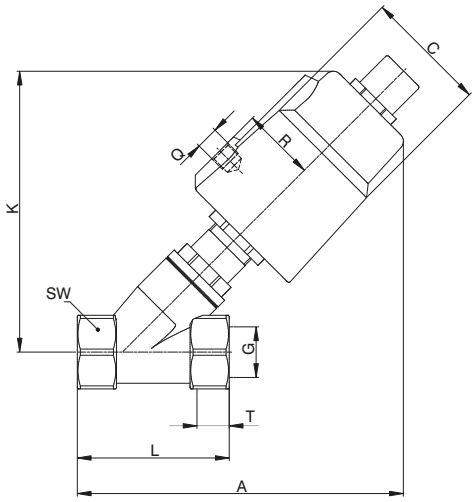

Table of dimensions

CODE AISI316	CODE AISI304	Connection G	Actuator (mm)	C (mm)	R (mm)	K (mm)	Q (mm)	T (mm)	A (mm)	L (mm)	SW (mm)
PVF40115-316	PVF40115-304	1/2"	40	50,5	27	111	1/8"	15	119	68	27
PVF50115-316	PVF50115-304	1/2"	50	60	33	124	1/8"	15	131	68	27
PVF50120-316	PVF50120-304	3/4"	50	60	33	128	1/8"	16	136	75	32
PVF50125-316	PVF50125-304	1"	50	60	33	136	1/8"	17	145	90	40
PVF63125-316	PVF63125-304	1"	63	75	41	162	1/8"	17	169	90	40
PVF63132-316	PVF63132-304	1 -1/4"	63	75	41	174	1/8"	21	187	116	50
PVF63140-316	PVF63140-304	1 -1/2"	63	75	41	175	1/8"	21	187	116	56
PVF63150-316	PVF63150-304	2"	63	75	41	183	1/8"	22	201	138	69
PVF125AL165-316	PVF125AL165-304	2-1/2"	125-Aluminium	148	74	302	1/4"	26	320	178	85
PVF125AL180-316	PVF125AL180-304	3"	125-Aluminium	148	74	313	1/4"	27	372	210	100

Technicals data

CODE AISI316	CODE AISI304	Connection G	KV m³/h	Actuator (mm)	Maximum ΔP (bar) Above seat	Maximum ΔP (bar) Under seat	Piloting pressure (bar)	Weight (g.)
PVF40115-316	PVF40115-304	1/2"	4,8	40	16	13	3 ÷ 8	765
PVF50115-316	PVF50115-304	1/2"	4,8	50	16	14		952
PVF50120-316	PVF50120-304	3/4"	10	50	16	14		1062
PVF50125-316	PVF50125-304	1"	14	50	16	8		1371
PVF63125-316	PVF63125-304	1"	14	63	16	13		2006
PVF63132-316	PVF63132-304	1 -1/4"	23	63	16	8		2575
PVF63140-316	PVF63140-304	1 -1/2"	30	63	16	5		2714
PVF63150-316	PVF63150-304	2"	70	63	9	3		3634
PVF125AL165-316	PVF125AL165-304	2-1/2"	107	125-Aluminium	16	9		9713
PVF125AL180-316	PVF125AL180-304	3"	157	125-Aluminium	16	5	3 ÷ 10	13003

Pneumatic symbol

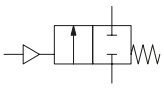

Operational characteristic

- High flow rate thanks to Body configuration with inclined seating.
- Anti water hammer functioning with input below shutter.
- Pneumatically operated valve with stainless steel Body, resistant to ambient corrosion.
- Self-levelling shutter to ensure improved sealing.
- Optical position indicator.
- May be used with back pressure for gaseous fluids.
- Self-adjusting maintenance free stuffer gasket package.
- Valves may be mounted in all positions.
- **OPTIONS:**
- Connection type: GAS ISO / NPT

Valve Body technical characteristics

- Fluid temperature: -10°C ÷ + 180°C
- Temperature: -10°C ÷ + 80°C
- Fluid viscosity: max. 600cSt.
- Shutter: PTFE.
- Gasket packet with PTFE, FKM stuffer

Actuator technical characteristics

- Body AISI 304
- Pilot fluid dry or lubricated Air, gas and neutral fluids.
- Temperature fluid max. + 60°C.

Proximity Sensor

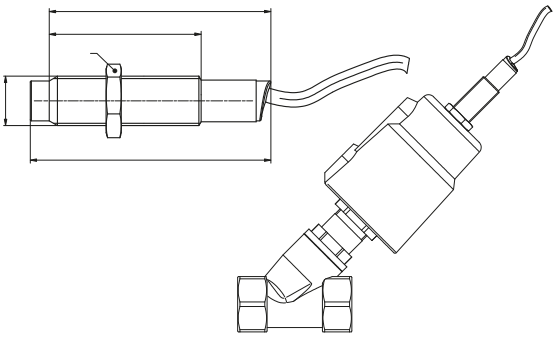

Ordering code

PVF.T.S

T	OUTPUT TYPE
	01 = NPN (N.C.)
	02= NPN (N.O.)
	03 = PNP (N.C.)
	04 = PNP (N.O.)

Nickel brass sensor, usable on valves up to size 2 inches for detection ON - OFF
Cable: 2m

Operational characteristic

Maximum current	Voltage field	Temperature (°C)	Detection Distance	Protection grade	Weight (g)
100 mA	10 ÷ 30V DC	-10°C ÷ +70°C	3mm (max) ± 10 %	IP67	68

Overall dimensions and technical information are provided solely for informative purposes and may be modified without notice

Series 514/N

General

The **514**/**N** Solenoid valves, are 2 stage valves actuated electro-pneumatically. A series 300 directly operated solenoid valve actuates pneumatically the principal power distributor.
Everything is well integrated in a practical configuration that also permits applications where there is limited space. Used primarily to operate rotary actuators and wherever there is a **NAMUR** standard installation plan.
The pilot air is normally taken from the inlet port (autofeed) and the only actuating signal is electric.
The range of the solenoid valves, as far as dimensions and mechanical construction, is similar to series 200. We have therefore solenoid valves G 1/4" with identical pneumatic characteristics that are, however, actuated electrically. They have a balanced spool, insentive to presence or absence of pressure. They are constructed in 3 and 5 way with 1 solenoid (monostable) or 2 solenoids (bistable).

"NAMUR" interface dimensions:
according to standard (VDI/VDE 3847 July 2003)

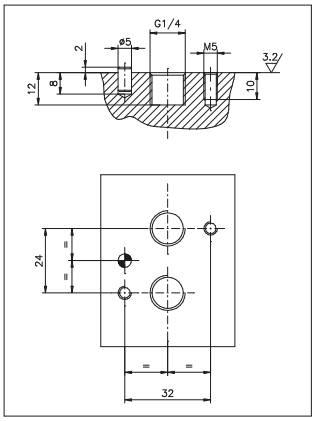

Construction characteristics

Body	Aluminium
Spacer	Technopolymer
Seals	NBR
Springs	Spring steel
Operators	Aluminium
Spools	Nickel plated steel
Screws	Zinc coated Steel

Use and maintenance

This valves have an average life of 15 million cycles depending on the application and air quality.
Filtered and lubricated air using specified lubricants will reduce the wear of the seals and ensures long and trouble free operation.
Please ensure that the valve is being used according with the manufacturers specification, such as air pressure and temperature.
The exhaust port of the distributor has to be protected in a dusty and dirty environment.
Repair kits including the spool complete with seals are available for overhauling the valves.
However, although this is a simple operation it should be carried out by a competent person.

ATTENTION: use hydraulic oil class H for lubrication such as MAGNA GC 32 (Castrol).

1

AIR DISTRIBUTION

Solenoid - Spring

Coding: 514/N.Ⓕ.0.1.M2

Operational characteristics	
Fluid	Filtered air. No lubrication needed, if applied it shall be continuous
Max working pressure (bar)	10
Temperature °C	-10 ÷ +50
Flow rate at 6 bar with Δp=1 (Nl/min)	1030
Orifice size (mm)	7
Working ports size	G 1/4"

	FUNCTION
Ⓕ	**32** = 3 ways
	52 = 5 ways

5 ways

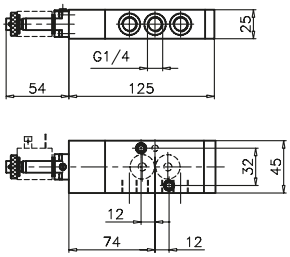

Weight 450 g
Minimum working pressure 2,5 bar

514/N.52.0.1.M2

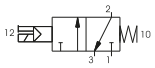

3 ways

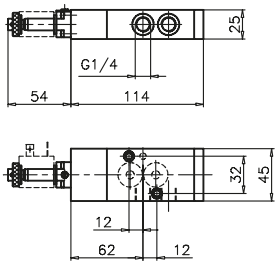

Weight 390 g
Minimum working pressure 2,5 bar

514/N.32.0.1.M2

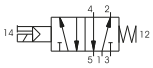

Solenoid-Differential

Coding: 514/N.Ⓕ.0.12.M2

Operational characteristics	
Fluid	Filtered air. No lubrication needed, if applied it shall be continuous
Max working pressure (bar)	10
Temperature °C	-10 ÷ +50
Flow rate at 6 bar with Δp=1 (Nl/min)	1030
Orifice size (mm)	7
Working ports size	G 1/4"

	FUNCTION
Ⓕ	**32** = 3 ways
	52 = 5 ways

5 ways

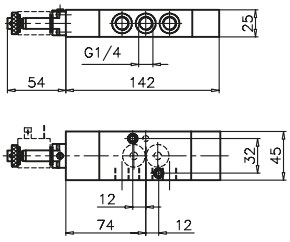

Weight 450 g
Minimum working pressure 2,5 bar

514/N.52.0.12.M2

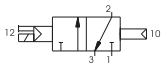

3 ways

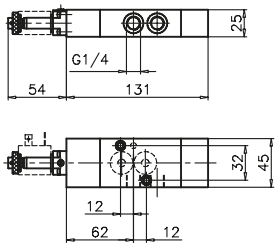

Weight 390 g
Minimum working pressure 2,5 bar

514/N.32.0.12.M2

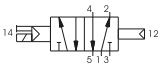

Solenoid-Solenoid

Coding: 514/N.Ⓕ.0.0.M2

Operational characteristics	
Fluid	Filtered air. No lubrication needed, if applied it shall be continuous
Max working pressure (bar)	10
Temperature °C	-10 ÷ +50
Flow rate at 6 bar with Δp=1 (Nl/min)	1030
Orifice size (mm)	7
Working ports size	G 1/4"

	FUNCTION
Ⓕ	**32** = 3 ways
	52 = 5 ways

3 ways

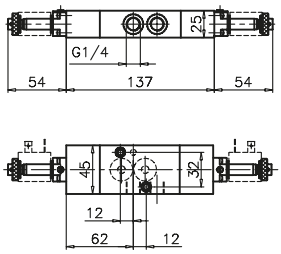

Weight 390 g
Minimum working pressure 2,5 bar

514/N.32.0.0.M2

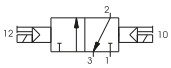

5 ways

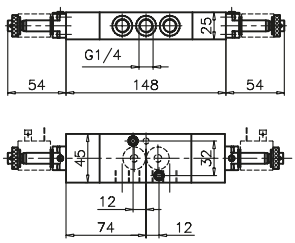

Weight 450 g
Minimum working pressure 2,5 bar

514/N.52.0.0.M2

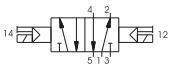

Overall dimensions and technical information are provided solely for informative purposes and may be modified without notice

Series T514

General

TECNO-NAMUR are 5/2 and 4/2 valves are solenoid valves pneumatically or electrically actuated. They are used in industrial automation applications or whenever a **NAMUR** mounting plane is available.
Is available in 5/2, 4/2 and all-purposes versions. The final user can switch from one version to another by simply changing interface plate and adding/removing a plug.
TECNO-NAMUR valves are produced using the most up to date technical features, granting flexible design and elevated characteristics over standard products. Superior performance is further enhanced by the use of innovative materials of construction.

Construction characteristics

Body	Technopolymer
Spacer	Technopolymer
Seals	Nitrile rubber
Springs	Stainless Steel
Operators	Technopolymer
Spools	Nickel plated steel
Screws	Zinc coated Steel

Note:
"Although accurately described, the 4/2 valve actually functions as a 3/2 normally closed valve and should be used as such."

"NAMUR" interface dimensions:
according to standard (VDI/VDE 3847 July 2003)

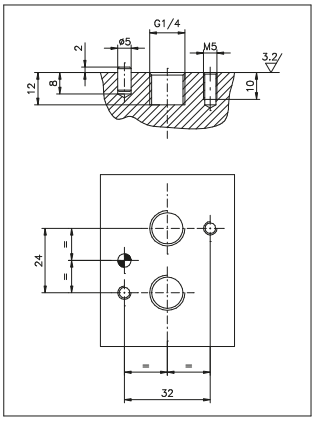

Pneumatic - Differential

Coding: T514.Ⓕ.00.16

Operational characteristics	
Fluid	Filtered air. No lubrication needed, if applied it shall be continuous
Max working pressure (bar)	10
Temperature °C	-10 ÷ +50
Flow rate at 6 bar with Δp=1 (Nl/min)	1100
Orifice size (mm)	8
Working ports size	G 1/4"

Ⓕ	FUNCTION
	42 = 4 ways
	52 = 5 ways

4 ways

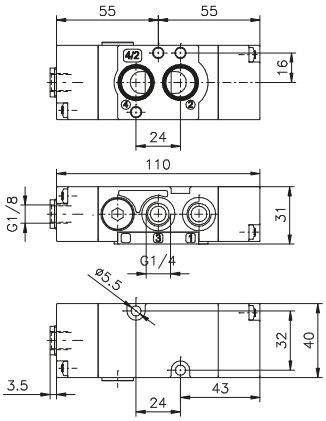

Weight 140 g
Minimum working pressure 2,5 bar
Maximum fitting torque 9 N/m

T514.42.00.16

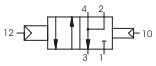

5 ways

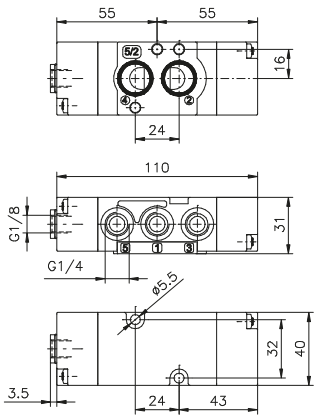

Weight 140 g
Minimum working pressure 2,5 bar
Maximum fitting torque 9 N/m

T514.52.00.16

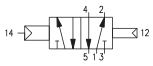

Pneumatic - Pneumatic

Coding: T514.Ⓕ.00.18

Operational characteristics	
Fluid	Filtered air. No lubrication needed, if applied it shall be continuous
Max working pressure (bar)	10
Temperature °C	-10 ÷ +50
Flow rate at 6 bar with Δp=1 (Nl/min)	1100
Orifice size (mm)	8
Working ports size	G 1/4"

Ⓕ	FUNCTION
	42 = 4 ways
	52 = 5 ways

4 ways

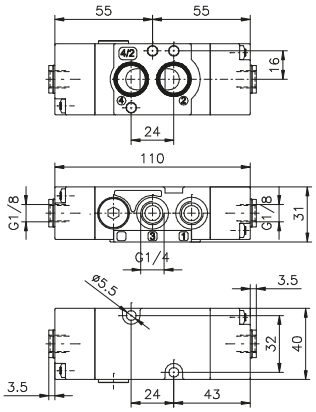

Weight 140 g
Minimum working pressure 2,5 bar
Maximum fitting torque 9 N/m

T514.42.00.18

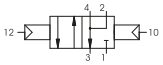

5 ways

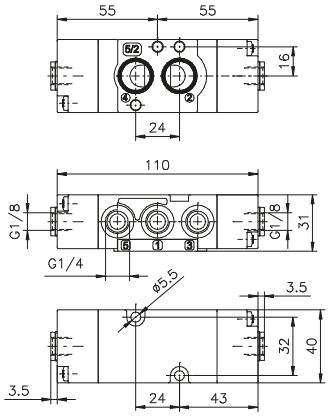

Weight 140 g
Minimum working pressure 2,5 bar
Maximum fitting torque 9 N/m

T514.52.00.18

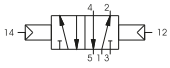

Overall dimensions and technical information are provided solely for informative purposes and may be modified without notice

Pneumatic - Spring

Coding: T514.Ⓕ.00.19

Operational characteristics	
Fluid	Filtered air. No lubrication needed, if applied it shall be continuous
Max working pressure (bar)	10
Temperature °C	-10 ÷ +50
Flow rate at 6 bar with Δp=1 (Nl/min)	1100
Orifice size (mm)	8
Working ports size	G 1/4"

	FUNCTION
Ⓕ	**42** = 4 ways
	52 = 5 ways

4 ways

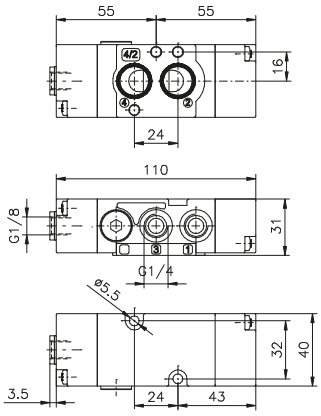

Weight 140 g
Minimum working pressure 2,5 bar
Maximum fitting torque 9 N/m

T514.42.00.19

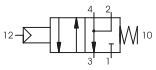

5 ways

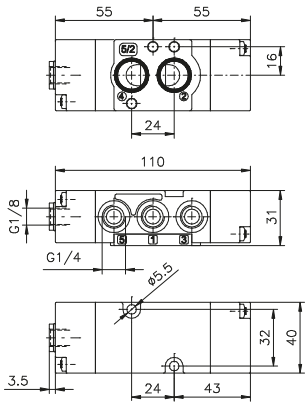

Weight 140 g
Minimum working pressure 2,5 bar
Maximum fitting torque 9 N/m

T514.52.00.19

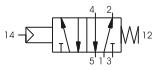

Solenoid-Solenoid

Coding: T514.Ⓕ.00.35.Ⓣ

Operational characteristics	
Fluid	Filtered air. No lubrication needed, if applied it shall be continuous
Max working pressure (bar)	10
Temperature °C	-10 ÷ +50
Flow rate at 6 bar with Δp=1 (Nl/min)	1100
Orifice size (mm)	8
Working ports size	G 1/4"

	FUNCTION
Ⓕ	**42** = 4 ways
	52 = 5 ways

	VOLTAGE		
Ⓣ	**B04**	=	12 VDC
	B05	=	24 VDC
	B09	=	24 VDC (2W)
	B56	=	24V (50-60 Hz)
	B57	=	110V (50-60 Hz)
	B58	=	230 V (50-60 Hz)

4 ways

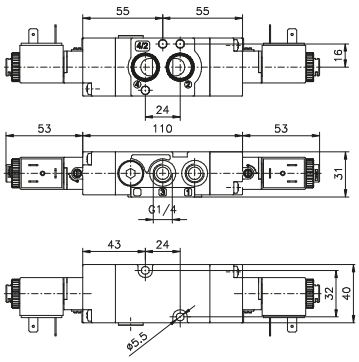

Weight 250 g
Minimum working pressure 2,5 bar
Maximum fitting torque 9 N/m

T514.42.00.35.Ⓣ

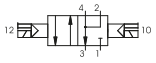

5 ways

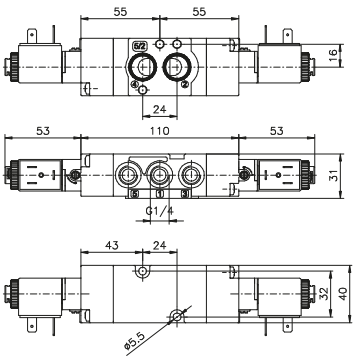

Weight 250 g
Minimum working pressure 2,5 bar
Maximum fitting torque 9 N/m

T514.52.00.35.Ⓣ

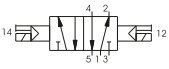

Solenoid-Differential

Coding: T514.Ⓕ.00.36.Ⓣ

Operational characteristics	
Fluid	Filtered air. No lubrication needed, if applied it shall be continuous
Max working pressure (bar)	10
Temperature °C	-10 ÷ +50
Flow rate at 6 bar with Δp=1 (Nl/min)	1100
Orifice size (mm)	8
Working ports size	G 1/4"

	FUNCTION
Ⓕ	**42** = 4 ways
	52 = 5 ways

	VOLTAGE	
Ⓣ	**B04** =	12 VDC
	B05 =	24 VDC
	B09 =	24 VDC (2W)
	B56 =	24V (50-60 Hz)
	B57 =	110V (50-60 Hz)
	B58 =	230 V (50-60 Hz)

4 ways

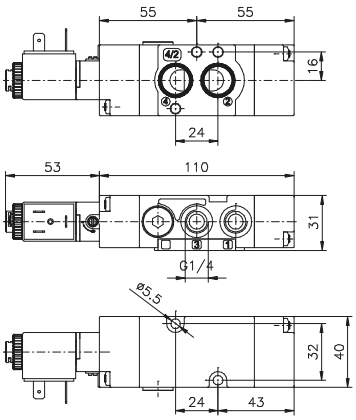

Weight 200 g
Minimum working pressure 2,5 bar
Maximum fitting torque 9 N/m

T514.42.00.36.Ⓣ

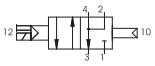

5 ways

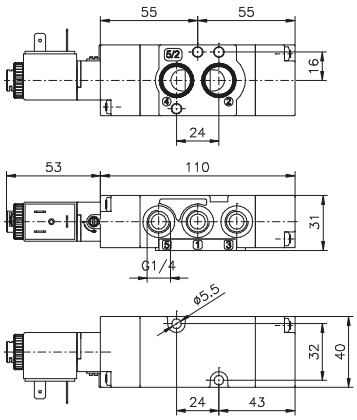

Weight 200 g
Minimum working pressure 2,5 bar
Maximum fitting torque 9 N/m

T514.52.00.36.Ⓣ

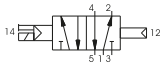

Solenoid - Spring

Coding: T514.Ⓕ.00.39.Ⓣ

Operational characteristics	
Fluid	Filtered air. No lubrication needed, if applied it shall be continuous
Max working pressure (bar)	10
Temperature °C	-10 ÷ +50
Flow rate at 6 bar with Δp=1 (Nl/min)	1100
Orifice size (mm)	8
Working ports size	G 1/4"

	FUNCTION
Ⓕ	**42** = 4 ways
	52 = 5 ways

	VOLTAGE	
Ⓣ	**B04** =	12 VDC
	B05 =	24 VDC
	B09 =	24 VDC (2W)
	B56 =	24V (50-60 Hz)
	B57 =	110V (50-60 Hz)
	B58 =	230 V (50-60 Hz)

4 ways

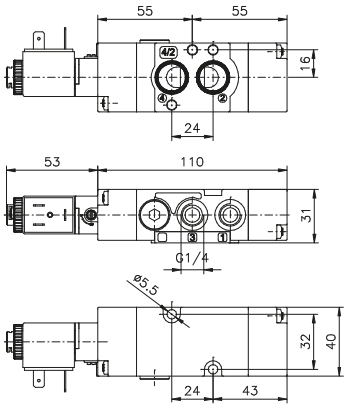

Weight 200 g
Minimum working pressure 2,5 bar
Maximum fitting torque 9 N/m

T514.42.00.39.Ⓣ

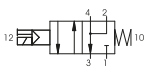

5 ways

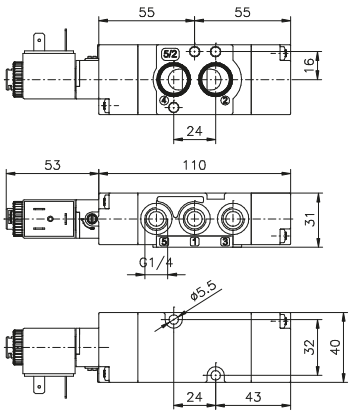

Weight 200 g
Minimum working pressure 2,5 bar
Maximum fitting torque 9 N/m

T514.52.00.39.Ⓣ

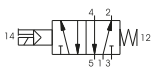

Overall dimensions and technical information are provided solely for informative purposes and may be modified without notice

Universal kit

Coding: T514.92.00.Ⓥ.Ⓣ

Operational characteristics	
Fluid	Filtered air. No lubrication needed, if applied it shall be continuous
Max working pressure (bar)	10
Temperature °C	-10 ÷ +50
Flow rate at 6 bar with Δp=1 (Nl/min)	1100
Orifice size (mm)	8
Working ports size	G 1/4"

	VERSION		VOLTAGE		
Ⓥ	**16** = Pneumatic - Differential	Ⓣ	**B04**	=	12 VDC
	18 = Pneumatic - Pneumatic		**B05**	=	24 VDC
	19 = Pneumatic - Spring		**B09**	=	24 VDC (2W)
	35 = Solenoid - Solenoid		**B56**	=	24V (50-60 Hz)
	36 = Solenoid - Differential		**B57**	=	110V (50-60 Hz)
	39 = Solenoid - Spring		**B58**	=	230 V (50-60 Hz)

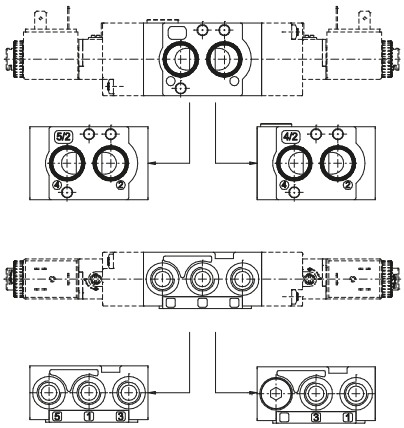

Weight 170 g
Minimum working pressure 2,5 bar
Maximum fitting torque 9 N/m

Series 514

General

NAMUR valves are 5/2 and 4/2 valves and electrovalves, piloted electrically or pneumatically, utilised primarily to operate rotary actuators and wherever there is a NAMUR standard installation plan.
The product is classified for use in potentially explosive atmospheres (Directive 2014/34/EU).
NAMUR valves have been developed using the latest, technical design solutions which guarantee flexibility and an increased flow rate capacity exceeding that of traditional, spool valves.
In addition, they have been produced with innovative materials which guarantee increased performance.

Note:
"Although accurately described, the 4/2 valve actually functions as a 3/2 normally closed valve and should be used as such."

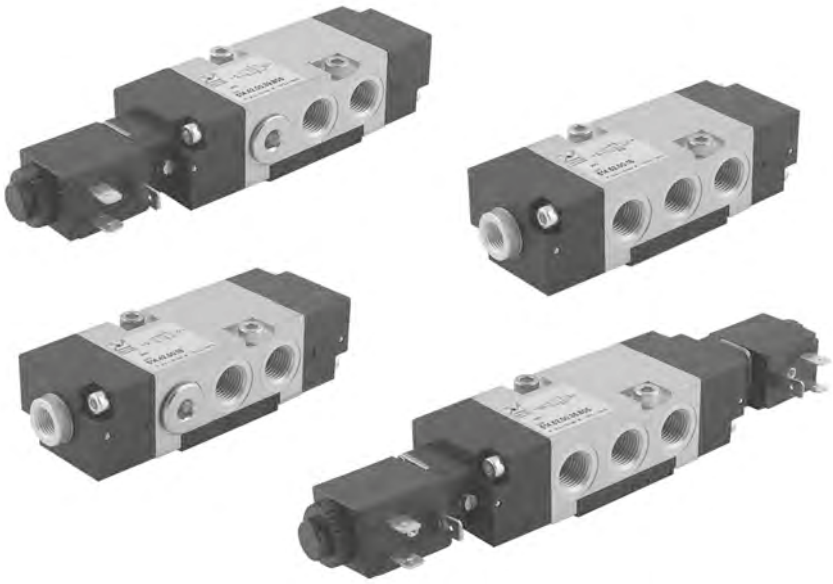

"NAMUR" interface dimensions:
according to standard (VDI/VDE 3847 July 2003)

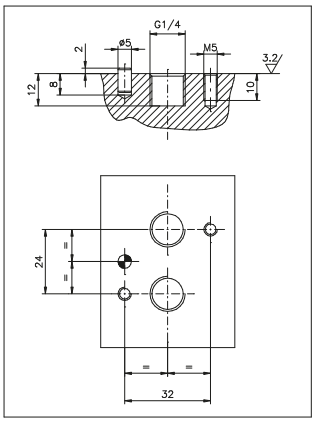

Construction characteristics

Body	Aluminium
Spacer	Technopolymer
Seals	Nitrile rubber
Springs	Stainless Steel
Operators	Technopolymer
Spools	Steel
Screws	Zinc coated Steel / Stainless steel

Certifications available:

SOLENOID VALVES WITH XMB OR XMC 3GD COIL

: CE Ex II 3G Ex h IIB T4 Gc X
CE Ex II 3D Ex h IIIC T120°C Dc X IP65

MECHANICAL AND PNEUMATIC VALVES WITHOUT COILS

: CE Ex II 2G Ex h IIB T5 Gc X
CE Ex II 2D Ex h IIIC T96°C Dc X IP65

Overall dimensions and technical information are provided solely for informative purposes and may be modified without notice

Pneumatic - Differential

Coding: Ⓜ514.Ⓕ.00.16Ⓞ

Operational characteristics	
Fluid	Filtered air. No lubrication needed, if applied it shall be continuous
Max working pressure (bar)	10
Temperature °C	Standard valves (-10 ... +50) Low temperature valves (-30 ... +50) ATEX valves (-20 ... +40)
Flow rate at 6 bar with Δp=1 (Nl/min)	1100
Orifice size (mm)	8
Working ports size	G 1/4"

Ⓜ	MODEL
	= Standard valve
	X = ATEX valve
Ⓕ	FUNCTION
	42 = 4 ways
	52 = 5 ways
Ⓞ	TEMPERATURE OPTIONS
	= Standard valves (-10 ... +50)
	LT = Low temperature valves (-30 ... +50)
	= ATEX valves (-20 ... +40)

Minimum pilot pressure 2,5 bar
Maximum fitting torque 9 N/m

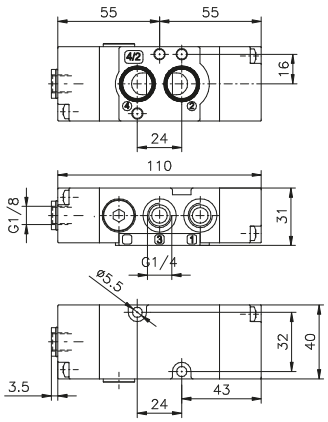

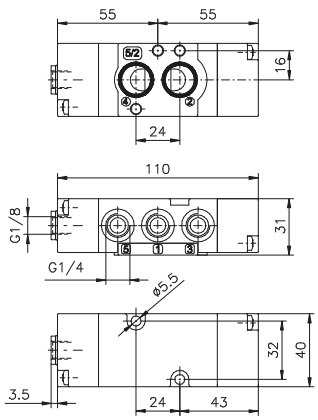

Ⓜ514.42.00.16.Ⓞ Weight 240 g

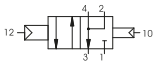

Ⓜ514.52.00.16.Ⓞ Weight 235 g

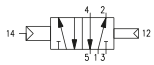

Pneumatic - Pneumatic

Coding: Ⓜ514.Ⓕ.00.18Ⓞ

Operational characteristics	
Fluid	Filtered air. No lubrication needed, if applied it shall be continuous
Max working pressure (bar)	10
Temperature °C	Standard valves (-10 ... +50) Low temperature valves (-30 ... +50) ATEX valves (-20 ... +40)
Flow rate at 6 bar with Δp=1 (Nl/min)	1100
Orifice size (mm)	8
Working ports size	G 1/4"

Ⓜ	MODEL
	= Standard valve
	X = ATEX valve
Ⓕ	FUNCTION
	42 = 4 ways
	52 = 5 ways
Ⓞ	TEMPERATURE OPTIONS
	= Standard valves (-10 ... +50)
	LT = Low temperature valves (-30 ... +50)
	= ATEX valves (-20 ... +40)

Minimum pilot pressure 2,5 bar
Maximum fitting torque 9 N/m

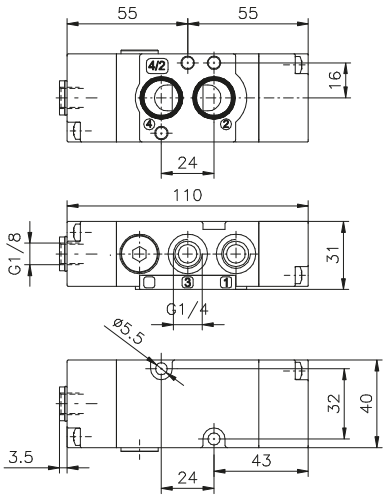

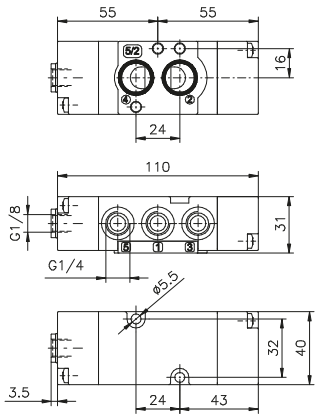

Ⓜ514.42.00.18.Ⓞ Weight 240 g

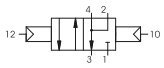

Ⓜ514.52.00.18.Ⓞ Weight 235 g

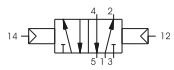

Pneumatic - Spring

Operational characteristics	
Fluid	Filtered air. No lubrication needed, if applied it shall be continuous
Max working pressure (bar)	10
Temperature °C	Standard valves (-10 ... +50) Low temperature valves (-30 ... +50) ATEX valves (-20 ... +40)
Flow rate at 6 bar with Δp=1 (Nl/min)	1100
Orifice size (mm)	8
Working ports size	G 1/4"

Coding: Ⓜ514.Ⓕ.00.19Ⓞ

Ⓜ	MODEL
	= Standard valve
	X = ATEX valve
Ⓕ	FUNCTION
	42 = 4 ways
	52 = 5 ways
Ⓞ	TEMPERATURE OPTIONS
	= Standard valves (-10 ... +50)
	LT = Low temperature valves (-30 ... +50)
	= ATEX valves (-20 ... +40)

Minimum pilot pressure 2,5 bar
Maximum fitting torque 9 N/m

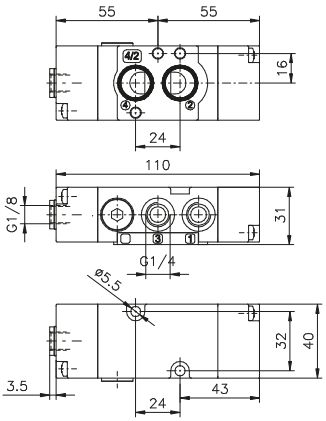

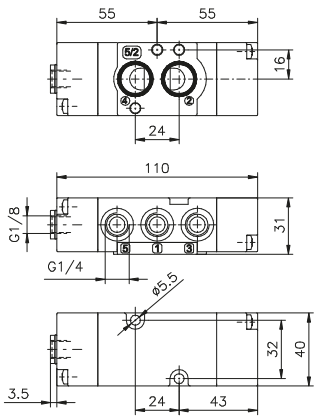

Ⓜ514.42.00.19.Ⓞ Weight 240 g

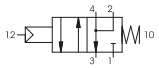

Ⓜ514.52.00.19.Ⓞ Weight 235 g

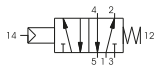

Overall dimensions and technical information are provided solely for informative purposes and may be modified without notice

Solenoid-Solenoid

Operational characteristics	
Fluid	Filtered air. No lubrication needed, if applied it shall be continuous
Max working pressure (bar)	10
Temperature °C	Standard valves (-10 ... +50) Low temperature valves (-30 ... +50) ATEX valves (-20 ... +40)
Flow rate at 6 bar with Δp=1 (Nl/min)	1100
Orifice size (mm)	8
Working ports size	G 1/4"

Coding: Ⓜ514.Ⓕ.00.35ⓉⓄ

Ⓜ	MODEL	
	= Standard valve	
	X = ATEX valve	
Ⓕ	FUNCTION	
	42 = 4 ways	
	52 = 5 ways	
Ⓣ	VOLTAGE	
	B04 =	12 VDC
	B05 =	24 VDC
	B09 =	24 VDC (2W)
	B56 =	24V (50-60 Hz)
	B57 =	110V (50-60 Hz)
	B58 =	230 V (50-60 Hz)
	C04 =	12 VDC
	C05 =	24 VDC
	C09 =	24 VDC (2W)
	C56 =	24 V (50-60 Hz)
	C57 =	110 V (50-60 Hz)
	C58 =	230 V (50-60 Hz)
	F04 =	12 VDC
	F05 =	24 VDC
	F56 =	24 V (50-60 Hz)
	F57 =	110 V (50-60 Hz)
	F58 =	230 V (50-60 Hz)
Ⓞ	TEMPERATURE OPTIONS	
	= Standard valves (-10 ... +50)	
	LT = Low temperature valves (-30 ... +50)	
	= ATEX valves (-20 ... +40)	

Minimum pilot pressure 2,5 bar
Maximum fitting torque 9 N/m
"LT" and "ATEX" versions are not available with MF coils

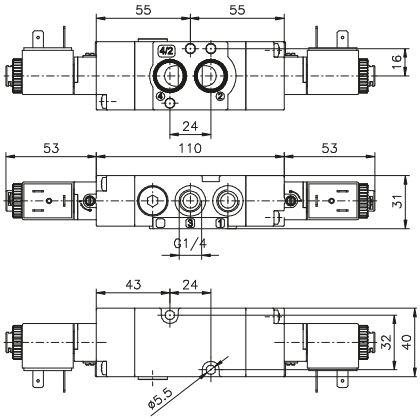

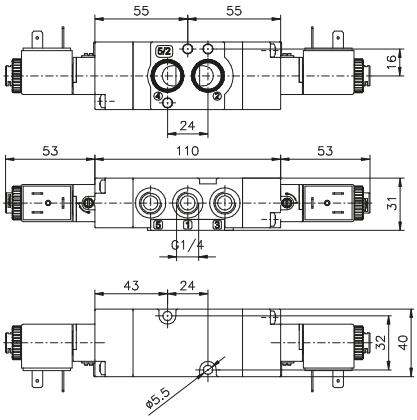

Ⓜ514.42.00.35.Ⓞ Weight 410 g

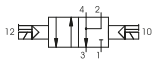

Ⓜ514.52.00.35.Ⓞ Weight 405 g

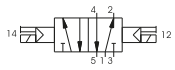

Solenoid-Differential

Operational characteristics	
Fluid	Filtered air. No lubrication needed, if applied it shall be continuous
Max working pressure (bar)	10
Temperature °C	Standard valves (-10 ... +50) Low temperature valves (-30 ... +50) ATEX valves (-20 ... +40)
Flow rate at 6 bar with Δp=1 (Nl/min)	1100
Orifice size (mm)	8
Working ports size	G 1/4"

Coding: Ⓜ514.Ⓕ.00.36ⓉⓄ

Ⓜ	MODEL	
	= Standard valve	
	X = ATEX valve	
Ⓕ	FUNCTION	
	42 = 4 ways	
	52 = 5 ways	
Ⓣ	VOLTAGE	
	B04 =	12 VDC
	B05 =	24 VDC
	B09 =	24 VDC (2W)
	B56 =	24V (50-60 Hz)
	B57 =	110V (50-60 Hz)
	B58 =	230 V (50-60 Hz)
	C04 =	12 VDC
	C05 =	24 VDC
	C09 =	24 VDC (2W)
	C56 =	24 V (50-60 Hz)
	C57 =	110 V (50-60 Hz)
	C58 =	230 V (50-60 Hz)
	F04 =	12 VDC
	F05 =	24 VDC
	F56 =	24 V (50-60 Hz)
	F57 =	110 V (50-60 Hz)
	F58 =	230 V (50-60 Hz)
Ⓞ	TEMPERATURE OPTIONS	
	= Standard valves (-10 ... +50)	
	LT = Low temperature valves (-30 ... +50)	
	= ATEX valves (-20 ... +40)	

Minimum pilot pressure 2,5 bar
Maximum fitting torque 9 N/m
“LT” and “ATEX” versions are not available with MF coils

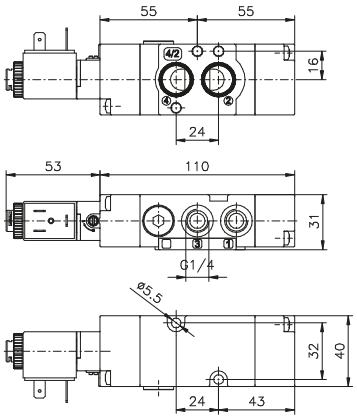

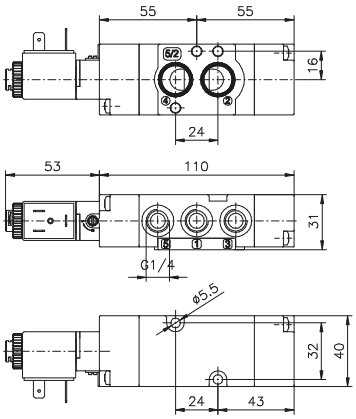

Ⓜ514.42.00.36.Ⓣ.Ⓞ Weight 330 g

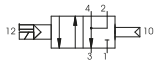

Ⓜ514.52.00.36.Ⓣ.Ⓞ Weight 325 g

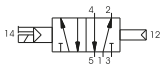

Overall dimensions and technical information are provided solely for informative purposes and may be modified without notice

Solenoid - Spring

Operational characteristics	
Fluid	Filtered air. No lubrication needed, if applied it shall be continuous
Max working pressure (bar)	10
Temperature °C	Standard valves (-10 ... +50) Low temperature valves (-30 ... +50) ATEX valves (-20 ... +40)
Flow rate at 6 bar with Δp=1 (Nl/min)	1100
Orifice size (mm)	8
Working ports size	G 1/4"

Coding: Ⓜ514.Ⓕ.00.39ⓉⓄ

Ⓜ	MODEL	
	= Standard valve	
	X = ATEX valve	
Ⓕ	FUNCTION	
	42 = 4 ways	
	52 = 5 ways	
Ⓣ	VOLTAGE	
	B04 =	12 VDC
	B05 =	24 VDC
	B09 =	24 VDC (2W)
	B56 =	24V (50-60 Hz)
	B57 =	110V (50-60 Hz)
	B58 =	230 V (50-60 Hz)
	C04 =	12 VDC
	C05 =	24 VDC
	C09 =	24 VDC (2W)
	C56 =	24 V (50-60 Hz)
	C57 =	110 V (50-60 Hz)
	C58 =	230 V (50-60 Hz)
	F04 =	12 VDC
	F05 =	24 VDC
	F56 =	24 V (50-60 Hz)
	F57 =	110 V (50-60 Hz)
	F58 =	230 V (50-60 Hz)
Ⓞ	TEMPERATURE OPTIONS	
	= Standard valves (-10 ... +50)	
	LT = Low temperature valves (-30 ... +50)	
	= ATEX valves (-20 ... +40)	

Minimum pilot pressure 2,5 bar
Maximum fitting torque 9 N/m
"LT" and "ATEX" versions are not available with MF coils

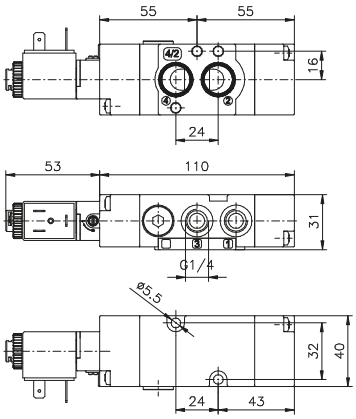

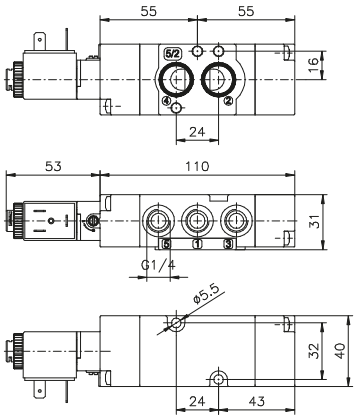

Ⓜ514.42.00.39.Ⓣ.Ⓞ Weight 330 g

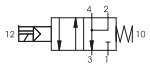

Ⓜ514.52.00.39.Ⓣ.Ⓞ Weight 325 g

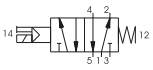

Universal kit

Operational characteristics	
Fluid	Filtered air. No lubrication needed, if applied it shall be continuous
Max working pressure (bar)	10
Temperature °C	Standard valves (-10 ... +50) Low temperature valves (-30 ... +50) ATEX valves (-20 ... +40)
Flow rate at 6 bar with Δp=1 (Nl/min)	1100
Orifice size (mm)	8
Working ports size	G 1/4"

Coding: Ⓜ514.92.00.Ⓥ.ⓉⓄ

Ⓜ	MODEL
	= Standard valve
	X = ATEX valve
Ⓥ	VERSION
	16 = Pneumatic - Differential
	18 = Pneumatic - Pneumatic
	19 = Pneumatic - Spring
	35 = Solenoid - Solenoid
	36 = Solenoid - Differential
	39 = Solenoid - Spring
Ⓣ	VOLTAGE
	B04 = 12 VDC
	B05 = 24 VDC
	B09 = 24 VDC (2W)
	B56 = 24V (50-60 Hz)
	B57 = 110V (50-60 Hz)
	B58 = 230 V (50-60 Hz)
	C04 = 12 VDC
	C05 = 24 VDC
	C09 = 24 VDC (2W)
	C56 = 24 V (50-60 Hz)
	C57 = 110 V (50-60 Hz)
	C58 = 230 V (50-60 Hz)
	F04 = 12 VDC
	F05 = 24 VDC
	F56 = 24 V (50-60 Hz)
	F57 = 110 V (50-60 Hz)
	F58 = 230 V (50-60 Hz)
Ⓞ	TEMPERATURE OPTIONS
	= Standard valves (-10 ... +50)
	LT = Low temperature valves (-30 ... +50)
	= ATEX valves (-20 ... +40)

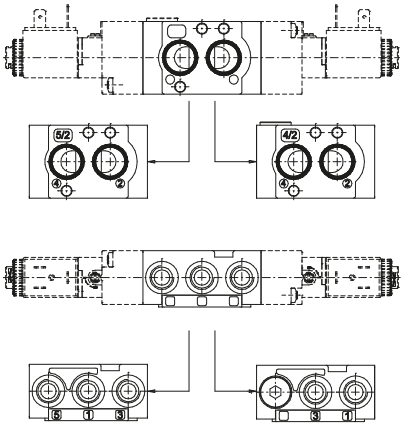

Minimum pilot pressure 2,5 bar
Maximum fitting torque 9 N/m
"LT" and "ATEX" versions are not available with MF coils
To change a 5/2 valve into a 4/2:
Simply replace the bottom plate with the one included in the universal kit (cod. 514.92....) and by plugging port 5

Weight 405 g

Overall dimensions and technical information are provided solely for informative purposes and may be modified without notice

Series 515

General

NAMUR valves are 5/2 and 4/2 valves and electrovalves, piloted electrically or pneumatically, utilised primarily to operate rotary actuators and wherever there is a **NAMUR** standard installation plan.
The product is classified for use in potentially explosive atmospheres (Directive 2014/34/EU).
NAMUR valves have been developed using the latest, technical design solutions which guarantee flexibility and an increased flow rate capacity exceeding that of traditional, spool valves.
In addition, they have been produced with innovative materials which guarantee increased performance.

IMPORTANT:

Differs from version 514 because it is supplied without a plate.

**"NAMUR" interface dimensions:
according to standard (VDI/VDE 3847 July 2003)**

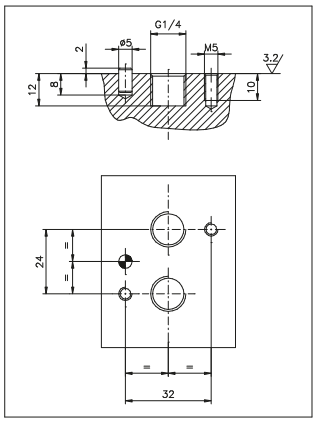

Construction characteristics

Body	Aluminium
Spacer	Technopolymer
Seals	Nitrile rubber
Springs	Stainless Steel
Operators	Technopolymer
Spools	Steel
Screws	Zinc coated Steel / Stainless steel

Certifications available:

SOLENOID VALVES WITH XMB OR XMC 3GD COIL

: CE Ex II 3G Ex h IIB T4 Gc X
CE Ex II 3D Ex h IIIC T120°C Dc X IP65

MECHANICAL AND PNEUMATIC VALVES WITHOUT COILS

: CE Ex II 2G Ex h IIB T5 Gc X
CE Ex II 2D Ex h IIIC T96°C Dc X IP65

Pneumatic - Differential

Coding: Ⓜ515.52.00.16◉

Operational characteristics	
Fluid	Filtered air. No lubrication needed, if applied it shall be continuous
Max working pressure (bar)	10
Temperature °C	Standard valves (-10 ... +50) Low temperature valves (-30 ... +50) ATEX valves (-20 ... +40)
Flow rate at 6 bar with Δp=1 (Nl/min)	1100
Orifice size (mm)	8
Working ports size	G 1/4"

	MODEL
Ⓜ	= Standard valve
	X = ATEX valve

	TEMPERATURE OPTIONS
◉	= Standard valves (-10 ... +50)
	LT = Low temperature valves (-30 ... +50)
	= ATEX valves (-20 ... +40)

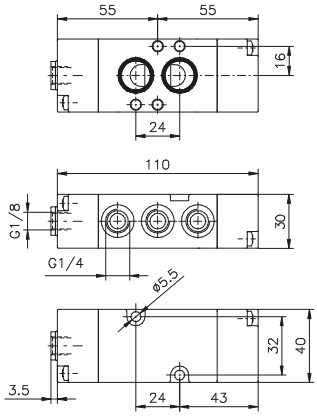

Weight 245 g
Minimum pilot pressure 2,5 bar
Maximum fitting torque 9 N/m

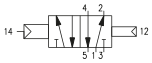

Pneumatic - Pneumatic

Coding: Ⓜ515.52.00.18◉

Operational characteristics	
Fluid	Filtered air. No lubrication needed, if applied it shall be continuous
Max working pressure (bar)	10
Temperature °C	Standard valves (-10 ... +50) Low temperature valves (-30 ... +50) ATEX valves (-20 ... +40)
Flow rate at 6 bar with Δp=1 (Nl/min)	1100
Orifice size (mm)	8
Working ports size	G 1/4"

	MODEL
Ⓜ	= Standard valve
	X = ATEX valve

	TEMPERATURE OPTIONS
◉	= Standard valves (-10 ... +50)
	LT = Low temperature valves (-30 ... +50)
	= ATEX valves (-20 ... +40)

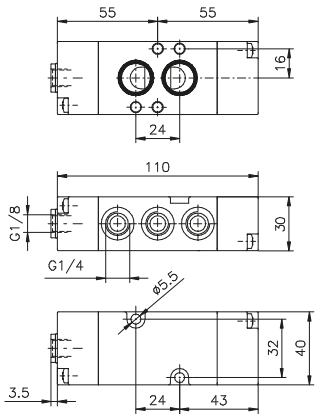

Weight 245 g
Minimum pilot pressure 2,5 bar
Maximum fitting torque 9 N/m

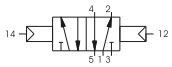

Overall dimensions and technical information are provided solely for informative purposes and may be modified without notice

Pneumatic - Spring

Coding: Ⓜ515.52.00.19◉

Operational characteristics	
Fluid	Filtered air. No lubrication needed, if applied it shall be continuous
Max working pressure (bar)	10
Temperature °C	Standard valves (-10 ... +50) Low temperature valves (-30 ... +50) ATEX valves (-20 ... +40)
Flow rate at 6 bar with Δp=1 (Nl/min)	1100
Orifice size (mm)	8
Working ports size	G 1/4"

	MODEL
Ⓜ	= Standard valve
	X = ATEX valve

	TEMPERATURE OPTIONS
◉	= Standard valves (-10 ... +50)
	LT = Low temperature valves (-30 ... +50)
	= ATEX valves (-20 ... +40)

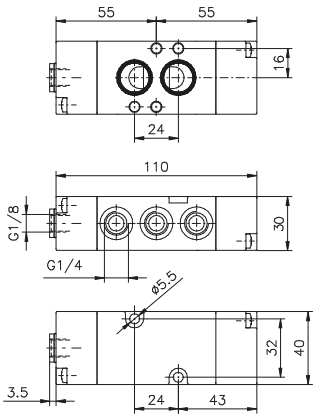

Weight 245 g
Minimum pilot pressure 2,5 bar
Maximum fitting torque 9 N/m

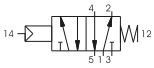

Solenoid-Solenoid

Coding: Ⓜ515.52.00.35.ⓉⓄ

Operational characteristics	
Fluid	Filtered air. No lubrication needed, if applied it shall be continuous
Max working pressure (bar)	10
Temperature °C	Standard valves (-10 ... +50) Low temperature valves (-30 ... +50) ATEX valves (-20 ... +40)
Flow rate at 6 bar with Δp=1 (Nl/min)	1100
Orifice size (mm)	8
Working ports size	G 1/4"

Ⓜ	MODEL -	
	=	Standard valve
	X	= ATEX valve
Ⓣ	VOLTAGE	
	B04	= 12 VDC
	B05	= 24 VDC
	B09	= 24 VDC (2W)
	B56	= 24V (50-60 Hz)
	B57	= 110V (50-60 Hz)
	B58	= 230 V (50-60 Hz)
	C04	= 12 VDC
	C05	= 24 VDC
	C09	= 24 VDC (2W)
	C56	= 24 V (50-60 Hz)
	C57	= 110 V (50-60 Hz)
	C58	= 230 V (50-60 Hz)
	F04	= 12 VDC
	F05	= 24 VDC
	F56	= 24 V (50-60 Hz)
	F57	= 110 V (50-60 Hz)
	F58	= 230 V (50-60 Hz)

Ⓞ	TEMPERATURE OPTIONS	
	=	Standard valves (-10 ... +50)
	LT	= Low temperature valves (-30 ... +50)
	=	ATEX valves (-20 ... +40)

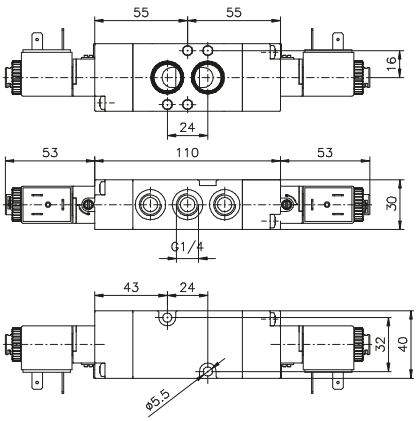

Weight 415 g
Minimum pilot pressure 2,5 bar
Maximum fitting torque 9 N/m

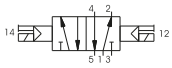

Overall dimensions and technical information are provided solely for informative purposes and may be modified without notice

Solenoid-Differential

Coding: Ⓜ515.52.00.36.ⓉⓄ

Operational characteristics	
Fluid	Filtered air. No lubrication needed, if applied it shall be continuous
Max working pressure (bar)	10
Temperature °C	Standard valves (-10 ... +50) Low temperature valves (-30 ... +50) ATEX valves (-20 ... +40)
Flow rate at 6 bar with Δp=1 (Nl/min)	1100
Orifice size (mm)	8
Working ports size	G 1/4"

Ⓜ	MODEL -	
	=	Standard valve
	X =	ATEX valve
Ⓣ	VOLTAGE	
	B04 =	12 VDC
	B05 =	24 VDC
	B09 =	24 VDC (2W)
	B56 =	24V (50-60 Hz)
	B57 =	110V (50-60 Hz)
	B58 =	230 V (50-60 Hz)
	C04 =	12 VDC
	C05 =	24 VDC
	C09 =	24 VDC (2W)
	C56 =	24 V (50-60 Hz)
	C57 =	110 V (50-60 Hz)
	C58 =	230 V (50-60 Hz)
	F04 =	12 VDC
	F05 =	24 VDC
	F56 =	24 V (50-60 Hz)
	F57 =	110 V (50-60 Hz)
	F58 =	230 V (50-60 Hz)

Ⓞ	TEMPERATURE OPTIONS	
	=	Standard valves (-10 ... +50)
	LT =	Low temperature valves (-30 ... +50)
	=	ATEX valves (-20 ... +40)

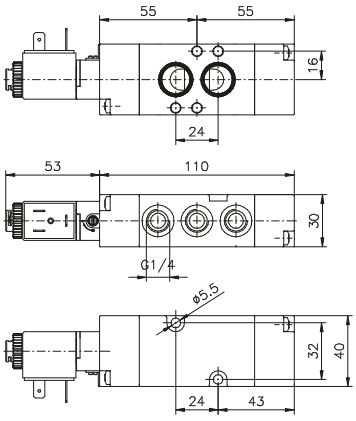

Weight 330 g
Minimum pilot pressure 2,5 bar
Maximum fitting torque 9 N/m

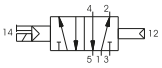

Solenoid - Spring

Coding: Ⓜ515.52.00.39.ⓉⓄ

Operational characteristics	
Fluid	Filtered air. No lubrication needed, if applied it shall be continuous
Max working pressure (bar)	10
Temperature °C	Standard valves (-10 ... +50) Low temperature valves (-30 ... +50) ATEX valves (-20 ... +40)
Flow rate at 6 bar with Δp=1 (Nl/min)	1100
Orifice size (mm)	8
Working ports size	G 1/4"

Ⓜ	MODEL	
	=	Standard valve
	X =	ATEX valve
Ⓣ	VOLTAGE	
	B04 =	12 VDC
	B05 =	24 VDC
	B09 =	24 VDC (2W)
	B56 =	24V (50-60 Hz)
	B57 =	110V (50-60 Hz)
	B58 =	230 V (50-60 Hz)
	C04 =	12 VDC
	C05 =	24 VDC
	C09 =	24 VDC (2W)
	C56 =	24 V (50-60 Hz)
	C57 =	110 V (50-60 Hz)
	C58 =	230 V (50-60 Hz)
	F04 =	12 VDC
	F05 =	24 VDC
	F56 =	24 V (50-60 Hz)
	F57 =	110 V (50-60 Hz)
	F58 =	230 V (50-60 Hz)

Ⓞ	TEMPERATURE OPTIONS	
	=	Standard valves (-10 ... +50)
	LT =	Low temperature valves (-30 ... +50)
	=	ATEX valves (-20 ... +40)

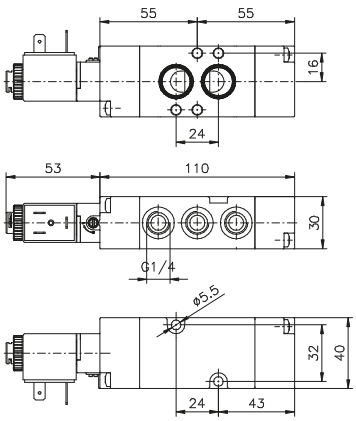

Weight 330 g
Minimum pilot pressure 2,5 bar
Maximum fitting torque 9 N/m

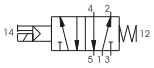

Overall dimensions and technical information are provided solely for informative purposes and may be modified without notice

Series 1000 - Size 1, 2 & 3

General

5 ways 2 or 3 positions distributors and electric distributors can be used mounted on individual or ganged bases.
These standards are ISO 5599/1, according to which certain dimensions are mandatory, namely, the mounting surface, the pitch of the fastening screws, the characteristic of the electric pilot, the flow rate, the pneumatic connections, and so on.
The design is based on the balanced spool principle with pneumatic or electropneumatic actuators and resetting by mechanically or pneumatically operated spring.
The 3 position closed centres, are obtained by spring operation.
The feed to the actuators on the distributors can be provided either by pressure intake from inlet 1(autofeed) or through the base from inlets 12 and 14 (external feed); there are two separate types of these distributors: one is the Series 1000 and the other is the Series 1010.
The Serie 1000 includes size 1 and 2 and are built of die-cast aluminium. The selection is made by turning a seal fitted between body and operator by 180°, so to utilize external-feed pilot or with internal feed.
Ordering codes are referring to distributors with "M2" mechanics or solenoid valves "S" mounted.
Coil are not included and have to be ordored separately (see Series 300).
"S" homologated c UL us solenoid coil are available (see Series 300).

Use and maintenance

This valves have an average life of 15 million cycles depending on the application and air quality.
Filtered and lubricated air using specified lubricants will reduce the wear of the seals and ensures long and trouble free operation.
Make sure that the conditions of use comply with the pressure, temperature etc. limits indicated and that the fastening screws are tightened with the following maximum torques on distributors Serie 1010.
Size 1 = 4 Nm
Size 2 = 5 Nm
Size 3 = 8 Nm
Repair kits including the spool complete with seals are available for overhauling the valves.
However, although this is a simple operation it should be carried out by a competent person.

ATTENTION: use hydraulic oil class H for lubrication such as MAGNA GC 32 (Castrol).

Construction characteristics

Series 1000	**Size 1**	**Size 2**
Body	Zinc alloy	Aluminium
Operators	Zinc alloy	Aluminium
Spools	Steel	Steel
Seals	NBR	NBR
Spacer	Technopolymer	Aluminium
Springs	Spring steel	Spring steel
Selectors	NBR	NBR

Series 1010	**Size 1**	**Size 2**	**Size 3**
Body	Technopolymer	Technopolymer	Aluminium
Operators	Technopolymer	Technopolymer	Aluminium
Spools	Steel	Steel	Steel
Seals	NBR	NBR	NBR
Spacer	Technopolymer	Technopolymer	Technopolymer
Pistons	Aluminium	Aluminium	Aluminium
Springs	Spring steel	Spring steel	Spring steel

Pneumatic - Spring

Coding: 1001.52.1.9

Operational characteristics	
Fluid	Filtered air. No lubrication needed, if applied it shall be continuous
Max working pressure (bar)	10
Temperature °C	-5 ÷ +70
Flow rate at 6 bar with Δp=1 (Nl/min)	840

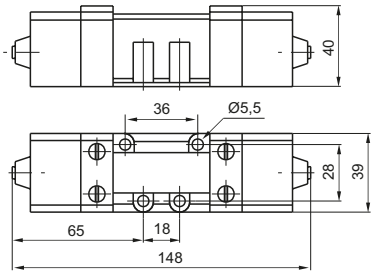

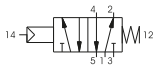

Weight 780 g
Minimum piloting pressure 2,5 bar

Pneumatic - Differential

Coding: 1001.52.1.6

Operational characteristics	
Fluid	Filtered air. No lubrication needed, if applied it shall be continuous
Max working pressure (bar)	10
Temperature °C	-5 ÷ +70
Flow rate at 6 bar with Δp=1 (Nl/min)	840

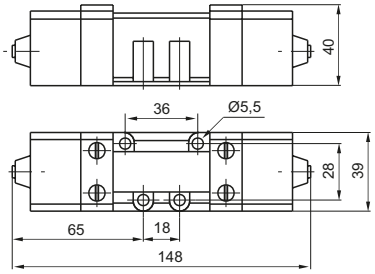

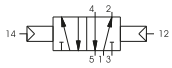

Weight 790 g
Minimum piloting pressure 2 bar

Pneumatic-Pneumatic 5/2

Coding: 1001.52.1.8

Operational characteristics	
Fluid	Filtered air. No lubrication needed, if applied it shall be continuous
Max working pressure (bar)	10
Temperature °C	-5 ÷ +70
Flow rate at 6 bar with Δp=1 (Nl/min)	840

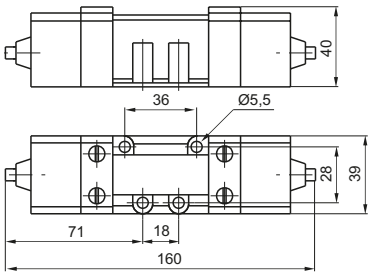

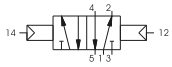

Weight 800 g
Minimum piloting pressure 1,5 bar

Pneumatic-Pneumatic 5/3

Coding: 1001.53.Ⓕ.1.8

Operational characteristics	
Fluid	Filtered air. No lubrication needed, if applied it shall be continuous
Max working pressure (bar)	10
Temperature °C	-5 ÷ +70
Flow rate at 6 bar with Δp=1 (Nl/min)	720

Ⓕ	FUNCTION
	31 = Closed centres
	32 = Open centres
	33 = Pressured centres

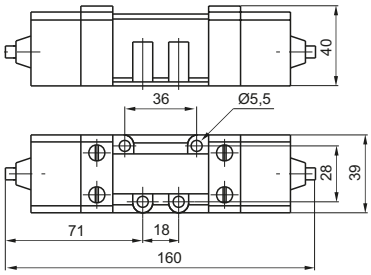

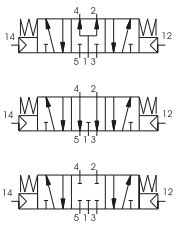

Weight 800 g
Minimum piloting pressure 3 bar

Overall dimensions and technical information are provided solely for informative purposes and may be modified without notice

Solenoid - Spring

Coding: 1051.52.3.9.M2

Operational characteristics	
Fluid	Filtered air. No lubrication needed, if applied it shall be continuous
Max working pressure (bar)	10
Temperature °C	-5 ÷ +50
Flow rate at 6 bar with Δp=1 (Nl/min)	840

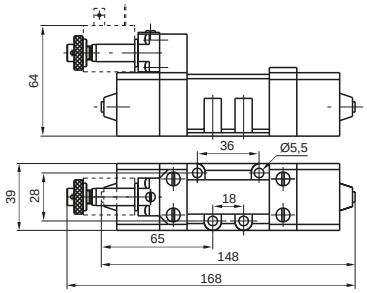

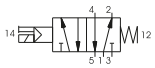

Weight 890 g
Minimum piloting pressure 2,5 bar

Solenoid-Differential

Coding: 1051.52.3.6.M2

Operational characteristics	
Fluid	Filtered air. No lubrication needed, if applied it shall be continuous
Max working pressure (bar)	10
Temperature °C	-5 ÷ +50
Flow rate at 6 bar with Δp=1 (Nl/min)	840

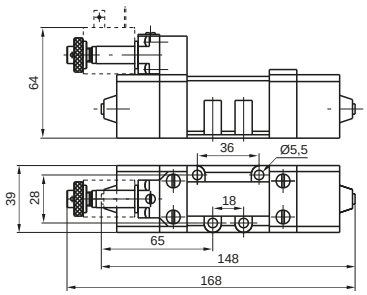

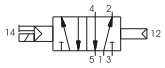

Weight 900 g
Minimum piloting pressure 2 bar

Solenoid-Solenoid 5/2

Coding: 1051.52.3.5.M2

Operational characteristics	
Fluid	Filtered air. No lubrication needed, if applied it shall be continuous
Max working pressure (bar)	10
Temperature °C	-5 ÷ +50
Flow rate at 6 bar with Δp=1 (Nl/min)	840

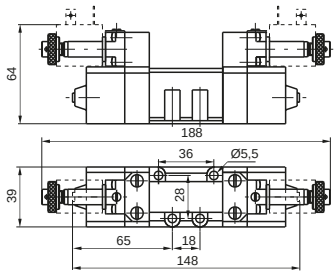

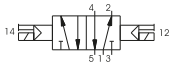

Weight 1040 g
Minimum piloting pressure 1,5 bar

Solenoid-Solenoid 5/3

Coding: 1051.53.Ⓕ.3.5.M2

Operational characteristics	
Fluid	Filtered air. No lubrication needed, if applied it shall be continuous
Max working pressure (bar)	10
Temperature °C	-5 ÷ +50
Flow rate at 6 bar with Δp=1 (Nl/min)	720

	FUNCTION
Ⓕ	**31** = Closed centres
	32 = Open centres
	33 = Pressured centres

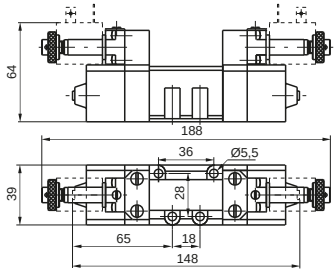

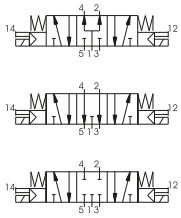

Weight 1040 g
Minimum piloting pressure 3 bar

Pneumatic - Differential

Coding: 1002.52.1.6

Operational characteristics	
Fluid	Filtered air. No lubrication needed, if applied it shall be continuous
Max working pressure (bar)	10
Temperature °C	-5 ÷ +70
Flow rate at 6 bar with Δp=1 (Nl/min)	1700

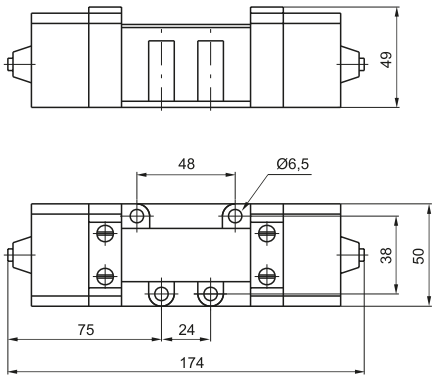

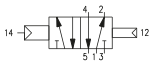

Weight 730 g
Minimum piloting pressure 2 bar

Pneumatic-Pneumatic 5/2

Coding: 1002.52.1.8

Operational characteristics	
Fluid	Filtered air. No lubrication needed, if applied it shall be continuous
Max working pressure (bar)	10
Temperature °C	-5 ÷ +70
Flow rate at 6 bar with Δp=1 (Nl/min)	1700

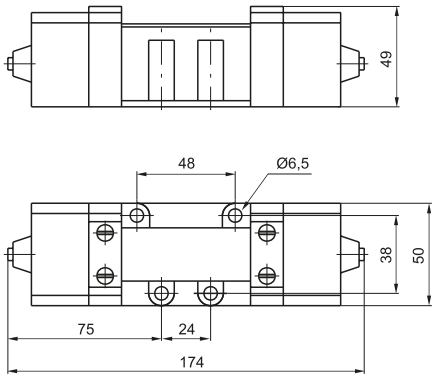

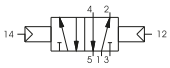

Weight 800 g
Minimum piloting pressure 1,5 bar

Pneumatic-Pneumatic 5/3

Coding: 1002.53.Ⓕ.1.8

Operational characteristics	
Fluid	Filtered air. No lubrication needed, if applied it shall be continuous
Max working pressure (bar)	10
Temperature °C	-5 ÷ +70
Flow rate at 6 bar with Δp=1 (Nl/min)	1700

Ⓕ	FUNCTION
	31 = Closed centres
	32 = Open centres
	33 = Pressured centres

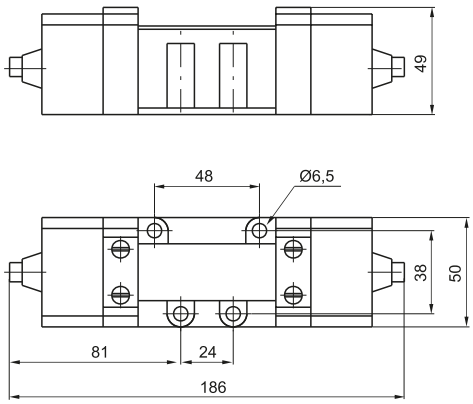

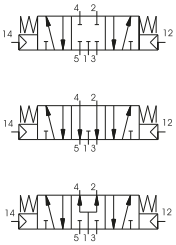

Weight 740 g
Minimum piloting pressure 3 bar

Overall dimensions and technical information are provided solely for informative purposes and may be modified without notice

Solenoid-Differential

Coding: 1052.52.3.6.M2

Operational characteristics	
Fluid	Filtered air. No lubrication needed, if applied it shall be continuous
Max working pressure (bar)	10
Temperature °C	-5 ÷ +50
Flow rate at 6 bar with Δp=1 (Nl/min)	1700

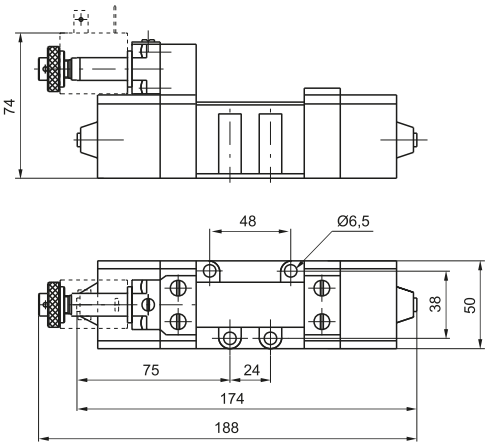

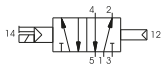

Weight 850 g
Minimum piloting pressure 2 bar

Solenoid-Solenoid 5/2

Coding: 1052.52.3.5.M2

Operational characteristics	
Fluid	Filtered air. No lubrication needed, if applied it shall be continuous
Max working pressure (bar)	10
Temperature °C	-5 ÷ +50
Flow rate at 6 bar with Δp=1 (Nl/min)	1700

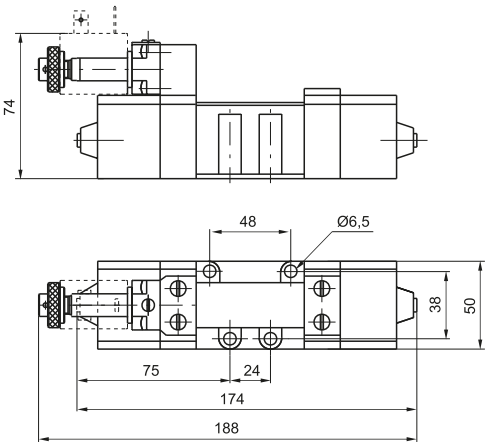

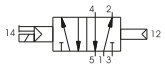

Weight 980 g
Minimum piloting pressure 1,5 bar

Solenoid-Solenoid 5/3

Coding: 1052.53.Ⓕ.3.5.M2

Operational characteristics	
Fluid	Filtered air. No lubrication needed, if applied it shall be continuous
Max working pressure (bar)	10
Temperature °C	-5 ÷ +50
Flow rate at 6 bar with Δp=1 (Nl/min)	1700

Ⓕ	FUNCTION
	31 = Closed centres
	32 = Open centres
	33 = Pressured centres

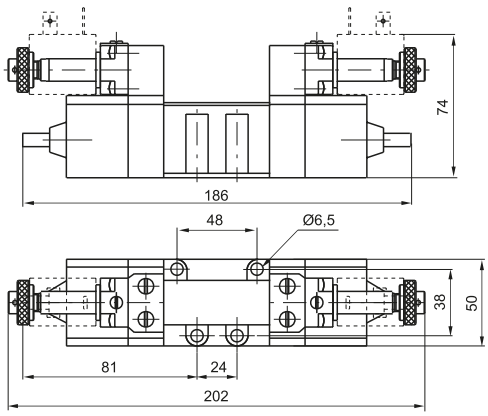

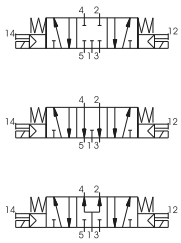

Weight 980 g
Minimum piloting pressure 3 bar

Base for 32 mm Solenoid valve

Coding: 1001.05

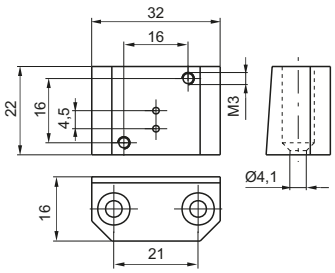

Weight 60 g

Base CNOMO for 32 mm Solenoid valve

Coding: 1001.04

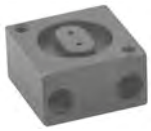

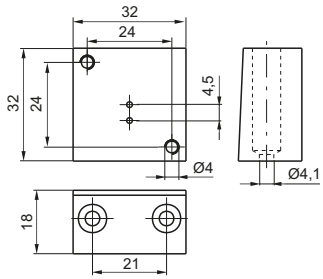

Weight 90 g

Base with bottom connections size 1

Coding: 1001.00

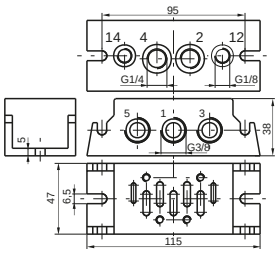

Weight 320 g
1=INLET PORT 2-4=OUTLET PORTS$3-5=EXHAUST PORTS
12-14=PILOT PORTS

Base with side connections size 1

Coding: 1001.01

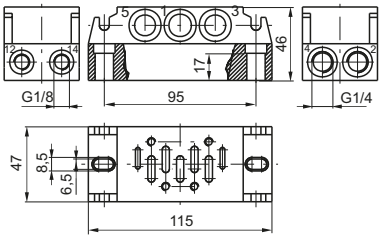

Weight 445 g
1=INLET PORT 2-4=OUTLET PORTS$3-5=EXHAUST PORTS
12-14=PILOT PORTS

Inlet blocks

Coding: 1001.02

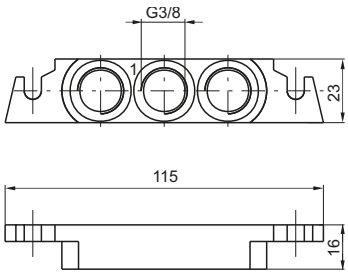

Weight 55 g

Base with bottom connections size 2

Coding: 1002.00

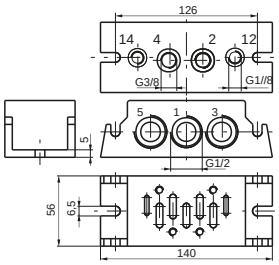

Weight 520 g
1=INLET PORT 2-4=OUTLET PORTS$3-5=EXHAUST PORTS
12-14=PILOT PORTS

Overall dimensions and technical information are provided solely for informative purposes and may be modified without notice

Pneumatic - Spring

Coding: 1011.52.1.9

Operational characteristics	
Fluid	Filtered air. No lubrication needed, if applied it shall be continuous
Max working pressure (bar)	10
Temperature °C	-5 ÷ +50
Flow rate at 6 bar with Δp=1 (Nl/min)	900

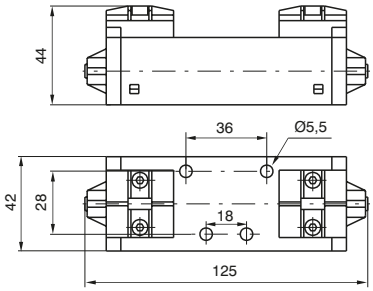

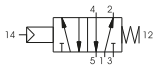

Weight 230 g
Minimum piloting pressure 2,5 bar

Pneumatic - Differential

Coding: 1011.52.1.6

Operational characteristics	
Fluid	Filtered air. No lubrication needed, if applied it shall be continuous
Max working pressure (bar)	10
Temperature °C	-5 ÷ +50
Flow rate at 6 bar with Δp=1 (Nl/min)	900

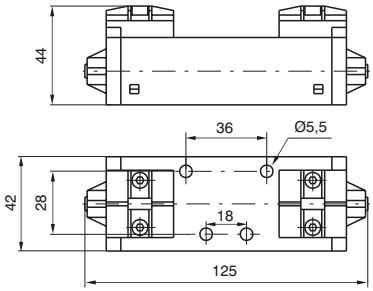

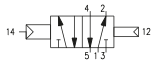

Weight 240 g
Minimum piloting pressure 2 bar

Pneumatic-Pneumatic 5/2

Coding: 1011.52.1.8

Operational characteristics	
Fluid	Filtered air. No lubrication needed, if applied it shall be continuous
Max working pressure (bar)	10
Temperature °C	-5 ÷ +50
Flow rate at 6 bar with Δp=1 (Nl/min)	900

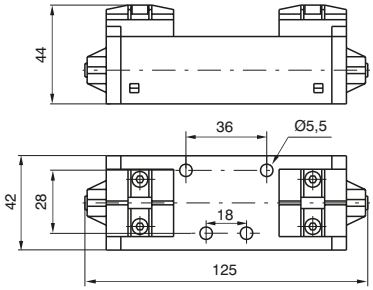

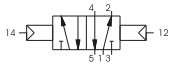

Weight 240 g
Minimum piloting pressure 1,5 bar

Pneumatic-Pneumatic 5/3

Coding: 1011.53.Ⓕ.1.8

Operational characteristics	
Fluid	Filtered air. No lubrication needed, if applied it shall be continuous
Max working pressure (bar)	10
Temperature °C	-5 ÷ +50
Flow rate at 6 bar with Δp=1 (Nl/min)	900

	FUNCTION
Ⓕ	**31** = Closed centres
	32 = Open centres
	33 = Pressured centres

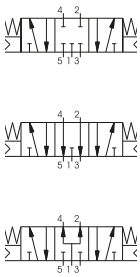

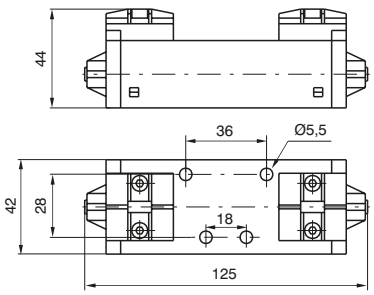

Weight 240 g
Minimum piloting pressure 3 bar

Solenoid - Spring

Coding: 1011.52.3.9.Ⓜ

Operational characteristics	
Fluid	Filtered air. No lubrication needed, if applied it shall be continuous
Max working pressure (bar)	10
Temperature °C	-5 ÷ +50
Flow rate at 6 bar with Δp=1 (Nl/min)	900

Ⓜ	MECHANICAL CODE
	SEE VALVES SERIES 300 CNOMO

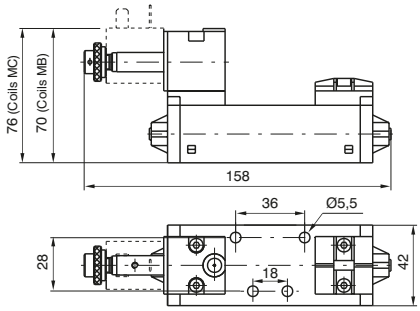

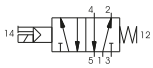

Weight 290 g
Minimum piloting pressure 2,5 bar

Solenoid-Differential

Coding: 1011.52.3.6.Ⓜ

Operational characteristics	
Fluid	Filtered air. No lubrication needed, if applied it shall be continuous
Max working pressure (bar)	10
Temperature °C	-5 ÷ +50
Flow rate at 6 bar with Δp=1 (Nl/min)	900

Ⓜ	MECHANICAL CODE
	SEE VALVES SERIES 300 CNOMO

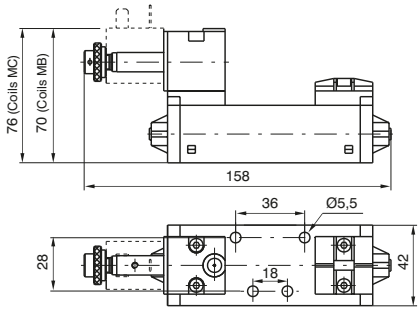

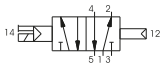

Weight 290 g
Minimum piloting pressure 2 bar

Solenoid-Solenoid 5/2

Coding: 1011.52.3.5.Ⓜ

Operational characteristics	
Fluid	Filtered air. No lubrication needed, if applied it shall be continuous
Max working pressure (bar)	10
Temperature °C	-5 ÷ +50
Flow rate at 6 bar with Δp=1 (Nl/min)	900

Ⓜ	MECHANICAL CODE
	SEE VALVES SERIES 300 CNOMO

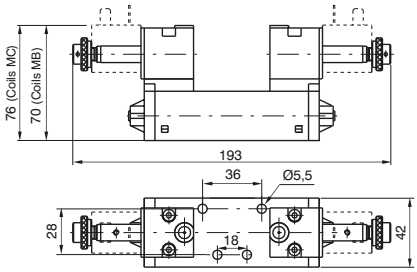

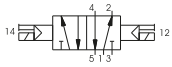

Weight 350 g
Minimum piloting pressure 1,5 bar

Solenoid-Solenoid 5/3

Coding: 1011.53.Ⓕ.3.5.Ⓜ

Operational characteristics	
Fluid	Filtered air. No lubrication needed, if applied it shall be continuous
Max working pressure (bar)	10
Temperature °C	-5 ÷ +50
Flow rate at 6 bar with Δp=1 (Nl/min)	900

Ⓕ	FUNCTION
	31 = Closed centres
	32 = Open centres
	33 = Pressured centres
Ⓜ	MECHANICAL CODE
	SEE VALVES SERIES 300 CNOMO

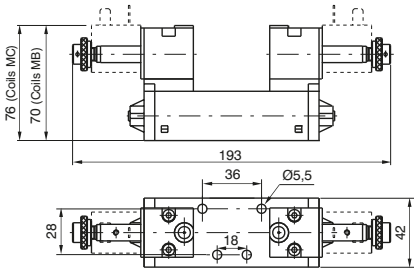

Weight 350 g
Minimum piloting pressure 3 bar

Overall dimensions and technical information are provided solely for informative purposes and may be modified without notice

Pneumatic - Spring

Coding: 1012.52.1.9

Operational characteristics	
Fluid	Filtered air. No lubrication needed, if applied it shall be continuous
Max working pressure (bar)	10
Temperature °C	-5 ÷ +50
Flow rate at 6 bar with Δp=1 (Nl/min)	1600

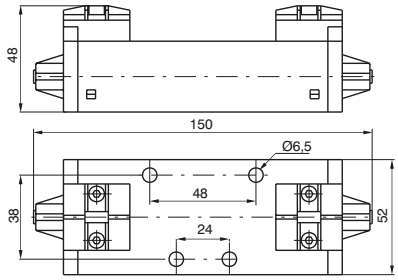

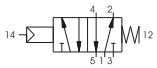

Weight 300 g
Minimum piloting pressure 2,5 bar

Pneumatic - Differential

Coding: 1012.52.1.6

Operational characteristics	
Fluid	Filtered air. No lubrication needed, if applied it shall be continuous
Max working pressure (bar)	10
Temperature °C	-5 ÷ +50
Flow rate at 6 bar with Δp=1 (Nl/min)	1600

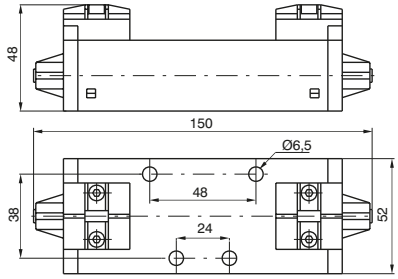

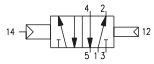

Weight 310 g
Minimum piloting pressure 2 bar

Pneumatic-Pneumatic 5/2

Coding: 1012.52.1.8

Operational characteristics	
Fluid	Filtered air. No lubrication needed, if applied it shall be continuous
Max working pressure (bar)	10
Temperature °C	-5 ÷ +50
Flow rate at 6 bar with Δp=1 (Nl/min)	1600

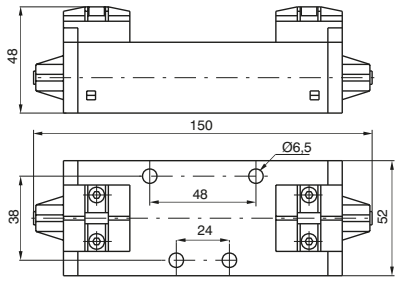

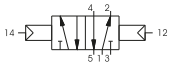

Weight 310 g
Minimum piloting pressure 1,5 bar

Pneumatic-Pneumatic 5/3

Coding:: 1012.53.Ⓕ.1.8

Operational characteristics	
Fluid	Filtered air. No lubrication needed, if applied it shall be continuous
Max working pressure (bar)	10
Temperature °C	-5 ÷ +50
Flow rate at 6 bar with Δp=1 (Nl/min)	1600

	FUNCTION
Ⓕ	**31** = Closed centres
	32 = Open centres
	33 = Pressured centres

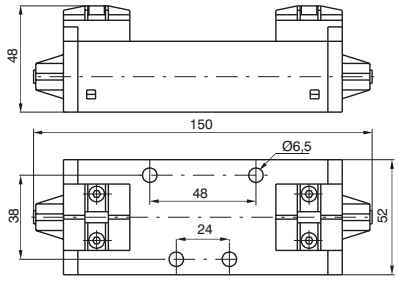

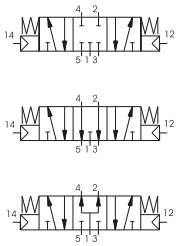

Weight 310 g
Minimum piloting pressure 3 bar

1012.53.Ⓕ.1.8

Solenoid - Spring

Coding: 1012.52.3.9.Ⓜ

Operational characteristics	
Fluid	Filtered air. No lubrication needed, if applied it shall be continuous
Max working pressure (bar)	10
Temperature °C	-5 ÷ +50
Flow rate at 6 bar with Δp=1 (Nl/min)	1600

Ⓜ	MECHANICAL CODE
	SEE VALVES SERIES 300 CNOMO

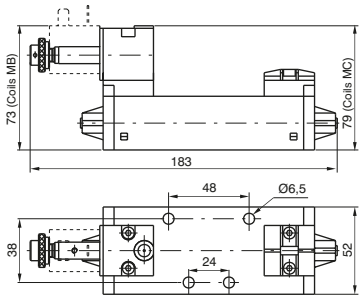

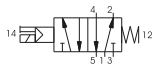

Weight 360 g
Minimum piloting pressure 2,5 bar

Solenoid-Differential

Coding: 1012.52.3.6.Ⓜ

Operational characteristics	
Fluid	Filtered air. No lubrication needed, if applied it shall be continuous
Max working pressure (bar)	10
Temperature °C	-5 ÷ +50
Flow rate at 6 bar with Δp=1 (Nl/min)	1600

Ⓜ	MECHANICAL CODE
	SEE VALVES SERIES 300 CNOMO

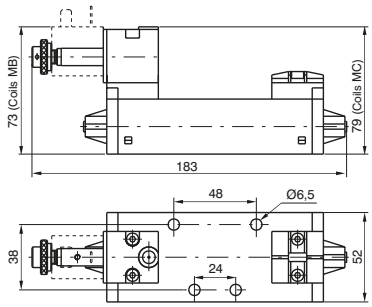

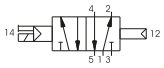

Weight 360 g
Minimum piloting pressure 2 bar

Solenoid-Differential

Coding: 1012.52.3.5.Ⓜ

Operational characteristics	
Fluid	Filtered air. No lubrication needed, if applied it shall be continuous
Max working pressure (bar)	10
Temperature °C	-5 ÷ +50
Flow rate at 6 bar with Δp=1 (Nl/min)	1600

Ⓜ	MECHANICAL CODE
	SEE VALVES SERIES 300 CNOMO

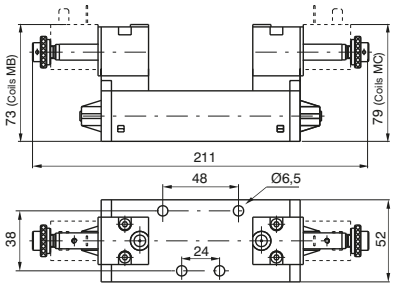

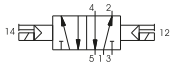

Weight 420 g
Minimum piloting pressure 1,5 bar

Solenoid-Solenoid 5/3

Coding: 1012.53.Ⓕ.3.5.Ⓜ

Operational characteristics	
Fluid	Filtered air. No lubrication needed, if applied it shall be continuous
Max working pressure (bar)	10
Temperature °C	-5 ÷ +50
Flow rate at 6 bar with Δp=1 (Nl/min)	1600

Ⓕ	FUNCTION
	31 = Closed centres
	32 = Open centres
	33 = Pressured centres
Ⓜ	MECHANICAL CODE
	SEE VALVES SERIES 300 CNOMO

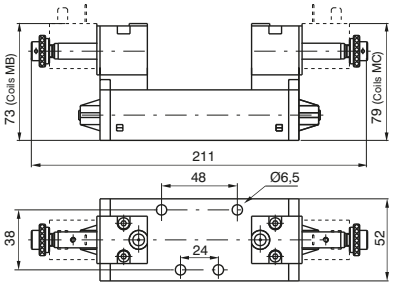

Weight 420 g
Minimum piloting pressure 3 bar

1012.53.Ⓕ.3.5.Ⓜ

Overall dimensions and technical information are provided solely for informative purposes and may be modified without notice

Pneumatic - Spring

Coding: 1013.52.1.9

Operational characteristics	
Fluid	Filtered air. No lubrication needed, if applied it shall be continuous
Max working pressure (bar)	10
Temperature °C	-5 ÷ +50
Flow rate at 6 bar with Δp=1 (Nl/min)	3600

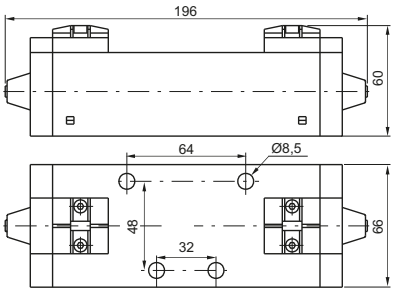

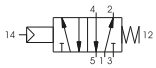

Weight 1000 g
Minimum piloting pressure 2,5 bar

Pneumatic - Differential

Coding: 1013.52.1.6

Operational characteristics	
Fluid	Filtered air. No lubrication needed, if applied it shall be continuous
Max working pressure (bar)	10
Temperature °C	-5 ÷ +50
Flow rate at 6 bar with Δp=1 (Nl/min)	3600

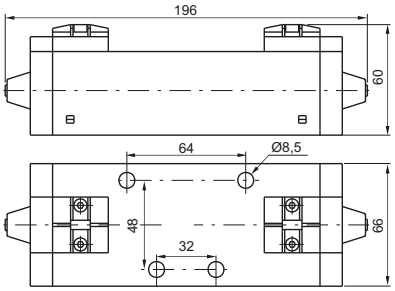

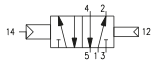

Weight 1020 g
Minimum piloting pressure 2 bar

Pneumatic-Pneumatic 5/2

Coding: 1013.52.1.8

Operational characteristics	
Fluid	Filtered air. No lubrication needed, if applied it shall be continuous
Max working pressure (bar)	10
Temperature °C	-5 ÷ +50
Flow rate at 6 bar with Δp=1 (Nl/min)	3600

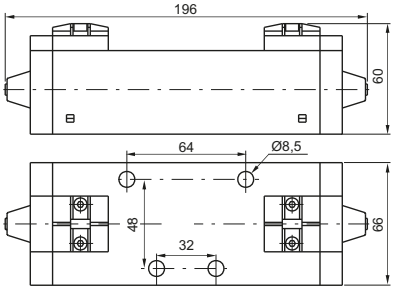

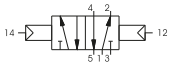

Weight 1050 g
Minimum piloting pressure 1,5 bar

Pneumatic-Pneumatic 5/3

Coding: 1013.53.Ⓕ.1.8

Operational characteristics	
Fluid	Filtered air. No lubrication needed, if applied it shall be continuous
Max working pressure (bar)	10
Temperature °C	-5 ÷ +50
Flow rate at 6 bar with Δp=1 (Nl/min)	3000

	FUNCTION
Ⓕ	**31** = Closed centres
	32 = Open centres
	33 = Pressured centres

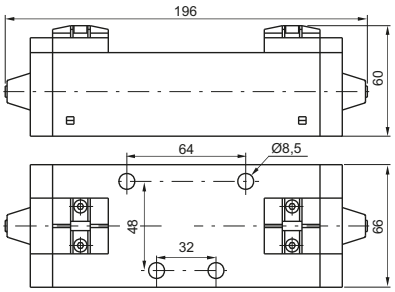

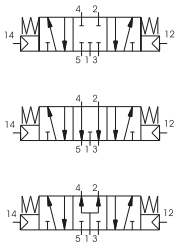

Weight 1050 g
Minimum piloting pressure 3 bar

1013.53.Ⓕ.1.8

Solenoid - Spring

Coding: 1013.52.3.9.Ⓜ

Operational characteristics	
Fluid	Filtered air. No lubrication needed, if applied it shall be continuous
Max working pressure (bar)	10
Temperature °C	-5 ÷ +50
Flow rate at 6 bar with Δp=1 (Nl/min)	3600

Ⓜ	MECHANICAL CODE
	SEE VALVES SERIES 300 CNOMO

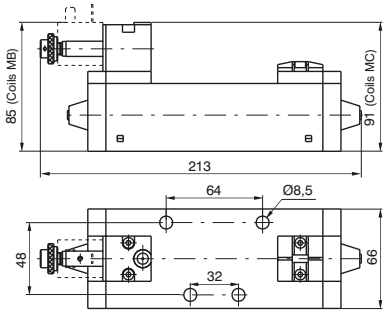

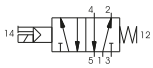

Weight 1060 g
Minimum piloting pressure 2,5 bar

Solenoid-Differential

Coding: 1013.52.3.6.Ⓜ

Operational characteristics	
Fluid	Filtered air. No lubrication needed, if applied it shall be continuous
Max working pressure (bar)	10
Temperature °C	-5 ÷ +50
Flow rate at 6 bar with Δp=1 (Nl/min)	3600

Ⓜ	MECHANICAL CODE
	SEE VALVES SERIES 300 CNOMO

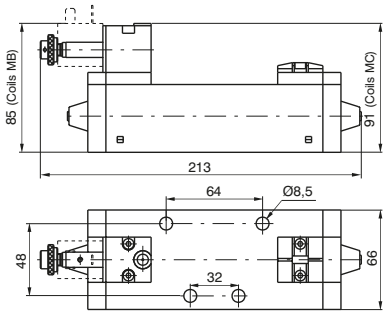

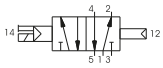

Weight 1080 g
Minimum piloting pressure 2 bar

Solenoid-Solenoid 5/2

Coding: 1013.52.3.5.Ⓜ

Operational characteristics	
Fluid	Filtered air. No lubrication needed, if applied it shall be continuous
Max working pressure (bar)	10
Temperature °C	-5 ÷ +50
Flow rate at 6 bar with Δp=1 (Nl/min)	3600

Ⓜ	MECHANICAL CODE
	SEE VALVES SERIES 300 CNOMO

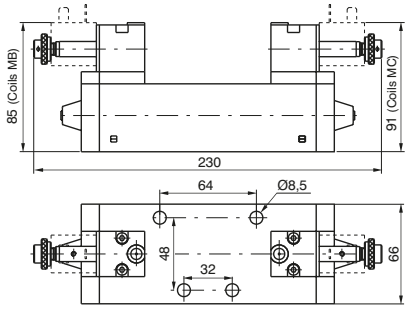

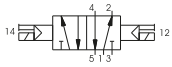

Weight 1170 g
Minimum piloting pressure 1,5 bar

Solenoid-Solenoid 5/3

Coding: 1013.53.Ⓕ.3.5.Ⓜ

Operational characteristics	
Fluid	Filtered air. No lubrication needed, if applied it shall be continuous
Max working pressure (bar)	10
Temperature °C	-5 ÷ +50
Flow rate at 6 bar with Δp=1 (Nl/min)	3000

Ⓕ	FUNCTION
	31 = Closed centres
	32 = Open centres
	33 = Pressured centres
Ⓜ	MECHANICAL CODE
	SEE VALVES SERIES 300 CNOMO

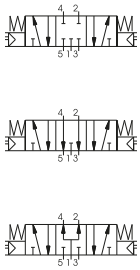

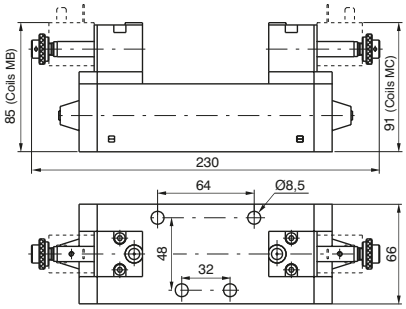

Weight 1170 g
Minimum piloting pressure 3 bar

1013.53.Ⓕ.3.5.Ⓜ

Overall dimensions and technical information are provided solely for informative purposes and may be modified without notice

Series 1100 - Modular bases with side and bottom connections

General

These bases are manufactured with the outlet and pilot ports on both the sides and the bottom faces giving the option for use with any application.
Unused ports must be blanked off using threaded plugs which are not included in the part number or price.
To isolate bases from each other for use with different supply pressures ports 1, 3 & 5 should be plugged underneath the seal.
The codes are:
1101.17 (size 1) - 1102.17 (size 2) - 1103.17 (size 3)

Modular bases

Coding: 110Ⓣ.00

Ⓣ	SIZE
	1 = Size 1
	2 = Size 2
	3 = Size 3

Weight 240 g

1101.00

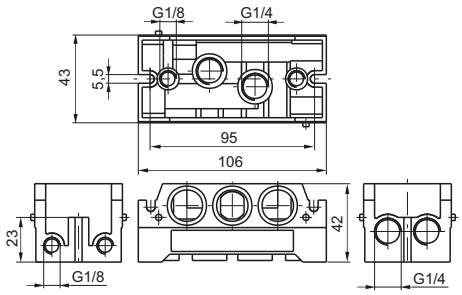

Weight 340 g

1102.00

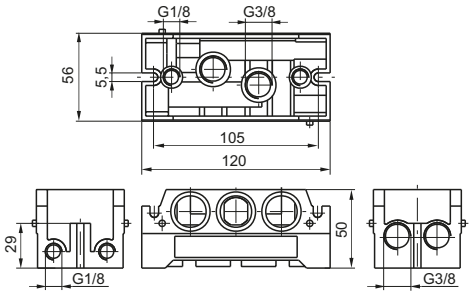

Weight 950 g

1103.00

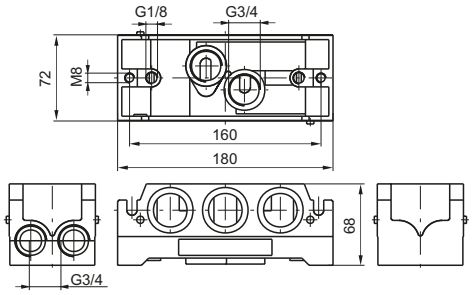

Inlet blocks, Size 1

Coding: 1101.09

Weight 100 g

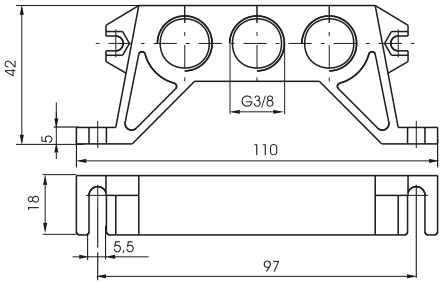

Inlet blocks, Size 3

Coding: 1103.11

Weight 840 g

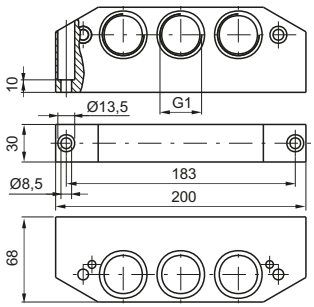

Overall dimensions and technical information are provided solely for informative purposes and may be modified without notice

Inlet blocks

Coding: 110Ⓣ.Ⓝ

Ⓣ	SIZE
	1 = Size 1
	2 = Size 2
Ⓝ	WORKING PORTS SIZE
	10 = Universal
	11 = In line
	12 = Top connections
	13 = Bottom connections

Weight 160 g

1101.Ⓝ

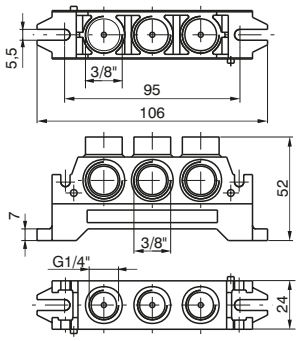

Weight 230 g

1102.Ⓝ

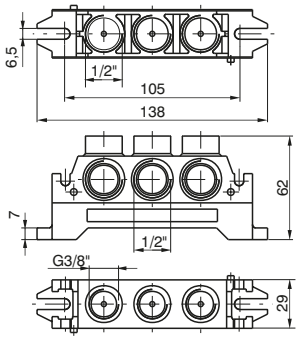

Single use bases

Coding: 110Ⓣ.Ⓕ

Ⓣ	SIZE
	1 = Size 1
	2 = Size 2
	3 = Size 3
Ⓕ	SHAPE
	14 = Shape A
	15 = Shape B (only for sizes 1 & 2)

Weight 160 g

1101.14

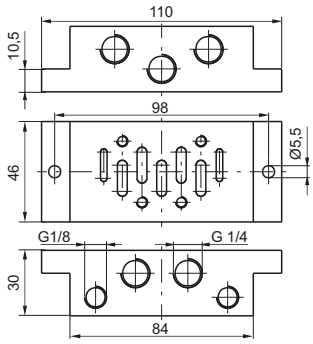

Weight 190 g

1101.15

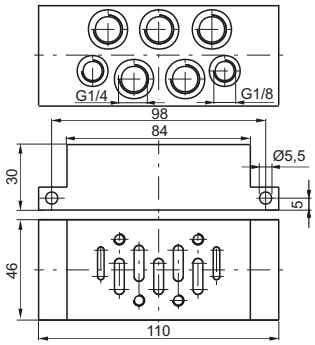

Weight 190 g

1102.14

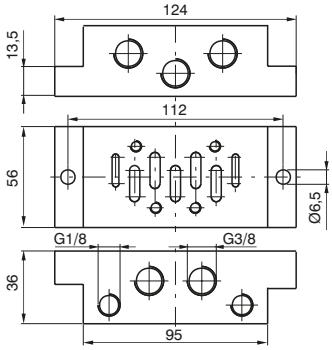

Weight 220 g

1102.15

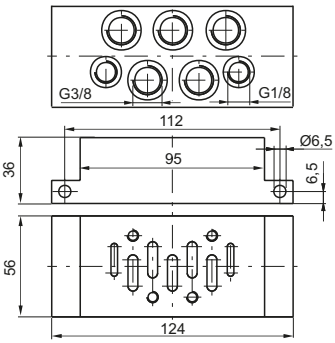

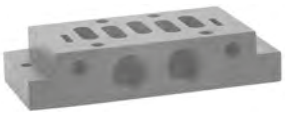

Weight 600 g

1103.14

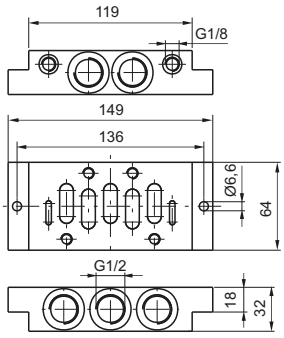

Overall dimensions and technical information are provided solely for informative purposes and may be modified without notice

Closing plate

Coding: 110Ⓣ.16

	SIZE
Ⓣ	1 = Size 1
	2 = Size 2
	3 = Size 3

1101.16

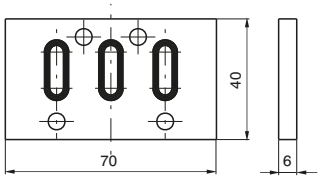

1102.16

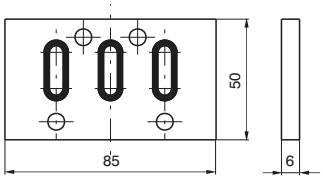

1103.16

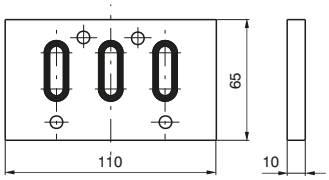

Base adaptor

Coding: 1100.Ⓣ

	SIZE
Ⓣ	2 = Sizes 2-1
	3 = Sizes 3-2

Weight 110 g

1100.2-1

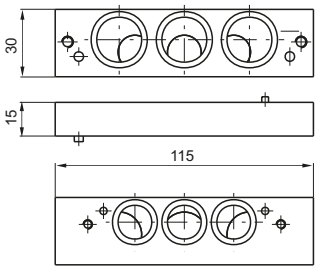

Weight 590 g

1100.3-2

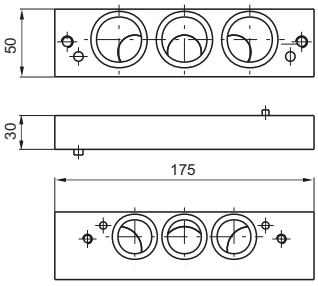

Series 1000 M12 - Size 1, 2 & 3

General

The ISO 5599/1 Solenoid valves Series 1000 M12 are available in three sizes with flow rates from 900 Nl/min for size 1 up to the 3600 Nl/min for size 3.
The standard features of the ISO valves are still included, however, they are now combined with a M12 electrical connector located in the middle of the valve to manage the electrical signals.
Versions are available to suit valves with both single and double 24VDC solenoids complete with IP65 protection.
All version are supplied with LED indicators
"Shifting time of pneumatic directional control valves or moving parts, logic devices were measured in accordance to ISO 12238:2001, Pneumatic fluid power-Directional control valves-Measurement of shifting time"

Electrical characteristics

Electrical connector M12x1
Protection degree IP65
Input voltage 24VDC
Nominal power 2,3W
LED indentification

Monostable version

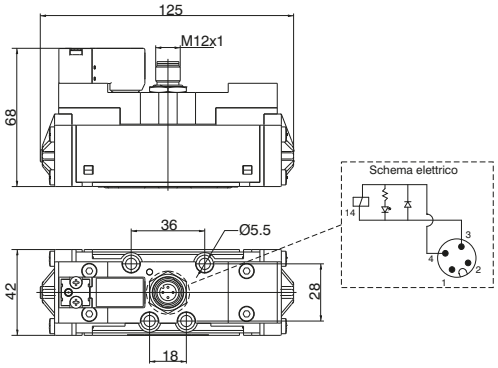

Bistable version

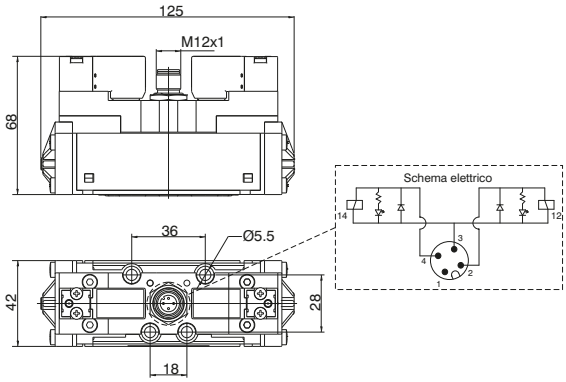

Overall dimensions and technical information are provided solely for informative purposes and may be modified without notice

Solenoid - Spring

Coding: 1111.52.3.9.Ⓣ

Operational characteristics	
Fluid	Filtered air. No lubrication needed, if applied it shall be continuous
Max working pressure (bar)	10
Minimum piloting pressure (bar)	2.5
Temperature °C	-5 ÷ +50
Flow rate at 6 bar with Δp=1 (Nl/min)	900
Responce time according to ISO 12238, activation time (ms)	16
Responce time according to ISO 12238, deactivation time (ms)	122

Shifting time of pneumatic directional control valves or moving parts, logic devices were measured in accordance to ISO 12238:2001

Ⓣ	COIL VOLTAGE
12P	= 24VDC

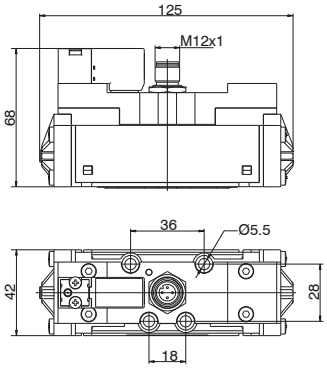

Weight 350 g

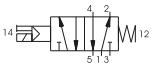

Solenoid-Differential

Coding: 1111.52.3.6.Ⓣ

Operational characteristics	
Fluid	Filtered air. No lubrication needed, if applied it shall be continuous
Max working pressure (bar)	10
Minimum piloting pressure (bar)	2
Temperature °C	-5 ÷ +50
Flow rate at 6 bar with Δp=1 (Nl/min)	900
Responce time according to ISO 12238, activation time (ms)	32
Responce time according to ISO 12238, deactivation time (ms)	51

Shifting time of pneumatic directional control valves or moving parts, logic devices were measured in accordance to ISO 12238:2001

Ⓣ	COIL VOLTAGE
12P	= 24VDC

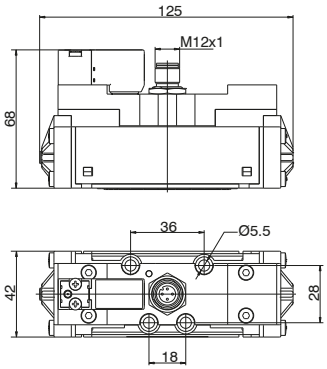

Weight 356 g

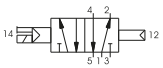

Solenoid-Solenoid 5/2

Coding: 1111.52.3.5.Ⓣ

Operational characteristics	
Fluid	Filtered air. No lubrication needed, if applied it shall be continuous
Max working pressure (bar)	10
Minimum piloting pressure (bar)	1.5
Temperature °C	-5 ÷ +50
Flow rate at 6 bar with Δp=1 (Nl/min)	900
Responce time according to ISO 12238, activation time (ms)	13
Responce time according to ISO 12238, deactivation time (ms)	14

Shifting time of pneumatic directional control valves or moving parts, logic devices were measured in accordance to ISO 12238:2001

Ⓣ	COIL VOLTAGE
12P	= 24VDC

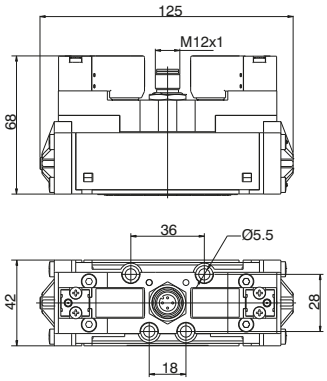

Weight 390 g

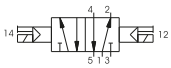

Solenoid-Solenoid 5/3

Coding: 1111.53.Ⓕ.3.5.Ⓣ

Operational characteristics	
Fluid	Filtered air. No lubrication needed, if applied it shall be continuous
Max working pressure (bar)	10
Minimum piloting pressure (bar)	3
Temperature °C	-5 ÷ +50
Flow rate at 6 bar with Δp=1 (Nl/min)	900
Responce time according to ISO 12238, activation time (ms)	18 (Closed centres) 18 (Open centres) 19 (Pressured centres)
Responce time according to ISO 12238, deactivation time (ms)	19 (Closed centres) 20 (Open centres) 18 (Pressured centres)

Shifting time of pneumatic directional control valves or moving parts, logic devices were measured in accordance to ISO 12238:2001

Ⓕ	FUNCTION
	31 = Closed centres
	32 = Open centres
	33 = Pressured centres
Ⓣ	COIL VOLTAGE
	12P = 24VDC

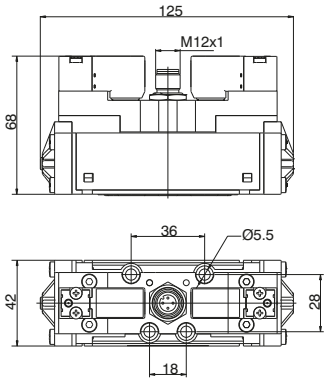

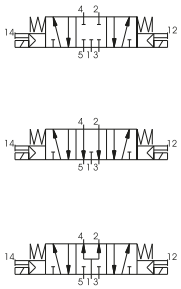

Weight 392 g

Overall dimensions and technical information are provided solely for informative purposes and may be modified without notice

Solenoid - Spring

Coding: 1112.52.3.9.T

Operational characteristics	
Fluid	Filtered air. No lubrication needed, if applied it shall be continuous
Max working pressure (bar)	10
Minimum piloting pressure (bar)	2.5
Temperature °C	-5 ÷ +50
Flow rate at 6 bar with Δp=1 (Nl/min)	1600
Responce time according to ISO 12238, activation time (ms)	24
Responce time according to ISO 12238, deactivation time (ms)	124

T	COIL VOLTAGE
12P	= 24VDC

Shifting time of pneumatic directional control valves or moving parts, logic devices were measured in accordance to ISO 12238:2001

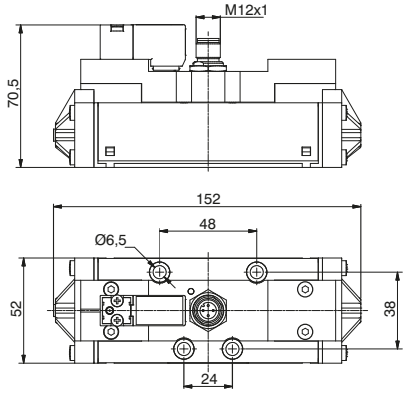

Weight 510 g

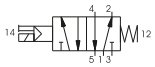

Solenoid-Differential

Coding: 1112.52.3.6.T

Operational characteristics	
Fluid	Filtered air. No lubrication needed, if applied it shall be continuous
Max working pressure (bar)	10
Minimum piloting pressure (bar)	2
Temperature °C	-5 ÷ +50
Flow rate at 6 bar with Δp=1 (Nl/min)	1600
Responce time according to ISO 12238, activation time (ms)	37
Responce time according to ISO 12238, deactivation time (ms)	90

T	COIL VOLTAGE
12P	= 24VDC

Shifting time of pneumatic directional control valves or moving parts, logic devices were measured in accordance to ISO 12238:2001

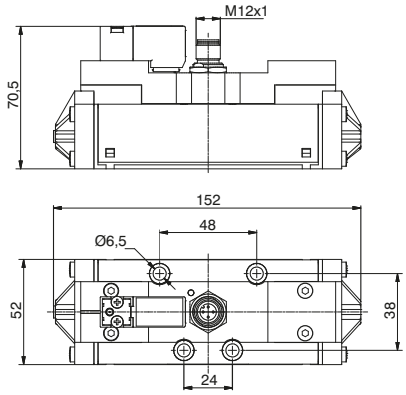

Weight 515 g

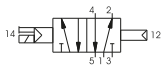

Solenoid-Solenoid 5/2

Coding: 1112.52.3.5.T

Operational characteristics	
Fluid	Filtered air. No lubrication needed, if applied it shall be continuous
Max working pressure (bar)	10
Minimum piloting pressure (bar)	1.5
Temperature °C	-5 ÷ +50
Flow rate at 6 bar with Δp=1 (Nl/min)	1600
Responce time according to ISO 12238, activation time (ms)	17
Responce time according to ISO 12238, deactivation time (ms)	20

T	COIL VOLTAGE
12P	= 24VDC

Shifting time of pneumatic directional control valves or moving parts, logic devices were measured in accordance to ISO 12238:2001

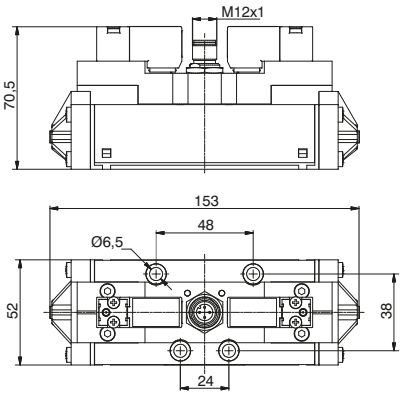

Weight 550 g

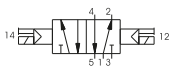

Solenoid-Solenoid 5/3

Coding: 1112.53.Ⓕ.3.5.Ⓣ

Operational characteristics	
Fluid	Filtered air. No lubrication needed, if applied it shall be continuous
Max working pressure (bar)	10
Minimum piloting pressure (bar)	3
Temperature °C	-5 ÷ +50
Flow rate at 6 bar with Δp=1 (Nl/min)	1600
Responce time according to ISO 12238, activation time (ms)	18 (Closed centres) 18 (Open centres) 20 (Pressured centres)
Responce time according to ISO 12238, deactivation time (ms)	112 (Closed centres) 106 (Open centres) 118 (Pressured centres)

Shifting time of pneumatic directional control valves or moving parts, logic devices were measured in accordance to ISO 12238:2001

Ⓕ	FUNCTION
	31 = Closed centres
	32 = Open centres
	33 = Pressured centres
Ⓣ	COIL VOLTAGE
	12P = 24VDC

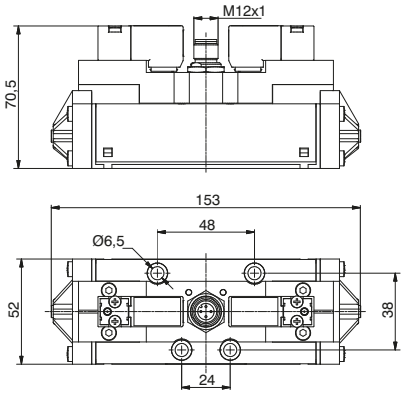

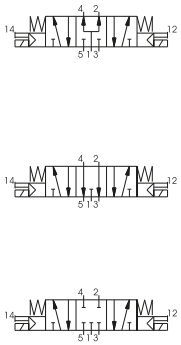

Weight 560 g

Overall dimensions and technical information are provided solely for informative purposes and may be modified without notice

Solenoid - Spring

Coding: 1113.52.3.9.Ⓣ

Operational characteristics	
Fluid	Filtered air. No lubrication needed, if applied it shall be continuous
Max working pressure (bar)	10
Minimum piloting pressure (bar)	2.5
Temperature °C	-5 ÷ +50
Flow rate at 6 bar with Δp=1 (Nl/min)	3600
Responce time according to ISO 12238, activation time (ms)	46
Responce time according to ISO 12238, deactivation time (ms)	254

Shifting time of pneumatic directional control valves or moving parts, logic devices were measured in accordance to ISO 12238:2001

Ⓣ	COIL VOLTAGE
	12P = 24VDC

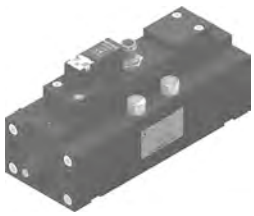

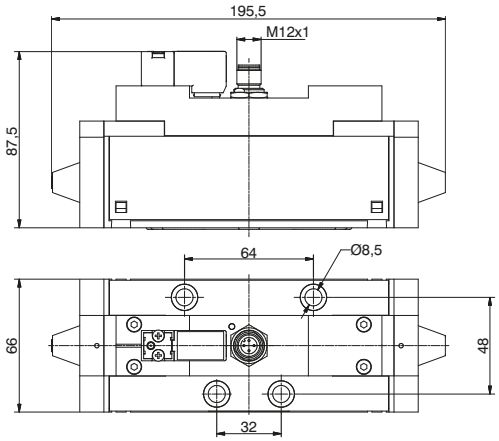

Weight 1360 g

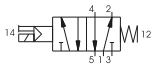

Solenoid-Differential

Coding: 1113.52.3.6.Ⓣ

Operational characteristics	
Fluid	Filtered air. No lubrication needed, if applied it shall be continuous
Max working pressure (bar)	10
Minimum piloting pressure (bar)	2
Temperature °C	-5 ÷ +50
Flow rate at 6 bar with Δp=1 (Nl/min)	3600
Responce time according to ISO 12238, activation time (ms)	78
Responce time according to ISO 12238, deactivation time (ms)	180

Shifting time of pneumatic directional control valves or moving parts, logic devices were measured in accordance to ISO 12238:2001

Ⓣ	COIL VOLTAGE
	12P = 24VDC

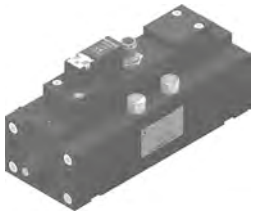

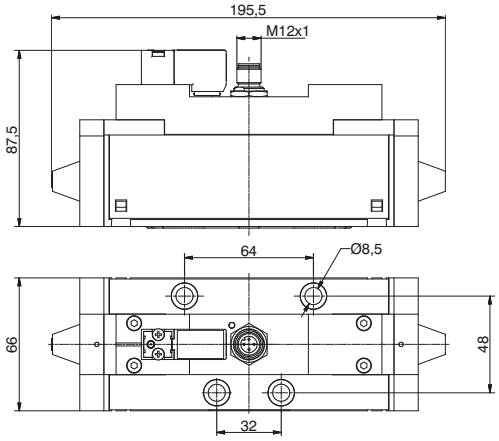

Weight 1360 g

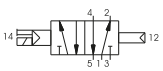

Solenoid-Solenoid 5/2

Coding: 1113.52.3.5.Ⓣ

Operational characteristics	
Fluid	Filtered air. No lubrication needed, if applied it shall be continuous
Max working pressure (bar)	10
Minimum piloting pressure (bar)	1.5
Temperature °C	-5 ÷ +50
Flow rate at 6 bar with Δp=1 (Nl/min)	3600
Responce time according to ISO 12238, activation time (ms)	32
Responce time according to ISO 12238, deactivation time (ms)	37

Shifting time of pneumatic directional control valves or moving parts, logic devices were measured in accordance to ISO 12238:2001

Ⓣ	COIL VOLTAGE
12P	= 24VDC

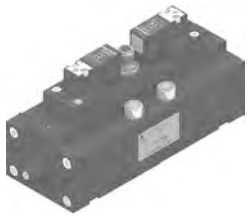

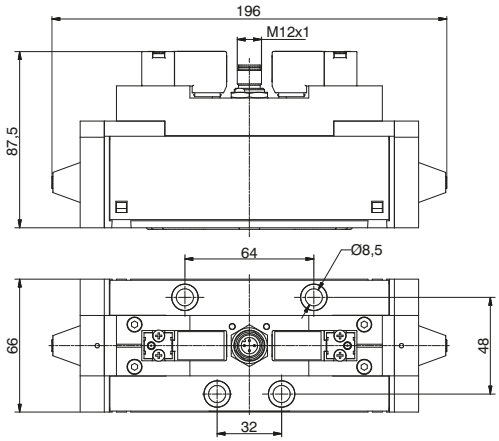

Weight 1370 g

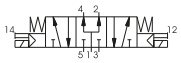

Solenoid-Solenoid 5/3

Coding: 1113.53.Ⓕ.3.5.Ⓣ

Operational characteristics	
Fluid	Filtered air. No lubrication needed, if applied it shall be continuous
Max working pressure (bar)	10
Minimum piloting pressure (bar)	3
Temperature °C	-5 ÷ +50
Flow rate at 6 bar with Δp=1 (Nl/min)	3600
Responce time according to ISO 12238, activation time (ms)	30 (Closed centres) 30 (Open centres) 32 (Pressured centres)
Responce time according to ISO 12238, deactivation time (ms)	305 (Closed centres) 230 (Open centres) 270 (Pressured centres)

Shifting time of pneumatic directional control valves or moving parts, logic devices were measured in accordance to ISO 12238:2001

Ⓣ	COIL VOLTAGE
12P	= 24VDC

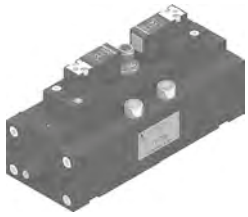

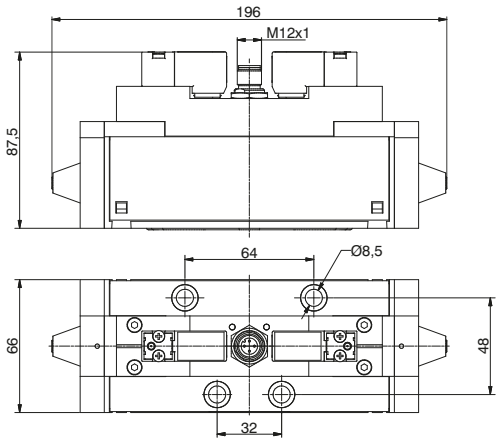

Weight 1380 g

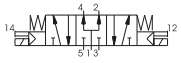

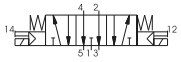

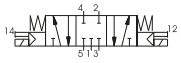

Overall dimensions and technical information are provided solely for informative purposes and may be modified without notice

Series 600 - M5 - G1"

General

These accessories are a range of devices for completing a pneumatic circuit. These valves, with their special functions, are inserted between two valves, between a valve and a cylinder, or following a cylinder.
One of the particular characteristic of these accessories is that they are automatically actuated without the need for external commands. Usually, operation and idle are controlled by the presence or absence of pressure as, for example, in the case of quick exhaust valves which pilots itself as a selector, changing the flow direction as the signal goes off and on.
On the other hand, other components are inert. That is, they do not have any internal variable function which is sensitive to pressure. Among these components are silencers, manifolds and flow regulators.
There are also the flow regulators, which like electronic components, can be defined as variable resistences. They are fundamental in regulating the flow rate, provide precise timings and regulate the cylinders' speed.
The selector valves, with "AND" and "OR" functions, are logic functions components which often are an essential element. Furthermore, they are built to allow high flow rate which cannot be obtained by classic pneumatic logic.
The block valves lock the cylinder in a position, avoiding unexpected depressurization of the cylinder's chamber due to lack of compressed air at the inlet port. Practically, it is a piloted unidirectional valve that blocks the exhaust port when there is no air in the pilot circuit.
Finally the economizer valves are in fact a pressure reducer valves installed between valve and cylinder for reducing the air consumption. For example this is applicable on the cylinder return stroke without penalizing the exhaust as happens with FRL pressure regulator.

Construction characteristics

We have not listed all different materials used for the construction of these components because the list would be too the long. We use corrosion proof material, brass or anodized aluminium and the most appropriate specific mixture for seals.
If more information is required please contact our technical department.

Use and maintenance

In operation pay attention to the minimum and maximum criteria for temperature and pressure, and ensure good quality compressed air. In a dirty environment, protect the exhaust ports.
In this case, maintenance is minimal and is necessary only if the air is particularly dirty.
The components most subject to damage by the accumulation of dirt are flow regulators with fine regulation and silencers. As for regulators, follow the normal procedure for disassembling, washing with non-chemical cleaning agents and remounting. The silencers need only to be rinsed in petrol or solvent and blown dry with compressed air.
The number of requests for spare seals for flow regulators and shuttle valves are statistically irrelevant. More often, it is necessary to replace the lining of the quick exhaust because of the wear it undergoes due to the particular conditions of operating.

ATTENTION: use hydraulic oil class H for lubrication such as MAGNA GC 32 (Castrol).

MIniature flow control valve M5 - Ø3 tube

Coding: 6.01.305.Ⓕ

Operational characteristics	
Fluid	Filtered air. No lubrication needed, if applied it shall be continuous
Max working pressure (bar)	10
Temperature °C	-5 ÷ +70
Orifice size (mm)	1.5

Ⓕ	FUNCTION
	1.2 = Unidirectional
	2.1 = Unidirectional
	1.1 = Bidirectional

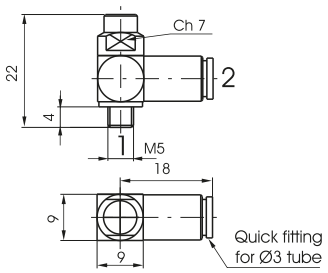

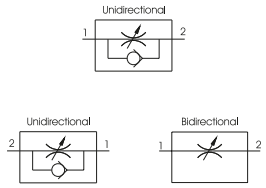

Weight 14 g

MIniature flow control valve M5 - Ø3 tube, with adjustement knob

Coding: 6.01.305.ⒻP

Operational characteristics	
Fluid	Filtered air. No lubrication needed, if applied it shall be continuous
Max working pressure (bar)	10
Temperature °C	-5 ÷ +70
Orifice size (mm)	1.5

Ⓕ	FUNCTION
	1.2 = Unidirectional
	2.1 = Unidirectional
	1.1 = Bidirectional

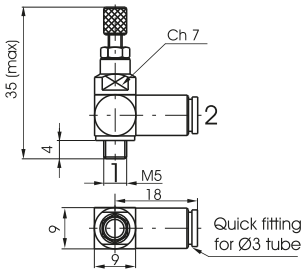

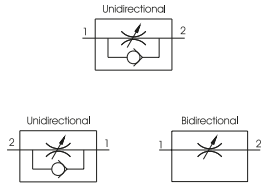

Weight 16 g

MIniature flow control valve M5 - Ø3,17 tube

Coding: 6.01.315.Ⓕ

Operational characteristics	
Fluid	Filtered air. No lubrication needed, if applied it shall be continuous
Max working pressure (bar)	10
Temperature °C	-5 ÷ +70
Orifice size (mm)	1.5

Ⓕ	FUNCTION
	1.2 = Unidirectional
	2.1 = Unidirectional
	1.1 = Bidirectional

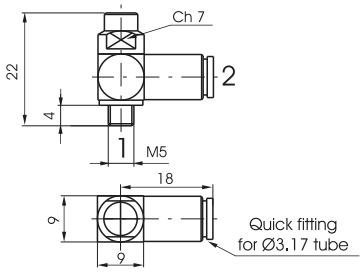

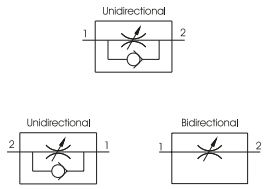

Weight 14 g

MIniature flow control valve M5 - Ø3,17 tube, with adjustement knob

Coding: 6.01.315.ⒻP

Operational characteristics	
Fluid	Filtered air. No lubrication needed, if applied it shall be continuous
Max working pressure (bar)	10
Temperature °C	-5 ÷ +70
Orifice size (mm)	1.5

Ⓕ	FUNCTION
	1.2 = Unidirectional
	2.1 = Unidirectional
	1.1 = Bidirectional

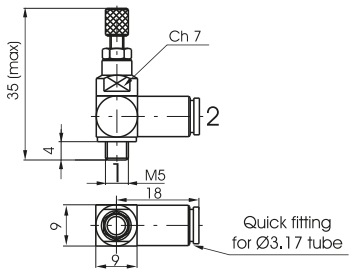

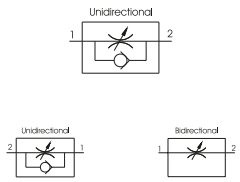

Weight 16 g

Overall dimensions and technical information are provided solely for informative purposes and may be modified without notice

MIniature flow control valve M5 - Ø4 tube

Coding: 6.01.45.Ⓕ

Operational characteristics	
Fluid	Filtered air. No lubrication needed, if applied it shall be continuous
Max working pressure (bar)	10
Temperature °C	-5 ÷ +70
Orifice size (mm)	1.5

Ⓕ	FUNCTION
	1.2 = Unidirectional
	2.1 = Unidirectional
	1.1 = Bidirectional

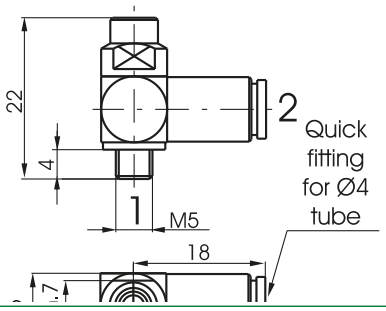

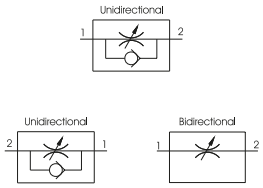

Weight 14 g

MIniature flow control valve M5 - Ø4 tube, with adjustement knob

Coding: 6.01.45.ⒻP

Operational characteristics	
Fluid	Filtered air. No lubrication needed, if applied it shall be continuous
Max working pressure (bar)	10
Temperature °C	-5 ÷ +70
Orifice size (mm)	1.5

Ⓕ	FUNCTION
	1.2 = Unidirectional
	2.1 = Unidirectional
	1.1 = Bidirectional

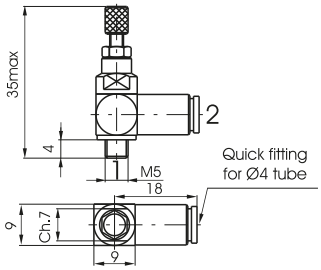

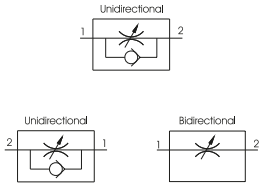

Weight 16 g

Flow control valve M5 - in line ports

Coding: 6.01.Ⓕ

Operational characteristics	
Fluid	Filtered air. No lubrication needed, if applied it shall be continuous
Max working pressure (bar)	10
Temperature °C	-5 ÷ +70
Orifice size (mm)	2

Ⓕ	FUNCTION
	05 = Unidirectional
	05/2 = Bidirectional

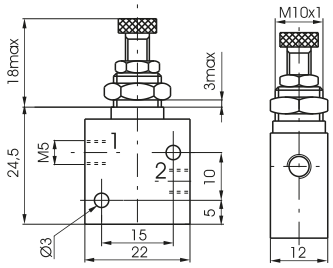

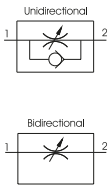

Weight 48 g

Flow control valve M5 - port at 90°

Coding: 6.01.05.Ⓕ

Operational characteristics	
Fluid	Filtered air. No lubrication needed, if applied it shall be continuous
Max working pressure (bar)	10
Temperature °C	-5 ÷ +70
Orifice size (mm)	2

Ⓕ	FUNCTION
	90 = Unidirectional
	90/2 = Bidirectional

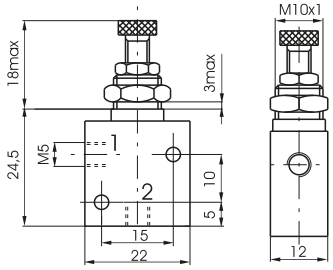

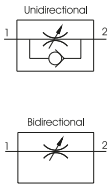

Weight 48 g

Flow control valve M5 - with a through bolt

Coding: 6.01.05.Ⓕ

Operational characteristics	
Fluid	Filtered air. No lubrication needed, if applied it shall be continuous
Max working pressure (bar)	10
Temperature °C	-5 ÷ +70
Orifice size (mm)	2

Ⓕ	FUNCTION	
	180 =	Unidirectional
	180/2 =	Bidirectional

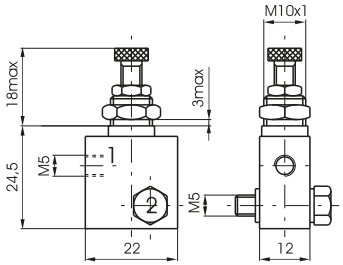

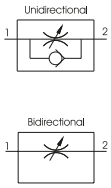

Weight 52 g

Flow control valve G1/8" - ultrasensitive

Coding: 6.01.18/Ⓕ

Operational characteristics	
Fluid	Filtered air. No lubrication needed, if applied it shall be continuous
Max working pressure (bar)	10
Temperature °C	-5 ÷ +70
Orifice size (mm)	3

Ⓕ	FUNCTION
	4 = Unidirectional
	5 = Bidirectional

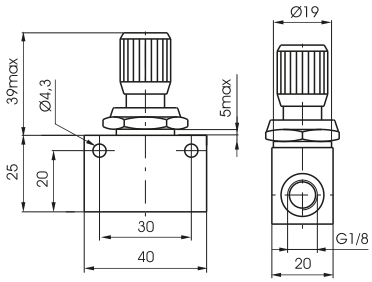

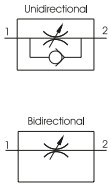

Weight 100 g

Flow control valve G1/8" - ultrasensitive with lock nut

Coding: 6.01.18/Ⓕ

Operational characteristics	
Fluid	Filtered air. No lubrication needed, if applied it shall be continuous
Max working pressure (bar)	10
Temperature °C	-5 ÷ +70
Orifice size (mm)	3

Ⓕ	FUNCTION
	6 = Unidirectional
	7 = Bidirectional

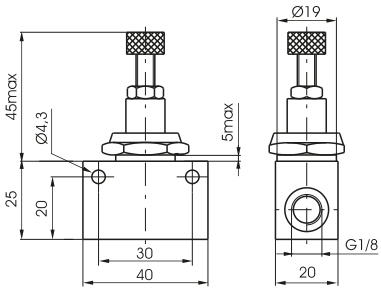

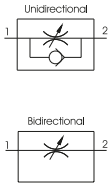

Weight 105 g

Flow control valve G1/8"

Coding: 6.01.Ⓕ

Operational characteristics	
Fluid	Filtered air. No lubrication needed, if applied it shall be continuous
Max working pressure (bar)	10
Temperature °C	-5 ÷ +70
Orifice size (mm)	4

Ⓕ	FUNCTION	
	18N =	Unidirectional
	18NE =	Bidirectional
	18/1N	= Unidirectional economic version
	18/1NE	= Bidirectional economic version

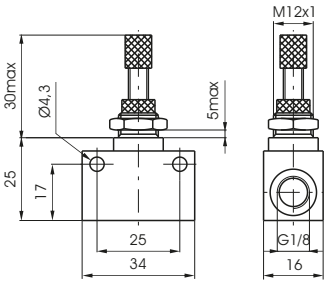

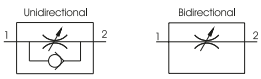

Weight 50 g

Overall dimensions and technical information are provided solely for informative purposes and may be modified without notice

Flow control valve G1/4" - compact type - unidirectional

Coding: 6.01.14/1

Operational characteristics	
Fluid	Filtered air. No lubrication needed, if applied it shall be continuous
Max working pressure (bar)	10
Temperature °C	-5 ÷ +70
Orifice size (mm)	5.5

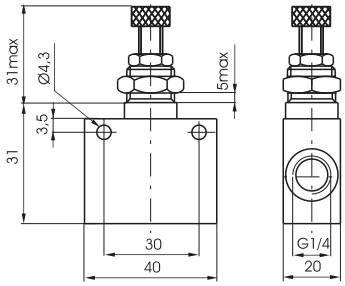

Weight 100 g

Flow control valve G1/4"

Coding: 6.01.Ⓕ

Operational characteristics	
Fluid	Filtered air. No lubrication needed, if applied it shall be continuous
Max working pressure (bar)	10
Temperature °C	-5 ÷ +70
Orifice size (mm)	7

Ⓕ	FUNCTION	
	14N =	Unidirectional
	14/1N =	Bidirectional

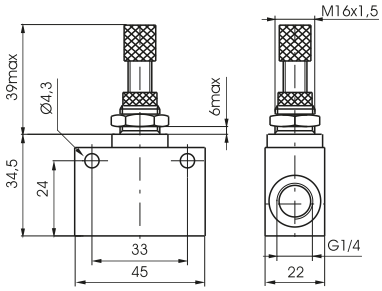

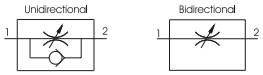

Weight 105 g

Flow control valve G1/2"

Coding: 6.01.Ⓕ

Operational characteristics	
Fluid	Filtered air. No lubrication needed, if applied it shall be continuous
Max working pressure (bar)	10
Temperature °C	-5 ÷ +70
Orifice size (mm)	12

Ⓕ	FUNCTION	
	12N =	Unidirectional
	12/1N =	Bidirectional

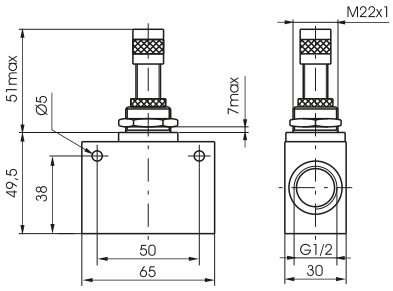

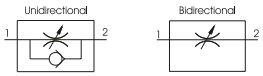

Weight 290 g

Flow control valve G3/4" - unidirectional

Coding: 6.01.34

Operational characteristics	
Fluid	Filtered air. No lubrication needed, if applied it shall be continuous
Max working pressure (bar)	10
Temperature °C	-5 ÷ +70
Orifice size (mm)	12

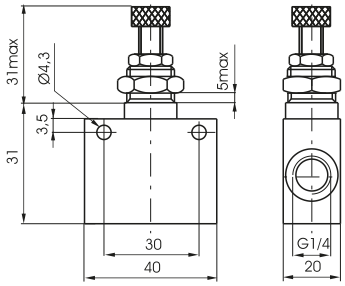

Weight 500 g

Quick exhaust valve

Coding: 6.02.❶

Operational characteristics	
Fluid	Filtered air. No lubrication needed, if applied it shall be continuous
Max working pressure (bar)	0.5÷10
Temperature °C	-5 ÷ +70

	CONNECTION (IN)
❶	**05** = M5
	18 = G1/8"
	14 = G1/4"
	12 = G1/2"

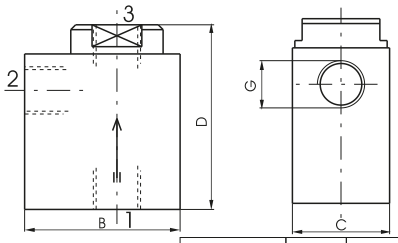

G	M5	1/8"	1/4"	1/2"
B	22	32	35	52
C	12	20	25	37
D	28	38	50	62
Weight g	50	62	112	310
Flow rate Nl/min at 6 bar with Δ p = 1 from 1 to 2	120	480	960	3300
Flow rate Nl/min at 6 bar on free exhaust from 2 to 3	220	1100	1930	6500

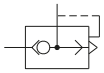

Weight "see table"

Quick exhaust in line valve

Coding: 6.02.❶.Ⓒ.L

Operational characteristics	
Fluid	Filtered air. No lubrication needed, if applied it shall be continuous
Max working pressure (bar)	10
Temperature °C	-5 ÷ +70

	CONNECTION (IN)
❶	**M5** = M5
	03 = tube Ø3
	04 = tube Ø4
	06 = tube Ø6
Ⓒ	WORKING PORTS SIZE
	M5 = M5
	M7 = M7
	18 = G1/8"
	04 = tube Ø4
	06 = tube Ø6

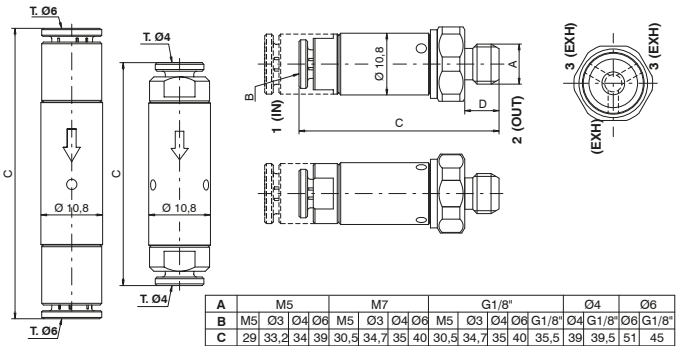

A	M5				M7				G1/8"					Ø4		Ø6	
B	M5	Ø3	Ø4	Ø6	M5	Ø3	Ø4	Ø6	M5	Ø3	Ø4	Ø6	G1/8"	Ø4	G1/8"	Ø6	G1/8"
C	29	33,2	34	39	30,5	34,7	35	40	30,5	34,7	35	40	35,5	39	39,5	51	45
D	4,5				6									-	5,5	-	5,5
Weight (g)	17								18					17		20	18
Flow rate Nl/min at 6 bar with Δp=1 (from 1 to 2)	90				110									90		110	
Flow rate Nl/min at 6 bar on free exhaust (from 2 to 3)	240				350									240		350	

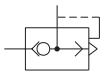

Weight "see table"

Exhaust flow control

Coding: 6.03.❶

Operational characteristics	
Fluid	Filtered air. No lubrication needed, if applied it shall be continuous
Max working pressure (bar)	10
Temperature °C	-5 ÷ +70

	CONNECTION (IN)
❶	**05** = M5
	18 = G1/8"
	14 = G1/4"
	12 = G1/2"

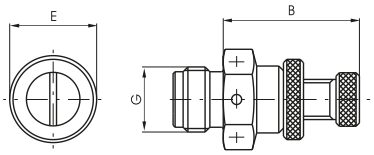

G	M5	1/8"	1/4"	1/2"
B	21	18	22	39
E	9	13	16	25
Weight g	10	18	32	155

Weight "see table"

Overall dimensions and technical information are provided solely for informative purposes and may be modified without notice

Shuttle valve "OR"

Coding: 6.04.❶

Operational characteristics	
Fluid	Filtered air. No lubrication needed, if applied it shall be continuous
Max working pressure (bar)	10
Temperature °C	-5 ÷ +70

❶	CONNECTION (IN)
	05 = M5
	18 = G1/8"
	14 = G1/4"

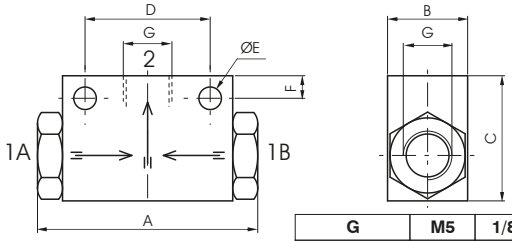

G	M5	1/8"	1/4"
A	27	44	62
B	12	16	22
C	17	25	30
D	15	25	35
E	3,5	4,5	5,5
F	3,5	4,5	5,5
Weight g	33	50	110
Flow rate at 6 bar with Δp = 1 Nl/min.	110	700	2200

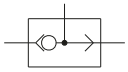

Weight "see table"

Shuttle valve "OR" - T=4

Coding: 6.04.04

Operational characteristics	
Fluid	Filtered air. No lubrication needed, if applied it shall be continuous
Max working pressure (bar)	10
Temperature °C	-5 ÷ +70
Flow rate at 6 bar with Δp=1 (Nl/min)	105
Orifice size (mm)	2.5
Working ports size	Fitting T=4

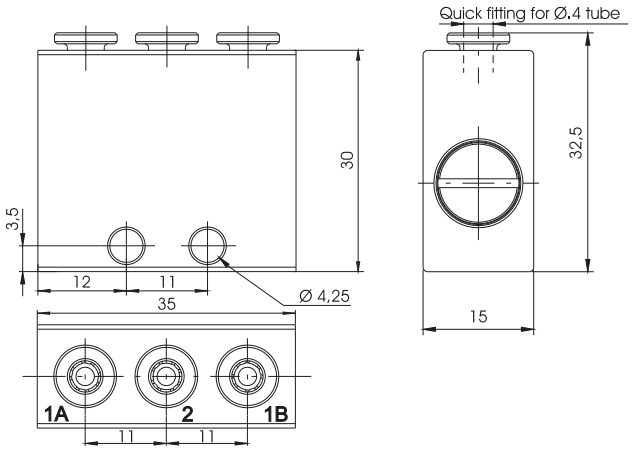

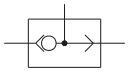

Weight 50 g

Shuttle valve "AND"-M5-G1/8"

Coding: 6.04.❶/1

Operational characteristics	
Fluid	Filtered air. No lubrication needed, if applied it shall be continuous
Max working pressure (bar)	10
Temperature °C	-5 ÷ +70

❶	CONNECTION (IN)
	05 = M5
	18 = G1/8"

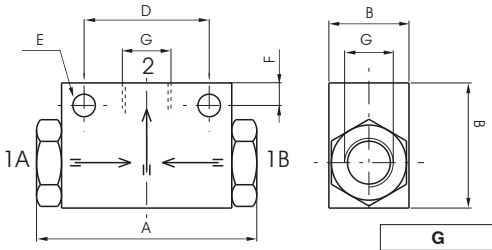

G	M5	1/8"
A	36	44
B	12	16
C	22	45
D	20	25
E	3,2	4,5
F	3,5	4,5
Weight g	30	50
Flow rate at 6 bar with Δp = 1 Nl/min.	100	480

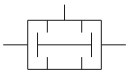

Weight "see table"

Shuttle valve "AND" - T=4

Coding: 6.04.04/1

Operational characteristics	
Fluid	Filtered air. No lubrication needed, if applied it shall be continuous
Max working pressure (bar)	10
Temperature °C	-5 ÷ +70
Flow rate at 6 bar with Δp=1 (Nl/min)	105
Orifice size (mm)	2.5
Working ports size	Fitting T=4

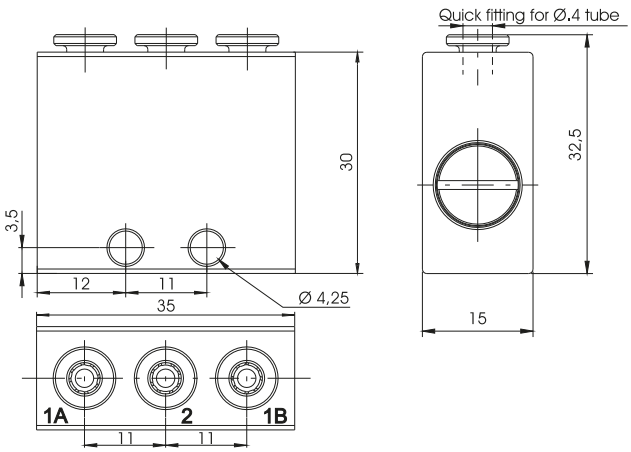

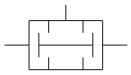

Weight 50 g

Silencers steel wool

Coding: 6.05.❶

Operational characteristics	
Fluid	Filtered air. No lubrication needed, if applied it shall be continuous
Max working pressure (bar)	10
Temperature °C	-5 ÷ +70

❶	CONNECTION (IN)
	18 = G1/8"
	14 = G1/4"
	38 = G3/8"
	12 = G1/2"

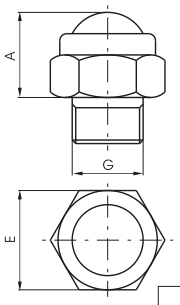

G	1/8"	1/4"	3/8"	1/2"
A	12	13	15	17
E	14	17	22	27
Weight g	8	16	32	44

Weight "see table"

Silencers brass

Coding: 6.06.❶

Operational characteristics	
Fluid	Filtered air. No lubrication needed, if applied it shall be continuous
Max working pressure (bar)	10
Temperature °C	-5 ÷ +70

❶	CONNECTION (IN)
	05 = M5
	18 = G1/8"
	14 = G1/4"
	38 = G3/8"
	12 = G1/2"
	34 = G3/4"
	01 = G1"

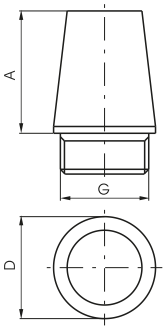

G	M5	1/8"	1/4"	3/8"	1/2"	3/4"	1"
A	17	15	18	28	32	40	50
D	8	12	15	19	23	29	38
Weight g	4	8	15	35	50	92	182

Weight "see table"

Overall dimensions and technical information are provided solely for informative purposes and may be modified without notice

G 1/8" compact check valves

Coding: 6.07.18.Ⓖ

Operational characteristics	
Fluid	Filtered air. No lubrication needed, if applied it shall be continuous
Max working pressure (bar)	2,5 ÷ 10
Temperature °C	-5 ÷ +70
Flow rate at 6 bar with Δp=1 (Nl/min)	100

	SEALS
Ⓖ	**R** = NBR
	VR = FPM

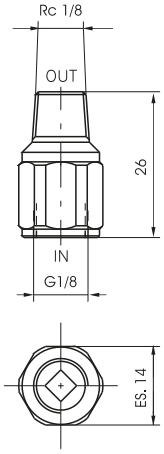

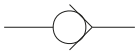

Weight 50 g

Non return valve

Coding: 6.07.Ⓣ

Operational characteristics	
Fluid	Filtered air. No lubrication needed, if applied it shall be continuous
Max working pressure (bar)	10
Temperature °C	-5 ÷ +70 (+150°C FPM)

	SEALS
Ⓣ	**05** = NBR-M5
	18 = NBR-G1/8"
	14 = NBR-G1/4"
	38 = NBR-G3/8"
	12 = NBR-G1/2"
	18V = FPM-G1/8"
	14V = FPM-G1/4"
	38V = FPM-G3/8"
	12V = in FPM-G1/2"

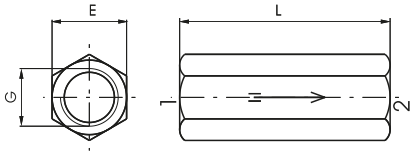

	G	M5	1/8"	1/4"	3/8"	1/2"
	E	10	14	17	21	25
	L	21	37	48	50	60
	Weight g	14	35	60	85	136
Flow rate at 6 bar with Δp = 1	Nl/min.	160	650	1150	2600	3500

Weight "see table"

Manifold 4 ports

Coding: 6.08.Ⓒ/4

Operational characteristics	
Fluid	Filtered air. No lubrication needed, if applied it shall be continuous
Max working pressure (bar)	20
Temperature °C	-5 ÷ +70

	WORKING PORTS SIZE
Ⓒ	**05** = M5
	18 = G1/8"
	14 = G1/4"
	38 = G3/8"
	12 = G1/2"

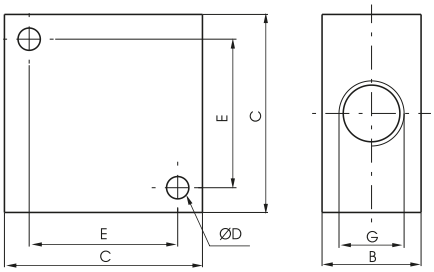

G	M5	1/8"	1/4"	3/8"	1/2"
B	10	16	20	20	30
C	20	32	40	40	50
D	3,3	4,5	4,5	5,5	6,5
E	14	22	30	30	38
Weight g	28	38	68	54	135

Weight "see table"

Manifold 10 ports

Coding: 6.08.Ⓒ/8

Operational characteristics	
Fluid	Filtered air. No lubrication needed, if applied it shall be continuous
Max working pressure (bar)	20
Temperature °C	-5 ÷ +70

Ⓒ	WORKING PORTS SIZE
	05 = M5
	18 = G1/8"
	14 = G1/4"
	38 = G3/8"
	12 = G1/2"

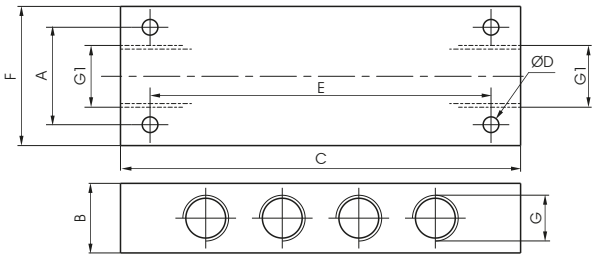

G	M5	1/8"	1/4"	3/8"	1/2"
G1	G1/8"	1/8"	1/4"	3/8"	1/2"
A	16	20	28	28	36
B	12	18	20	20	30
C	60	90	115	130	170
ØD	3,3	4,5	4,5	5,5	5,5
E	50	75	98	112	150
F	22	32	40	40	50
Weight g	92	110	185	165	460

Weight "see table"

Block valve G1/4"

Coding: 6.09.14.Ⓕ

Operational characteristics	
Fluid	Filtered air. No lubrication needed, if applied it shall be continuous
Max working pressure (bar)	10
Maximum piloting pressure (bar)	4
Temperature °C	-5 ÷ +70
Flow rate at 6 bar with Δp=1 (Nl/min)	700
Orifice size (mm)	7

Ⓕ	FUNCTION	
	UN =	Unidirectional
	BN =	Bidirectional

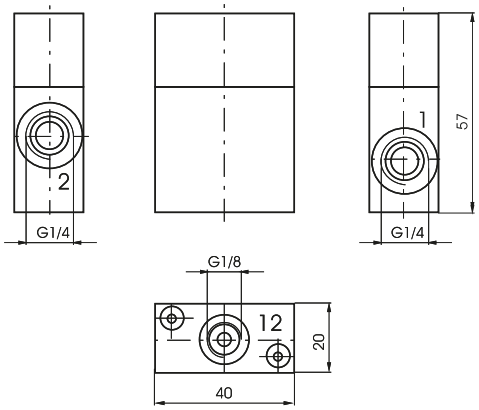

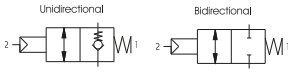

Weight 122 g

Block valve G1/2"

Coding: 6.09.12.Ⓕ

Operational characteristics	
Fluid	Filtered air. No lubrication needed, if applied it shall be continuous
Max working pressure (bar)	10
Maximum piloting pressure (bar)	4
Temperature °C	-5 ÷ +70
Flow rate at 6 bar with Δp=1 (Nl/min)	2000
Orifice size (mm)	12

Ⓕ	FUNCTION	
	UN =	Unidirectional
	BN =	Bidirectional

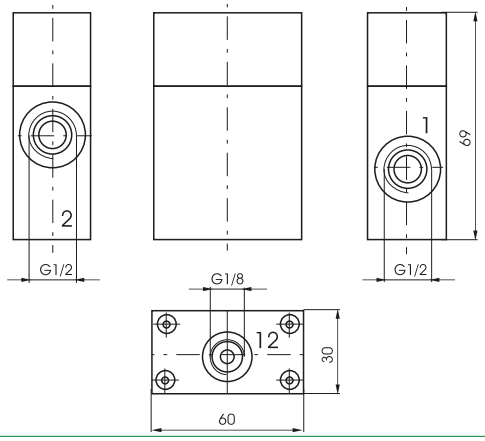

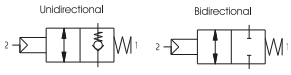

Weight 305 g

Overall dimensions and technical information are provided solely for informative purposes and may be modified without notice

Economizer

Coding: 6.11.Ⓒ

Operational characteristics	
Fluid	Filtered air. No lubrication needed, if applied it shall be continuous
Max working pressure (bar)	10
Pressure range (bar)	0 ÷ 5,5
Temperature °C	-5 ÷ +70
Flow rate at 6 bar with Δp=1 (Nl/min)	860
Orifice size (mm)	6

	WORKING PORTS SIZE
Ⓒ	**18** = G1/8"
	14 = G1/4"

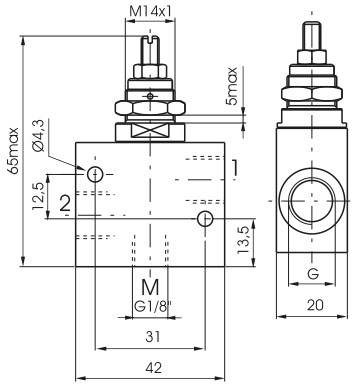

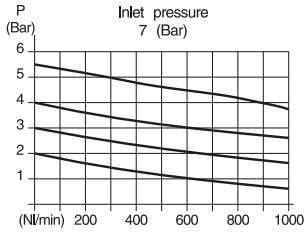

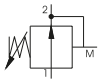

Weight 85 g

Gang mounting manifold for valves and solenoid valves G1/8"

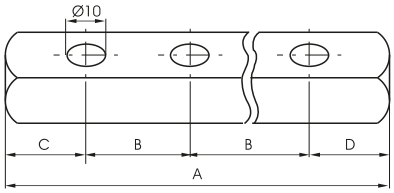

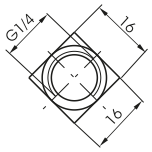

Coding: 6.10.18.Ⓢ/Ⓟ

Ⓢ	VALVE SIZE
	18 = 18 mm
	25 = 25 mm
	26 = 26 mm
	30 = 30 mm
	32 = 32 mm
	35 = 35 mm
Ⓟ	N. POSITIONS
	2 = N. 2 positions
	3 = N. 3 positions
	4 = N. 4 positions
	5 = N. 5 positions
	6 = N. 6 positions
	7 = N. 7 positions
	8 = N. 8 positions
	9 = N. 9 positions
	10 = N. 10 positions

6.10.18.18/Ⓟ
Weight "see table"

	N. OF POSITIONS								
	2	**3**	**4**	**5**	**6**	**7**	**8**	**9**	**10**
A	58	76	94	112	130	148	166	184	202
B	18	18	18	18	18	18	18	18	18
C	20	20	20	20	20	20	20	20	20
D	20	20	20	20	20	20	20	20	20
Weight g	55	80	105	130	155	180	205	230	255

6.10.18.25/Ⓟ
Weight "see table"

	N. OF POSITIONS								
	2	**3**	**4**	**5**	**6**	**7**	**8**	**9**	**10**
A	70	95	120	145	170	195	220	245	270
B	25	25	25	25	25	25	25	25	25
C	20	20	20	20	20	20	20	20	20
D	25	25	25	25	25	25	25	25	25
Weight g	80	115	150	185	220	255	290	325	360

6.10.18.26/Ⓟ
Weight "see table"

	N. OF POSITIONS								
	2	**3**	**4**	**5**	**6**	**7**	**8**	**9**	**10**
A	66	92	118	144	170	196	222	248	274
B	26	26	26	26	26	26	26	26	26
C	20	20	20	20	20	20	20	20	20
D	20	20	20	20	20	20	20	20	20
Weight g	70	110	145	185	220	260	300	340	375

6.10.18.30/Ⓟ
Weight "see table"

	N. OF POSITIONS								
	2	**3**	**4**	**5**	**6**	**7**	**8**	**9**	**10**
A	80	110	140	170	200	230	260	290	320
B	30	30	30	30	30	30	30	30	30
C	25	25	25	25	25	25	25	25	25
D	25	25	25	25	25	25	25	25	25
Weight g	100	140	180	220	260	300	340	380	420

6.10.18.32/Ⓟ
Weight "see table"

	N. OF POSITIONS								
	2	**3**	**4**	**5**	**6**	**7**	**8**	**9**	**10**
A	82	114	146	178	210	242	274	306	338
B	32	32	32	32	32	32	32	32	32
C	25	25	25	25	25	25	25	25	25
D	25	25	25	25	25	25	25	25	25
Weight g	100	145	190	235	280	325	370	415	460

6.10.18.35/Ⓟ
Weight "see table"

	N. OF POSITIONS								
	2	**3**	**4**	**5**	**6**	**7**	**8**	**9**	**10**
A	89	124	159	194	229	264	299	334	369
B	35	35	35	35	35	35	35	35	35
C	27	27	27	27	27	27	27	27	27
D	27	27	27	27	27	27	27	27	27
Weight g	110	160	210	260	310	360	410	460	510

Overall dimensions and technical information are provided solely for informative purposes and may be modified without notice

Gang mounting manifold for valves and solenoid valves G1/4"

Coding: 6.10.14.Ⓢ/Ⓟ

Ⓢ	VALVE SIZE
	20 = 20 mm
	25 = 25 mm
	30 = 30 mm
	35 = 35 mm
	45 = 45 mm
Ⓟ	N. POSITIONS
	2 = N. 2 positions
	3 = N. 3 positions
	4 = N. 4 positions
	5 = N. 5 positions
	6 = N. 6 positions
	7 = N. 7 positions
	8 = N. 8 positions
	9 = N. 9 positions
	10 = N. 10 positions

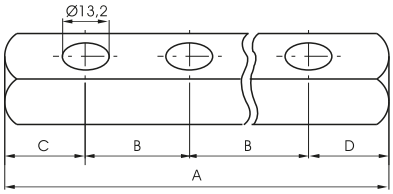

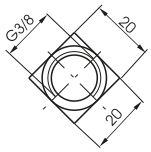

6.10.14.20/Ⓟ
Weight "see table"

	N. OF POSITIONS								
	2	**3**	**4**	**5**	**6**	**7**	**8**	**9**	**10**
A	65	85	105	125	145	165	185	205	225
B	20	20	20	20	20	20	20	20	20
C	22,5	22,5	22,5	22,5	22,5	22,5	22,5	22,5	22,5
D	22,5	22,5	22,5	22,5	22,5	22,5	22,5	22,5	22,5
Weight g	130	150	190	190	210	230	250	270	290

6.10.14.25/Ⓟ
Weight "see table"

	N. OF POSITIONS								
	2	**3**	**4**	**5**	**6**	**7**	**8**	**9**	**10**
A	75	100	125	150	175	200	225	250	275
B	25	25	25	25	25	25	25	25	25
C	25	25	25	25	25	25	25	25	25
D	25	25	25	25	25	25	25	25	25
Weight g	140	170	200	230	260	290	320	350	380

6.10.14.30/Ⓟ
Weight "see table"

	N. OF POSITIONS								
	2	**3**	**4**	**5**	**6**	**7**	**8**	**9**	**10**
A	80	110	140	170	200	230	260	290	320
B	30	30	30	30	30	30	30	30	30
C	25	25	25	25	25	25	25	25	25
D	25	25	25	25	25	25	25	25	25
Weight g	150	190	230	270	310	350	390	430	470

6.10.14.35/Ⓟ
Weight "see table"

	N. OF POSITIONS								
	2	**3**	**4**	**5**	**6**	**7**	**8**	**9**	**10**
A	85	120	155	190	225	260	295	335	365
B	35	35	35	35	35	35	35	35	35
C	30	30	30	30	30	30	30	30	30
D	20	20	20	20	20	20	20	20	20
Weight g	160	210	260	310	360	410	460	510	560

6.10.14.45/Ⓟ
Weight "see table"

	N. OF POSITIONS								
	2	**3**	**4**	**5**	**6**	**7**	**8**	**9**	**10**
A	115	160	205	250	295	340	385	430	475
B	45	45	45	45	45	45	45	45	45
C	35	35	35	35	35	35	35	35	35
D	35	35	35	35	35	35	35	35	35
Weight g	200	275	350	425	500	575	650	725	800

Overall dimensions and technical information are provided solely for informative purposes and may be modified without notice

Spry valves

Coding: 6.13.00

Construction characteristics

- This valve, is based on the Venturi principle, and it is used to spray and nebulize a liquid.
- Useful in all applications where is needed a continuous lubrication and / or refrigeration.
- Incoming air (connection 1) sucks the liquid through the venturi principle (connection 3) to obtain a continuous spray output (connection 2).

Technical characteristics	
Fluid	Filtered air. No lubrication needed, if applied it shall be continuous
Liquid	Water and oil (Liquid viscosity 3°E-5°E)
Working pressure (bar)	3 ÷ 10
Temperature °C	-5 ÷ +70
Weight (g)	85

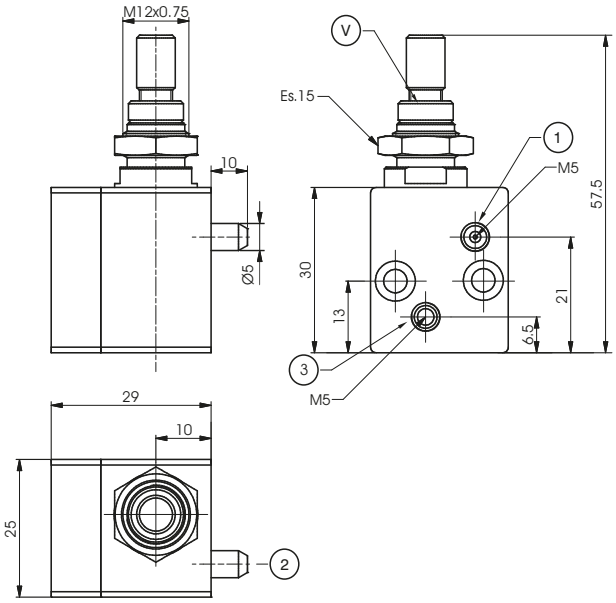

Liquid consumption diagram

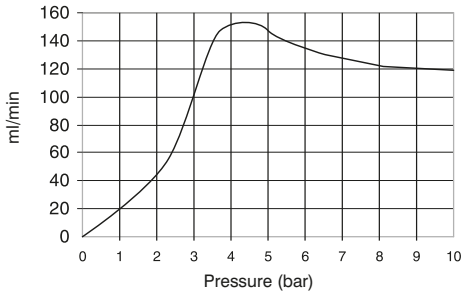

Volume of aspirated fluid in function of pressure power with the adjuster screw "V" totally open

Vacuum diagram

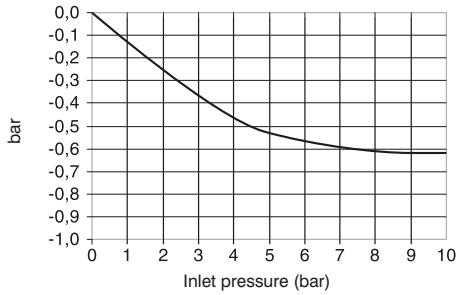

Volume of vacuum generated in function of supply pressure

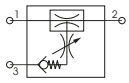

Supply air : Connection 1
Output (air and nebulized liquid) : Connection 2
Supply liquid : Connection 3

Overall dimensions and technical information are provided solely for informative purposes and may be modified without notice

Series 900

General

The 900 series consist of the following components:

- Pressure switch, which transforms a pneumatic signal into an electric one.
- Impulse generator, which transforms a permanent pneumatic signal into an adjustable impulse from 0 to 10 seconds.
- Pneumatic timer (N.C. or N.O.), which cuts or releases a pneumatic signal within an adjustable time.
- Two hands safety valve, which allows a safety use of two hands pneumatic controls (for example two push-button 3/2 N.C. to a certain distance) excluding false signals in case of push-button or valve malfunction.
- Flip - Flop: 5/2 ways valve, single signal actuated, commutes the outlet from 2 to 4 and vice versa at each puls.
- For a correct functioning it's important that inlet pressure be the same or lower than pilot pressure.
- Oscillator valve, 5/2 - G 1/8" with two logic functions "NOT" mounted on board, switches when the pressure in the connected cylinder exhaust chamber is reaching the threshold of "NOT".
- Signal amplifier, 3/2 - G 1/8" N.C. valve actuated by weak signals but higher than 0.05 bar.
- Progressive start-up valve, which is a device that is fitted in between valve or solenoid valve and cylinder allows a gradual filling of the chamber providing a low power cylinder movement. The progressive start-up valve is made of a flow control valve and a 2/2 N.C. valve with 6 mm nominal orifice. The valve is totally open when the pressure in the cylinder reaches 50% of inlet pressure.
- High-low pressure devices, located in the pneumatic circuit between valve and cylinder, allow the function of the cylinder with two different pressures. Example: in case of a locking action, it is possible to approach the required position at a low pressure, then increase to its maximum value in the circuit with the use of an electric signal. They are practically made of a piloted pressure regulator without relieving.

Construction characteristics

We use corrosion proof material, brass or anodized aluminium and the most appropriate specific mixture for seals. If more information is required please contact our technical departement.

Use and maintenance

In use pay attention to the minimum and maximum criteria for temperature and pressure, checking and ensure good quality compressed air. In a dirty environment, protect the exhaust ports. In this case, maintenance is minimal and is necessary only if the air is particularly dirty. This simple operation it should be carried out by a competent person.

ATTENTION: use hydraulic oil class H for lubrication such as MAGNA GC 32 (Castrol).

Pressure switch G 1/8" - screw connections

Coding: 900.18.1-Ⓟ

Operational characteristics	
Fluid	Filtered air. No lubrication needed, if applied it shall be continuous
Max working pressure (bar)	10
Temperature °C	-5 ÷ +70
Flow rate microswitch	13 (3) A to 220V~
Pilot ports size	G1/8"

Ⓟ	PRESSURE
	1 = Min. switch pressure 1 bar
	4 = Min. switch pressure 4 bar

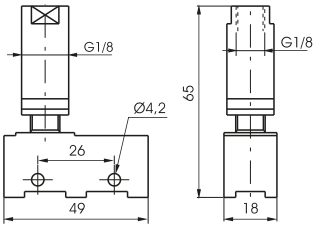

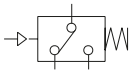

Weight 75 g

Pressure switch G 1/8" - spade connections

Coding: 900.18.1/Ⓟ

Operational characteristics	
Fluid	Filtered air. No lubrication needed, if applied it shall be continuous
Max working pressure (bar)	10
Temperature °C	-5 ÷ +70
Flow rate microswitch	16 (5) A to 220V~
Pilot ports size	G1/8"

Ⓟ	PRESSURE
	1 = Min. switch pressure 1 bar
	4 = Min. switch pressure 4 bar

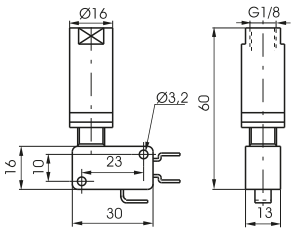

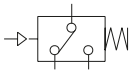

Weight 60 g

Switch protection

Coding: 900.18.0

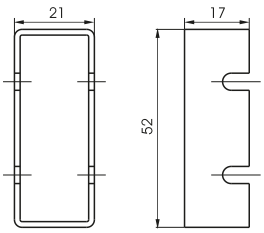

Weight 6 g

Impulse generator

Coding: 900.18.2N

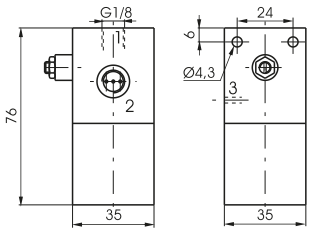

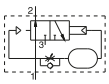

Weight 325 g

Overall dimensions and technical information are provided solely for informative purposes and may be modified without notice

Pneumatic timer N.C. - G 1/8"

Coding: 900.18.Ⓣ

Operational characteristics	
Fluid	Filtered air. No lubrication needed, if applied it shall be continuous
Max working pressure (bar)	3 ÷ 10
Temperature °C	-5 ÷ +70
Flow rate at 6 bar with Δp=1 (Nl/min)	130
Orifice size (mm)	2.5

	TIME
Ⓣ	**3** = 0 ÷ 30 sec.
	3-60 = 0 ÷ 60 sec.

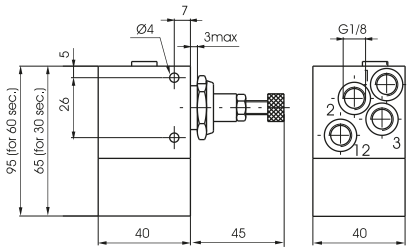

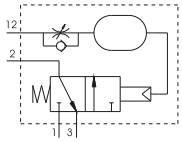

Weight 290 (30 sec.) g
weight 350 g (60 sec.)

Pneumatic timer N.O. - G 1/8"

Coding: 900.18.Ⓣ

Operational characteristics	
Fluid	Filtered air. No lubrication needed, if applied it shall be continuous
Max working pressure (bar)	4 ÷ 10
Temperature °C	-5 ÷ +70
Flow rate at 6 bar with Δp=1 (Nl/min)	130
Orifice size (mm)	2.5

	TIME
Ⓣ	**4** = 0 ÷ 30 sec.
	4-60 = 0 ÷ 60 sec.

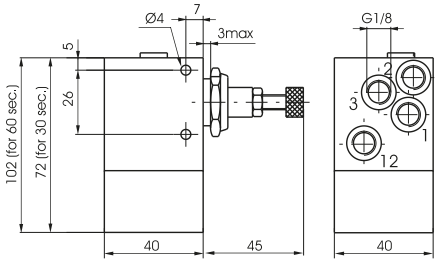

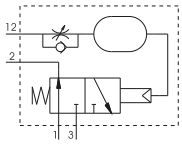

Weight 320 (30 sec.) g
weight 380 g (60 sec.)

Two hands safety valve G 1/4"

Coding: 900.52.1.1

Operational characteristics	
Fluid	Filtered air. No lubrication needed, if applied it shall be continuous
Max working pressure (bar)	10
Temperature °C	-5 ÷ +70
Flow rate at 6 bar with Δp=1 (Nl/min)	1030
Orifice size (mm)	7
Working ports size	G1/4"
Pilot ports size	G1/8"

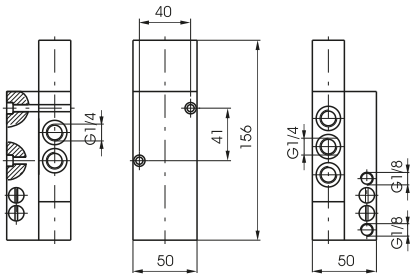

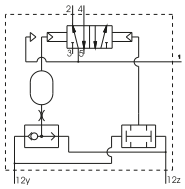

Weight 780 g

Two hands safety valve III A class certification (according to EN 574 standard)

Coding: 900.18.9

Operational characteristics	
Fluid	Filtered air. No lubrication needed, if applied it shall be continuous
Max working pressure (bar)	3 ÷ 8
Temperature °C	-5 ÷ +70
Flow rate at 6 bar with Δp=1 (Nl/min)	40
Orifice size (mm)	2.5
Working ports size	G1/8"
Pilot ports size	G1/8"

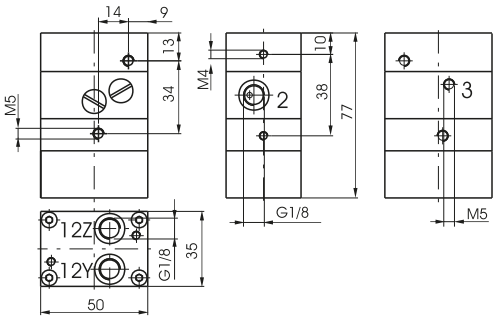

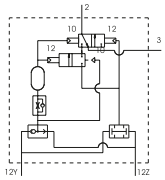

Weight 340 g

Two hands safety valve III B class certification (according to EN 574 standard)

Coding: 900.18.10

Operational characteristics	
Fluid	Filtered air. No lubrication needed, if applied it shall be continuous
Max working pressure (bar)	3 ÷ 8
Temperature °C	-5 ÷ +70
Flow rate at 6 bar with Δp=1 (Nl/min)	40
Orifice size (mm)	2.5
Working ports size	G1/8"
Pilot ports size	G1/8"

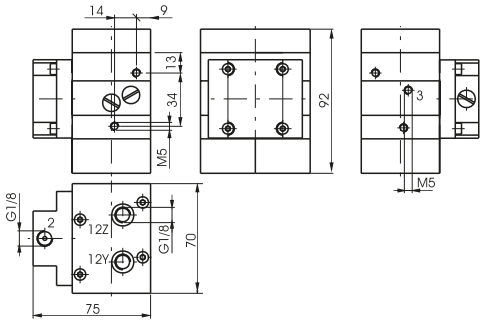

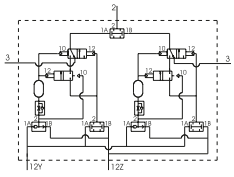

Weight 980 g

Power valve adaptor (Series 2400)

Coding: 900.18.11

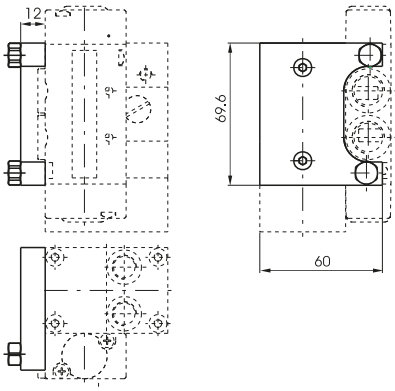

Weight 75 g

Overall dimensions and technical information are provided solely for informative purposes and may be modified without notice

Flip-flop valve G 1/8" - Pneumatic command

Coding: 900.52.1.3

Operational characteristics	
Fluid	Filtered air. No lubrication needed, if applied it shall be continuous
Max working pressure (bar)	10
Temperature °C	-5 ÷ +70
Flow rate at 6 bar with Δp=1 (Nl/min)	540
Orifice size (mm)	6
Working ports size	G1/8"

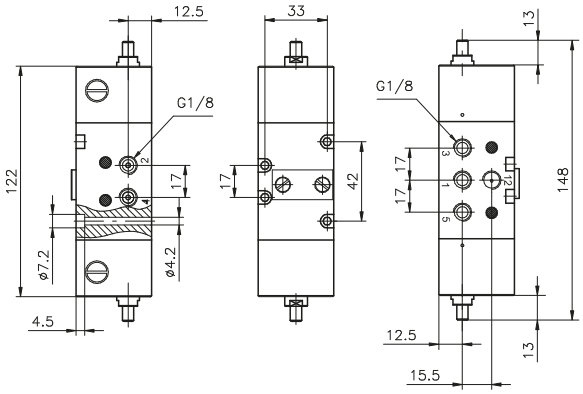

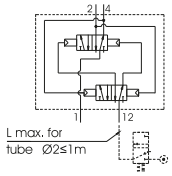

Weight 550 g

Attention : Pressure of signal "12" must be the same or higher than device inlet pressure. The maximum distance between the pilot valve and the device must not exceed 1Mtr. (see pneumatic scheme). Should be necessary to work at a greater distance it is advisable to use a pneumatic-spring shut-off valve positioned at the recommended distance.

Flip-flop valve - Electric command with M2 mechanic

Coding: 900.52.1.4

Operational characteristics	
Fluid	Filtered air. No lubrication needed, if applied it shall be continuous
Max working pressure (bar)	10
Temperature °C	-5 ÷ +70
Flow rate at 6 bar with Δp=1 (Nl/min)	540
Orifice size (mm)	6
Working ports size	G1/8"

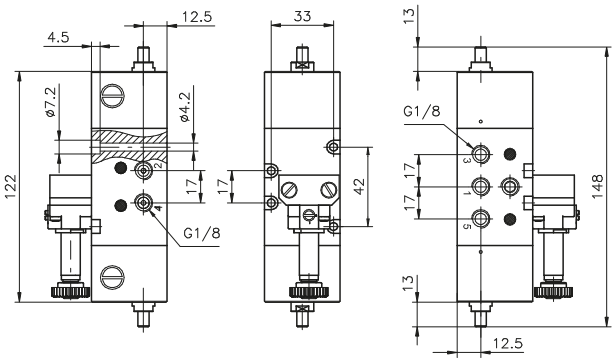

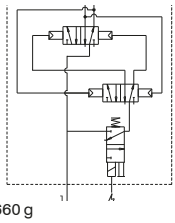

Weight 660 g

Flip-flop valve - Electric command with M3P CNOMO

Coding: 900.52.1.5

Operational characteristics	
Fluid	Filtered air. No lubrication needed, if applied it shall be continuous
Max working pressure (bar)	10
Temperature °C	-5 ÷ +70
Flow rate at 6 bar with Δp=1 (Nl/min)	540
Orifice size (mm)	6
Working ports size	G1/8"

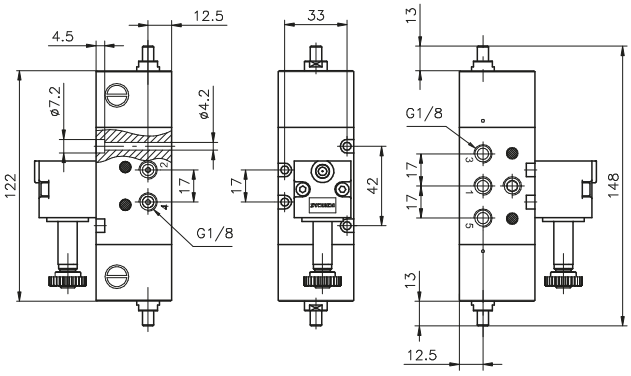

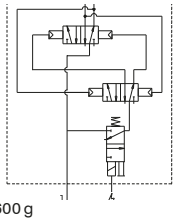

Weight 600 g

Oscillator valve G 1/8"

Coding: 900.52.Ⓕ

Operational characteristics	
Fluid	Filtered air. No lubrication needed, if applied it shall be continuous
Max working pressure (bar)	8
Min working pressure	2
Temperature °C	-5 ÷ +70
Flow rate at 6 bar with Δp=1 (Nl/min)	540
Orifice size (mm)	6
Working ports size	G1/8"

	FUNCTION
Ⓕ	**5** = without logic functions NOT
	5C = with logic functions NOT

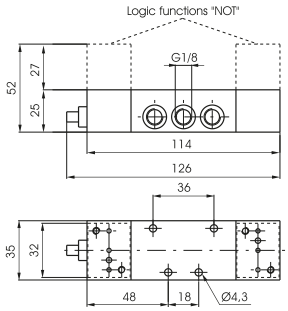

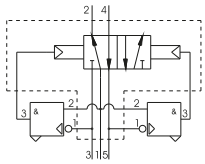

Weight 600 g

Signal amplifier G 1/8"

Coding: 900.32.6

Operational characteristics	
Fluid	Filtered air. No lubrication needed, if applied it shall be continuous
Max working pressure (bar)	10
Min working pressure	0.05
Temperature °C	-5 ÷ +70
Flow rate at 6 bar with Δp=1 (Nl/min)	130
Orifice size (mm)	3
Working ports size	G1/8"

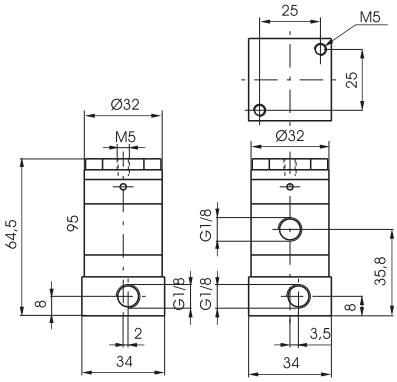

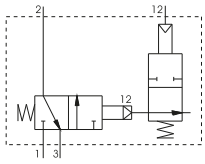

Weight 170 g

Progressive start-up valve G 1/4"

Coding: 900.14.7

Operational characteristics	
Fluid	Filtered air. No lubrication needed, if applied it shall be continuous
Max working pressure (bar)	2,5 ÷ 10
Temperature °C	-5 ÷ +70
Flow rate from 1 to 2 (Nl/min)	760
Flow rate from 2 to 1 (Nl/min)	900
Orifice size (mm)	6

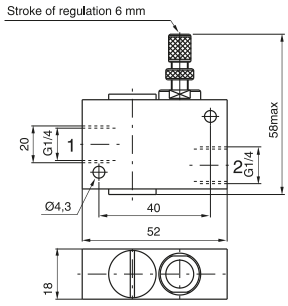

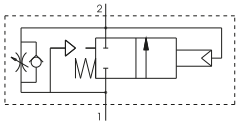

Weight 100 g
Flow rate needle fully open from port 1 to 2 (Nl/min.) = 200

Overall dimensions and technical information are provided solely for informative purposes and may be modified without notice

High-low pressure device

Coding: 900.18.8.P

Operational characteristics	
Fluid	Filtered air. No lubrication needed, if applied it shall be continuous
Max working pressure (bar)	10
Pressure range (bar)	1 ÷ 4
Temperature °C	-5 ÷ +50
Flow rate at 6 bar with Δp=1 (Nl/min)	650
Working ports size	G1/8"

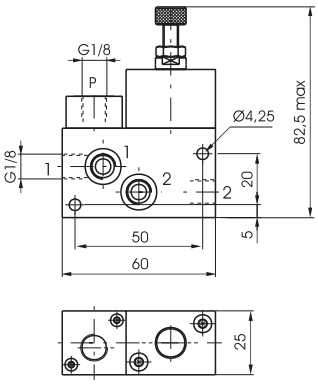

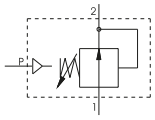

Weight 240 g
with pneumatic pilot

High-low pressure device

Coding: 900.18.8.E

Operational characteristics	
Fluid	Filtered air. No lubrication needed, if applied it shall be continuous
Max working pressure (bar)	10
Pressure range (bar)	1 ÷ 4
Temperature °C	-5 ÷ +50
Flow rate at 6 bar with Δp=1 (Nl/min)	650
Working ports size	G1/8"

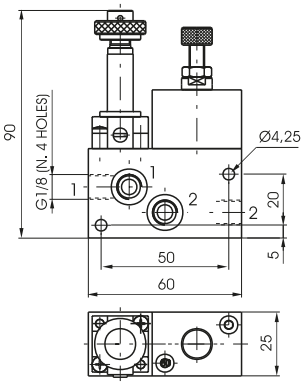

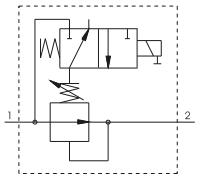

Weight 280 g
with M2 mechanic

External feeding base "NOT" logical element

Coding: 900.005

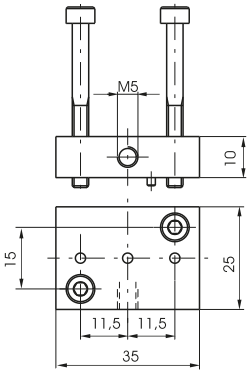

Weight 35 g

Pneumatic glue injector

Coding: 900.19.01

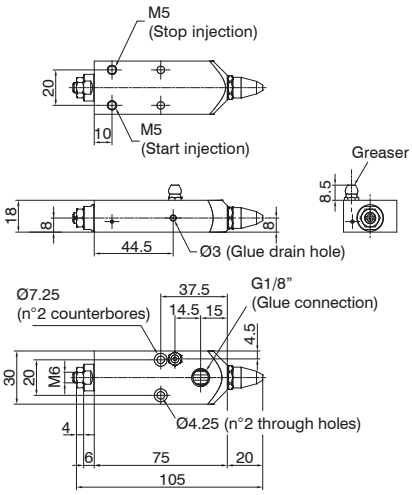

Construction characteristics

- External components: nickel-plated brass / stainless steel
- Piloting connections: M5
- Glue connection: G1/8"
- Glue Seal: special PTFE
- Pneumatic seals: NBR
- Grease nipple: Stainless steel
- Spray intensity adjustment screw: Stainless steel

Technical characteristics	
Injection fluid	Vinyl glue
Pressure Glue (bar)	7
Pneumatic fluid piloting	Filtered air. No lubrication needed, if applied it shall be continuous
Opening pilot (bar)	3 ÷ 6
Closing pilot (bar)	3 ÷ 6 (or spring)
Temperature °C	-5 ÷ +70
Weight (g)	285

Overall dimensions and technical information are provided solely for informative purposes and may be modified without notice

Series 50

General

The blocking valves are used to maintain pressure in the downstream part of the pneumatic circuit even when the pressure supply is shut down.
Blocking valves are normally assembled directly on cylinders ports in order to maintain the position even in cases of accidental loss of the pilot pressure by preventing a sudden loss of pressure in the cylinder chambers.
Unidirectional and bidirectional version are both available.
The unidirectional version allows free air to flow in one direction while requires a pneumatic signal to allow air flow in the opposite direction.
The bidirectional version requires a pressure signal to allow air flow in both of the two directions.
The blocking valve cannot be used as safety device.

Constructive features

UNIDIRECTIONAL VERSION

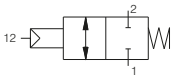

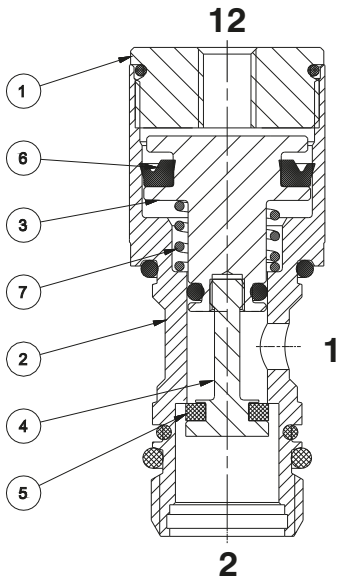

1 - Aluminium piston
2 - Brass plug
3 - Brass body
4 - FPM poppet (1/8" and 1/4" version) PUR poppet
5 - NBR seal
6 - Steel spring

BIDIRECTIONAL VERSION

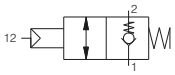

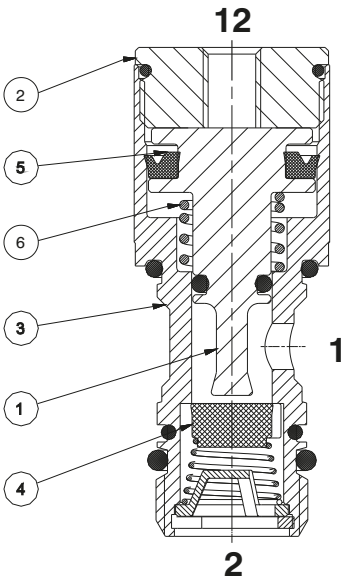

1 - Brass plug
2 - Brass body
3 - Aluminium piston
4 - Steel piston extension
5 - PUR poppet
6 - NBR seal
7 - Steel spring

Working curves

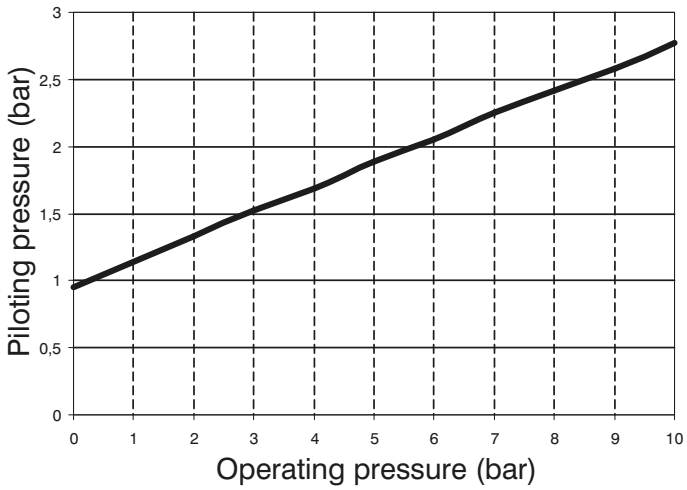

Blocking valves metal type - Size 1/8"

Coding: 50 Ⓣ 18 Ⓥ

Operational characteristics	
Fluid	Filtered air. No lubrication needed, if applied it shall be continuous
Max working pressure (bar)	0,5 ÷ 10
Temperature °C	-5 ÷ +50
Flow rate at 6 bar with Δp=1 (Nl/min)	285
Flow rate with free exhaus (Nl/min)	450

Ⓣ	METAL TYPE
	A = Banjo only
	04 = Banjo Ø4
	06 = Banjo Ø6
	08 = Banjo Ø8
	18 = Banjo G1/8"
Ⓥ	VERSION
	U = Unidirectional
	B = Bidirectional

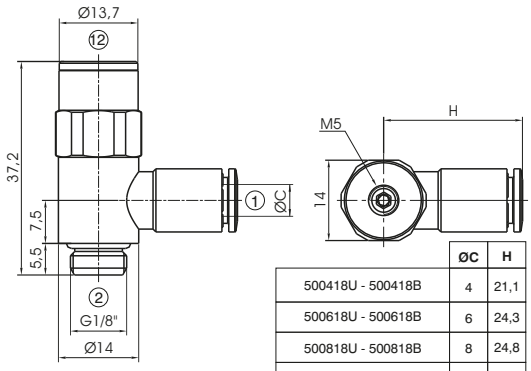

	ØC	H
500418U - 500418B	4	21,1
500618U - 500618B	6	24,3
500818U - 500818B	8	24,8
501818U - 501818B	G1/8"	20

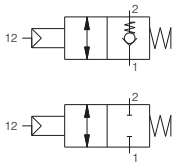

Blocking valves metal type - Size 1/4"

Coding: 50 Ⓣ 14 Ⓥ

Operational characteristics	
Fluid	Filtered air. No lubrication needed, if applied it shall be continuous
Max working pressure (bar)	0,5 ÷ 10
Temperature °C	-5 ÷ +50
Flow rate at 6 bar with Δp=1 (Nl/min)	530
Flow rate with free exhaus (Nl/min)	800

Ⓣ	METAL TYPE
	A = Banjo only
	06 = Banjo Ø6
	08 = Banjo Ø8
	10 = Banjo Ø10
	14 = Banjo G1/4"
Ⓥ	VERSION
	U = Unidirectional
	B = Bidirectional

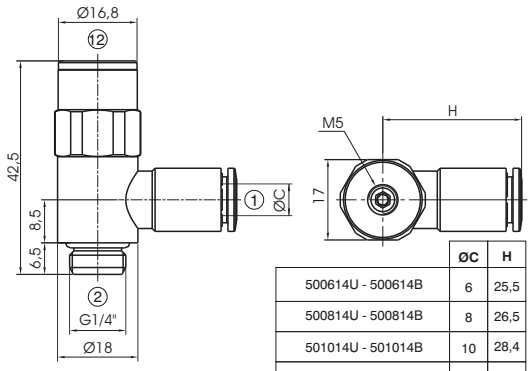

	ØC	H
500614U - 500614B	6	25,5
500814U - 500814B	8	26,5
501014U - 501014B	10	28,4
501414U - 501414B	G1/4"	24

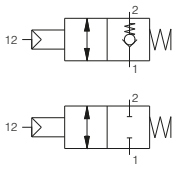

Blocking valves metal type - Size3/8"

Coding: 50 Ⓣ 38 Ⓥ

Operational characteristics	
Fluid	Filtered air. No lubrication needed, if applied it shall be continuous
Max working pressure (bar)	0,5 ÷ 10
Temperature °C	-5 ÷ +50
Flow rate at 6 bar with Δp=1 (Nl/min)	1000
Flow rate with free exhaus (Nl/min)	1600

Ⓣ	METAL TYPE
	A = Banjo only
	08 = Banjo Ø8
	10 = Banjo Ø10
	12 = Banjo Ø12
	38 = Banjo G3/8"
Ⓥ	VERSION
	U = Unidirectional
	B = Bidirectional

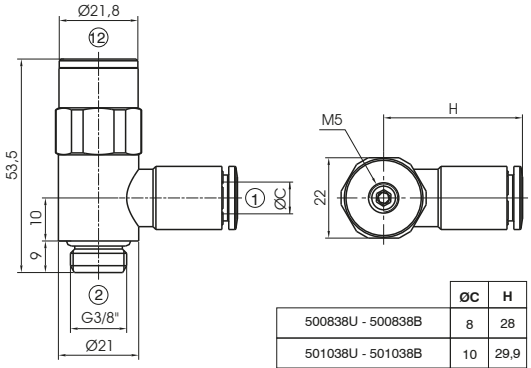

	ØC	H
500838U - 500838B	8	28
501038U - 501038B	10	29,9
501238U - 501238B	12	31,4
503838U - 503838B	G3/8"	28,5

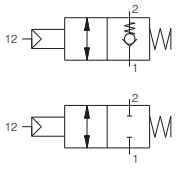

Overall dimensions and technical information are provided solely for informative purposes and may be modified without notice

Blocking valves metal type - Size1/2"

Coding: 50Ⓣ12Ⓥ

Operational characteristics	
Fluid	Filtered air. No lubrication needed, if applied it shall be continuous
Max working pressure (bar)	0,5 ÷ 10
Temperature °C	-5 ÷ +50
Flow rate at 6 bar with Δp=1 (Nl/min)	1300
Flow rate with free exhaus (Nl/min)	2600

Ⓣ	METAL TYPE
	A = Banjo only
	12 = Banjo Ø12
	G12 = Banjo G1/2"
Ⓥ	VERSION
	U = Unidirectional
	B = Bidirectional

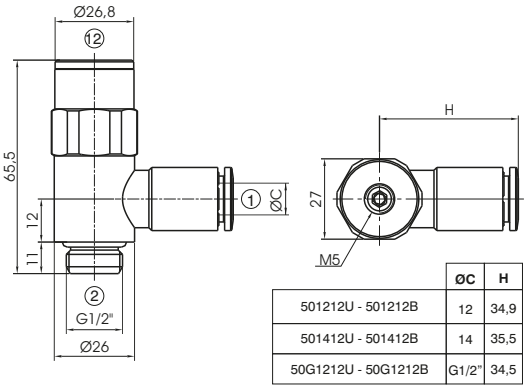

	ØC	H
501212U - 501212B	12	34,9
501412U - 501412B	14	35,5
50G1212U - 50G1212B	G1/2"	34,5

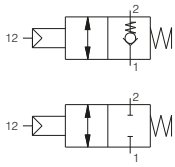

Blocking valves technopolymer type - Size 1/8"

Coding: T50❶18Ⓥ

Operational characteristics	
Fluid	Filtered air. No lubrication needed, if applied it shall be continuous
Max working pressure (bar)	0,5 ÷ 10
Temperature °C	-5 ÷ +50
Flow rate at 6 bar with Δp=1 (Nl/min)	285
Flow rate with free exhaus (Nl/min)	450

❶	METAL TYPE
	A = Banjo only
	04 = Banjo Ø4
	06 = Banjo Ø6
	08 = Banjo Ø8
Ⓥ	VERSION
	U = Unidirectional
	B = Bidirectional

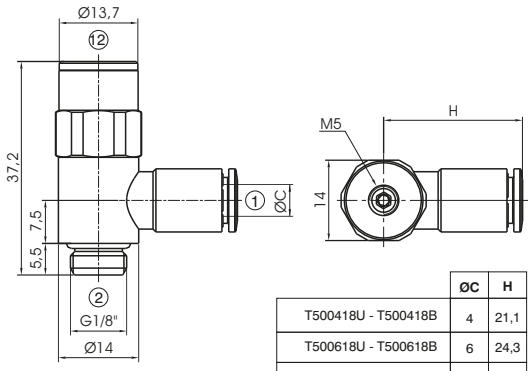

	ØC	H
T500418U - T500418B	4	21,1
T500618U - T500618B	6	24,3
T500818U - T500818B	8	24,8

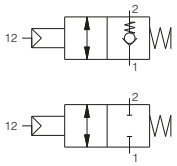

Blocking valves technopolymer type - Size 1/4"

Coding: T50❶14Ⓥ

Operational characteristics	
Fluid	Filtered air. No lubrication needed, if applied it shall be continuous
Max working pressure (bar)	0,5 ÷ 10
Temperature °C	-5 ÷ +50
Flow rate at 6 bar with Δp=1 (Nl/min)	530
Flow rate with free exhaus (Nl/min)	800

❶	METAL TYPE
	A = Banjo only
	06 = Banjo Ø6
	08 = Banjo Ø8
	10 = Banjo Ø10
Ⓥ	VERSION
	U = Unidirectional
	B = Bidirectional

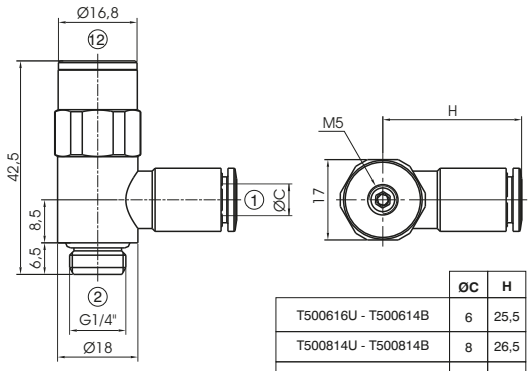

	ØC	H
T500616U - T500614B	6	25,5
T500814U - T500814B	8	26,5
T501014U - T501014B	10	28,4

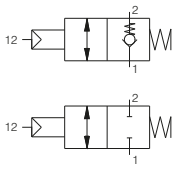

Blocking valves technopolymer type - Size 3/8"

Coding: T50❶38Ⓥ

Operational characteristics	
Fluid	Filtered air. No lubrication needed, if applied it shall be continuous
Max working pressure (bar)	0,5 ÷ 10
Temperature °C	-5 ÷ +50
Flow rate at 6 bar with Δp=1 (Nl/min)	1000
Flow rate with free exhaus (Nl/min)	1600

❶	METAL TYPE
	A = Banjo only
	08 = Banjo Ø8
	10 = Banjo Ø10
	12 = Banjo Ø12
Ⓥ	VERSION
	U = Unidirectional
	B = Bidirectional

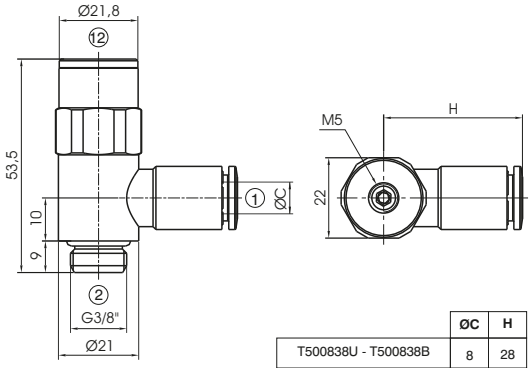

	ØC	H
T500838U - T500838B	8	28
T501038U - T501038B	10	29,9
T501238U - T501238B	12	31,4

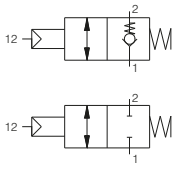

Overall dimensions and technical information are provided solely for informative purposes and may be modified without notice

Blocking valves technopolymer type - Size 1/2"

Coding: T50Ⓣ12Ⓥ

Operational characteristics	
Fluid	Filtered air. No lubrication needed, if applied it shall be continuous
Max working pressure (bar)	0,5 ÷ 10
Temperature °C	-5 ÷ +50
Flow rate at 6 bar with Δp=1 (Nl/min)	1300
Flow rate with free exhaus (Nl/min)	2600

Ⓣ	METAL TYPE
	A = Banjo only
	10 = Banjo Ø10
	12 = Banjo Ø12
Ⓥ	VERSION
	U = Unidirectional
	B = Bidirectional

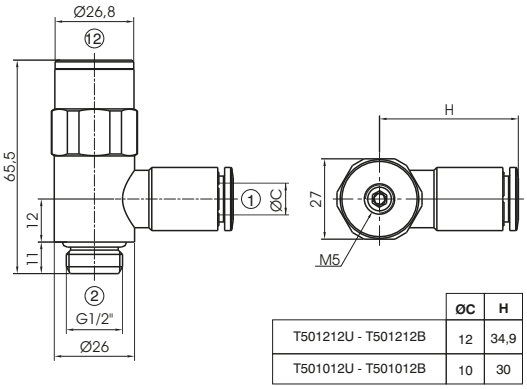

	ØC	H
T501212U - T501212B	12	34,9
T501012U - T501012B	10	30

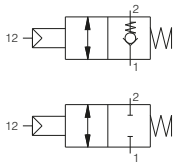

Series 55 Tecno-FUN

General

This line of different logic functions that can be used in any place of the secondary pneumatic circuit, developed to be installed directly onto the main pneumatic components (distributors or cylinders).
Thanks to the modular design it is possible to easily join together multiple logic functions without the need of using pipes to connect them; it is also possible to choose the type and style of each connection. The connections available are the following: straight cartridge; Banjo PL cartridge; male cartridge threaded 1/8" or 1/4" and female cartridge threaded 1/8".
Function fittings can also be assembled side by side in order to be assembled on the DIN EN 50022 rail (using the relevant kit).

Other characteristics:

Technopolymer body
Input/output connection directly integrated into the body
In line or 90° connection
Possibility to build a manifold -parallel mounting-
Different connection options:
Tube Ø4 Ø6 Ø8 (elbow version as well)
G1/8" G1/4" male straight cartridge
G1/8" female cartridge, in line or 90°

Different mounting options:

- Wall fixing through the holes in the body
- By means of the fixing bracket
- Panel mounting (for those function that include such possibility)
- On DIN rail EN 50022 (using the DIN rail adapter kit)

Available functions

- Flow control valve
- Pressure regulator
- Block valve
- Quick exhaust valve
- OR gate
- AND gate
- Pressure gauge
- Progressive start-up valve
- Pressure regulator + pressure gauge
- Block valve + Flow control valve
- Block valve + quick exhaust valve

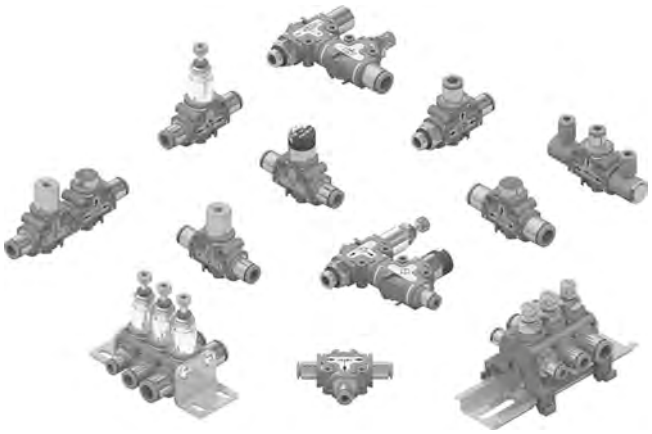

Overall dimensions and technical information are provided solely for informative purposes and may be modified without notice

Flow regulator

Coding: 551.11Ⓣ.Ⓐ.Ⓑ.XX

Ⓣ	TYPE
	1 = Unidirectional
	2 = Bidirectional
Ⓐ	CONNECTION A
	SEE CONNECTIONS LIST
Ⓑ	CONNECTION B
	SEE CONNECTIONS LIST
	CONNECTIONS LIST
	00 = None
	D4 = Straight Ø4
	D6 = Straight Ø6
	D8 = Straight Ø8
	L1 = Female banjo G1/8"
	G4 = Rotating banjo Ø 4
	G6 = Rotating banjo Ø 6
	G8 = Rotating banjo Ø 8
	M1 = G1/8" male
	M2 = G1/4" male
	F1 = G1/8" female

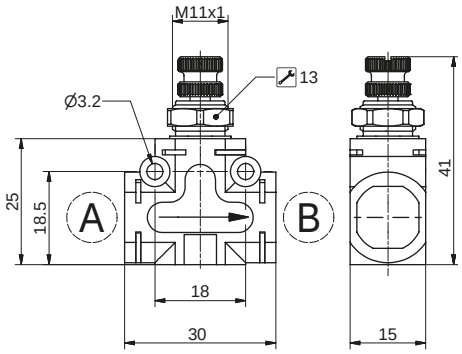

Example: 551.111.D6.D6.XX
Flow control valve unidirectional, CONNECTIONS "A" and "B" Tube Ø6
NOTE : For the dimension including cartridges see page Accessories - Function fittings

Piloting curves

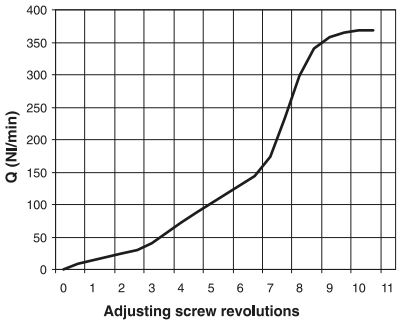

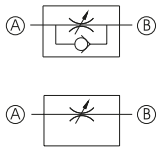

Construction characteristics

- The flow control valve is normally used to regulate the air flow and, as a consequence, for example, the speed of a cylinder. Two types of flow control valves are available: unidirectional and bidirectional. In the unidirectional valve the flow is regulated only in one direction while is free to move in the opposite direction; in the bidirectional valve the flow is regulated in both directions.
- Panel mounting using the lock nut supplied as standard
- on DIN rail using the relevant adaptor kit (see accessories)
- With 90° bracket (see accessories)
- directly on the support plate thanks to two through holes on the body

Technical characteristics	
Fluid	Filtered air. No lubrication needed, if applied it shall be continuous
Working ports size	See CONNECTIONS LIST
Max working pressure (bar)	10
Orifice size (mm)	Ø3
Free exhaust flow rate in the opposite side of the regulation	800 (for unidirectional version)
Temperature °C	-5 ÷ +50
Weight (g)	26

In line pressure regulator

Coding: 551.12Ⓣ.Ⓐ.Ⓑ.XX

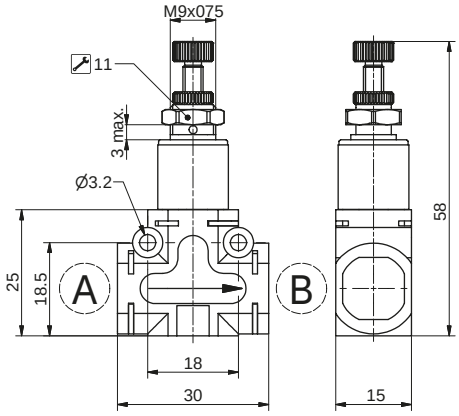

Ⓣ	TYPE
	2 = 0-2 bar
	4 = 0-4 bar
	8 = 0-8 bar
Ⓐ	CONNECTION A
	SEE CONNECTIONS LIST
Ⓑ	CONNECTION B
	SEE CONNECTIONS LIST
	CONNECTIONS LIST
	00 = None
	D4 = Straight Ø4
	D6 = Straight Ø6
	D8 = Straight Ø8
	L1 = Female banjo G1/8"
	G4 = Rotating banjo Ø 4
	G6 = Rotating banjo Ø 6
	G8 = Rotating banjo Ø 8
	M1 = G1/8" male
	M2 = G1/4" male
	F1 = G1/8" female

Example: 551.128.D8.D8.XX
In line pressure regulator, pressure range (bar) 0-8 bar. Connections "A" and "B" Tube Ø6
NOTE : For the dimension including cartridges see page Accessories - Function fittings

Construction characteristics

- The pressure regulator is a device which is used to reduce, regulate and stabilize the air pressure in a conduit in order to adapt it to the needs of the equipments to be supplied. The pressure regulator incorporates the relieving function.
- Panel mounting using the lock nut supplied as standard
- on DIN rail using the relevant adaptor kit (see accessories)
- With 90° bracket (see accessories)
- directly on the support plate thanks to two through holes on the body

Technical characteristics	
Fluid	Filtered air. No lubrication needed, if applied it shall be continuous
Working ports size	See CONNECTIONS LIST
Max working pressure (bar)	10
Flow rate at 6 bar with Δp=1 (Nl/min)	180
Pressure range (bar)	0÷2 / 0÷4 / 0÷8
Temperature °C	-5 ÷ +50
Weight (g)	31

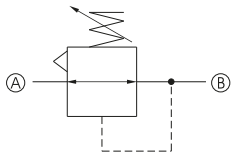

90° pressure regulator

Coding: 551.22Ⓣ.Ⓐ.Ⓑ.XX

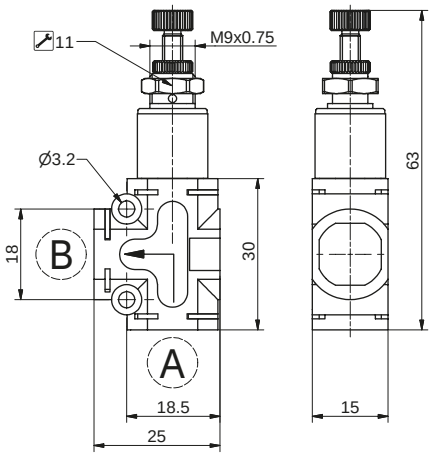

Ⓣ	TYPE
	2 = 0-4 bar
	4 = 0-2 bar
	8 = 0-8 bar
Ⓐ	CONNECTION A
	SEE CONNECTIONS LIST
Ⓑ	CONNECTION B
	SEE CONNECTIONS LIST
	CONNECTIONS LIST
	00 = None
	D4 = Straight Ø4
	D6 = Straight Ø6
	D8 = Straight Ø8
	L1 = Female banjo G1/8"
	G4 = Rotating banjo Ø 4
	G6 = Rotating banjo Ø 6
	G8 = Rotating banjo Ø 8
	M1 = G1/8" male
	M2 = G1/4" male
	F1 = G1/8" female

Example: 551.224.M1.D6.XX
90° pressure regulator, pressure range (bar) 0 - 4 bar. Connections "A" Male G1/8 and "B" Tube Ø6
NOTE : For the dimension including cartridges see page Accessories - Function fittings

Construction characteristics

- The pressure regulator is a device which is used to reduce, regulate and stabilize the air pressure in a conduit in order to adapt it to the needs of the equipments to be supplied. The pressure regulator incorporates the relieving function.
- Panel mounting using the lock nut supplied as standard
- on DIN rail using the relevant adaptor kit (see accessories)
- With 90° bracket (see accessories)
- directly on the support plate thanks to two through holes on the body

Technical characteristics	
Fluid	Filtered air. No lubrication needed, if applied it shall be continuous
Working ports size	See CONNECTIONS LIST
Max working pressure (bar)	10
Flow rate at 6 bar with Δp=1 (Nl/min)	180
Pressure range (bar)	0÷2 / 0÷4 / 0÷8
Temperature °C	-5 ÷ +50
Weight (g)	31

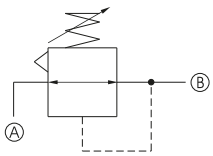

Overall dimensions and technical information are provided solely for informative purposes and may be modified without notice

Blocking valve

Coding: 551.13Ⓣ.Ⓐ.Ⓑ.XX

Ⓣ	TYPE
	1 = Unidirectional
	2 = Bidirectional
Ⓐ	CONNECTION A
	SEE CONNECTIONS LIST
Ⓑ	CONNECTION B
	SEE CONNECTIONS LIST
	CONNECTIONS LIST
	00 = None
	D4 = Straight Ø4
	D6 = Straight Ø6
	D8 = Straight Ø8
	L1 = Female banjo G1/8"
	G4 = Rotating banjo Ø 4
	G6 = Rotating banjo Ø 6
	G8 = Rotating banjo Ø 8
	M1 = G1/8" male
	M2 = G1/4" male
	F1 = G1/8" female

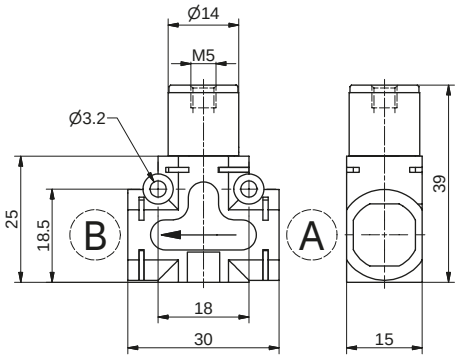

Example: 551.131.D4.D4.XX
In line blocking valve, unidirectional. Connections "A" and "B" Tube Ø4
NOTE : For the dimension including cartridges see page Accessories - Function fittings

Piloting curves

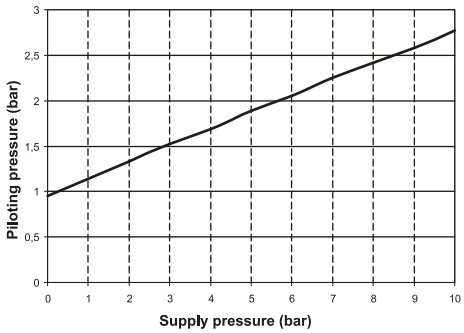

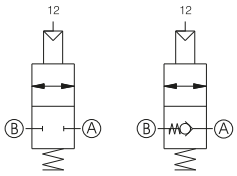

Construction characteristics

- The blocking valve function is to maintain the circuit downstream pressure in the event of loss of supply pressure. It is normally fitted directly onto the cylinder connections ports in order to ensure that, in case of accidental loss of the supply pressure, the units positions is maintained. This is achieved as the blocking valve preserves the pressure inside the pressurised chamber. Blocking valves can be unidirectional or bidirectional.
- In the unidirectional version the air flow is free in one direction while in order to allow the flow in the opposite direction is necessary to send a pneumatic signal to the unit connection 12.
- The bidirectional version requires a pneumatic signal on connection 12 to allow the flow in any of the two directions.
- on DIN rail using the relevant adaptor kit (see accessories)
- With 90° bracket (see accessories)
- directly on the support plate thanks to two through holes on the body

Technical characteristics	
Fluid	Filtered air. No lubrication needed, if applied it shall be continuous
Working ports size	See CONNECTIONS LIST
Max working pressure (bar)	0,5 ÷ 10
Flow rate at 6 bar with Δp=1 (Nl/min)	285
Flow rate at 6 bar with free exhaust (Nl/min)	450
Temperature °C	-5 ÷ +50
Weight (g)	26

90° blocking valve

Coding: 551.23Ⓣ.Ⓐ.Ⓑ.XX

Ⓣ	TYPE
	1 = Unidirectional
	2 = Bidirectional
Ⓐ	CONNECTION A
	SEE CONNECTIONS LIST
Ⓑ	CONNECTION B
	SEE CONNECTIONS LIST
	CONNECTIONS LIST
	00 = None
	D4 = Straight Ø4
	D6 = Straight Ø6
	D8 = Straight Ø8
	L1 = Female banjo G1/8"
	G4 = Rotating banjo Ø 4
	G6 = Rotating banjo Ø 6
	G8 = Rotating banjo Ø 8
	M1 = G1/8" male
	M2 = G1/4" male
	F1 = G1/8" female

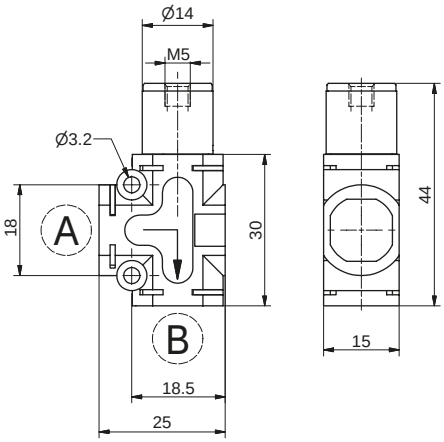

Example: 551.231.D6.M1.XX
90° blocking valve. Connections "A" Male G1/8 and "B" Tube Ø6
NOTE : For the dimension including cartridges see page Accessories - Function fittings

Piloting curves

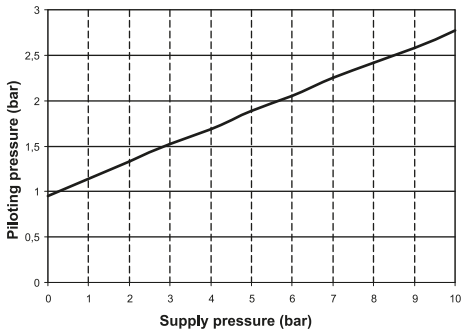

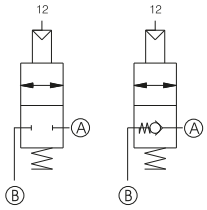

Construction characteristics

- The blocking valve function is to maintain the circuit downstream pressure in the event of loss of supply pressure. It is normally fitted directly onto the cylinder connections ports in order to ensure that, in case of accidental loss of the supply pressure, the units positions is maintained. This is achieved as the blocking valve preserves the pressure inside the pressurised chamber.
- Unidirectional and bidirectional version are both available.
- In the unidirectional version the air flow is free in one direction while in order to allow the flow in the opposite direction is necessary to send a pneumatic signal to the unit connection 12.
- The bidirectional version requires a pneumatic signal on connection 12 to allow the flow in any of the two directions.
- on DIN rail using the relevant adaptor kit (see accessories)
- With 90° bracket (see accessories)
- directly on the support plate thanks to two through holes on the body

Technical characteristics	
Fluid	Filtered air. No lubrication needed, if applied it shall be continuous
Working ports size	See CONNECTIONS LIST
Max working pressure (bar)	0,5 ÷ 10
Flow rate at 6 bar with Δp=1 (Nl/min)	285
Flow rate at 6 bar with free exhaust (Nl/min)	450
Temperature °C	-5 ÷ +50
Weight (g)	26

Overall dimensions and technical information are provided solely for informative purposes and may be modified without notice

Circuit selector valve - OR

Coding: 551.141.Ⓐ.Ⓑ.Ⓒ

Ⓐ	CONNECTION A
	SEE CONNECTIONS LIST
Ⓑ	CONNECTION B
	SEE CONNECTIONS LIST
Ⓒ	CONNECTION C
	SEE CONNECTIONS LIST
	CONNECTIONS LIST
	00 = None
	D4 = Straight Ø4
	D6 = Straight Ø6
	D8 = Straight Ø8
	L1 = Female banjo G1/8"
	G4 = Rotating banjo Ø 4
	G6 = Rotating banjo Ø 6
	G8 = Rotating banjo Ø 8
	M1 = G1/8" male
	M2 = G1/4" male
	F1 = G1/8" female

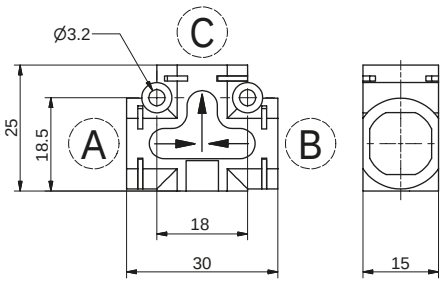

Example: 551.141.D8.D8.D8
Circuit selector valve - OR. Connections "A", "B" and "C" Tube Ø8
NOTE : For the dimension including cartridges see page Accessories - Function fittings

Construction characteristics

- These valves have two inlets and one output connection and are normally called high pressure selector valves as, when receiving two separate pressure supply, only allow the passage of the highest pressure. The most common application is to operate a component from two separate positions.
- on DIN rail using the relevant adaptor kit (see accessories)
- With 90° bracket (see accessories)
- directly on the support plate thanks to two through holes on the body

Technical characteristics	
Fluid	Filtered air. No lubrication needed, if applied it shall be continuous
Working ports size	See CONNECTIONS LIST
Max working pressure (bar)	10
Flow rate at 6 bar with Δp=1 (Nl/min)	600
Temperature °C	-5 ÷ +50
Weight (g)	10

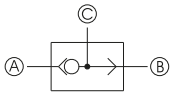

Circuit selector valve - AND

Coding: 551.151.Ⓐ.Ⓑ.Ⓒ

Ⓐ	CONNECTION A
	SEE CONNECTIONS LIST
Ⓑ	CONNECTION B
	SEE CONNECTIONS LIST
Ⓒ	CONNECTION C
	SEE CONNECTIONS LIST
	CONNECTIONS LIST
	00 = None
	D4 = Straight Ø4
	D6 = Straight Ø6
	D8 = Straight Ø8
	L1 = Female banjo G1/8"
	G4 = Rotating banjo Ø 4
	G6 = Rotating banjo Ø 6
	G8 = Rotating banjo Ø 8
	M1 = G1/8" male
	M2 = G1/4" male
	F1 = G1/8" female

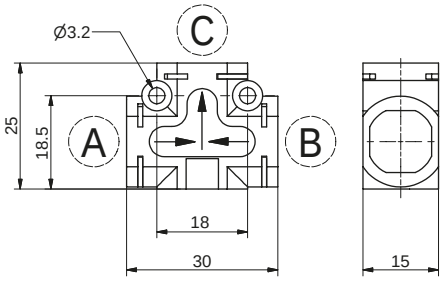

Example: 551.151.D6.D6.D6
Circuit selector valve AND. Connections "A", "B" and "C" Tube Ø6
NOTE : For the dimension including cartridges see page Accessories - Function fittings

Construction characteristics

- These valves have two inlets and one output connection and are normally called low pressure selector valves as, when receiving two separate pressure supply, only allow the passage of the lowest pressure. The most common application is to operate a component from two separate positions.
- on DIN rail using the relevant adaptor kit (see accessories)
- With 90° bracket (see accessories)
- directly on the support plate thanks to two through holes on the body

Technical characteristics	
Fluid	Filtered air. No lubrication needed, if applied it shall be continuous
Working ports size	See CONNECTIONS LIST
Max working pressure (bar)	10
Flow rate at 6 bar with Δp=1 (Nl/min)	550
Temperature °C	-5 ÷ +50
Weight (g)	10

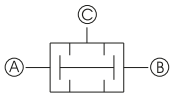

Quick exhaust valve

Coding: 551.161.Ⓐ.Ⓑ.XX

Ⓐ	CONNECTION A
	SEE CONNECTIONS LIST
Ⓑ	CONNECTION B
	SEE CONNECTIONS LIST
	CONNECTIONS LIST
	00 = None
	D4 = Straight Ø4
	D6 = Straight Ø6
	D8 = Straight Ø8
	L1 = Female banjo G1/8"
	G4 = Rotating banjo Ø 4
	G6 = Rotating banjo Ø 6
	G8 = Rotating banjo Ø 8
	M1 = G1/8" male
	M2 = G1/4" male
	F1 = G1/8" female

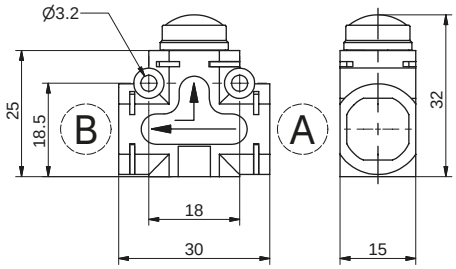

Example: 551.161.D8.D8.XX
Quick exhaust valve. Connections "A" and "B" Tube Ø6
NOTE : For the dimension including cartridges see page Accessories - Function fittings

Construction characteristics

- These are 3 ways, two positions valves which can be directly mounted onto the actuator or between the actuator and the control valve. Their function is to discharge the air directly into the atmosphere without going through the pneumatic circuit enabling the actuator to reach the maximum speed.
- on DIN rail using the relevant adaptor kit (see accessories)
- With 90° bracket (see accessories)
- directly on the support plate thanks to two through holes on the body

Technical characteristics	
Fluid	Filtered air. No lubrication needed, if applied it shall be continuous
Working ports size	See CONNECTIONS LIST
Max working pressure (bar)	10
Flow rate at 6 bar with Δp=1 (Nl/min)	250
Flow rate at 6 bar with free exhaust (Nl/min)	500
Temperature °C	-5 ÷ +50
Weight (g)	15

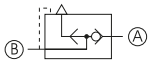

Pressure indicator

Coding: 551.178.Ⓐ.Ⓑ.XX

Ⓐ	CONNECTION A
	SEE CONNECTIONS LIST
Ⓑ	CONNECTION B
	SEE CONNECTIONS LIST
	CONNECTIONS LIST
	00 = None
	D4 = Straight Ø4
	D6 = Straight Ø6
	D8 = Straight Ø8
	L1 = Female banjo G1/8"
	G4 = Rotating banjo Ø 4
	G6 = Rotating banjo Ø 6
	G8 = Rotating banjo Ø 8
	M1 = G1/8" male
	M2 = G1/4" male
	F1 = G1/8" female

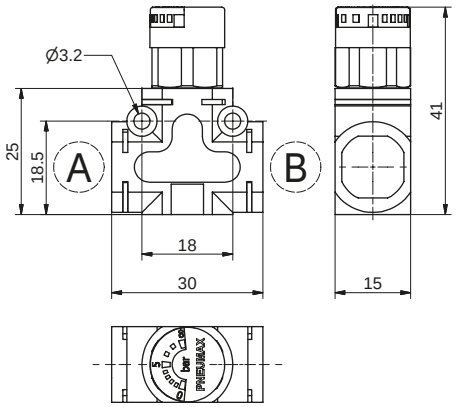

Example: 551.178.D6.D4.XX
Pressure indicator. Connections "A" Tube Ø6, "B" Tube Ø4
NOTE : For the dimension including cartridges see page Accessories - Function fittings

Construction characteristics

- The pressure visual indicator is a device which measures the pressure inside a pneumatic circuit. The 0 to 8 bar visual indicator makes very easy to monitor the pressure state inside the circuit. It can be use on its own or can be coupled with another device.
- It can be use on its own or can be coupled with another device.
- on DIN rail using the relevant adaptor kit (see accessories)
- With 90° bracket (see accessories)
- directly on the support plate thanks to two through holes on the body

Technical characteristics	
Fluid	Filtered air. No lubrication needed, if applied it shall be continuous
Working ports size	See CONNECTIONS LIST
Max working pressure (bar)	8
Visualization scale (bar)	0 ÷ 8
Temperature °C	-5 ÷ +50
Weight (g)	20.5

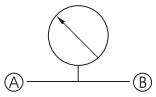

Overall dimensions and technical information are provided solely for informative purposes and may be modified without notice

In line progressive start-up valve

Coding: 551.181.Ⓐ.Ⓑ.XX

Ⓐ	CONNECTION A
	SEE CONNECTIONS LIST
Ⓑ	CONNECTION B
	SEE CONNECTIONS LIST
	CONNECTIONS LIST
	00 = None
	D4 = Straight Ø4
	D6 = Straight Ø6
	D8 = Straight Ø8
	L1 = Female banjo G1/8"
	G4 = Rotating banjo Ø 4
	G6 = Rotating banjo Ø 6
	G8 = Rotating banjo Ø 8
	M1 = G1/8" male
	M2 = G1/4" male
	F1 = G1/8" female

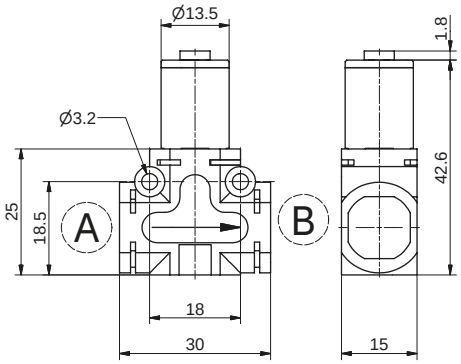

Example: 551.181.D6.D4.XX
In line progressive start-up valve. Connections "A" Tube Ø6, "B" Tube Ø4
NOTE : For the dimension including cartridges see page Accessories - Function fittings

Construction characteristics

- The soft start valve is a device designed to gradually pressurise the downstream circuit until 50% of the upstream pressure value is reached.
- Once the 50% of the upstream pressure value is reached in the down stream circuit the valve fully opens allowing full air passage.
- The filling time can be adjusted thanks to the built in flow regulator.
- This device is used in order to ensure that during the pneumatic circuit start up the cylinders will return to theirs home position slowly avoiding collisions or sudden movements.

Technical characteristics	
Fluid	Filtered air. No lubrication needed, if applied it shall be continuous
Working ports size	See CONNECTIONS LIST
Opening pressure (Pa)	50% of the inlet pressure (Pi)
Flow rate at 6 bar with free exhaust (Nl/min) from 1 to 2 with opening ciruit	350
Flow rate at 6 bar with Δp=1 from 1 to 2 with opening ciruit	600
Flow rate at 6 bar with Δp=1 from 2 to 1 with opening pin	650
Temperature °C	-5 ÷ +50
Weight (g)	31

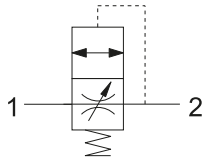

90° progressive start-up valve

Coding: 551.281.Ⓐ.Ⓑ.XX

Ⓐ	CONNECTION A
	SEE CONNECTIONS LIST
Ⓑ	CONNECTION B
	SEE CONNECTIONS LIST
	CONNECTIONS LIST
	00 = None
	D4 = Straight Ø4
	D6 = Straight Ø6
	D8 = Straight Ø8
	L1 = Female banjo G1/8"
	G4 = Rotating banjo Ø 4
	G6 = Rotating banjo Ø 6
	G8 = Rotating banjo Ø 8
	M1 = G1/8" male
	M2 = G1/4" male
	F1 = G1/8" female

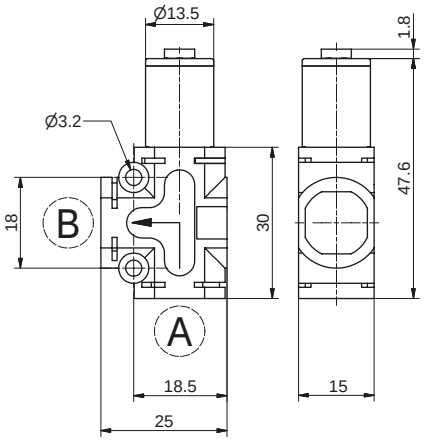

Example: 551.281.M1.D4.XX
90° progressive start-up valve. connections "A" Male G1/8", "B" Tube Ø4
NOTE : For the dimension including cartridges see page Accessories - Function fittings

Construction characteristics

- The soft start valve is a device designed to gradually pressurise the downstream circuit until 50% of the upstream pressure value is reached.
- Once the 50% of the upstream pressure value is reached in the down stream circuit the valve fully opens allowing full air passage.
- The filling time can be adjusted thanks to the built in flow regulator.
- This device is used in order to ensure that during the pneumatic circuit start up the cylinders will return to theirs home position slowly avoiding collisions or sudden movements.

Technical characteristics	
Fluid	Filtered air. No lubrication needed, if applied it shall be continuous
Working ports size	See CONNECTIONS LIST
Opening pressure (Pa)	50% of the inlet pressure (Pi)
Flow rate at 6 bar with free exhaust (Nl/min) from 1 to 2 with opening ciruit	350
Flow rate at 6 bar with Δp=1 from 1 to 2 with opening ciruit	600
Flow rate at 6 bar with Δp=1 from 2 to 1 with opening pin	650
Temperature °C	-5 ÷ +50
Weight (g)	31

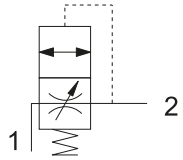

In line blocking valve with flow control valve

Coding: 551.1F🅣.🅐.🅑.XX

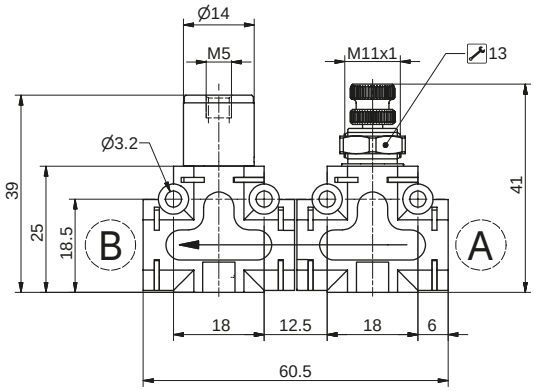

🅣	TYPE
	1 = Unidirectional blocking valve + Unidirectional flow control valve
	2 = Bidirectional blocking valve + Bidirectional flow control valve
	3 = Unidirectional blocking valve + Bidirectional flow control valve
	4 = Bidirectional blocking valve + Unidirectional flow control valve
🅐	CONNECTION A
	SEE CONNECTIONS LIST
🅑	CONNECTION B
	SEE CONNECTIONS LIST
	CONNECTIONS LIST
	00 = None
	D4 = Straight Ø4
	D6 = Straight Ø6
	D8 = Straight Ø8
	L1 = Female banjo G1/8"
	G4 = Rotating banjo Ø 4
	G6 = Rotating banjo Ø 6
	G8 = Rotating banjo Ø 8
	M1 = G1/8" male
	M2 = G1/4" male
	F1 = G1/8" female

Example: 551.1F1.00.00.XX
In line blocking valve + flow control valve. Without connections "A" and "B"
NOTE : For the dimension including cartridges see page Accessories - Function fittings

Piloting curves

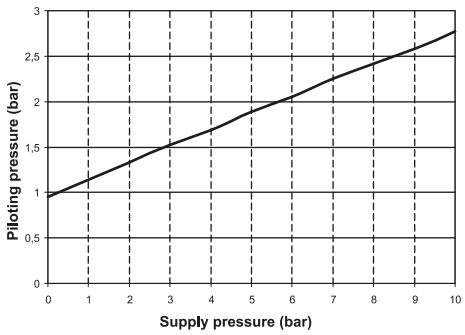

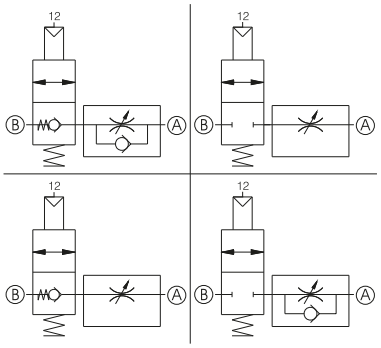

Construction characteristics

- The combination of this two functions ensures that the downstream pressure is maintained in case of accidental loss of supply pressure and at the same time grants the possibility to regulate the circuit flow rate. A typical application of this combination is close to or directly assembled onto the actuator connection ports. This allows to keep pressurised the cylinder chamber in case of accidental loss of supply pressure and to regulate the exhaust flow rate when the blocking valve is actuated.
- The possible combinations are the following:
- Unidirectional blocking valve + unidirectional flow control valve
- Bidirectional blocking valve + bidirectional flow control valve
- Bidirectional blocking valve + unidirectional flow control valve
- Unidirectional blocking valve + bidirectional flow control valve

Technical characteristics	
Fluid	Filtered air. No lubrication needed, if applied it shall be continuous
Working ports size	See CONNECTIONS LIST
Max working pressure (bar)	0,5 ÷ 10
Flow rate at 6 bar with Δp=1 (Nl/min)	285
Orifice size (mm)	Ø3
Temperature °C	-5 ÷ +50
Weight (g)	62

Overall dimensions and technical information are provided solely for informative purposes and may be modified without notice

90° blocking valve + flow control valve

Coding: 551.2F❶.Ⓐ.Ⓑ.XX

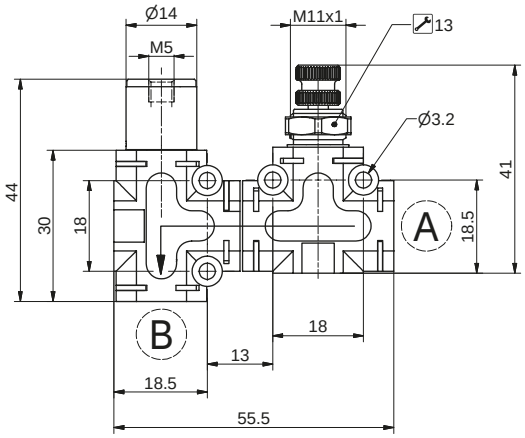

❶	TYPE
	1 = 90° Unidirectional blocking valve + Unidirectional flow control valve
	2 = 90° Bidirectional blocking valve + Bidirectional flow control valve
	3 = 90° Unidirectional blocking valve + Bidirectional flow control valve
	4 = 90° Bidirectional blocking valve + Unidirectional flow control valve
Ⓐ	CONNECTION A
	SEE CONNECTIONS LIST
Ⓑ	CONNECTION B
	SEE CONNECTIONS LIST
	CONNECTIONS LIST
	00 = None
	D4 = Straight Ø4
	D6 = Straight Ø6
	D8 = Straight Ø8
	L1 = Female banjo G1/8"
	G4 = Rotating banjo Ø 4
	G6 = Rotating banjo Ø 6
	G8 = Rotating banjo Ø 8
	M1 = G1/8" male
	M2 = G1/4" male
	F1 = G1/8" female

Example: 5512F1.00.00.XX
90° blocking valve + flow control valve. Without connections "A" and "B"
NOTE : For the dimension including cartridges see page Accessories - Function fittings

Piloting curves

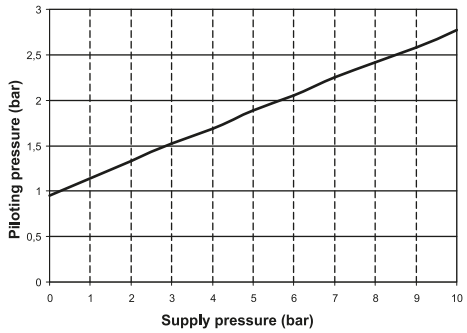

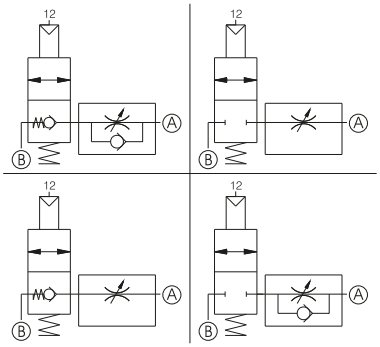

Construction characteristics

- The combination of this two functions ensures that the downstream pressure is maintained in case of accidental loss of supply pressure and at the same time grants the possibility to regulate the circuit flow rate. A typical application of this combination is close to or directly assembled onto the actuator connection ports. This allows to keep pressurised the cylinder chamber in case of accidental loss of supply pressure and to regulate the exhaust flow rate when the blocking valve is actuated.
- The possible combinations are the following:
- 90° Unidirectional blocking valve + Unidirectional flow control valve
- 90° Bidirectional blocking valve + Bidirectional flow control valve
- 90° Bidirectional blocking valve + Unidirectional flow control valve
- 90° Unidirectional blocking valve + Bidirectional flow control valve

Technical characteristics	
Fluid	Filtered air. No lubrication needed, if applied it shall be continuous
Working ports size	See CONNECTIONS LIST
Max working pressure (bar)	0,5 ÷ 10
Flow rate at 6 bar with Δp=1 (Nl/min)	285
Orifice size (mm)	Ø3
Temperature °C	-5 ÷ +50
Weight (g)	62

In line blocking valve + quick exhaust valve

Coding: 551.1G❶.Ⓐ.Ⓑ.XX

❶	TYPE
	1 = Unidirectional blocking valve + quick exhaust valve
	2 = Bidirectional blocking valve + quick exhaust valve
Ⓐ	CONNECTION A
	SEE CONNECTIONS LIST
Ⓑ	CONNECTION B
	SEE CONNECTIONS LIST
	CONNECTIONS LIST
	00 = None
	D4 = Straight Ø4
	D6 = Straight Ø6
	D8 = Straight Ø8
	L1 = Female banjo G1/8"
	G4 = Rotating banjo Ø 4
	G6 = Rotating banjo Ø 6
	G8 = Rotating banjo Ø 8
	M1 = G1/8" male
	M2 = G1/4" male
	F1 = G1/8" female

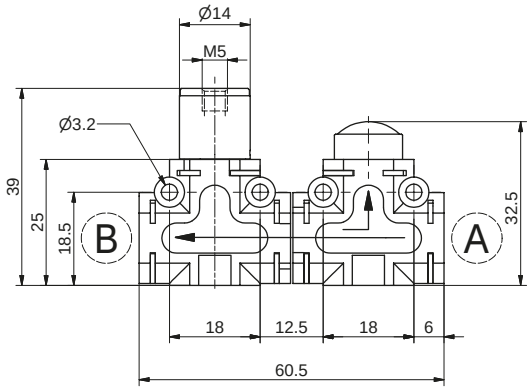

Example: 5511G1.00.00.XX
In line blocking valve + quick exhaust valve. Without connections "A" and "B"
NOTE : For the dimension including cartridges see page Accessories - Function fittings

Piloting curves

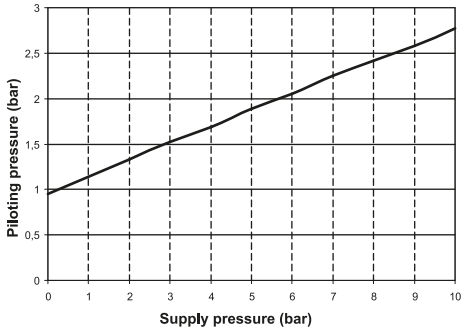

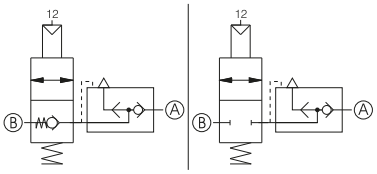

Construction characteristics

- The combination of this two functions ensures that the downstream pressure is maintained in case of accidental loss of supply pressure and at the same time allows for the air to be directly discharged into the atmosphere without going through the pneumatic circuit. A typical application of this combination is close to or directly assembled onto the actuator connection ports. This allows to keep pressurised the cylinder chamber in case of accidental loss of supply pressure and to quickly discharge the same chamber when the blocking valve is actuated.
- The possible combinations are the following:
- Unidirectional blocking valve + quick exhaust valve
- Bidirectional blocking valve + quick exhaust valve

Technical characteristics	
Fluid	Filtered air. No lubrication needed, if applied it shall be continuous
Working ports size	See CONNECTIONS LIST
Max working pressure (bar)	0.5 ÷ 10
Flow rate at 6 bar with Δp=1 (Nl/min)	285
Temperature °C	-5 ÷ +50
Weight (g)	51

Overall dimensions and technical information are provided solely for informative purposes and may be modified without notice

90° blocking valve + quick exhaust valve

Coding: 551.2G❶.Ⓐ.Ⓑ.XX

❶	TYPE
	1 = 90° Unidirectional blocking valve + quick exhaust valve
	2 = 90° Bidirectional blocking valve + quick exhaust valve
Ⓐ	CONNECTION A
	SEE CONNECTIONS LIST
Ⓑ	CONNECTION B
	SEE CONNECTIONS LIST
	CONNECTIONS LIST
	00 = None
	D4 = Straight Ø4
	D6 = Straight Ø6
	D8 = Straight Ø8
	L1 = Female banjo G1/8"
	G4 = Rotating banjo Ø 4
	G6 = Rotating banjo Ø 6
	G8 = Rotating banjo Ø 8
	M1 = G1/8" male
	M2 = G1/4" male
	F1 = G1/8" female

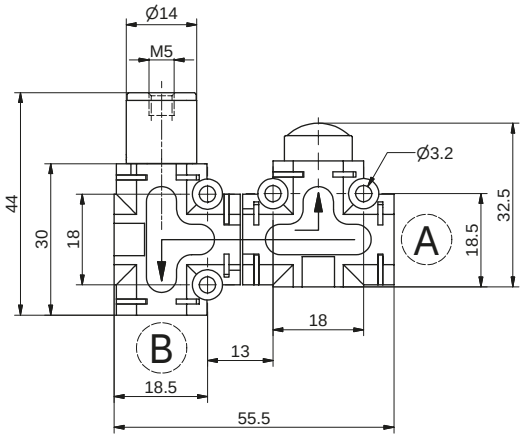

Example: 551.2G1.00.00.XX
90° bidirectional blocking valve + quick exhaust valve. Without connections "A" and "B"
NOTE : For the dimension including cartridges see page Accessories - Function fittings

Piloting curves

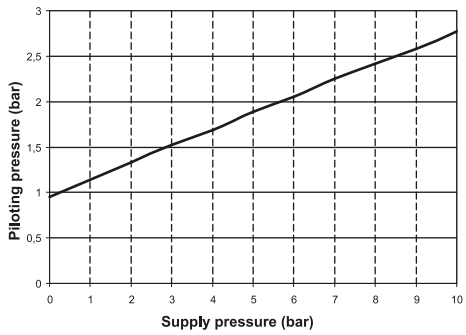

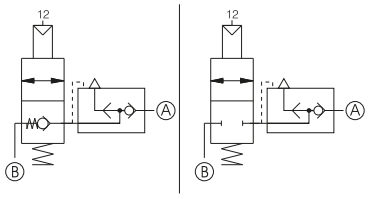

Construction characteristics

- The combination of this two functions ensures that the downstream pressure is maintained in case of accidental loss of supply pressure and at the same time allows for the air to be directly discharged into the atmosphere without going through the pneumatic circuit. A typical application of this combination is close to or directly assembled onto the actuator connection ports. This allows to keep pressurised the cylinder chamber in case of accidental loss of supply pressure and to quickly discharge the same chamber when the blocking valve is actuated.
- The possible combinations are the following:
- 90° Unidirectional blocking valve + quick exhaust valve
- 90° Bidirectional blocking valve + quick exhaust valve

Technical characteristics	
Fluid	Filtered air. No lubrication needed, if applied it shall be continuous
Working ports size	See CONNECTIONS LIST
Max working pressure (bar)	0,5 ÷ 10
Flow rate at 6 bar with Δp=1 (Nl/min)	285
Temperature °C	-5 ÷ +50
Weight (g)	51

In line pressure regulator + pressure indicator

Coding: 551.1H❶.Ⓐ.Ⓑ.XX

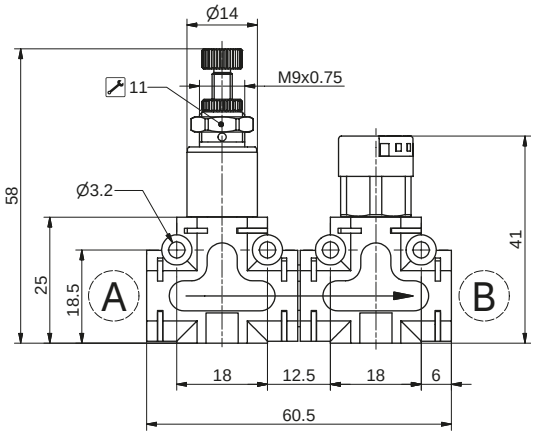

❶	TYPE
	2 = 0-2 bar
	4 = 0-4 bar
	8 = 0-8 bar
Ⓐ	CONNECTION A
	SEE CONNECTIONS LIST
Ⓑ	CONNECTION B
	SEE CONNECTIONS LIST
	CONNECTIONS LIST
	00 = None
	D4 = Straight Ø4
	D6 = Straight Ø6
	D8 = Straight Ø8
	L1 = Female banjo G1/8"
	G4 = Rotating banjo Ø 4
	G6 = Rotating banjo Ø 6
	G8 = Rotating banjo Ø 8
	M1 = G1/8" male
	M2 = G1/4" male
	F1 = G1/8" female

Example: 551.1H2.M1.D4.XX
In line pressure regulator, adjusting range 0 - 2 bar + pressure indicator. Connections "A" Male G 1/8 and "B" Tube Ø4
NOTE : For the dimension including cartridges see page Accessories - Function fittings

Construction characteristics

- The combination of this two functions ensures the possibility to regulate the downstream pressure while directly visualising the adjusted pressure value.
- The possible combinations are the following:
- 0 to 2 bar pressure regulator + pressure visual indicator
- 0 to 4 bar pressure regulator + pressure visual indicator
- 0 to 8 bar pressure regulator + pressure visual indicator
- The visual indicator Pressure range (bar) is always 0 to 8 bar

Technical characteristics	
Fluid	Filtered air. No lubrication needed, if applied it shall be continuous
Working ports size	See CONNECTIONS LIST
Max working pressure (bar)	8
Visualization scale (bar)	0 ÷ 8
Pressure range (bar)	0 ÷ 2 0 ÷ 4 0 ÷ 8
Temperature °C	-5 ÷ +50
Weight (g)	62

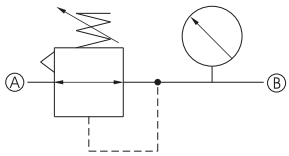

90° pressure regulator + pressure indicator

Coding: 551.2H❶.Ⓐ.Ⓑ.XX

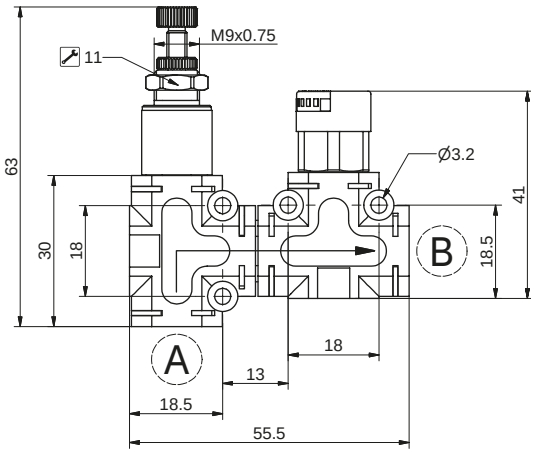

❶	TYPE
	2 = 0-2 bar
	4 = 0-4 bar
	8 = 0-8 bar
Ⓐ	CONNECTION A
	SEE CONNECTIONS LIST
Ⓑ	CONNECTION B
	SEE CONNECTIONS LIST
	CONNECTIONS LIST
	00 = None
	D4 = Straight Ø4
	D6 = Straight Ø6
	D8 = Straight Ø8
	L1 = Female banjo G1/8"
	G4 = Rotating banjo Ø 4
	G6 = Rotating banjo Ø 6
	G8 = Rotating banjo Ø 8
	M1 = G1/8" male
	M2 = G1/4" male
	F1 = G1/8" female

Example: 551.2H2.M1.D4.XX
90° pressure regulator, adjusting range 0 - 2 bar + pressure indicator. Connections "A" Male G 1/8 and "B" Tube Ø4
NOTE : For the dimension including cartridges see page Accessories - Function fittings

Construction characteristics

- The combination of this two functions ensures the possibility to regulate the downstream pressure while directly visualising the adjusted pressure value.
- The possible combinations are the following:
- 0 to 2 bar pressure regulator + pressure visual indicator
- 0 to 4 bar pressure regulator + pressure visual indicator
- 0 to 8 bar pressure regulator + pressure visual indicator
- The visual indicator Pressure range (bar) is always 0 to 8 bar

Technical characteristics	
Fluid	Filtered air. No lubrication needed, if applied it shall be continuous
Working ports size	See CONNECTIONS LIST
Max working pressure (bar)	8
Visualization scale (bar)	0 ÷ 8
Pressure range (bar)	0 ÷ 2 0 ÷ 4 0 ÷ 8
Temperature °C	-5 ÷ +50
Weight (g)	62

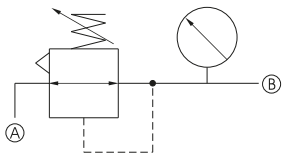

Overall dimensions and technical information are provided solely for informative purposes and may be modified without notice

Coupling kit (pins and forks)

Coding: 55160

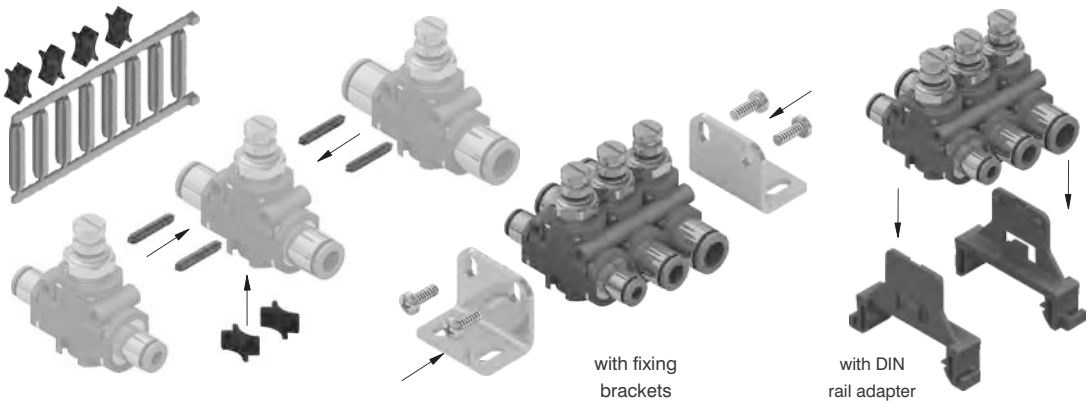

- Weight 2,5 g
- The kit, which includes a series of pins and forks, enables to join together in a fast and safe way the function fittings. The pins, once inserted in the front holes, ensure resistance against forces applied perpendicularly and sideway (for example the insertion of the tube in the cartridges).
- The forks, once located in the profiled housing ensures that the parts are held together tightly.
- The kit allows for 5 function fittings to be mounted together.

Fixing brackets

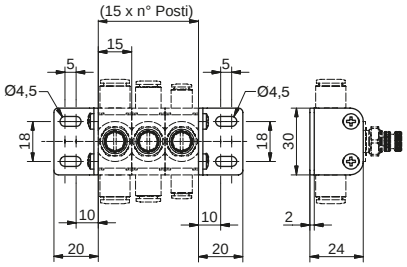

Coding: 55150

Weight 18 g
The kit comprises two fixing brackets and the screws

DIN rail adapter

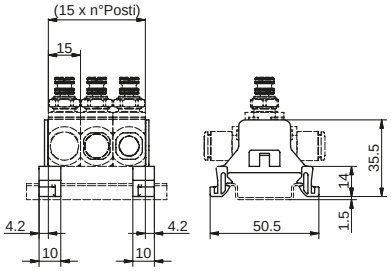

Coding: 55116

Weight 4 g
The kit comprises two adapters

Ø4, Ø6 & Ø8 straight cartridge

Coding: 551KD©

©	CONNECTIONS
	4 = tube Ø4
	6 = tube Ø6
	8 = tube Ø6

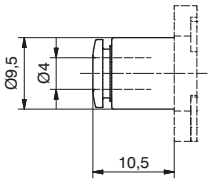

Weight 7,5 g

551KD4

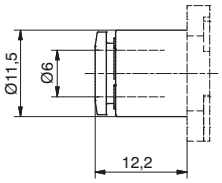

Weight 7,3 g

551KD6

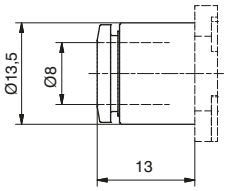

Weight 7 g

551KD8

1

AIR DISTRIBUTION

Ø4, Ø6 & Ø8 banjo PL cartridge

Coding: 551KG©

©	CONNECTIONS
	4 = tube Ø4
	6 = tube Ø6
	8 = tube Ø6

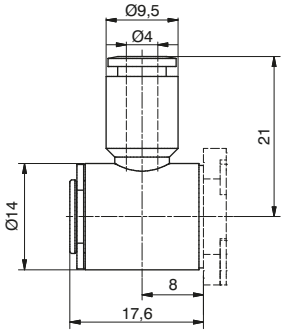

Weight 13,6 g

551KG4

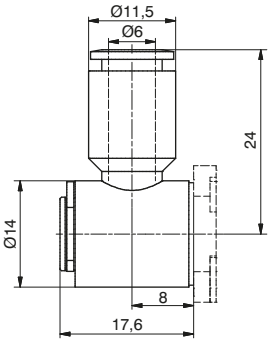

Weight 14 g

551KG6

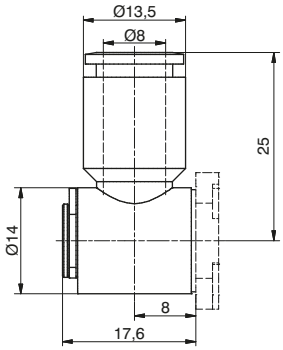

Weight 14,3 g

551KG8

G1/8" banjo artridge

Coding: 551KL©

©	CONNECTIONS
	1 = G1/8"

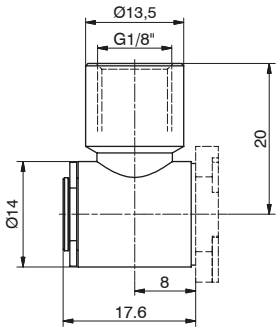

Weight 30 g

551KL1

Connection for multiple function

Coding: 551KUU

Weight 14 g

Cartridge

Coding: 551K©

©	CONNECTIONS
	M1 = G1/8" male straight cartridge
	M2 = G1/4" male straight cartridge
	F1 = G1/8" female straight cartridge

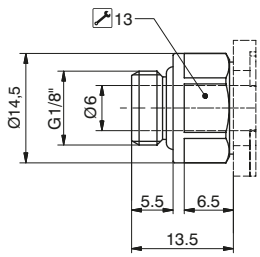

Weight 14 g
G1/8" male straight cartridge

551KM1

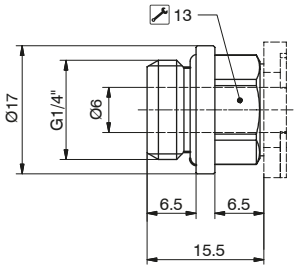

Weight 20 g
G1/4" male straight cartridge

551KM2

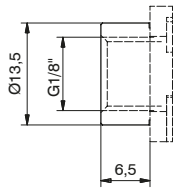

Weight 9 g
G1/8" female straight cartridge

551KF1

Overall dimensions and technical information are provided solely for informative purposes and may be modified without notice

Series 1750-1760

General

This new type of miniaturised pressure regulators are mostly indicated for the use on the secondary level of the pneumatic circuits. Thanks to the contained dimensions are particularly indicated to be used very closely or directly mounted onto the consumption. Three versions are available.

Version rod G1/8" swivel ring with female thread G 1/8" and G 1/4" or push-in fitting for tube Ø4, Ø6 and Ø8

model with body in technopolymer integrated gauge and quick coupling fittings for tube Ø4 and Ø6.

G/1/8" model to be directly mounted onto the valve

Compact design to be directly mounted onto the valves uses standard swivel rings with G1/8" female thread (ref 41218) or quick coupling fittings for tube sizes. It is also possible to supply the regulating shaft without the swivel ring.

Model with body in technopolymer and integrated gauge

is the more complete solution, comprises a movable gauge which enables to check the regulated pressure.

Is manufactured using the same regulating unit as the base model fitted into a technopolymer body on which are inserted two quick coupling cartridges, 4mm or 6mm tube for inlet and outlet connections; two side plates lock the cartridges and gauge in position.

It is possible to join together more than one regulator by means of a dedicated adaptor made of technopolymer which must be inserted in the appropriate slot. (the air must be supplied independently to each regulator.)

Several mounting solutions are available: wall mounting via two mounting holes, on DIN rail using the specific accessories or on panels.

Mounting solutions

G/1/8" model to be directly mounted onto the valve:
Directly mounted onto the valves threaded connections (consumptions)

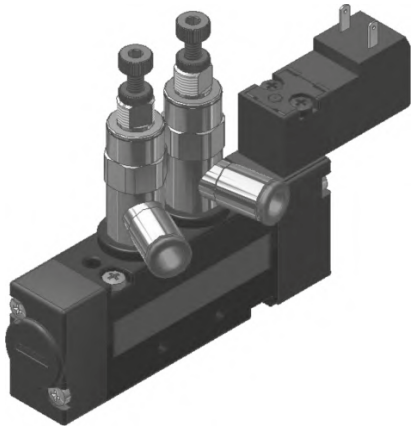

Model with body in technopolymer and integrated gauge:
Panel mounting via the locking nut

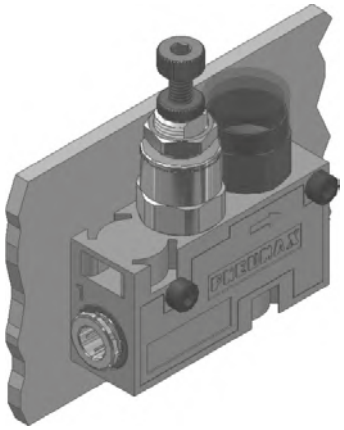

Model with body in technopolymer and integrated gauge:
Wall mounting via the mounting holes on the body

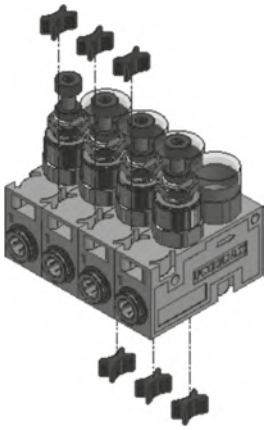

Model with body in technopolymer and integrated gauge:
On DIN rail using the specific accessories

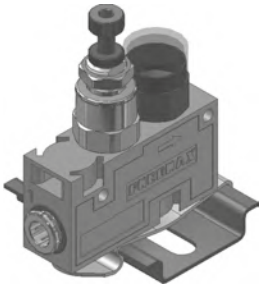

Model with body in technopolymer and integrated gauge:
Panel mounting via the locking nut

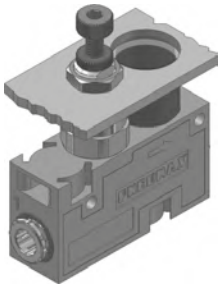

Miniaturised pressure regulators - with technopolymer body

Coding: 17522A.C.G

Construction characteristics

- Regulating cartridge = Nickel-plated brass
- Regulator body = Technopolymer
- Seals = Oil resistant nitrilic rubber (NBR)
- Plunger spring = AISI 302
- Regulating spring = Spring suitable steel
- Plunger = Oil resistant nitrilic rubber (NBR)
- Other parts = Brass

Operational characteristics	
Max working pressure (bar)	10
Temperature °C	-5 ÷ +50
Flow rate at 6 bar with Δp=1 (Nl/min)	120
Working ports size	Ø4-Ø6
Inlet connections sizes	Ø4-Ø6
Mounting positioning	Any

C	CONNECTIONS
	4 = Tube Ø4
	6 = Tube Ø6
G	REGULATION RANGE
	C = 0÷8bar
	B = 0÷4bar
	A = 0÷2bar

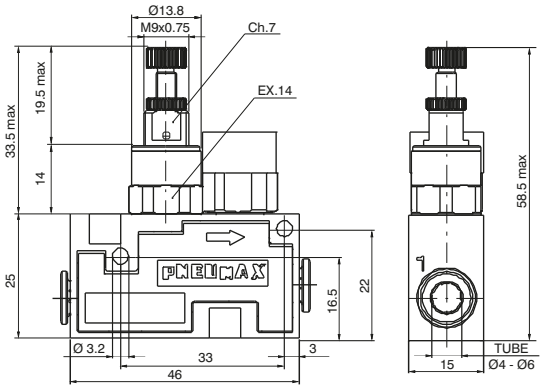

Miniaturised pressure regulators, rod G1/8"

Coding: 17602A.A.G

Construction characteristics

- Regulating cartridge = Nickel-plated brass
- Regulator body = Nickel-plated brass
- Seals = Oil resistant nitrilic rubber (NBR)
- Plunger spring = AISI 302
- Regulating spring = Spring suitable steel
- Plunger = Oil resistant nitrilic rubber (NBR)
- Other parts = Brass

Operational characteristics	
Max working pressure (bar)	10
Temperature °C	-5 ÷ +50
Flow rate at 6 bar with Δp=1 (Nl/min)	120
Working ports size	G1/8"
Inlet connections sizes	G1/8"-Ø4-Ø6-Ø8
Mounting positioning	Any

A	SWIVEL RING
	0 = None
	1 = Swivel ring G1/8" female
	4 = Tube Ø4
	6 = Tube Ø6
	8 = Tube Ø8
G	REGULATION RANGE
	C = 0÷8bar
	B = 0÷4bar
	A = 0÷2bar

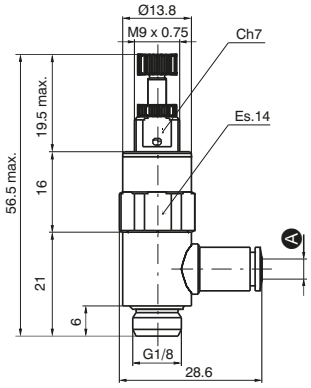

Miniaturised pressure regulators, rod G1/4"

Coding: 17602B.A.G

Construction characteristics

- Regulating cartridge = Nickel-plated brass
- Regulator body = Nickel-plated brass
- Seals = Oil resistant nitrilic rubber (NBR)
- Plunger spring = AISI 302
- Regulating spring = Spring suitable steel
- Plunger = Oil resistant nitrilic rubber (NBR)
- Other parts = Brass

Operational characteristics	
Max working pressure (bar)	10
Temperature °C	-5 ÷ +50
Flow rate at 6 bar with Δp=1 (Nl/min)	120
Working ports size	G1/4"
Inlet connections sizes	G1/4"-Ø4-Ø6-Ø8
Mounting positioning	Any

A	SWIVEL RING
	0 = None
	1 = Swivel ring G1/4" female
	6 = Tube Ø6
	8 = Tube Ø8
G	REGULATION RANGE
	C = 0÷8bar
	B = 0÷4bar
	A = 0÷2bar

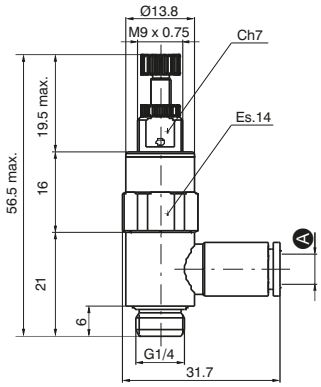

Overall dimensions and technical information are provided solely for informative purposes and may be modified without notice

Series Mini-RAP

Technical data

Working temperature: -20°C +70°C
Maximum working pressure: 10 bar
Fluid: Compressed air (others fluids on requests)
Nichel-plated brass body, Brass grip, Silicone free NBR gaskets
Thread: Cylindrical with O-Ring
Maximum fixing torque for fittings
Thread: M3: 0,4 Nm
Thread: M6 and M6x0,75: 1,3 Nm

Main characteristics

1. Can be inserted and extracted with one hand
2. Suitable for tube Rilsan, Polyurethane, Nylon, Polyethylene
3. Supercompact
4. Extremely lightweight yet sturdy
5. O-Ring provided with his own seat to ensure seal with polished surface
6. Suitable for vacuum applicatio

RDR Straight male adaptor (parallel)

Coding: RDR3.40-MH05

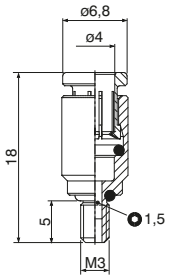

RDR3.40-MH05

RDR Straight male adaptor (parallel)

Coding: RDR6.40-Ⓥ

Ⓥ	VERSION		
	MH12 H=12mm	=	M6,
	FH12 =	M6x0,75, H=12mm	

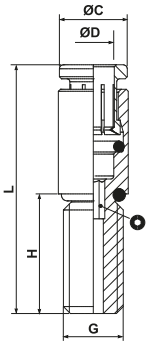

CODE	ØD	G	ØC	H	L	O
RDR6.40-MH12	4	M6	6,8	12	25	2
RDR6.40-FH12	4	M6x0,75	6,8	12	25	2

RDR6.40-Ⓥ

RGR Complete single banjo with stem

Coding: RGR3.40-MH05

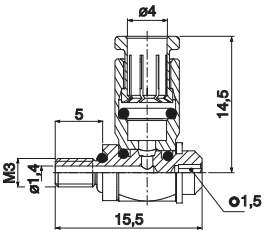

RGR3.40-MH05

RGR Complete single banjo with stem

Coding: RGR6.40-Ⓥ

Ⓥ	VERSION		
	MH12 H=12mm	=	M6,
	FH12 =	M6x0,75, H=12mm	

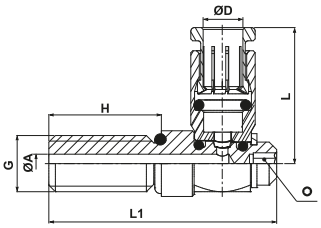

CODE	ØD	G	ØA	H	L1	L	O
RGR6.40-MH12	4	M6	2	12	24,3	14,5	2
RGR6.40-FH12	4	M6x0,75	2	12	24,3	14,5	2

RGR6.40-Ⓥ

Overall dimensions and technical information are provided solely for informative purposes and may be modified without notice

Series 2700

General

The 2700 Series of solenoid operated valves have been designed in accordance with ISO 15407, a standard for both pneumatic and electrical layout.
This series of valves have a 27mm valve body width and a nominal flow rate of 1000 Nl/Min.
The solenoid valves are mounted upon a modular sub-base with G1/4" pneumatic connections and built in electrical connection.
Another feature of the 2700 series is that it can be equipped with the serial bus modules currently being used with our Optyma-T valve series, thus offering an extremely flexible product that can be integrated with standard communication protocols (CANopen®, PROFIBUS DP, DeviceNet, EtherNet/IP, PROFINET IO RT/IRT, EtherCAT®, Powerlink and Modbus/TCP).
In addition to the serial bus modules, the valves manifolds can also be used with either a 25 or 37 pin D-SUB connectors offering control of up to a maximum of 32 electrical signals.

"Shifting time of pneumatic directional control valves or moving parts, logic devices were measured in accordance to ISO 12238:2001, Pneumatic fluid power-Directional control valves-Measurement of shifting time"

Main characteristics

Integrated and optimized electrical connection system.
IP65 protection degree.
Only one 26mm size.
Monostable and bistable solenoid valves with the same size dimensions.
G1/4" quick coupling connections.
Easy and fast manifold assembling.

Construction characteristics

Body	Aluminium
Operators	Technopolymer
Spacers	HNBR 75-80 Shore A
Spools	Aluminium
Springs	AISI 302 stainless steel
Pistons	Technopolymer
Piston seals	NBR

Functions

SV 5/2 MONOSTABLE SOLENOID-SPRING
SV 5/2 MONOSTABLE SOLENOID-DIFFERENTIAL
SV 5/2 BISTABLE SOLENOID-SOLENOID
SV 5/3 C.C. SOLENOID-SOLENOID
SV 2x3/2 N.C.-N.C. (=5/3 O.C.) SOLENOID-SOLENOID
SV 2x3/2 N.O.-N.O. (=5/3 P.C.) SOLENOID-SOLENOID
SV 2x3/2 N.C.-N.O. SOLENOID-SOLENOID

Technical characteristics

Voltage	24 VDC ±10% PNP
Pilot consumption	1 Watt - 2,3Watt
Valve working pressure [1]	from vacuum up to 10 bar
Operating temperature	-5°C +50°C
Life (standard operating conditions)	50000000
Fluid	Filtered air. No lubrication needed, if applied it shall be continuous

Solenoid - Spring

Coding: 2741.52.00.Ⓟ.Ⓣ

Operational characteristics	
Fluid	Filtered air. No lubrication needed, if applied it shall be continuous
Working pressure (bar)	From vacuum to 10
Minimum piloting pressure (bar)	2
Temperature °C	-5 ÷ +50
Flow rate at 6 bar with Δp=1 (Nl/min)	1000
Responce time according to ISO 12238, activation time (ms)	20
Responce time according to ISO 12238, deactivation time (ms)	38

Shifting time of pneumatic directional control valves or moving parts, logic devices were measured in accordance to ISO 12238:2001

Ⓟ	PILOTING
	39 = Self feeding
	29 = External feeding
Ⓣ	VOLTAGE
	01 = 12V DC
	02 = 24V DC
	08 = 24V DC 1 Watt

SHORT FUNCTION (Self feeding) "AA"
SHORT FUNCTION (External feeding) "AE"
Weight 280 g

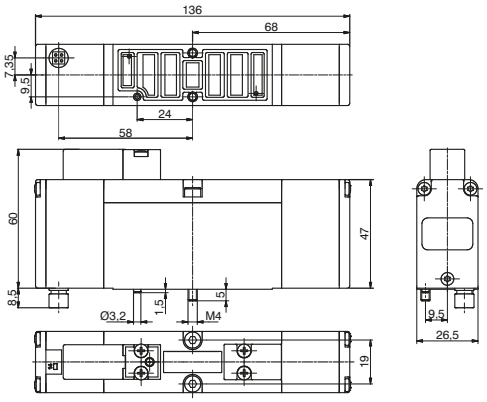

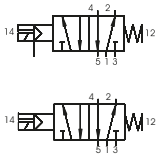

The "Activations time" values, are valid only for the 2,3W versions

Solenoid-Differential

Coding: 2741.52.00.Ⓟ.Ⓣ

Operational characteristics	
Fluid	Filtered air. No lubrication needed, if applied it shall be continuous
Working pressure (bar)	From vacuum to 10
Minimum piloting pressure (bar)	2
Temperature °C	-5 ÷ +50
Flow rate at 6 bar with Δp=1 (Nl/min)	1000
Responce time according to ISO 12238, activation time (ms)	20
Responce time according to ISO 12238, deactivation time (ms)	38

Shifting time of pneumatic directional control valves or moving parts, logic devices were measured in accordance to ISO 12238:2001

Ⓟ	PILOTING
	36 = Self feeding
	26 = External feeding
Ⓣ	VOLTAGE
	01 = 12V DC
	02 = 24V DC
	08 = 24V DC 1 Watt

SHORT FUNCTION (Self feeding) "BA"
SHORT FUNCTION (External feeding) "BE"
Weight 280 g

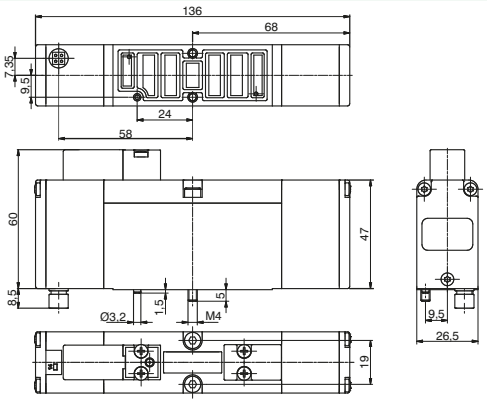

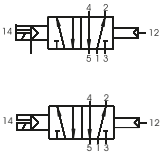

The "Activations time" values, are valid only for the 2,3W versions

Solenoid-Solenoid 5/2

Coding: 2741.52.00.Ⓟ.Ⓣ

Operational characteristics	
Fluid	Filtered air. No lubrication needed, if applied it shall be continuous
Working pressure (bar)	From vacuum to 10
Minimum piloting pressure (bar)	2
Temperature °C	-5 ÷ +50
Flow rate at 6 bar with Δp=1 (Nl/min)	1000
Responce time according to ISO 12238, activation time (ms)	12
Responce time according to ISO 12238, deactivation time (ms)	14

Shifting time of pneumatic directional control valves or moving parts, logic devices were measured in accordance to ISO 12238:2001

Ⓟ	PILOTING
	35 = Self feeding
	24 = External feeding
Ⓣ	VOLTAGE
	01 = 12V DC
	02 = 24V DC
	08 = 24V DC 1 Watt

SHORT FUNCTION (Self feeding) "CA"
SHORT FUNCTION (External feeding) "CE"
Weight 310 g

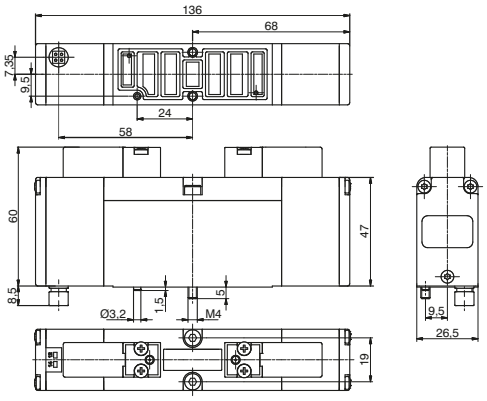

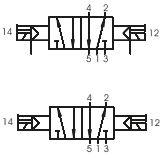

The "Activations time" values, are valid only for the 2,3W versions

Overall dimensions and technical information are provided solely for informative purposes and may be modified without notice

Solenoid-Solenoid 5/3

Coding: 2741.53.31.Ⓟ.Ⓣ

Operational characteristics	
Fluid	Filtered air. No lubrication needed, if applied it shall be continuous
Working pressure (bar)	From vacuum to 10
Minimum piloting pressure (bar)	3
Temperature °C	-5 ÷ +50
Flow rate at 6 bar with Δp=1 (Nl/min)	660
Responce time according to ISO 12238, activation time (ms)	12
Responce time according to ISO 12238, deactivation time (ms)	60

Shifting time of pneumatic directional control valves or moving parts, logic devices were measured in accordance to ISO 12238:2001

Ⓟ	PILOTING
	35 = Self feeding
	24 = External feeding
Ⓣ	VOLTAGE
	01 = 12V DC
	02 = 24V DC
	08 = 24V DC 1 Watt

SHORT FUNCTION (Self feeding) "EA"
SHORT FUNCTION (External feeding) "EE"

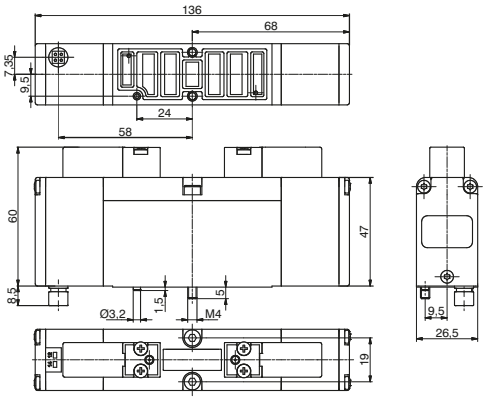

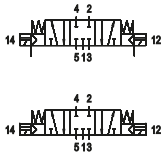

Weight 310 g
The "Activations time" values, are valid only for the 2,3W versions

Solenoid-Solenoid 2x3/2 (Self feeding / External feeding)

Coding: 2741.62.Ⓕ.Ⓟ.Ⓣ

Operational characteristics	
Fluid	Filtered air. No lubrication needed, if applied it shall be continuous
Working pressure (bar)	From vacuum to 10
Minimum piloting pressure (bar)	≥2+(0,3xP.alim.)
Temperature °C	-5 ÷ +50
Flow rate at 6 bar with Δp=1 (Nl/min)	550
Responce time according to ISO 12238, activation time (ms)	15 (Self feeding) 12 (External feeding)
Responce time according to ISO 12238, deactivation time (ms)	15 (Self feeding) 60 (External feeding)

Shifting time of pneumatic directional control valves or moving parts, logic devices were measured in accordance to ISO 12238:2001

Ⓕ	FUNCTION
	44 = 2 Coils 3/2 NC
	45 = 1 Coil 3/2 NC (14) + 1 Coil 3/2 NO (12)
	55 = 2 Coils 3/2 NO
	54 = 1 Coil 3/2 NO (14) + 1 Coil 3/2 NC (12)
Ⓟ	PILOTING
	35 = Self feeding
	24 = External feeding
Ⓣ	VOLTAGE
	01 = 12V DC
	02 = 24V DC
	08 = 24V DC 1 Watt

SHORT FUNCTION (Self feeding):
2 3/2 NC="FA"
1 3/2 NC (14) + 1 3/2 NA (12)="HA"
2 3/2 NA="GA"
1 3/2 NA (14) + 1 3/2 NC (12)="IA"
SHORT FUNCTION (External feeding):
2 3/2 NC="FE"
1 3/2 NC (14) + 1 3/2 NA (12)="HE"
2 3/2 NA="GE"
1 3/2 NA (14) + 1 3/2 NC (12)="IE"

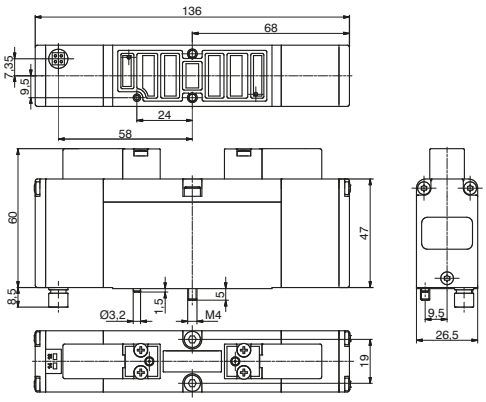

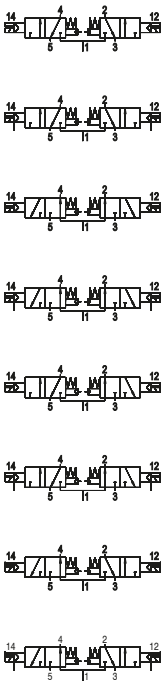

Weight 310 g
The "Activations time" values, are valid only for the 2,3W versions
"Example: If inlet pressure is set at 5bar then pilot pressure must be at least
Pp=2+(0.3*5)=3,5bar"

Right Endplates

Coding: 2740.02.Ⓒ

Operational characteristics	
Fluid	Filtered air. No lubrication needed, if applied it shall be continuous
Working pressure (bar)	From vacuum to 10
Temperature °C	-5 ÷ +50

	ELECTRICAL CONNECTION		
Ⓒ	**37P** PNP	=	Connectors 37 poles
	25P PNP	=	Connectors 25 poles
	37N NPN	=	Connectors 37 poles
	25N NPN	=	Connectors 25 poles

Weight 600 g

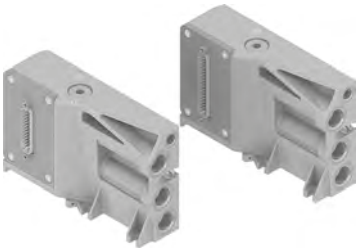

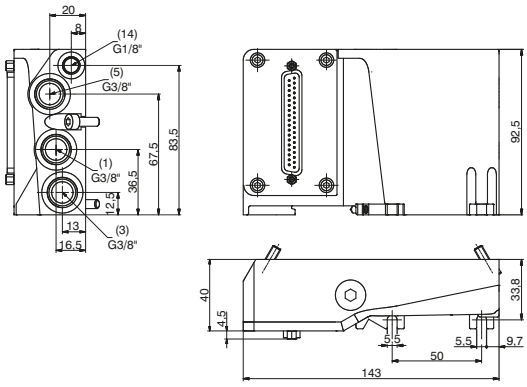

Left Endplates

Coding: 2740.03.Ⓒ

Operational characteristics	
Fluid	Filtered air. No lubrication needed, if applied it shall be continuous
Working pressure (bar)	From vacuum to 10
Temperature °C	-5 ÷ +50

	ELECTRICAL CONNECTION		
Ⓒ	**00**	=	Electrical connection
	25P	=	Connectors 25 poles

Weight 600 g

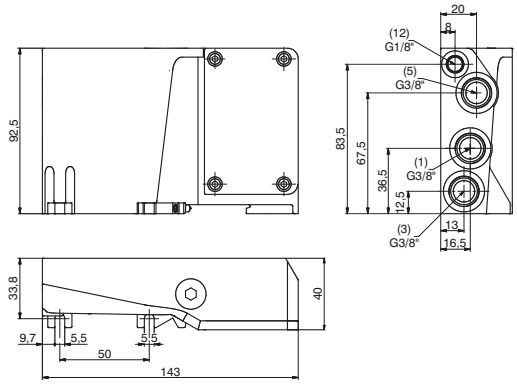

Modular base

Coding: 2740.01Ⓥ

Operational characteristics	
Fluid	Filtered air. No lubrication needed, if applied it shall be continuous
Working pressure (bar)	From vacuum to 10
Temperature °C	-5 ÷ +50

	VERSION
Ⓥ	**M** = for Monostable SV
	B = for Bistable SV

Weight 330 g

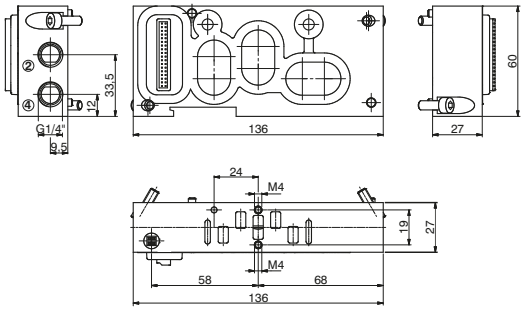

Overall dimensions and technical information are provided solely for informative purposes and may be modified without notice

Closing plate

Coding: 2740.00

Weight 100 g

Operational characteristics	
Fluid	Filtered air. No lubrication needed, if applied it shall be continuous
Working pressure (bar)	From vacuum to 10
Temperature °C	-5 ÷ +50

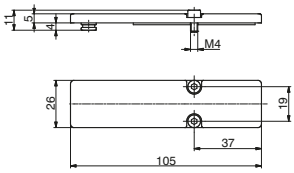

Diaphragm plug

Coding: 2740.17

Weight 65 g

Cable complete with connector, 25 Poles IP65

Coding: 2300.25.Ⓛ.Ⓒ

Ⓛ	CABLE LENGTH
	03 = 3 meters
	05 = 5 meters
	10 = 10 meters
Ⓕ	FUNCTION
	31 = Closed centres
	32 = Open centres
	33 = Pressured centres

Cable complete with connector, 37 Poles IP65

Coding: 2400.37.Ⓛ.Ⓒ

Ⓛ	CABLE LENGTH
	03 = 3 meters
	05 = 5 meters
	10 = 10 meters
Ⓕ	FUNCTION
	31 = Closed centres
	32 = Open centres
	33 = Pressured centres

Cable complete with connector, 25 Poles IP65

Coding: 2400.25.Ⓛ.25

Ⓛ	CABLE LENGTH
	03 = 3 meters
	05 = 5 meters
	10 = 10 meters

The electrical connection is achieved by a 37 pin connector and can manage up to 32 solenoid pilots.
It is also possible use a 25 sub-D pin connector and, in this case, it is possible to manage a maximum of 22 outputs.
The management and distribution of the electrical signals between each valve is obtained thanks to an electrical connector which receives the signals from the previous module, uses one, two or none depending on the type, and carries forward to the next module the remaining.
Bistable valves, 5/3 and 2x3/2 valves which have two solenoid pilots built in, use two signals; the first is directed to the pilot side 14 the second to the pilot side 12. Modular bases can be fitted with two type of electrical connector: the monostable version uses only one signal (connected to the pilot side 14) and carries forward the remaining, the bistable version which always uses two signals.
This solution allows the modification of the manifold (replacement of monostable valves without bistable for example) without having to reset the PLC output layout.
On other hand this solution limits the maximum number of valves to 16 when it is used a 37 pin connector or 11 when it is used a 25 pin connector.
Intermediate supply/exhaust module uses an electrical connector directly forwarding signals to the next one without any kind of modification.
This allows the use of intermediate modules in any position of the manifold.
All the electrical signals that have not been used on the manifold can be used placing at the end of the manifold the end plate complete with the 25 sub-D female connector.
The number of available signals depends of the connector used to the type of the left end plate and by the total signals used along the manifold:

37 pin connector	nr of output = 32 – (total of used signals)
25 pin connector	nr of output = 22 – (total of used signals)

Following we show some examples of possible combination and the relative pin assignment.

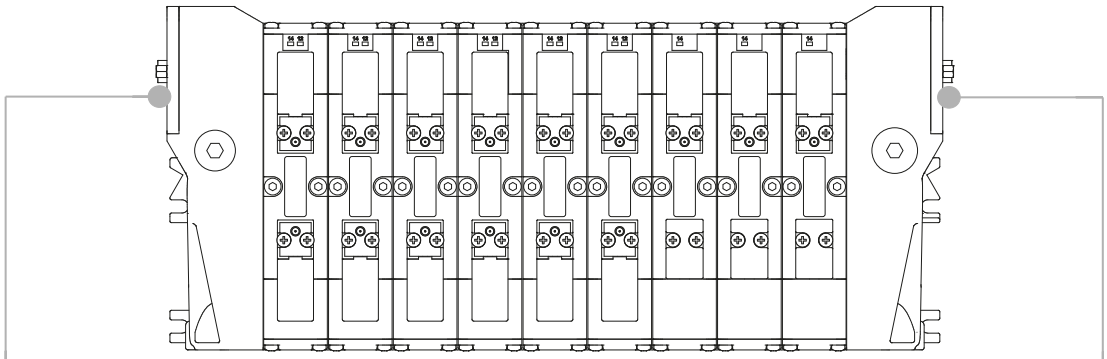

IN-LET ELECTRIC CONNECTIONS

SUB-D 37 POLE
MALE CONNECTOR

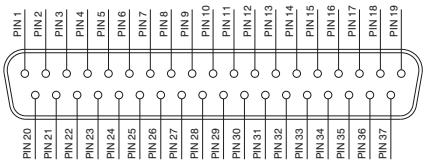

1 - 32 = SOLENOID VALVES SIGNAL
33 - 35 = GND
36 - 37 = THROUGH LINE

SUB-D 25 POLE
MALE CONNECTOR

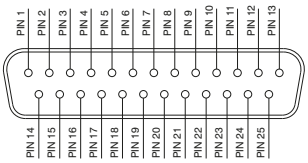

1 - 22 = SOLENOID VALVES SIGNAL
23 - 24 = GND
25 = THROUGH LINE

OUTLET ELECTRIC CONNECTIONS (IF PRESENT)

SUB-D 25 POLE
FEMALE CONNECTOR

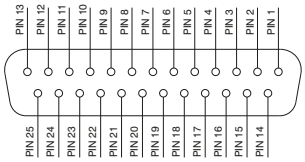

1 - 22 = SOLENOID VALVES SIGNAL
23 - 24 = GND
25 = THROUGH

Overall dimensions and technical information are provided solely for informative purposes and may be modified without notice

37 PIN Connector correspondence for valves assembled on mixed bases

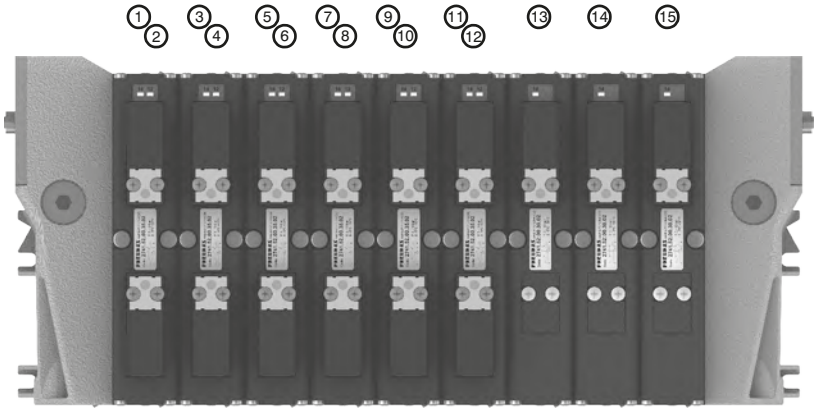

PIN 1 = PILOT 14 SV POS.1
PIN 2 = PILOT 12 SV POS.1
PIN 3 = PILOT 14 SV POS.2
PIN 4 = PILOT 12 SV POS.2
PIN 5 = PILOT 14 SV POS.3
PIN 6 = PILOT 12 SV POS.3
PIN 7 = PILOT 14 SV POS.4
PIN 8 = PILOT 12 SV POS.4
PIN 9 = PILOT 14 SV POS.5
PIN 10 = PILOT 12 SV POS.5
PIN 11 = PILOT 14 SV POS.6
PIN 12 = PILOT 12 SV POS.6
PIN 13 = PILOT 14 SV POS.7
PIN 14 = PILOT 14 SV POS.8
PIN 15 = PILOT 14 SV POS.9

POS.	1	2	3	4	5	6	7	8	9

37 PIN Connector correspondence for manifold mounted on bases for bistable valves

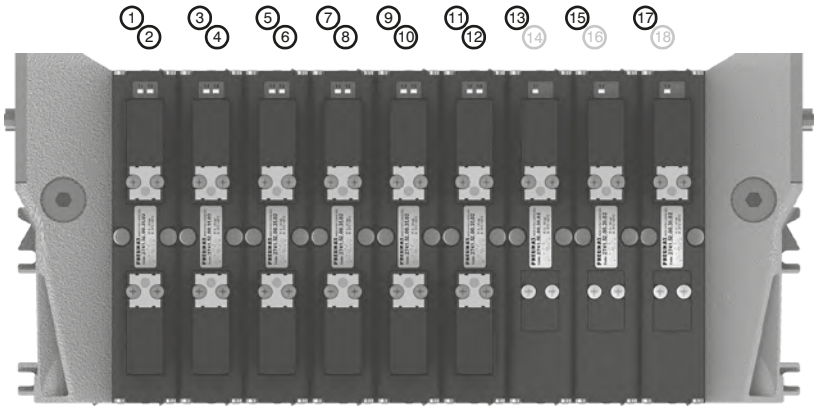

PIN 1 = PILOT 14 SV POS.1
PIN 2 = PILOT 12 SV POS.1
PIN 3 = PILOT 14 SV POS.2
PIN 4 = PILOT 12 SV POS.2
PIN 5 = PILOT 14 SV POS.3
PIN 6 = PILOT 12 SV POS.3
PIN 7 = PILOT 14 SV POS.4
PIN 8 = PILOT 12 SV POS.4
PIN 9 = PILOT 14 SV POS.5
PIN 10 = PILOT 12 SV POS.5
PIN 11 = PILOT 14 SV POS.6
PIN 12 = PILOT 12 SV POS.6
PIN 13 = PILOT 14 SV POS.7
PIN 14 = NOT CONNECTED
PIN 15 = PILOT 14 SV POS.8
PIN 16 = NOT CONNECTED
PIN 17 = PILOT 14 SV POS.9
PIN 18 = NOT CONNECTED

POS.	1	2	3	4	5	6	7	8	9

37 PIN Connector correspondence for manifold for 32 position manifold with monostable valves on base

37P 1 2 3 ... 30 31 32

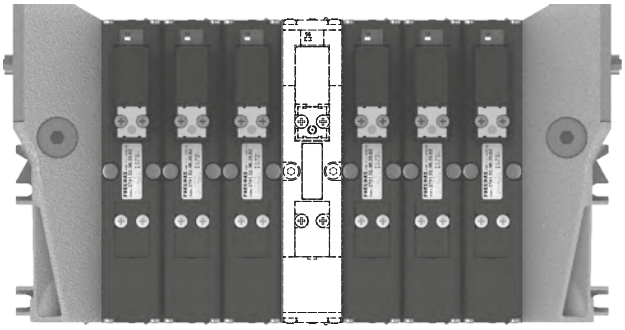

POS.	1	2	3	...	30	31	32

25P 1 2 3 ... 20 21 22

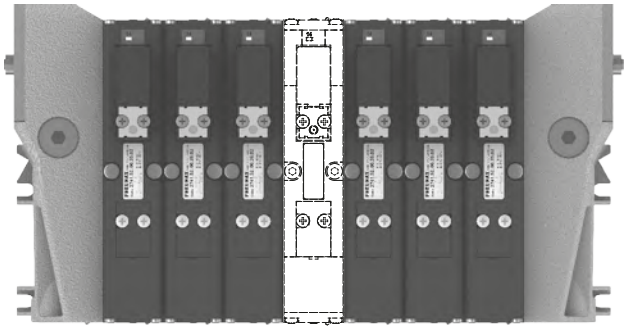

POS.	1	2	3	...	20	21	22

General :

Using the 2740.03.25P output terminal it is possible to make any electrical signals not used by valves available on a 25 sub-D female connector at the right end of the manifold.
It is possible to then join a multi-core cable to link to the next manifold, or connect directly to one or two I/O modules.
The I/O modules can accept input or output signals, depending upon what is connected.

Ordering code

2540.08T

Please note: If the manifold is connected by a multi-core connection, each connection can be used as either an input or an output, while if the manifold is connected to a serial node the connections can only be used as an output.

It is possible to connect the manifold to up to two I/O modules.

Each I/O module includes 8 diagnostic LEDs which indicate the presence of an Input / Output signal for each connector.

Please note: For an LED to function, a signal of at least +15VDC must be present on pin 4 of the connector. If this signal is lower, the LED will not light, this does not compromise the normal Input / Output function of the unit.

Overall dimensions and I/O layout :

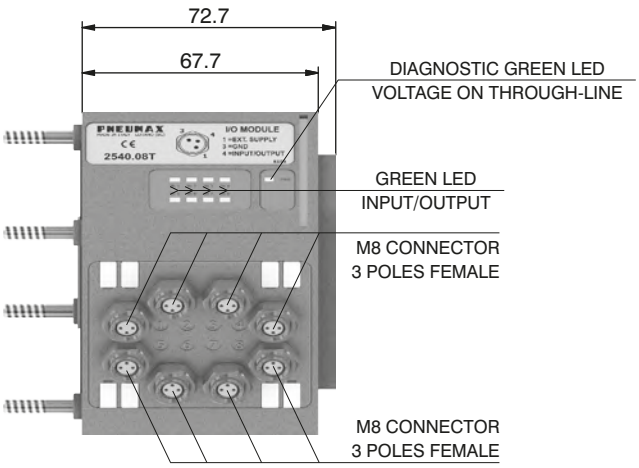

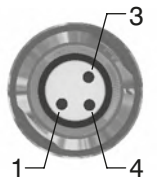

PIN	DESCRIPTION
1	+24 VDC
4	INPUT/OUTPUT
3	GND

Input features:

Each connection can accept either two wire (switches, magnetic switches, pressure switches, etc.) or three wire connections (photocells, electronic end of stroke sensors, etc.) If +24VDC is required on at Pin 1 of each connector, it is possible to provide this via the through-line pin of the multi-pole connector.
I.E :
Pin 25 of the 25 pin multi-pole connector (code 2740.02.25P or 2740.12.25P)
Pin 36-37 of the 37 pin multi-pole connector (code 2740.02.37P or 2740.12.37P)

Output features:

Attention: The output connections are not protected against short-circuit. Please pay attention when wiring (avoid Pin 4 being connected to Pin 3 or Pin 1).

	Model	2540.08T
	Case	Reinforced technopolymer
General characteristics	I/O Connector	M8 connector 3 poles female (IEC 60947-5-2)
	PIN 1 voltage (connector used as Input)	By the user
	PIN 4 voltage diagnosis	Green Led
	Node consumption (Outlets excluded)	7mA per each LED with 24 VDC signal
	Outlets voltage	+23,3 VDC (serial) /by the user (multipolar)
	Input voltage	Depend by the using
	Maximum outlet current	100 mA (serial) / 400 mA (multipolar)
	Maximum Input/Output	8 per module
	Multiconnector max. Current	100 mA
	Connections to manifold	Direct connection to 25 poles connector
	Maximum n. of moduls	2
	Protection degree	IP65 when assembled
	Ambient temperature	from -0° to +50° C

Overall dimensions and technical information are provided solely for informative purposes and may be modified without notice

CORRESPONDENCE BETWEEN MULTI-POLE SIGNAL AND CONNECTOR

SUB-D TYPE 37 POLE MALE CONNECTOR

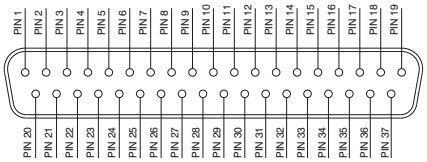

1 - 32 = SIGNALS
33 - 35 = GND
36 - 37 = THROUGH LINE

SUB-D TYPE 25 POLE MALE CONNECTOR

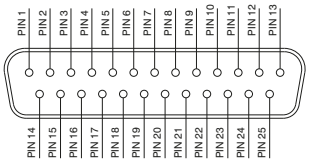

1 - 22 = SIGNALS
23 - 24 = GND
25 = THROUGH LINE

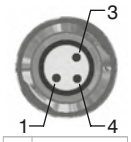

PIN	DESCRIPTION
1	THROUGH LINE
4	SIGNAL
3	GND

Connection modes:

The I/O module changes it is operation depending on the way the manifold is controlled. There are two possible modes:

A) Control via multi-pole connection
B) Control via fieldbus

In order to use the I/O module, the correct right hand endplate with 25 pole female outlet connector must be used.
(Code 2740.03.25P).

A) Control via multi-pole :

M8 connector used as Input:

Attention: Voltage applied to each connector is passed to multi-pole connector pin.

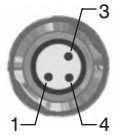

PIN	DESCRIPTION
1	THROUGH LINE
4	SIGNAL
3	GND

M8 connector used as Output:

Output voltage will the same as is applied at the multi-pole connector pin.
The maximum output current depends upon the power unit used, but we recommend no more than 250mA.

Attention: Since every cable has a degree of resistance, there will always be a voltage drop depending on the cable's length, sectional area and the current.

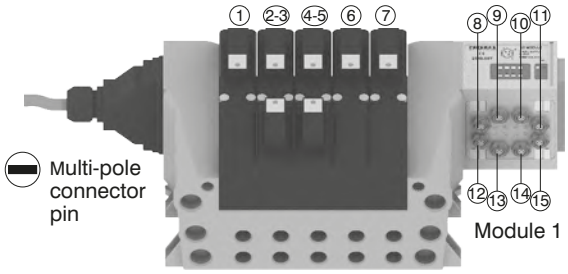

Attention:
Only one more I/O module can be added.

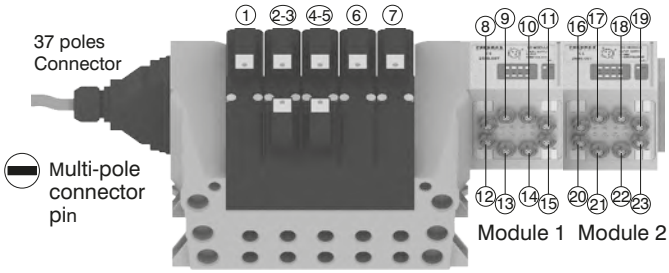

Attention:
No more additions are possible

Attention : 2700 solenoid valve manifolds permit up to 22 electrical signals that are not used by manifolds to be made available: these signals can be managed by another manifold and / or by I/O modules.
The I/O module will manage these unused signals. Connections that are not managing useful signals will remain unconnected.

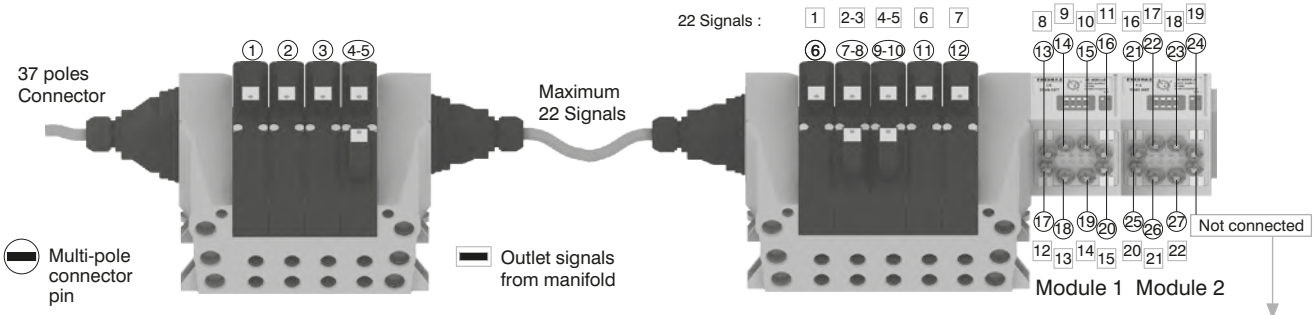

Please note: this example considers a 37 pin multi-pole connector.
The same configuration managed by a 25 pin multi-pole connector will stop at number 22 of multi-pole connector and at number 17 of the manifold. 22 17

Attention:
Signal Not connected
GND Connected
Through line Connected

Please note: 2700 solenoid valve manifolds manage up to 32 signals. If the manifold uses more than 24 signals the I/O module will manage only the remainder. Connections that are not managing useful signals will remain unconnected.

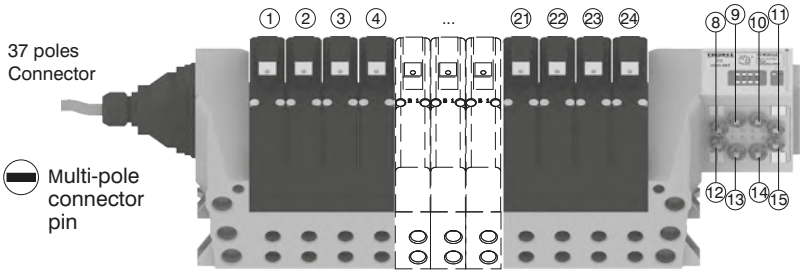

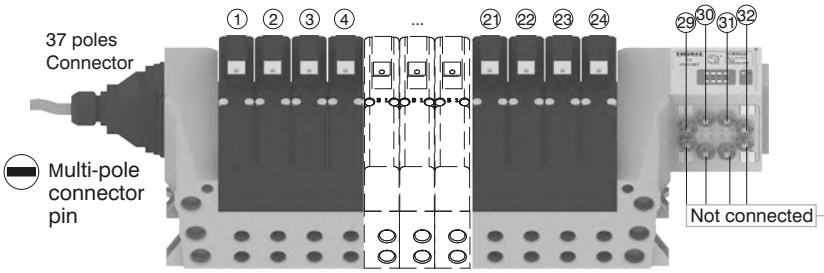

Attention:
Signal Not connected
GND Connected
Through line Connected

B) Control via fieldbus:

With this kind of control the I/O module can only be used as an output. Pin 1 of each connector is not connected. The output voltage will be 0.7V lower than that applied to Pin 4 of the connector.
The maximum output current for each output is 100mA. The correspondence between control byte and each single output depends on how many electrical signals are used by the manifold and by the relative position of the I/O module.

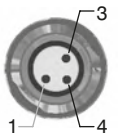

PIN	DESCRIPTION
1	NOT CONNECTED
4	SIGNAL
3	GND

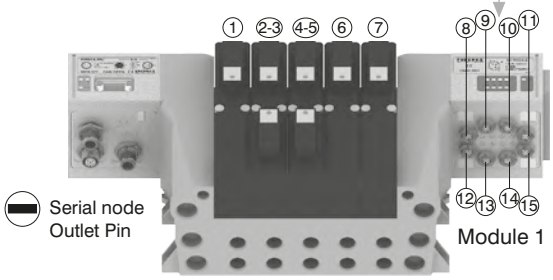

Attention:
Output only

Attention:
Only one more
I/O module
can be added.

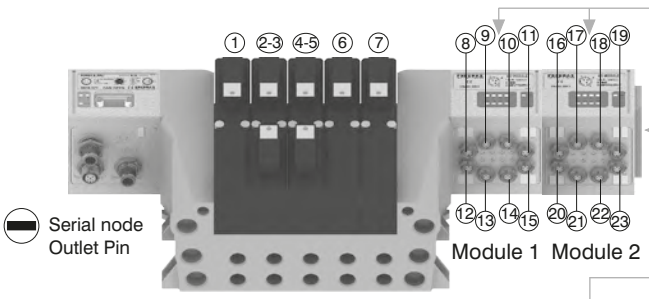

Attention:
Output only

Attention:
No more additions
are possible

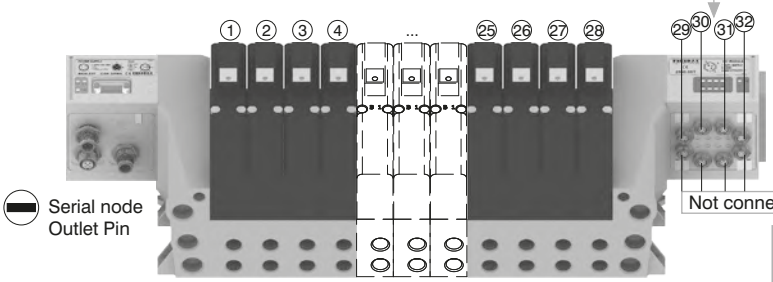

Attention:
Output only

Attention:
Signal Not connected
GND Connected

Please note: I/O modules don't allow to connect any additional valves manifold after them.

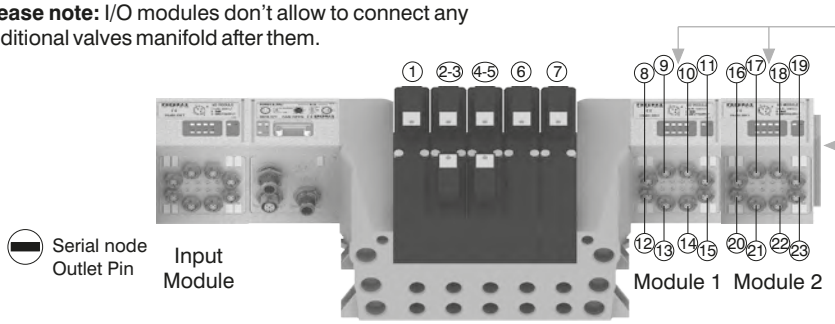

Attention:
Output only

Attention:
No more additions
are possible

Overall dimensions and technical information are provided solely for informative purposes and may be modified without notice

From the top

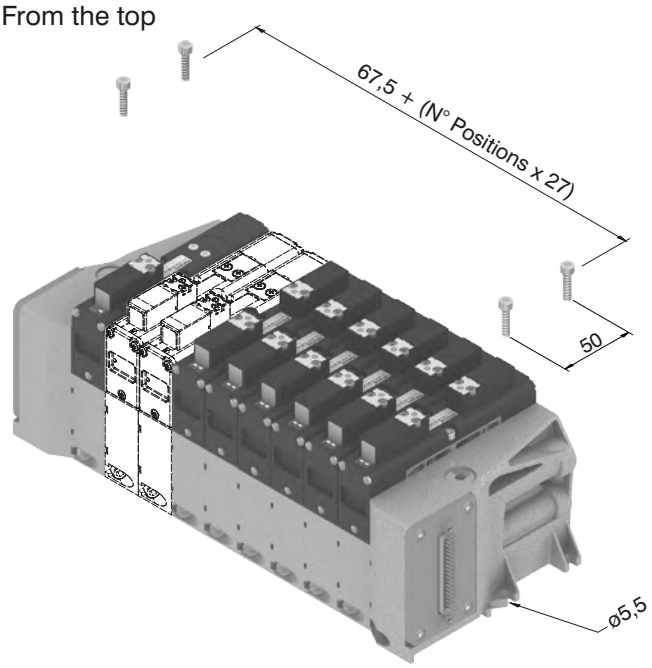

DIN rail fixing

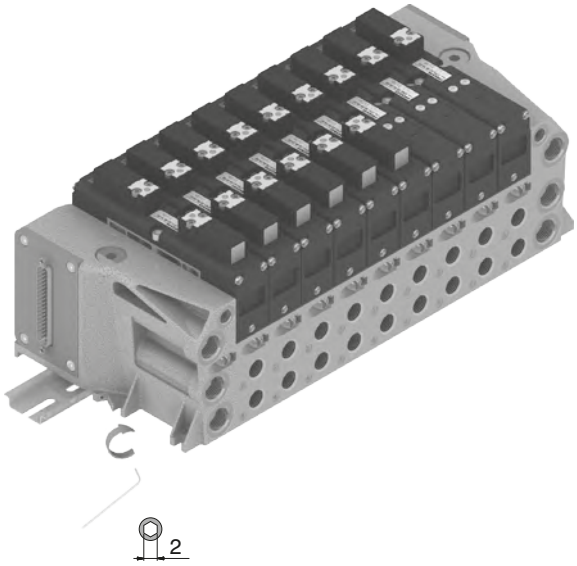

Maximum possible size according to valves seats

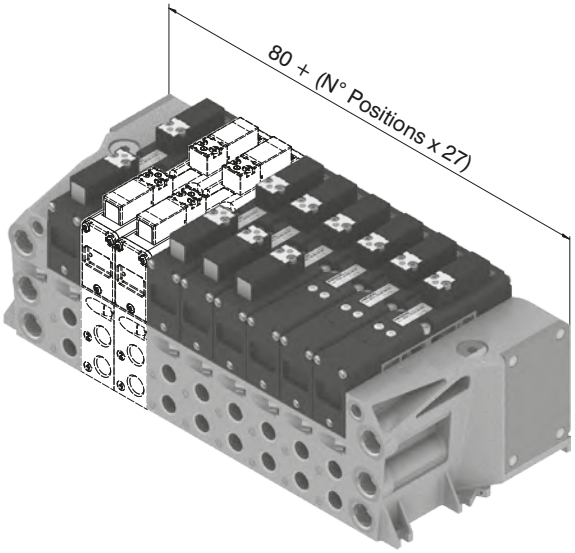

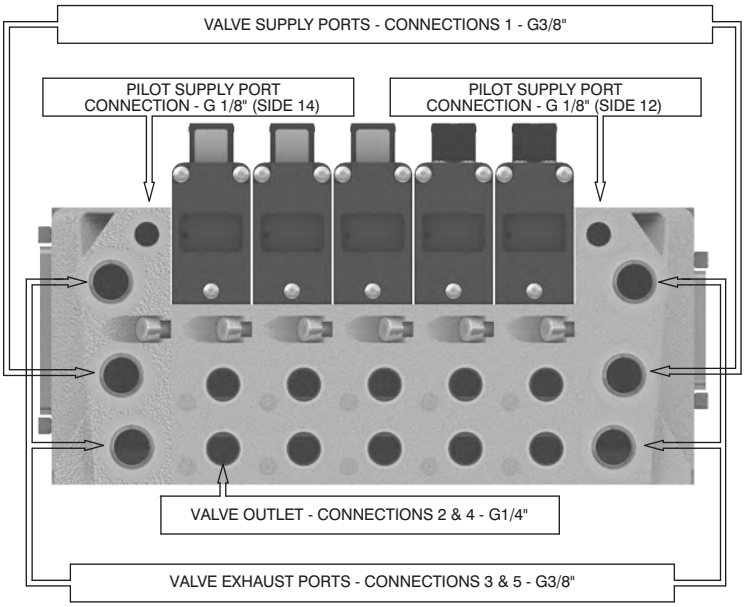

Manifold Layout configuration

LEFT ENDPLATE

E2 = 25 poles 2,3 W
E3 = 37 poles 2,3 W
E4 = 25 poles 1W
E5 = 37 poles 1W

RIGHT ENDPLATE

U0 = Closed
U2 = 25 Poles

MULTIPOINT CONNECTION

MP = PNP 24 V DC
MN = NPN 24 V DC

I/O MODULE

M8
(Requires 25 poles right endplate)

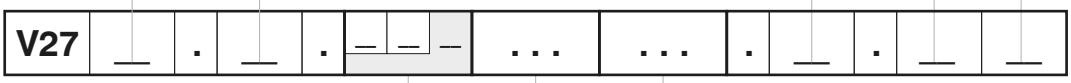

MODUL CONFIGURATION

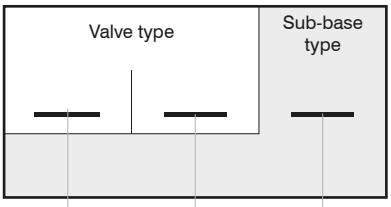

ACCESSORIES CONFIGURATION

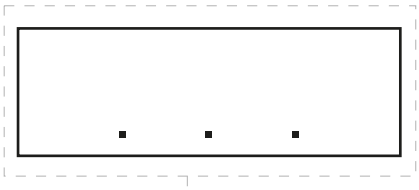

SUB-BASE TYPE

1 = Base type 1 for Monostable
(1 electrical signal occupied)
2 = Base type 2 for Bistable
(2 electrical signals occupied)

ACCESSORIES

X = Diaphragm plug on pipe 1
Y = Diaphragm plug on pipe 3
Z = Diaphragm plug on pipe 5
XY = Diaphragm plug on pipe 1 & 3
ZX = Diaphragm plug on pipe 5 & 1
ZY = Diaphragm plug on pipe 5 & 3
ZXY = Diaphragm plug on pipe 5, 1 & 3

VALVE TYPE:

A = Self-feeding
E = External feeding

SHORT CODE FUNCTION / CONNECTION :

A= 5/2 SOLENOID - SPRING
B= 5/2 SOLENOIS - DIFFERENTIAL
C= 5/2 SOLENOID - SOLENOID
E= 5/3 CC SOLENOID -SOLENOID
F= 2x3/2 NC-NC (= 5/3 OC) SOLENOID -SOLENOID
G= 2x3/2 NO-NO (= 5/3 PC) SOLENOID -SOLENOID
H= 2x3/2 NC-NO SOLENOID -SOLENOID
I= 2x3/2 NO-NC SOLENOID -SOLENOID
T= FREE VALVE SPACE PLUG

NOTE:
While configuring the manifold always be careful that the maximum number of electrical signals available is:
32 when an input 37 poles endplate is used.
22 when an input 25 poles endplate is used.
The use of monostable valve mounted on a base type 2 (2 electrical signals occupied) causes the loss of one electric signal.
In this case the monostable valve can be replaced by a bistable valve. The diaphragms plugs are used to intercept the conduits 1,3 & 5 of the base. If it is necessary to interrupt more than one conduit in the same time then put in line the letters which identifies the position (for exemple : regarding the 3 & 5 conduits, put the Y & Z letters).
Should one or more conduits be cut more than one time it is necessary to add the relevant intermediate Supply/Exhaust module.

Overall dimensions and technical information are provided solely for informative purposes and may be modified without notice

General:

CANopen® module is directly integrated on 2700 solenoid valves manifold via a 37 poles connector, normally used for multipolar cable connection.
2700 series solenoid valves connected to node must be PNP equivalent (final 02 in ordering code).
The node can be easily installed also on solenoid valves manifold already mounted on equipment.
Module can manage up to 32 solenoid valves, and, in the same time, a max number of 4 Input modules 5225.08T or a max number of 4 Input modules 5225.12T.
CANopen® module recognizes automatically the presence of the Input modules on power on.
Regardless of the number of Input modules connected, the managable solenoid valves are 32.
Node power supply is made by a M12 4P male circular connector.
The separation between node 24 VDC Power supply and outputs 24 VDC allows to switch off the outputs maintaning powered the node and inputs, if present.
Connection to Bus CANopen® is possible via 2 M12 5P male - female circular connectors; these two are connected in parallel and according to CiA Draft Recommendation 303-1 (V. 1.3 : 30 December 2004).
Transmission speed can be set by 3 dip-switches.
The node address can be set by 6 dip-switches using BCD numeration.
The module includes an internal terminating resistance that can be activated by a dip-switch.

Ordering code

5525.32T

Scheme / Overall dimensions and I/O layout :

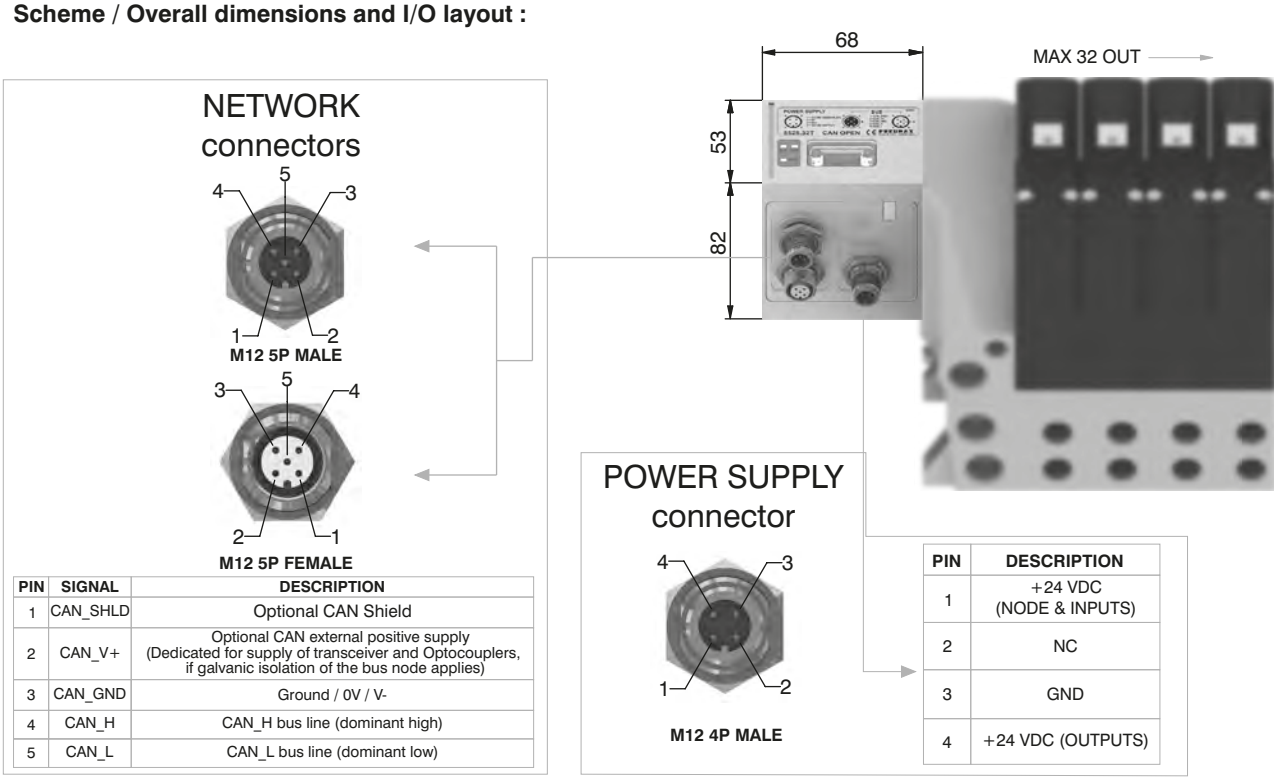

PIN	SIGNAL	DESCRIPTION
1	CAN_SHLD	Optional CAN Shield
2	CAN_V+	Optional CAN external positive supply (Dedicated for supply of transceiver and Optocouplers, if galvanic isolation of the bus node applies)
3	CAN_GND	Ground / 0V / V-
4	CAN_H	CAN_H bus line (dominant high)
5	CAN_L	CAN_L bus line (dominant low)

PIN	DESCRIPTION
1	+24 VDC (NODE & INPUTS)
2	NC
3	GND
4	+24 VDC (OUTPUTS)

Technical characteristics

	Model	5525.32T
	Specifications	CiA Draft Standard Proposal 301 V 4.10 (15 August 2006)
	Case	Reinforced technopolymer
Power supply	Power supply connection	M12 4P male connector (IEC 60947-5-2)
	Power supply voltage	+24 VDC +/- 10%
	Node consumption (without inputs)	30 mA
	Power supply diagnosis	Green LED PWR
Outputs	PNP equivalent outputs	+24 VDC +/- 10%
	Maximum current for each output	100 mA
	Maximum output number	32
	Max output simultaneously actuated	32
Network	Network connectors	2 M12 5P connectors male-female Type A (IEC 60947-5-2)
	Baud rate	10 - 20 - 50 - 125 - 250 - 500 - 800 - 1000 Kbit/s
	Addresses, possible numbers	From 1 to 63
	Max nodes in net	64 (slave + master)
	Bus maximum recommended length	100 m at 500 Kbit/s
	Bus diagnosis	Green LED + Red LED
	Configuration file	Available from our web site: http://www.pneumaxspa.com
	IP protection grade	IP65 when assembled
	Temperature range	From 0° to +50° C

General:

DeviceNet module is directly integrated on 2700 solenoid valves manifold via a 37 poles connector, normally used for multipolar cable connection.
2700 series solenoid valves connected to node must be PNP equivalent (final 02 in ordering code).
The node can be easily installed also on solenoid valves manifold already mounted on equipment.
Module can manage up to 32 solenoid valves, and, in the same time, a max number of 4 Input modules 5225.08T or a max number of 4 Input modules 5225.12T.
DeviceNet module recognizes automatically the presence of the Input modules on power on.
Regardless of the number of Input modules connected, the managable solenoid valves are 32.
Node power supply is made by a M12 4P male circular connector.
The separation between node 24 VDC Power supply and outputs 24 VDC allows to switch off the outputs maintaning powered the node and inputs, if present.
Connection to Bus DeviceNet is possible via 2 M12 5P male - female circular connectors; these two are connected in parallel and according to DeviceNet Specifications Volume I, release 2.0.
Transmission speed can be set by 3 dip-switches.
The node address can be set by 6 dip-switches using BCD numeration.
The module includes an internal terminating resistance that can be activated by a dip-switch.

Ordering code

5425.32T

Scheme / Overall dimensions and I/O layout :

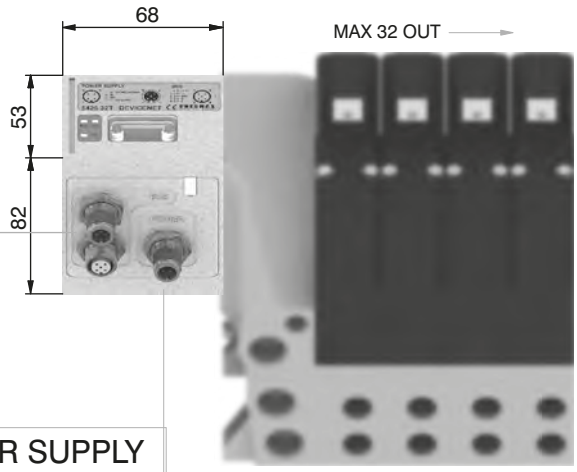

NETWORK connectors

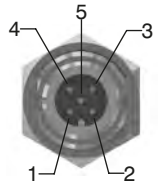

M12 5P MALE

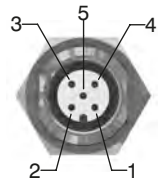

M12 5P FEMALE

PIN	SIGNAL	DESCRIPTION
1	CAN_SHLD	Optional CAN Shield
2	CAN_V+	Optional CAN external positive supply (Dedicated for supply of transceiver and Optocouplers, if galvanic isolation of the bus node applies)
3	CAN_GND	Ground / 0V / V-
4	CAN_H	CAN_H bus line (dominant high)
5	CAN_L	CAN_L bus line (dominant low)

POWER SUPPLY connector

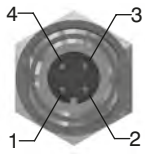

M12 4P MALE

PIN	DESCRIPTION
1	+24 VDC (NODE & INPUTS)
2	NC
3	GND
4	+24 VDC (OUTPUTS)

Technical characteristics

	Model	5425.32T
	Specifications	DeviceNet Specifications Volume I, release 2.0.
	Case	Reinforced technopolymer
Power supply	Power supply connection	M12 4P male connector (IEC 60947-5-2)
	Power supply voltage	+24 VDC +/- 10%
	Node consumption (without inputs)	30 mA
	Power supply diagnosis	Green LED PWR
Outputs	PNP equivalent outputs	+24 VDC +/- 10%
	Maximum current for each output	100 mA
	Maximum output number	32
	Max output simultaneously actuated	32
Network	Network connectors	2 M12 5P connectors male-female Type A (IEC 60947-5-2)
	Baud rate	125 - 250 - 500 Kbit/s
	Addresses, possible numbers	From 1 to 63
	Max nodes in net	64 (slave + master)
	Bus maximum recommended length	100 m at 500 Kbit/s
	Bus diagnosis	Green LED + Red LED
	Configuration file	Available from our web site: http://www.pneumaxspa.com
	IP protection grade	IP65 when assembled
	Temperature range	From 0° to +50° C

Overall dimensions and technical information are provided solely for informative purposes and may be modified without notice

General:

PROFIBUS DP module is directly integrated on 2700 solenoid valves manifold via a 37 poles connector, normally used for multipolar cable connection.
2700 series solenoid valves connected to node must be PNP equivalent (final 02 in ordering code).
The node can be easily installed also on solenoid valves manifold already mounted on equipment.
Module can manage up to 32 solenoid valves, and, in the same time, a max number of 8 Input modules 5225.08T or a max number of 8 Input modules 5225.12T.
PROFIBUS DP module recognizes automatically the presence of the Input modules on power on.
Regardless of the number of Input modules connected, the managable solenoid valves are 32.
Node power supply is made by a M12 4P male circular connector.
The separation between node 24 VDC Power supply and outputs 24 VDC allows to switch off the outputs maintaning powered the node and inputs, if present.
Connection to Bus PROFIBUS DP is possible via 2 M12 type B 5P male - female circular connectors; these two are connected in parallel and according to PROFIBUS Interconnection Technology (Version 1.1 : August 2001).
The node address can be set using BCD numeration: 4 dip-switches for the units and 4 dip-switches for the tens.
The module includes an internal terminating resistance that can be activated by 2 dip-switches.

Ordering code

5325.32T

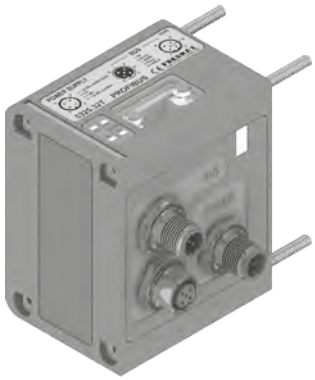

Scheme / Overall dimensions and I/O layout :

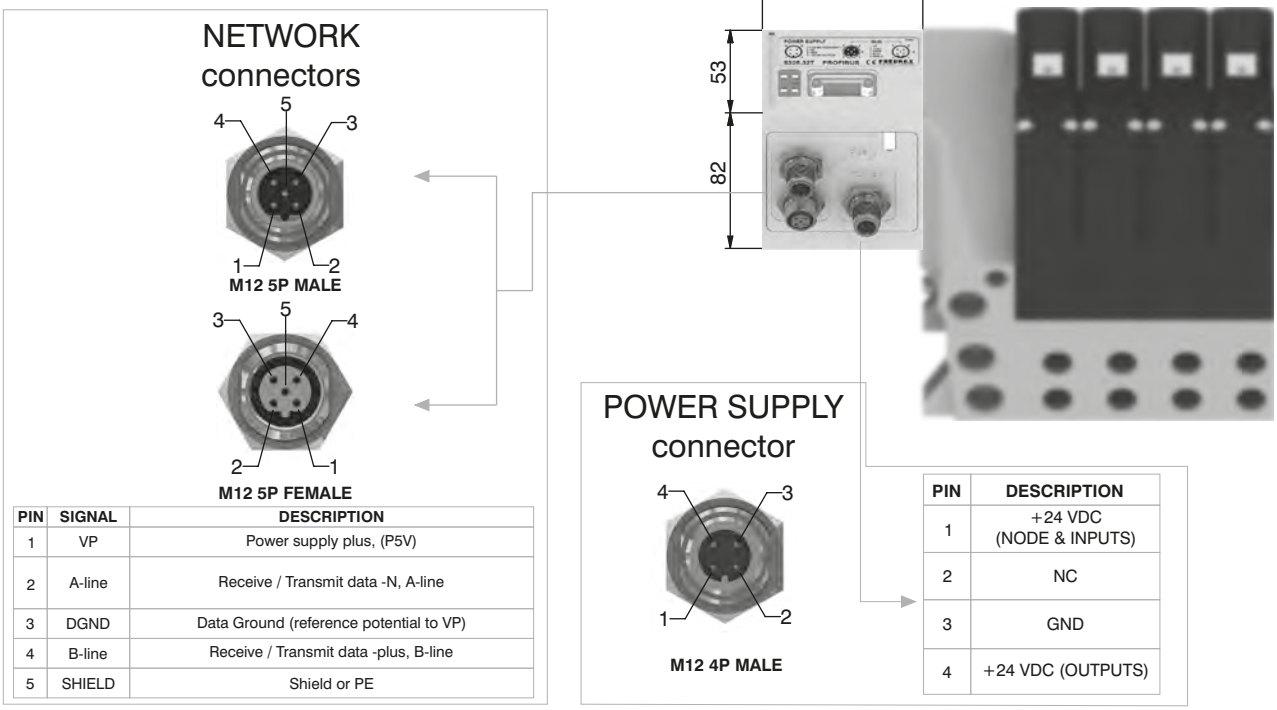

PIN	SIGNAL	DESCRIPTION
1	VP	Power supply plus, (P5V)
2	A-line	Receive / Transmit data -N, A-line
3	DGND	Data Ground (reference potential to VP)
4	B-line	Receive / Transmit data -plus, B-line
5	SHIELD	Shield or PE

PIN	DESCRIPTION
1	+24 VDC (NODE & INPUTS)
2	NC
3	GND
4	+24 VDC (OUTPUTS)

Technical characteristics

	Model	5325.32T
	Specifications	PROFIBUS DP
	Case	Reinforced technopolymer
Power supply	Power supply connection	M12 4P male connector (IEC 60947-5-2)
	Power supply voltage	+24 VDC +/- 10%
	Node consumption (without inputs)	50 mA
	Power supply diagnosis	Green LED PWR / Green LED OUT
Outputs	PNP equivalent outputs	+24 VDC +/- 10%
	Maximum current for each output	100 mA
	Maximum output number	32
	Max output simultaneously actuated	32
Network	Network connectors	2 M12 5P male-female connectors Type B
	Baud rate	9,6 - 19,2 - 93,75 - 187,5 - 500 - 1500 - 3000 - 6000 - 12000 Kbit/s
	Addresses, possible numbers	From 1 to 99
	Max nodes in net	100 (slave + master)
	Bus maximum recommended length	100 m at 12 Mbit/s - 1200 m at 9,6 Kbit/s
	Bus diagnosis	Green LED + Red LED
	Configuration file	Available from our web site: http://www.pneumaxspa.com
	IP protection grade	IP65 when assembled
	Temperature range	From 0° to +50° C

Overall dimensions and technical information are provided solely for informative purposes and may be modified without notice

General:

EtherCAT® module is directly integrated on 2700 solenoid valves manifold via a 37 poles connector, normally used for multipolar cable connection.
2700 series solenoid valves connected to node must be PNP equivalent (final 02 in ordering code).
The node can be easily installed also on solenoid valves manifold already mounted on equipment.
Module can manage up to 32 solenoid valves, and, in the same time, a max number of 4 Input modules 5225.08T or a max number of 4 Input modules 5225.12T.
The EtherCAT® module, regardless the number of Input module connected, reports to have connected 4 Input modules.
Regardless of the number of Input modules connected, the managable solenoid valves are 32.
Node power supply is made by a M12 4P male circular connector.
The separation between node 24 VDC Power supply and outputs 24 VDC allows to switch off the outputs maintaning powered the node and inputs, if present.
Connection to Bus EtherCAT® is possible via 2 M12 4P type D female circular connectors. These two connectors lead the signal to two different communication ports, so they are not connected in parallel.
The node address is assigned during configuration.
Note: 5700 series has a different configuration file from series 5600.

Ordering code

5725.32T.EC

Scheme / Overall dimensions and I/O layout :

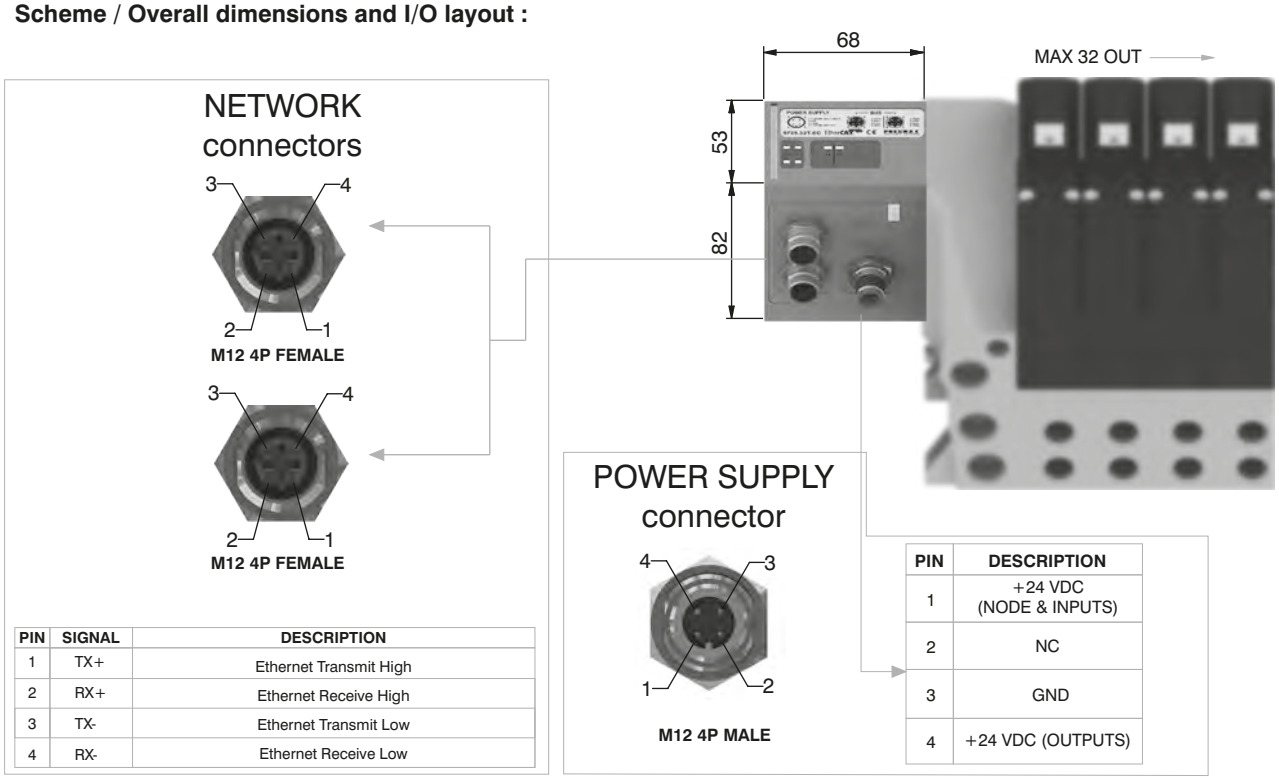

PIN	SIGNAL	DESCRIPTION
1	TX+	Ethernet Transmit High
2	RX+	Ethernet Receive High
3	TX-	Ethernet Transmit Low
4	RX-	Ethernet Receive Low

PIN	DESCRIPTION
1	+24 VDC (NODE & INPUTS)
2	NC
3	GND
4	+24 VDC (OUTPUTS)

Technical characteristics

	Model	5725.32T.EC
	Specifications	EtherCAT® Specifications ETG.1000 series
	Case	Reinforced technopolymer
Power supply	Power supply connection	M12 4P male connector (IEC 60947-5-2)
	Power supply voltage	+24 VDC +/- 10%
	Node consumption (without inputs)	400 mA
	Power supply diagnosis	Green LEDPWR / Green LED OUT
Outputs	PNP equivalent outputs	+24 VDC +/- 10%
	Maximum current for each output	100 mA
	Maximum output number	32
	Max output simultaneously actuated	32
Network	Network connectors	2 M12 4P female connectors Type D (IEC 61076-2-101)
	Baud rate	100 Mbit/s
	Addresses, possible numbers	From 1 to 65535
	Max nodes in net	65536 (Master + Slave)
	Maximum distance between 2 nodes	100 m
	Bus diagnosis	1 green and 1 red LED for status + 2 LEDs for link & activity
	Configuration file	Available from our web site: http://www.pneumaxspa.com
	IP protection grade	IP65 when assembled
	Temperature range	From 0° to +50° C

Overall dimensions and technical information are provided solely for informative purposes and may be modified without notice

General :

PROFINET IO RT module is directly integrated on 2700 solenoid valves manifold via a 37 poles connector, normally used for multipolar cable connection.
2700 series solenoid valves connected to node must be PNP equivalent (final 02 in ordering code).
The node can be easily installed also on solenoid valves manifold already mounted on equipment.
Module can manage up to 32 solenoid valves, and, in the same time, a max number of 8 Input modules 5225.08T or a max number of 8 Input modules 5225.12T.
The PROFINET IO RT module, regardless the number of Input module connected, reports to have connected 8 Input modules.
Regardless of the number of Input modules connected, the managable solenoid valves are 32.
Node power supply is made by a M12 4P male circular connector.
The separation between node 24 VDC Power supply and outputs 24 VDC allows to switch off the outputs maintaning powered the node and inputs, if present.
Connection to Bus PROFINET IO RT is possible via 2 M12 4P type D female circular connectors. These two connectors lead the signal to two different communication ports, so they are not connected in parallel.
The node address is assigned during configuration.

Ordering code

5725.32T.PN

Scheme / Overall dimensions and I/O layout :

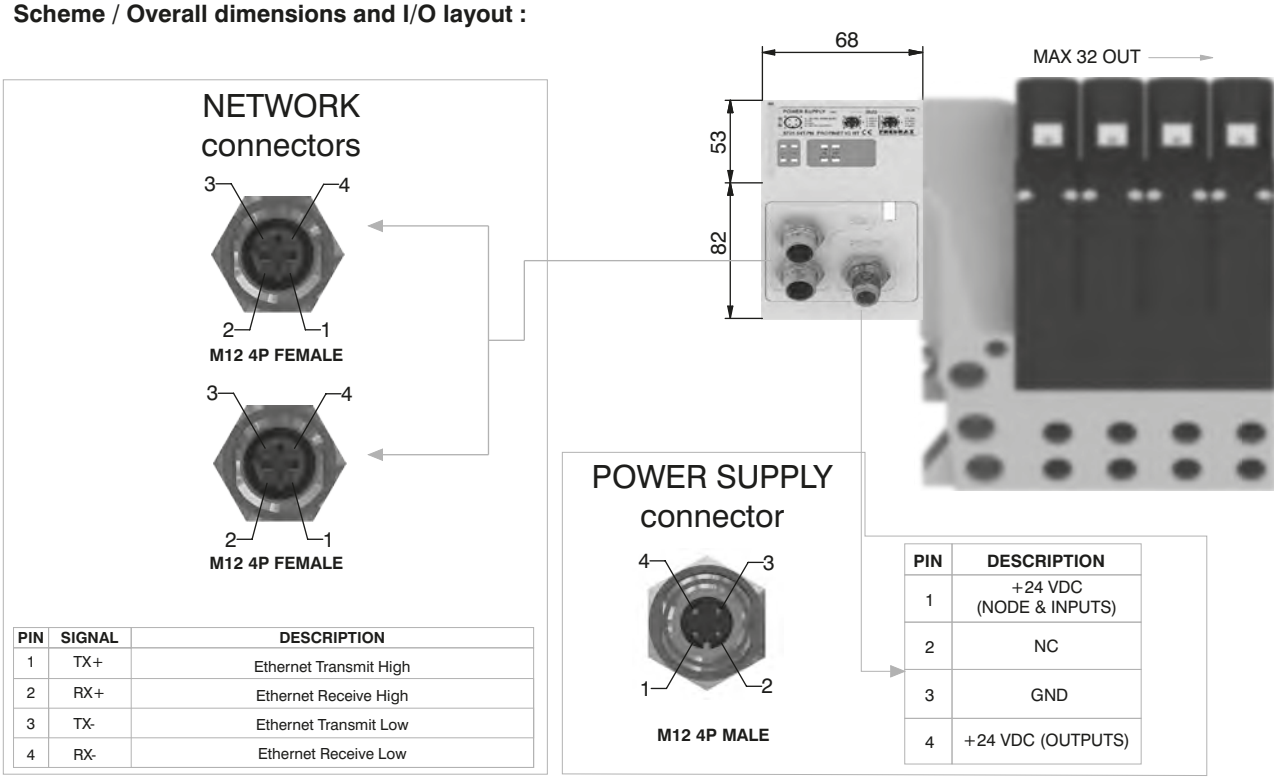

PIN	SIGNAL	DESCRIPTION
1	TX+	Ethernet Transmit High
2	RX+	Ethernet Receive High
3	TX-	Ethernet Transmit Low
4	RX-	Ethernet Receive Low

PIN	DESCRIPTION
1	+24 VDC (NODE & INPUTS)
2	NC
3	GND
4	+24 VDC (OUTPUTS)

Technical characteristics

	Model	5725.32T.PN
	Specifications	PROFINET IO RT
	Case	Reinforced technopolymer
Power supply	Power supply connection	M12 4P male connector (IEC 60947-5-2)
	Power supply voltage	+24 VDC +/- 10%
	Node consumption (without inputs)	400 mA
	Power supply diagnosis	Green LED PWR / Green LED OUT
Outputs	PNP equivalent outputs	+24 VDC +/- 10%
	Maximum current for each output	100 mA
	Maximum output number	32
	Max output simultaneously actuated	32
Network	Network connectors	2 M12 4P female connectors Type D (IEC 61076-2-101)
	Baud rate	100 Mbit/s
	Addresses, possible numbers	As an IP address
	Max nodes in net	As an Ethernet Network
	Maximum distance between 2 nodes	100 m
	Bus diagnosis	1 green and 1 red LED for status + 4 LEDs for link & activity
	Configuration file	Available from our web site: http://www.pneumaxspa.com
	IP protection grade	IP65 when assembled
	Temperature range	From 0° to +50° C

General :

EtherNet/IP module is directly integrated on 2700 solenoid valves manifold via a 37 poles connector, normally used for multipolar cable connection.
2700 series solenoid valves connected to node must be PNP equivalent (final 02 in ordering code).
The node can be easily installed also on solenoid valves manifold already mounted on equipment.
Module can manage up to 32 solenoid valves, and, in the same time, a max number of 8 Input modules 5225.08T or a max number of 8 Input modules 5225.12T.
The EtherNet/IP module, regardless the number of Input module connected, reports to have connected 8 Input modules.
Regardless of the number of Input modules connected, the managable solenoid valves are 32.
Node power supply is made by a M12 4P male circular connector.
The separation between node 24 VDC Power supply and outputs 24 VDC allows to switch off the outputs maintaning powered the node and inputs, if present.
Connection to Bus EtherNet/IP is possible via 2 M12 4P type D female circular connectors. These two connectors lead the signal to two different communication ports, so they are not connected in parallel.
The node address is assigned during configuration.

Ordering code

5725.32T.EI

Scheme / Overall dimensions and I/O layout :

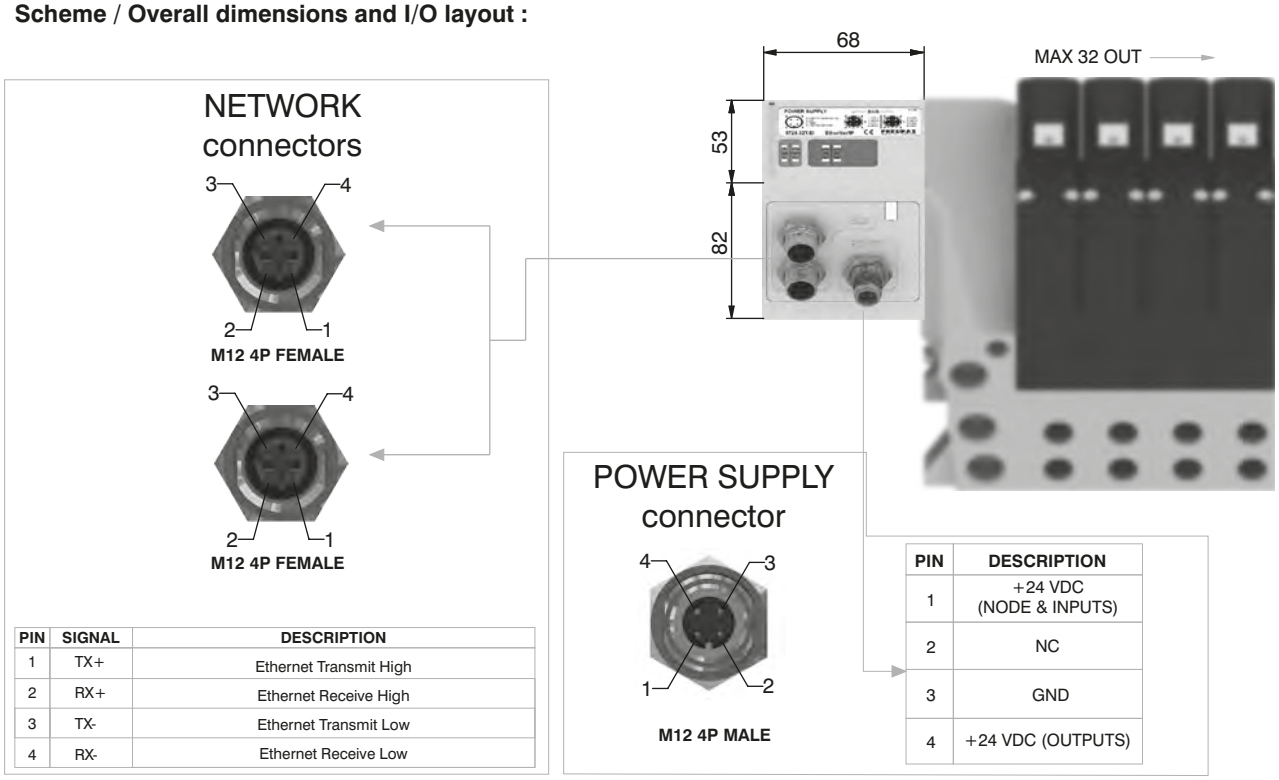

PIN	SIGNAL	DESCRIPTION
1	TX+	Ethernet Transmit High
2	RX+	Ethernet Receive High
3	TX-	Ethernet Transmit Low
4	RX-	Ethernet Receive Low

PIN	DESCRIPTION
1	+24 VDC (NODE & INPUTS)
2	NC
3	GND
4	+24 VDC (OUTPUTS)

Technical characteristics

	Model	5725.32T.EI
	Specifications	The EtherNet/IP Specification
	Case	Reinforced technopolymer
Power supply	Power supply connection	M12 4P male connector (IEC 60947-5-2)
	Power supply voltage	+24 VDC +/- 10%
	Node consumption (without inputs)	400 mA
	Power supply diagnosis	Green LED PWR / Green LED OUT
Outputs	PNP equivalent outputs	+24 VDC +/- 10%
	Maximum current for each output	100 mA
	Maximum output number	32
	Max output simultaneously actuated	32
Network	Network connectors	2 M12 4P female connectors Type D (IEC 61076-2-101)
	Baud rate	100 Mbit/s
	Addresses, possible numbers	As an IP address
	Max nodes in net	As an Ethernet Network
	Maximum distance between 2 nodes	100 m
	Bus diagnosis	1 green and 1 red LED for status + 4 LEDs for link & activity
	Configuration file	Available from our web site: http://www.pneumaxspa.com
	IP protection grade	IP65 when assembled
	Temperature range	From 0° to +50° C

Overall dimensions and technical information are provided solely for informative purposes and may be modified without notice

General :

Powerlink module is directly integrated on 2700 solenoid valves manifold via a 37 poles connector, normally used for multipolar cable connection.
2700 series solenoid valves connected to node must be PNP equivalent (final 02 in ordering code).
The node can be easily installed also on solenoid valves manifold already mounted on equipment.
Module can manage up to 32 solenoid valves, and, in the same time, a max number of 8 Input modules 5225.08T or a max number of 8 Input modules 5225.12T.
The Powerlink module, regardless the number of Input module connected, reports to have connected 8 Input modules.
Regardless of the number of Input modules connected, the managable solenoid valves are 32.
Node power supply is made by a M12 4P male circular connector.
The separation between node 24 VDC Power supply and outputs 24 VDC allows to switch off the outputs maintaning powered the node and inputs, if present.
Connection to Bus Powerlink is possible via 2 M12 4P type D female circular connectors. These two connectors lead the signal to two different communication ports, so they are not connected in parallel.
The node address is assigned during configuration.

Ordering code

5725.32T.PL

Scheme / Overall dimensions and I/O layout :

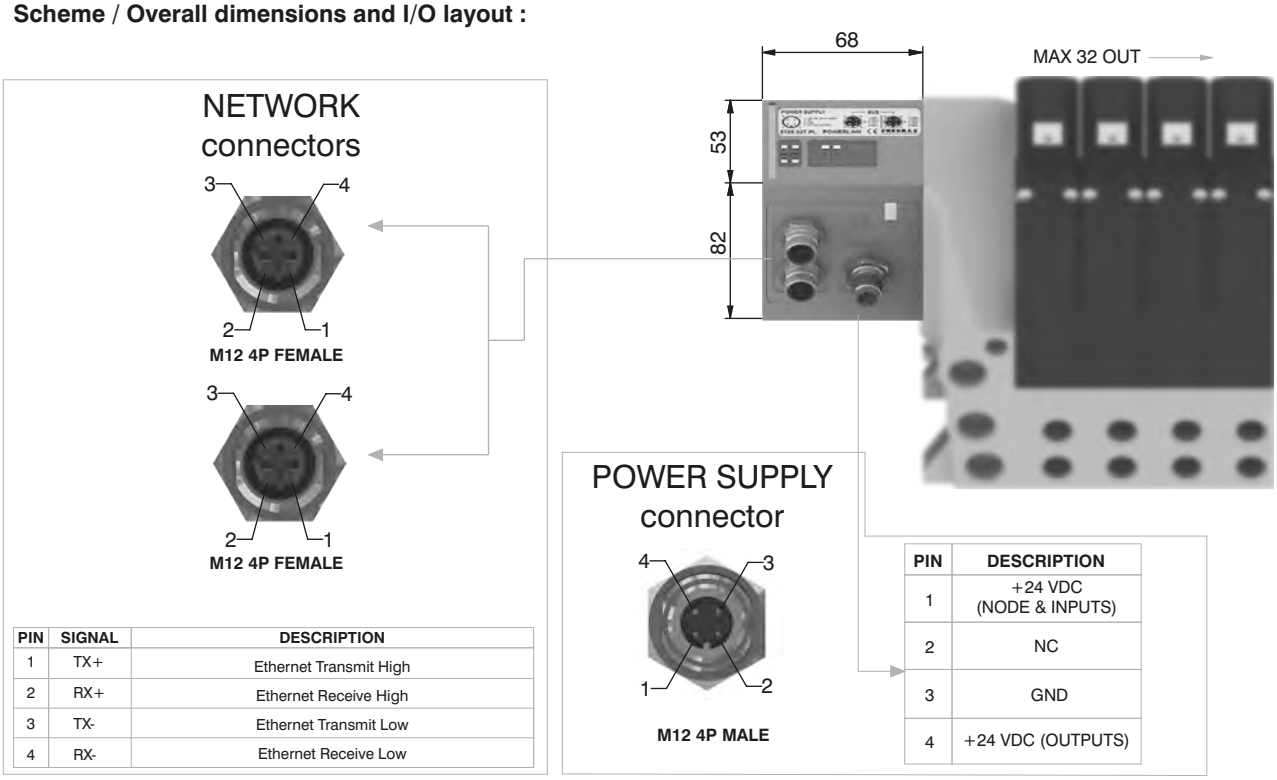

PIN	SIGNAL	DESCRIPTION
1	TX+	Ethernet Transmit High
2	RX+	Ethernet Receive High
3	TX-	Ethernet Transmit Low
4	RX-	Ethernet Receive Low

PIN	DESCRIPTION
1	+24 VDC (NODE & INPUTS)
2	NC
3	GND
4	+24 VDC (OUTPUTS)

Technical characteristics

	Model	5725.32T.PL
	Specifications	Ethernet POWERLINK Communication Profile Specifications
	Case	Reinforced technopolymer
Power supply	Power supply connection	M12 4P male connector (IEC 60947-5-2)
	Power supply voltage	+24 VDC +/- 10%
	Node consumption (without inputs)	400 mA
	Power supply diagnosis	Green LED PWR / Green LED OUT
Outputs	PNP equivalent outputs	+24 VDC +/- 10%
	Maximum current for each output	100 mA
	Maximum output number	32
	Max output simultaneously actuated	32
Network	Network connectors	2 M12 4P female connectors Type D (IEC 61076-2-101)
	Baud rate	100 Mbit/s
	Addresses, possible numbers	239
	Max nodes in net	240
	Maximum distance between 2 nodes	100 m
	Bus diagnosis	1 green and 1 red LED for status + 2 LEDs for link & activity
	Configuration file	Available from our web site: http://www.pneumaxspa.com
	IP protection grade	IP65 when assembled
	Temperature range	From 0° to +50° C

General :

Modbus/TCP module is directly integrated on 2700 solenoid valves manifold via a 37 poles connector, normally used for multipolar cable connection.
2700 series solenoid valves connected to node must be PNP equivalent (final 02 in ordering code).
The node can be easily installed also on solenoid valves manifold already mounted on equipment.
Module can manage up to 32 solenoid valves, and, in the same time, a max number of 8 Input modules 5225.08T or a max number of 8 Input modules 5225.12T.
The Modbus/TCP module, regardless the number of Input module connected, reports to have connected 8 Input modules.
Regardless of the number of Input modules connected, the managable solenoid valves are 32.
Node power supply is made by a M12 4P male circular connector.
The separation between node 24 VDC Power supply and outputs 24 VDC allows to switch off the outputs maintaning powered the node and inputs, if present.
Connection to Bus Modbus/TCP is possible via 2 M12 4P type D female circular connectors. These two connectors lead the signal to two different communication ports, so they are not connected in parallel.
The node address is assigned during configuration.

Ordering code

5725.32T.MT

Scheme / Overall dimensions and I/O layout :

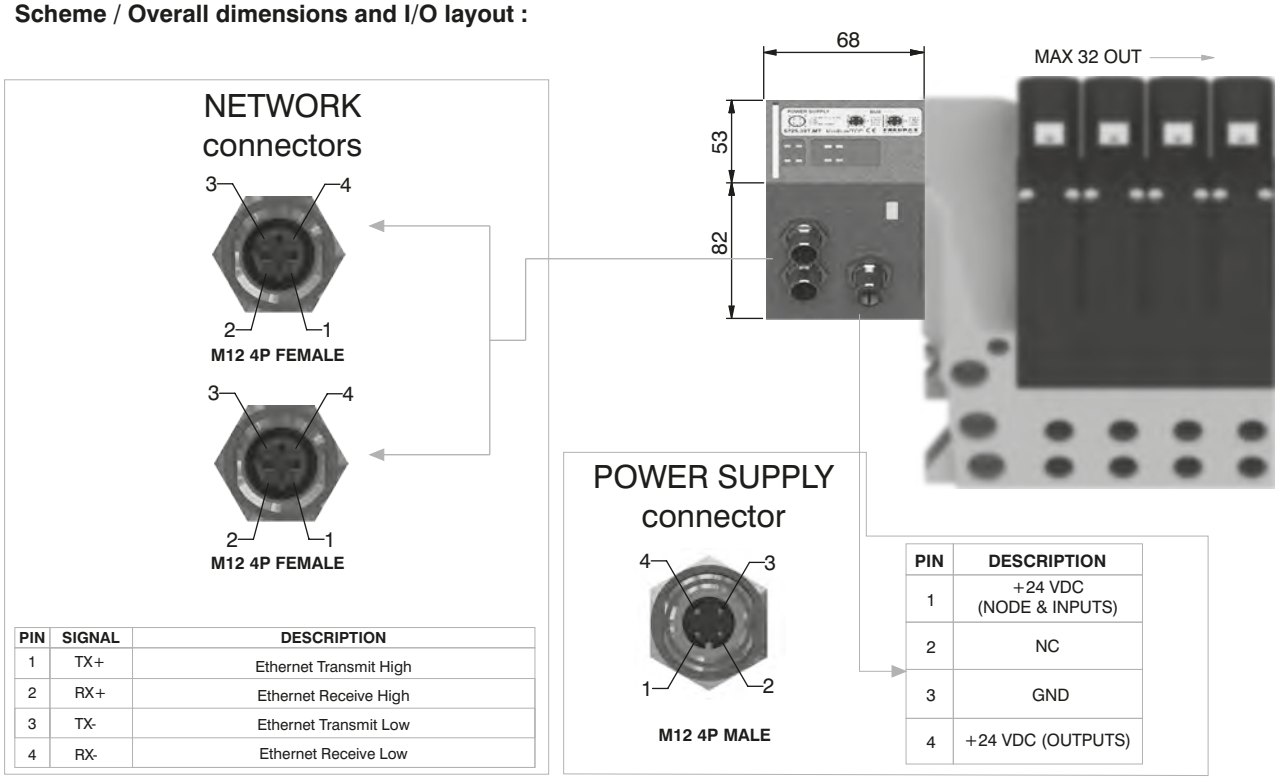

PIN	SIGNAL	DESCRIPTION
1	TX+	Ethernet Transmit High
2	RX+	Ethernet Receive High
3	TX-	Ethernet Transmit Low
4	RX-	Ethernet Receive Low

PIN	DESCRIPTION
1	+24 VDC (NODE & INPUTS)
2	NC
3	GND
4	+24 VDC (OUTPUTS)

Technical characteristics

	Model	5725.32T.MT
	Specifications	MODBUS Application Protocol Specification V1.1a, June 4, 2004
	Case	Reinforced technopolymer
Power supply	Power supply connection	M12 4P male connector (IEC 60947-5-2)
	Power supply voltage	+24 VDC +/- 10%
	Node consumption (without inputs)	400 mA
	Power supply diagnosis	Green LED PWR / Green LED OUT
Outputs	PNP equivalent outputs	+24 VDC +/- 10%
	Maximum current for each output	100 mA
	Maximum output number	32
	Max output simultaneously actuated	32
Network	Network connectors	2 M12 4P female connectors Type D (IEC 61076-2-101)
	Baud rate	100 Mbit/s
	Addresses, possible numbers	248
	Max nodes in net	248
	Maximum distance between 2 nodes	100 m
	Bus diagnosis	1 green and 1 red LED for status + 2 LEDs for link & activity
	Configuration file	Modbus/TCP nodes don't require configuration file
	IP protection grade	IP65 when assembled
	Temperature range	From 0° to +50° C

Overall dimensions and technical information are provided solely for informative purposes and may be modified without notice

General :

Modules have 8 connectors M8 3P female.

The Inputs are PNP equivalent 24 VDC ±10%.
To each connector it is possible to plug both 2 wires Inputs (switches, magnetic switches pressure switches, etc) or 3 wires Inputs (proximity, photocells, electronic sensors, etc).
The maximum current available for all 8 Inputs is 300 mA.
Each module includes a 300 mA self-mending fuse. If a short circuit or a overcharge (overall current >300mA) occur the safety device acts cutting the 24 VDC power supply to all M8 connectors on the module and switching off the green led PWR. Any other Input module connected to the node will remain powered and will function correctly.
Once the cause of the fault disappears the green LED PWR lights up indicating the ON state and the node will re-start to operate.
The maximum number of Input modules supported is 4 for CANopen®, DeviceNet and EtherCAT®.
The maximum number of Input modules supported is 8 for PROFIBUS DP, PROFINET IO RT/IRT EtherNet/IP and Powerlink.

Ordering code

5225.08T

Scheme / Overall dimensions and I/O layout :

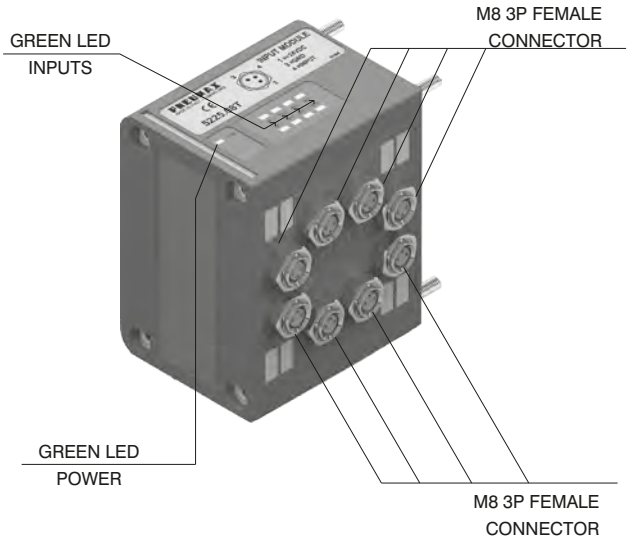

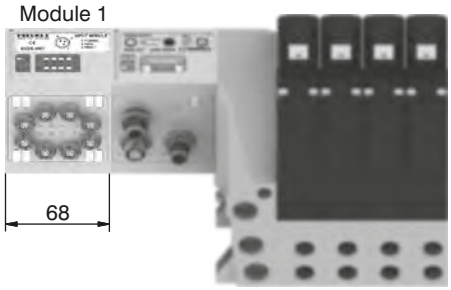

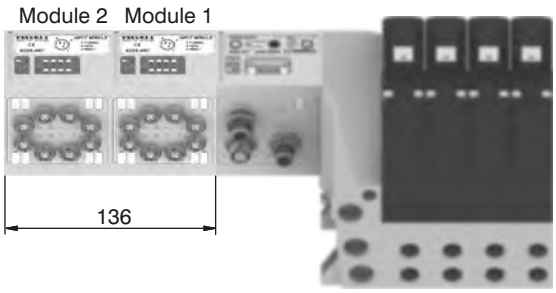

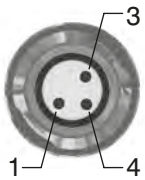

PIN	DESCRIPTION
1	+24 VDC
4	INPUT
3	GND

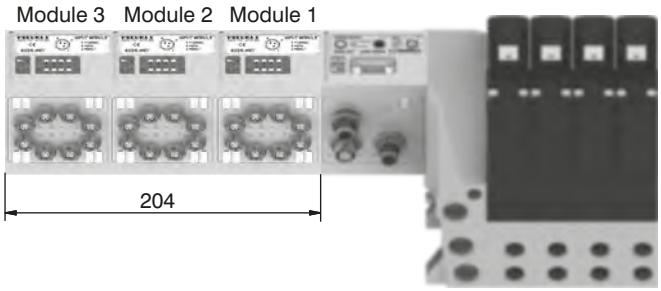

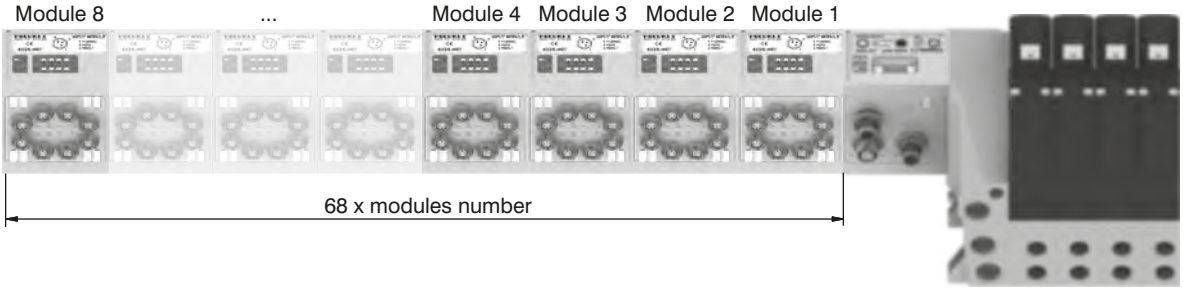

General :

Modules have 4 connectors M12 5P female.

The Inputs are PNP equivalent 24 VDC ±10%.
To each connector it is possible to plug both 2 wires Inputs (switches, magnetic switches pressure switches, etc) or 3 wires Inputs (proximity, photocells, electronic sensors, etc).
The maximum current available for all 8 Inputs is 300 mA.
Each module includes a 300 mA self-mending fuse. If a short circuit or a overcharge (overall current >300mA) occur the safety device acts cutting the 24 VDC power supply to all M8 connectors on the module and switching off the green led PWR. Any other Input module connected to the node will remain powered and will function correctly.
Once the cause of the fault disappears the green LED PWR lights up indicating the ON state and the node will re-start to operate.
The maximum number of Input modules supported is 4 for CANopen®, DeviceNet and EtherCAT®.
The maximum number of Input modules supported is 8 for PROFIBUS DP, PROFINET IO RT/IRT EtherNet/IP and Powerlink.

Ordering code

5225.12T

Scheme / Overall dimensions and I/O layout :

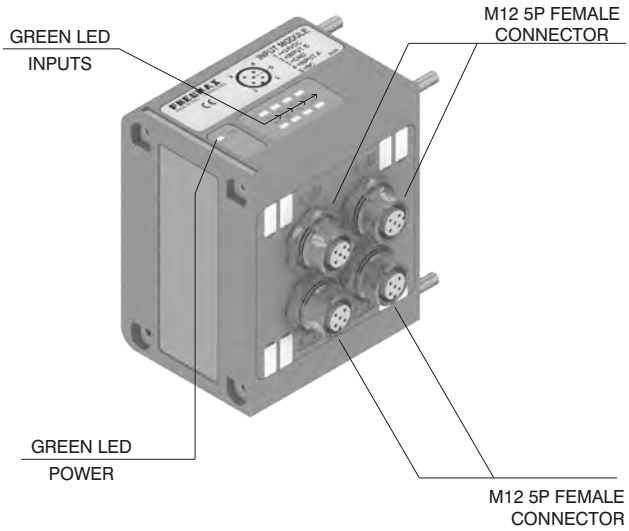

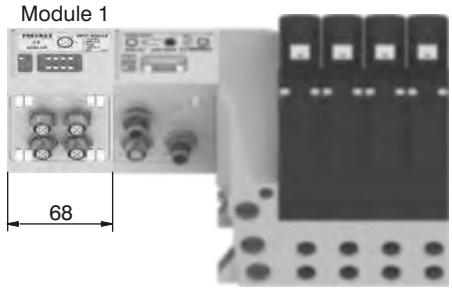

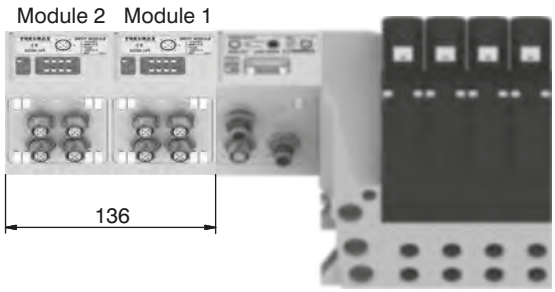

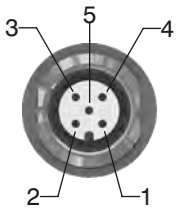

PIN	DESCRIPTION
1	+24 VDC
2	INPUT B
3	GND
4	INPUT A
5	NC

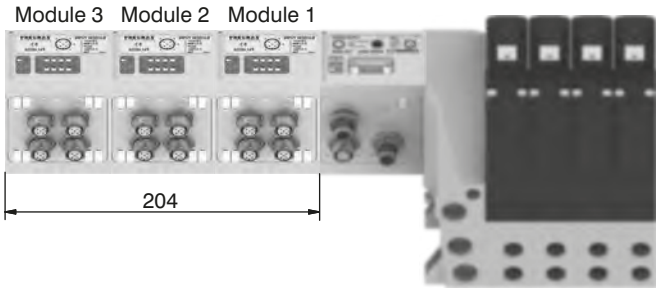

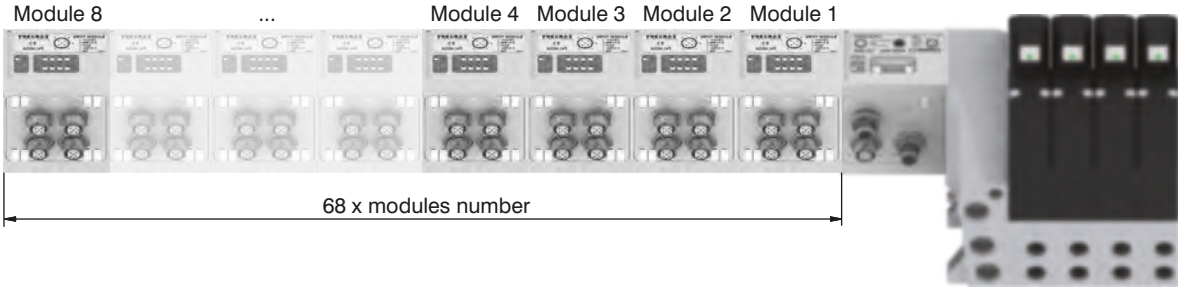

Overall dimensions and technical information are provided solely for informative purposes and may be modified without notice

General :

This module is fitted with two M8 3 pin female connectors.

With this module is possible to read two analogue inputs (voltage or current).
The inputs are sampled at 12 bit.
For practicality the sampled value is transmitted with 16 bit, of which the four less significant are fixed at zero.

Available models:
5225.2T.00T (voltage signal 0 - 10V);
5225.2T.01T (voltage signal 0 - 5V);
5225.2C.00T (current signal 4 - 20mA);
5225.2C.01T (current signal 0 - 20mA).

Each module includes a 300 mA self-mending fuse. Should a short circuit or a overcharge (overall current >300mA) occur the safety device intervenes cutting the 24VDC power supply to all M8 connectors on the module and switching off the green LED PWR. Any other Input module connected to the node will remain powered and will function correctly. Once the cause of the fault is removed the green LED lights up indicating the ON state and the node will re-start to operate.

This module is counted as four 8 digital Inputs modules.

The Maximum number of 2 analogue Inputs modules supported is 1 for CANopen®, DeviceNet, PROFIBUS DP and EtherCAT®.
The Maximum number of 2 analogue Inputs modules supported is 2 for PROFINET IO RT/IRT, EtherNet/IP and Powerlink.

Ordering code

5225.2 _ . _T

Scheme / Overall dimensions and I/O layout :

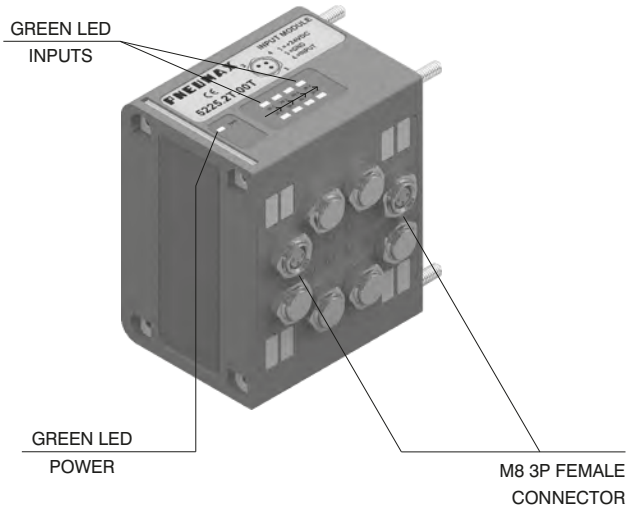

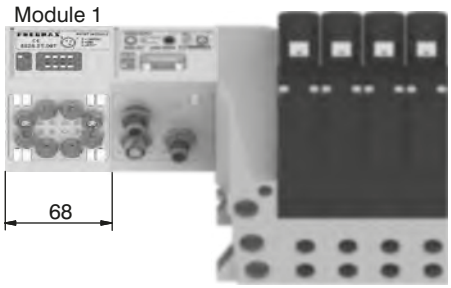

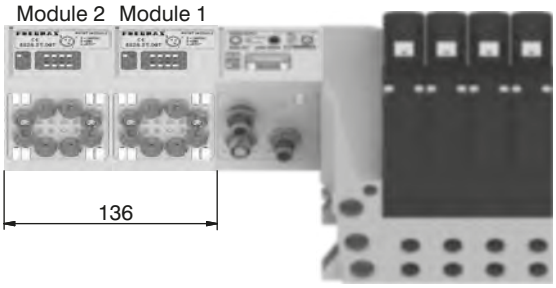

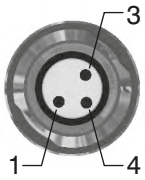

PIN	DESCRIPTION
1	+24 VDC
4	INPUT
3	GND

General :

This module is fitted with two M8 3 pin female connectors.

With this module is possible to read two Pt100 probes.
The inputs are sampled at 12 bit.
For practicality the sampled value is transmitted with 16 bit, of which the four less significant are fixed at zero.

It is possible to plug 3-wires probes or 2-wires probes.
The temperature is expressed in tenths of degree.
The temperature range is 0 – 250°C, beyond which the green LED for probe presence doesn't light on.
The module returns a value correspondent to 250°C when the probe is not connected.

Available models:
5225.2P.00T (2-wires probes);
5225.2P.01T (3-wires probes).

Each module includes a 300 mA self-mending fuse. Should a short circuit or a overcharge (overall current >300mA) occur the safety device intervenes cutting the 24VDC power supply to all M8 connectors on the module and switching off the green LED PWR. Any other Input module connected to the node will remain powered and will function correctly.
Once the cause of the fault is removed the green LED lights up indicating the ON state and the node will re-start to operate.
This module is counted as four 8 digital Inputs modules.

The Maximum number of 2 Pt100 Inputs modules supported is 1 for CANopen®, DeviceNet, PROFIBUS DP and EtherCAT®.
The Maximum number of 2 Pt100 Inputs modules supported is 2 for PROFINET IO RT/IRT, EtherNet/IP and Powerlink.

Ordering code

5225.2P . 0_T

Scheme / Overall dimensions and I/O layout :

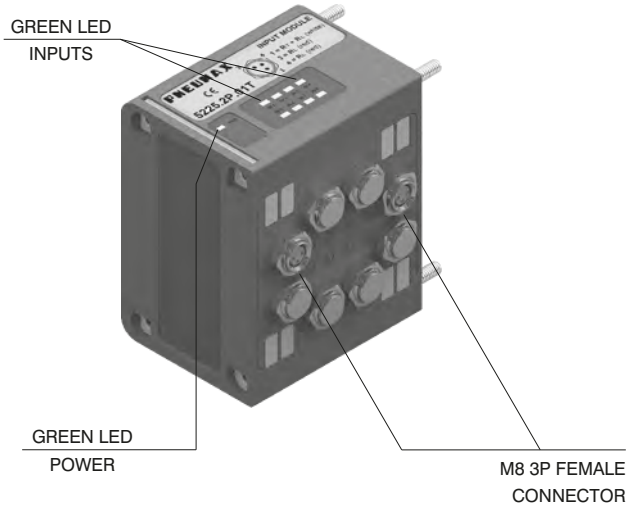

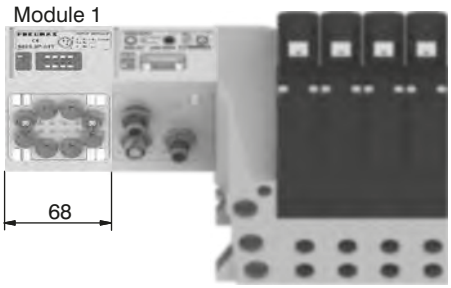

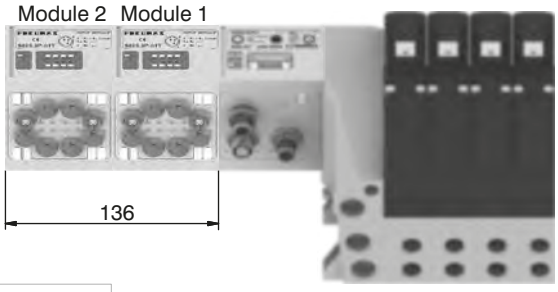

3 WIRES

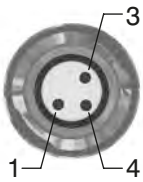

PIN	DESCRIPTION
1	RT (white)
4	RL (red)
3	RL (red)

2 WIRES

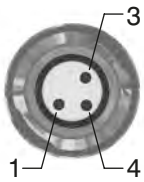

PIN	DESCRIPTION
1	RT (white)
4	NC
3	RL (red)

Overall dimensions and technical information are provided solely for informative purposes and may be modified without notice

General :

This module is fitted with two M8 3 pin female connectors.

With this module is possible to read two Pt100 probes.
The inputs are sampled at 12 bit.
For practicality the sampled value is transmitted with 16 bit, of which the four less significant are fixed at zero.

It is possible to plug 3-wires probes or 2-wires probes.
The temperature is expressed in points according to the formula

$$\text{Temperature} = \left(\frac{\text{Points}}{4095} \times 600\right) - 200$$

The temperature range is -200 to +400°C, beyond which the green LED for probe presence doesn't light on.
The module returns a value correspondent to 400°C when the probe is not connected.

Available models:
5225.2P.10T (2-wires probes);
5225.2P.11T (3-wires probes).

Each module includes a 300 mA self-mending fuse. Should a short circuit or a overcharge (overall current >300mA) occur the safety device intervenes cutting the 24VDC power supply to all M8 connectors on the module and switching off the green LED PWR. Any other INPUT module connected to the node will remain powered and will function correctly.
Once the cause of the fault is removed the green LED lights up indicating the ON state and the node will re-start to operate.
This module is counted as four 8 digital Inputs modules.

The Maximum number of 2 Pt100 Inputs modules supported is 1 for CANopen®, DeviceNet, PROFIBUS DP and EtherCAT®.
The Maximum number of 2 Pt100 Inputs modules supported is 2 for PROFINET IO RT/IRT, EtherNet/IP and Powerlink.

Ordering code

5225.2P . 1_T

Scheme / Overall dimensions and I/O layout :

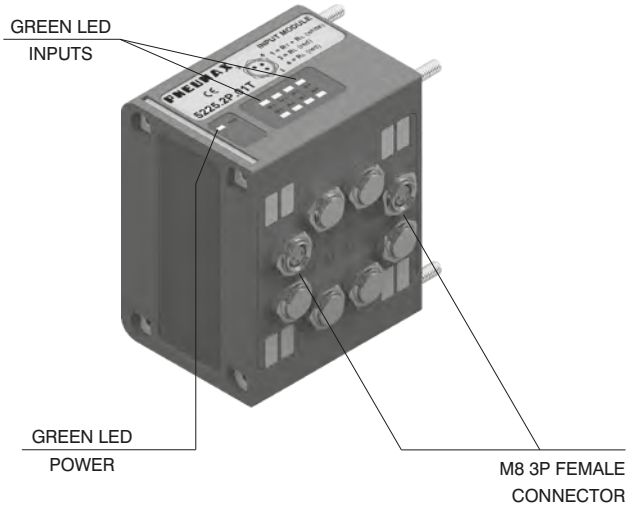

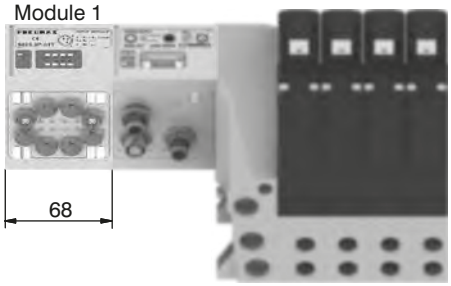

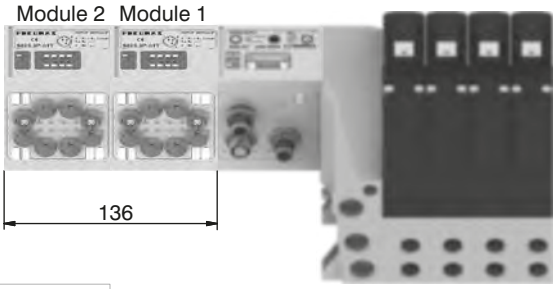

3 WIRES

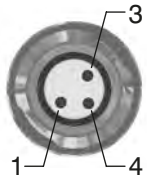

PIN	DESCRIPTION
1	RT (white)
4	RL (red)
3	RL (red)

2 WIRES

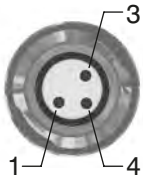

PIN	DESCRIPTION
1	RT (white)
4	NC
3	RL (red)

POWER SUPPLY connector

Socket for Power Supply
STRAIGHT CONNECTOR
M12A 4P FEMALE

Ordering code

5312A.F04.00

Upper view
Slave connector

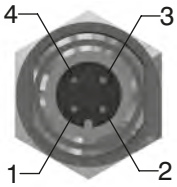

PIN	DESCRIPTION
1	+24 VDC Node
2	
3	0 V
4	+24 VDC Outputs

NETWORK connectors

Socket for Bus CANopen®/DeviceNet
STRAIGHT CONNECTOR
M12A 5P FEMALE

Ordering code

5312A.F05.00

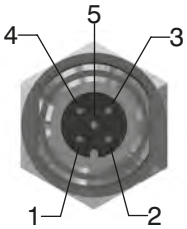

Plug for Bus CANopen®/DeviceNet
STRAIGHT CONNECTOR
M12A 5P MALE

Ordering code

5312A.M05.00

PIN	DESCRIPTION
1	(CAN_SHIELD)
2	(CAN_V+)
3	CAN_GND
4	CAN_H
5	CAN_L

Upper view
Slave connector

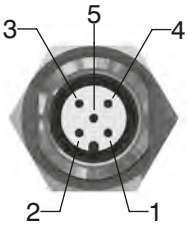

Plug for Bus EtherCAT®,
PROFINET IO RT,
EtherNet/IP and Powerlink
STRAIGHT CONNECTOR M12D 4P MALE

Ordering code

5312D.M04.00

PIN	SIGNAL	DESCRIPTION
1	TX+	Ethernet Transmit High
2	RX+	Ethernet Receive High
3	TX-	Ethernet Transmit Low
4	RX-	Ethernet Receive Low

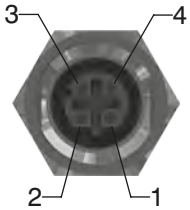

Upper view
Slave connector

Socket for Bus PROFIBUS DP
STRAIGHT CONNECTOR
M12B 5P FEMALE

Ordering code

5312B.F05.00

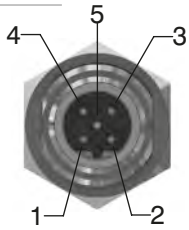

PIN	DESCRIPTION
1	Power Supply
2	A-line
3	DGND
4	B-line
5	SHIELD

Upper view
Slave connector

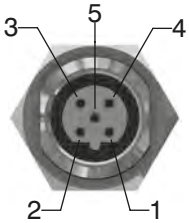

Plug for Bus PROFIBUS DP
STRAIGHT CONNECTOR
M12B 5P MALE

Ordering code

5312B.M05.00

INPUT connectors

Plug for Input module
STRAIGHT CONNECTOR
M8 3P MALE

Ordering code

5308A.M03.00

Upper view
Slave connector

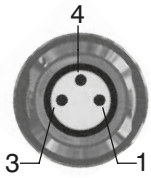

PIN	DESCRIPTION
1	+24 VDC
4	INPUT
3	GND

Plug for Input module
STRAIGHT CONNECTOR
M12A 5P MALE

Ordering code

5312A.M05.00

Plugs

M12 plug

Ordering code

5300.T12

M8 plug

Ordering code

5300.T08

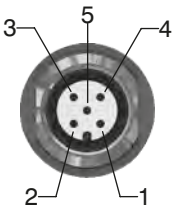

PIN	DESCRIPTION
1	+24 VDC
2	INPUT B
3	GND
4	INPUT A
5	NC

Trademarks: EtherCAT® is registered trademark and patented technology, licensed by Beckhoff Automation GmbH, Germany.

Overall dimensions and technical information are provided solely for informative purposes and may be modified without notice

Manifold Layout configuration

32 OUT VERSION

C3 = CANopen® 32OUT
D3 = DeviceNet 32OUT
P3 = PROFIBUS 32OUT
A3 = EtherCAT® 32OUT (5700 Series)
I3 = EtherNet / IP 32OUT
N3 = PROFINET IO RT 32OUT
L3 = Powerlink 32OUT
M3 = Modbus/TCP 32OUT

INPUT MODULES

A = No module
D1= 8 M8 digital inputs module
D2= 8 M12 digital inputs module
T1= 2 analogue inputs 0-5V module
T2= 2 analogue inputs 0-10V module
C1= 2 analogue inputs 0-20mA module
C2= 2 analogue inputs 4-20mA module
P1= 2 Pt100 inputs 2 wires module
P2= 2 Pt100 inputs 3 wires module
E1= 2 Pt100 inputs 2 wires module extended range
E2= 2 Pt100 inputs 3 wires module extended range

RIGHT ENDPLATE

U0 = Closed
U2 = 25 Poles

I/O MODULE

M8
(Requires 25 poles right endplate)

V27 __ . __ . . . __ . __ . __ __ __ . . . . __ . __ __

MODUL CONFIGURATION

Valve type | Sub-base type

S.V. POWER

E3 = S.V. 2,3W
E5 = S.V. 1W

ACCESSORIES CONFIGURATION

. . .

SUB-BASE TYPE

1 = Base type 1 for Monostable (1 electrical signal occupied)
2 = Base type 2 for Bistable (2 electrical signals occupied)

ACCESSORIES

X = Diaphragm plug on pipe 1
Y = Diaphragm plug on pipe 3
Z = Diaphragm plug on pipe 5
XY = Diaphragm plug on pipe 1 & 3
ZX = Diaphragm plug on pipe 5 & 1
ZY = Diaphragm plug on pipe 5 & 3
ZXY = Diaphragm plug on pipe 5, 1 & 3

VALVE TYPE:

A = Self-feeding
E = External feeding

SHORT CODE FUNCTION / CONNECTION :

A= 5/2 SOLENOID - SPRING
B= 5/2 SOLENOIS - DIFFERENTIAL
C= 5/2 SOLENOID - SOLENOID
E= 5/3 CC SOLENOID -SOLENOID
F= 2x3/2 NC-NC (= 5/3 OC) SOLENOID -SOLENOID
G= 2x3/2 NO-NO (= 5/3 PC) SOLENOID -SOLENOID
H= 2x3/2 NC-NO SOLENOID -SOLENOID
I= 2x3/2 NO-NC SOLENOID -SOLENOID
T= FREE VALVE SPACE PLUG

NOTE:
While configuring the manifold always be careful that the maximum number of electrical signals available is 32.
The use of monostable valve mounted on a base type 2 (2 electrical signals occupied) causes the loss of one electric signal. In this case the monostable valve can be replaced by a bistable valve. The diaphragms plugs are used to intercept the conduits 1,3 & 5 of the base. If it is necessary to interrupt more than one conduit in the same time then put in line the letters which identifies the position (for exemple : regarding the 3 & 5 conduits, put the Y & Z letters).
Should one or more conduits be cut more than one time it is necessary to add the relevant intermediate Supply/Exhaust module.

Series 2300 - ENOVA®

General

Technical innovation, rational design, high performance and extremely compact size: these are the main features the ENOVA® series bring to the market.
Each valve comprises all the necessary pneumatic and electrical functions needed to produce a solenoid valve assembly.
There are no limits to the configuration of the solenoid valve island, as full priority has been given to the end user's needs; the addition or removal of modules is a simple operation that can be swiftly and easily achieved.
The management of the electrical signals through the valves is optimized through a patented dedicated connector in each valve.
Electrical connections are made via a twenty-five pin connector, which is capable of controlling up to twenty-two solenoids.
Electrical and pneumatic connections are located on the same module at one end of the assembly.
Serial bus nodes compatible with most common protocols are easily integrated.
Most widely used and known communication protocols, such as PROFIBUS DP, CANopen®, DeviceNet, AS-Interface can be directly integrated with the valve manifold by simply plugging the necessary module onto the electrical connection, maintaining IP65 environmental protection.
The management of inputs has also been foreseen, and can be achieved by adding one or more expansion modules directly to the serial module.

"Shifting time of pneumatic directional control valves or moving parts, logic devices were measured in accordance to ISO 12238:2001, Pneumatic fluid power-Directional control valves-Measurement of shifting time"

Main characteristics

- Clean profile prevents accumulation of dirt
- Compact size: modules of 12.5 mm
- Connections available: 4 , 6 , 8 mm
- IP65 protection grade
- Optimized electrical connection system
- Electrical and pneumatic line connections on one side
- Quick coupling connection system with visual indicator: locked/unlocked
- Freedom of configuration

Functions

- 5/2 monostable
- 5/2 bistable
- 5/3 closed centres
- 2x3/2 NC/NC (5/3 open centres)
- 2x3/2 NO/NO (5/3 pressured centres)
- 2x3/2 NC/NO
- 2x2/2 NC/NC
- 2x2/2 NO/NO
- 2x2/2 NC/NO

Construction characteristics

Central body	Reinforced Technopolymer
External casing	Reinforced Technopolymer
Operators	Reinforced Technopolymer
Spool seals	PUR
Spools	Aluminium 2011
Springs	Spring steel with protective coating
Piston seals	Oil resistant nitrile rubber - NBR

Technical characteristics

Voltage	24 VDC ± 10% PNP (NPN on request)
Pilot consumption	0,9 Watt
Valve working pressure (1-11)	from vacuum to 10 bar max.
Pilot working pressure (12-14)	from 2,5 to 7 bar max.
Operating temperature	-5°C +50°C
Protection degree	IP65
Fluid	Filtered air. No lubrication needed, if applied it shall be continuous

Attention: dry air must be used for applications below 0°C"

Overall dimensions and technical information are provided solely for informative purposes and may be modified without notice

Solenoid - Differential (Monostable)

Coding: 23ⒺⒸ.52.00.36.Ⓥ

Operational characteristics	
Fluid	Filtered air. No lubrication needed, if applied it shall be continuous
Working pressure (bar)	From vacuum to 10
Pressure range (bar)	2,5 ÷ 7
Temperature °C	-5 ÷ +50
Flow rate at 6 bar with Δp=1 (Nl/min)	700
Responce time according to ISO 12238, activation time (ms)	12
Responce time according to ISO 12238, deactivation time (ms)	15

Shifting time of pneumatic directional control valves or moving parts, logic devices were measured in accordance to ISO 12238:2001

Ⓔ	ELECTRICAL CONTACTS
	0 = STANDARD-only one electric signal
	1 = CEB (Bistable Electrical contacts)-(two electrical signals)
Ⓒ	ELECTRICAL CONTACTS
	4 = Quick connection for tube Ø4
	6 = Quick connection for tube Ø6
	8 = Quick connection for tube Ø8
Ⓥ	VOLTAGE
	02 = 24 VDC PNP
	12 = 24 VDC NPN

SHORT CODE B4
SHORT CODE B6
SHORT CODE B8
SHORT CODE R4 (CEB)
SHORT CODE R6 (CEB)
SHORT CODE R8 (CEB)

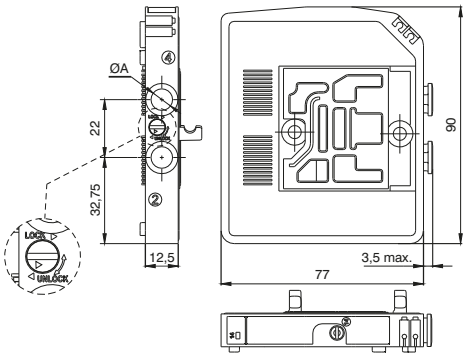

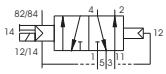

Weight 115 g

Solenoid - Spring (Monostable)

Coding: 23ⒺⒸ.52.00.39.Ⓥ

Operational characteristics	
Fluid	Filtered air. No lubrication needed, if applied it shall be continuous
Working pressure (bar)	From vacuum to 10
Pressure range (bar)	2,5 ÷ 7
Temperature °C	-5 ÷ +50
Flow rate at 6 bar with Δp=1 (Nl/min)	700
Responce time according to ISO 12238, activation time (ms)	9
Responce time according to ISO 12238, deactivation time (ms)	30

Shifting time of pneumatic directional control valves or moving parts, logic devices were measured in accordance to ISO 12238:2001

Ⓔ	ELECTRICAL CONTACTS
	0 = STANDARD-only one electric signal
	1 = CEB (Bistable Electrical contacts)-(two electrical signals)
Ⓒ	ELECTRICAL CONTACTS
	4 = Quick connection for tube Ø4
	6 = Quick connection for tube Ø6
	8 = Quick connection for tube Ø8
Ⓥ	VOLTAGE
	02 = 24 VDC PNP
	12 = 24 VDC NPN

SHORT CODE A4
SHORT CODE A6
SHORT CODE A8
SHORT CODE P4 (CEB)
SHORT CODE P6 (CEB)
SHORT CODE P8 (CEB)

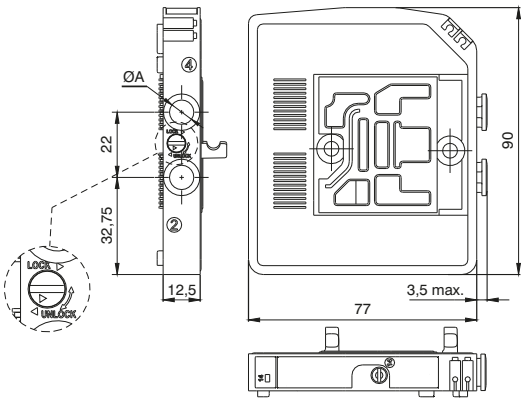

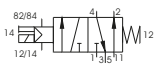

Weight 115 g

Solenoid - Solenoid (Bistable)

Coding: 230Ⓒ.52.00.35.Ⓥ

Operational characteristics	
Fluid	Filtered air. No lubrication needed, if applied it shall be continuous
Working pressure (bar)	From vacuum to 10
Pressure range (bar)	2,5 ÷ 7
Temperature °C	-5 ÷ +50
Flow rate at 6 bar with Δp=1 (Nl/min)	700
Responce time according to ISO 12238, activation time (ms)	7
Responce time according to ISO 12238, deactivation time (ms)	7

Shifting time of pneumatic directional control valves or moving parts, logic devices were measured in accordance to ISO 12238:2001

Ⓒ	ELECTRICAL CONTACTS
	4 = Quick connection for tube Ø4
	6 = Quick connection for tube Ø6
	8 = Quick connection for tube Ø8
Ⓥ	VOLTAGE
	02 = 24 VDC PNP
	12 = 24 VDC NPN

SHORT CODE C4
SHORT CODE C6
SHORT CODE C8

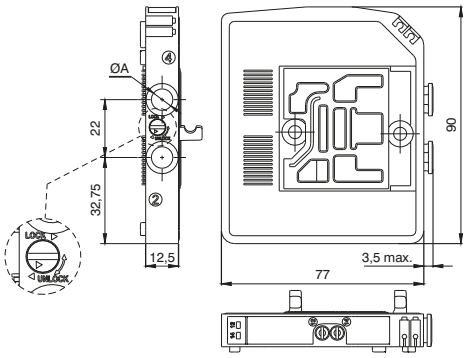

Weight 115 g

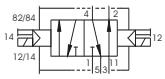

Solenoid - Solenoid (Bistable-Closed centres)

Coding: 230Ⓒ.53.31.35.Ⓥ

Operational characteristics	
Fluid	Filtered air. No lubrication needed, if applied it shall be continuous
Working pressure (bar)	From vacuum to 10
Pressure range (bar)	2,5 ÷ 7
Temperature °C	-5 ÷ +50
Flow rate at 6 bar with Δp=1 (Nl/min)	550
Responce time according to ISO 12238, activation time (ms)	15
Responce time according to ISO 12238, deactivation time (ms)	15

Shifting time of pneumatic directional control valves or moving parts, logic devices were measured in accordance to ISO 12238:2001

Ⓒ	ELECTRICAL CONTACTS
	4 = Quick connection for tube Ø4
	6 = Quick connection for tube Ø6
	8 = Quick connection for tube Ø8
Ⓥ	VOLTAGE
	02 = 24 VDC PNP
	12 = 24 VDC NPN

SHORT CODE E4
SHORT CODE E6
SHORT CODE E8

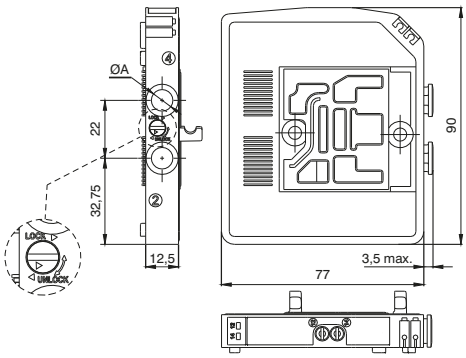

Weight 130 g

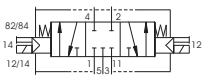

Overall dimensions and technical information are provided solely for informative purposes and may be modified without notice

Solenoid - Solenoid 2x3/2 Bistable-N.C.-N.C. (=5/3 Open centres)

Coding: 230Ⓒ.62.44.35.Ⓥ

Ⓒ	ELECTRICAL CONTACTS
	4 = Quick connection for tube Ø4
	6 = Quick connection for tube Ø6
	8 = Quick connection for tube Ø8
Ⓥ	VOLTAGE
	02 = 24 VDC PNP
	12 = 24 VDC NPN

SHORT CODE F4
SHORT CODE F6
SHORT CODE F8

Operational characteristics	
Fluid	Filtered air. No lubrication needed, if applied it shall be continuous
Working pressure (bar)	From vacuum to 10
Pressure range (bar)	2,5 ÷ 7
Temperature °C	-5 ÷ +50
Flow rate at 6 bar with Δp=1 (Nl/min)	700
Responce time according to ISO 12238, activation time (ms)	9
Responce time according to ISO 12238, deactivation time (ms)	30

Shifting time of pneumatic directional control valves or moving parts, logic devices were measured in accordance to ISO 12238:2001

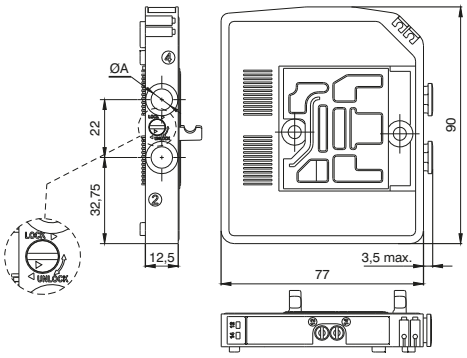

Weight 130 g
5/3 Open Centres: Use the Solenoid valves with 2x3/2 N.C.-N.C. function
5/3 Pressured Centres: Use the Solenoid valves with 2x3/2 N.O.-N.O. function

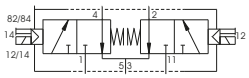

Solenoid - Solenoid 2x3/2 Bistable-N.C.-N.O.

Coding: 230Ⓒ.62.45.35.Ⓥ

Ⓒ	ELECTRICAL CONTACTS
	4 = Quick connection for tube Ø4
	6 = Quick connection for tube Ø6
	8 = Quick connection for tube Ø8
Ⓥ	VOLTAGE
	02 = 24 VDC PNP
	12 = 24 VDC NPN

SHORT CODE H4
SHORT CODE H6
SHORT CODE H8

Operational characteristics	
Fluid	Filtered air. No lubrication needed, if applied it shall be continuous
Working pressure (bar)	From vacuum to 10
Pressure range (bar)	2,5 ÷ 7
Temperature °C	-5 ÷ +50
Flow rate at 6 bar with Δp=1 (Nl/min)	700
Responce time according to ISO 12238, activation time (ms)	9
Responce time according to ISO 12238, deactivation time (ms)	30

Shifting time of pneumatic directional control valves or moving parts, logic devices were measured in accordance to ISO 12238:2001

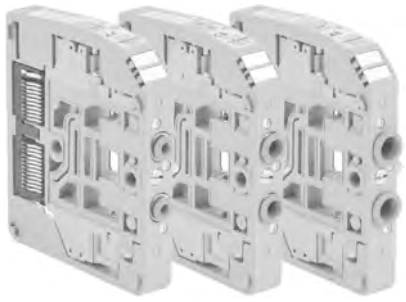

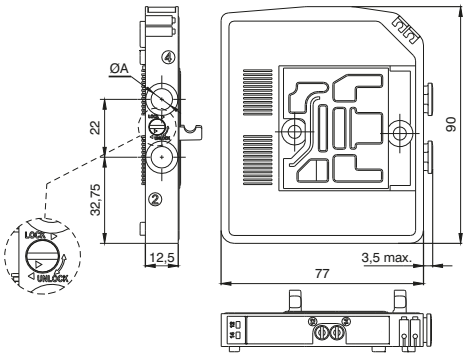

Weight 130 g
5/3 Open Centres: Use the Solenoid valves with 2x3/2 N.C.-N.C. function
5/3 Pressured Centres: Use the Solenoid valves with 2x3/2 N.O.-N.O. function

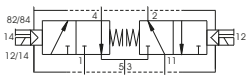

Solenoid - Solenoid 2x3/2 Bistable-N.O.-N.O. (=5/3 Pressured centres)

Coding: 230Ⓒ.62.55.35.Ⓥ

Ⓒ	ELECTRICAL CONTACTS
	4 = Quick connection for tube Ø4
	6 = Quick connection for tube Ø6
	8 = Quick connection for tube Ø8
Ⓥ	VOLTAGE
	02 = 24 VDC PNP
	12 = 24 VDC NPN

SHORT CODE G4
SHORT CODE G6
SHORT CODE G8

Operational characteristics	
Fluid	Filtered air. No lubrication needed, if applied it shall be continuous
Working pressure (bar)	From vacuum to 10
Pressure range (bar)	2,5 ÷ 7
Temperature °C	-5 ÷ +50
Flow rate at 6 bar with Δp=1 (Nl/min)	700
Responce time according to ISO 12238, activation time (ms)	9
Responce time according to ISO 12238, deactivation time (ms)	30

Shifting time of pneumatic directional control valves or moving parts, logic devices were measured in accordance to ISO 12238:2001

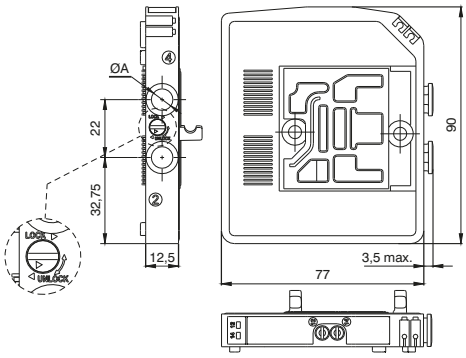

Weight 130 g
5/3 Open Centres: Use the Solenoid valves with 2x3/2 N.C.-N.C. function
5/3 Pressured Centres: Use the Solenoid valves with 2x3/2 N.O.-N.O. function

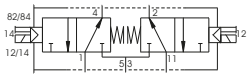

Solenoid - Solenoid 2x2/2 Bistable-N.C.-N.C.

Coding: 230Ⓒ.42.44.35.Ⓥ

Ⓒ	ELECTRICAL CONTACTS
	4 = Quick connection for tube Ø4
	6 = Quick connection for tube Ø6
	8 = Quick connection for tube Ø8
Ⓥ	VOLTAGE
	02 = 24 VDC PNP
	12 = 24 VDC NPN

SHORT CODE L4
SHORT CODE L6
SHORT CODE L8

Operational characteristics	
Fluid	Filtered air. No lubrication needed, if applied it shall be continuous
Working pressure (bar)	From vacuum to 10
Pressure range (bar)	2,5 ÷ 7
Temperature °C	-5 ÷ +50
Flow rate at 6 bar with Δp=1 (Nl/min)	700
Responce time according to ISO 12238, activation time (ms)	9
Responce time according to ISO 12238, deactivation time (ms)	30

Shifting time of pneumatic directional control valves or moving parts, logic devices were measured in accordance to ISO 12238:2001

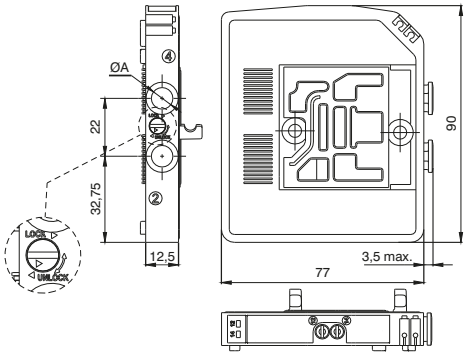

Weight 130 g

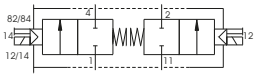

Overall dimensions and technical information are provided solely for informative purposes and may be modified without notice

Solenoid - Solenoid 2x2/2 Bistable-N.C.-N.O.

Coding: 230Ⓒ.42.45.35.Ⓥ

Operational characteristics	
Fluid	Filtered air. No lubrication needed, if applied it shall be continuous
Working pressure (bar)	From vacuum to 10
Pressure range (bar)	2,5 ÷ 7
Temperature °C	-5 ÷ +50
Flow rate at 6 bar with Δp=1 (Nl/min)	700
Responce time according to ISO 12238, activation time (ms)	9
Responce time according to ISO 12238, deactivation time (ms)	30

Shifting time of pneumatic directional control valves or moving parts, logic devices were measured in accordance to ISO 12238:2001

Ⓒ	ELECTRICAL CONTACTS
	4 = Quick connection for tube Ø4
	6 = Quick connection for tube Ø6
	8 = Quick connection for tube Ø8
Ⓥ	VOLTAGE
	02 = 24 VDC PNP
	12 = 24 VDC NPN

SHORT CODE N4
SHORT CODE N6
SHORT CODE N8

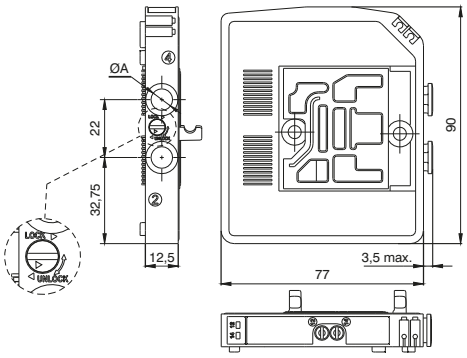

Weight 130 g

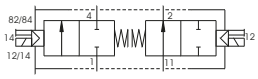

Solenoid - Solenoid 2x2/2 Bistable-N.O.-N.O.

Coding: 230Ⓒ.42.55.35.Ⓥ

Operational characteristics	
Fluid	Filtered air. No lubrication needed, if applied it shall be continuous
Working pressure (bar)	From vacuum to 10
Pressure range (bar)	2,5 ÷ 7
Temperature °C	-5 ÷ +50
Flow rate at 6 bar with Δp=1 (Nl/min)	700
Responce time according to ISO 12238, activation time (ms)	9
Responce time according to ISO 12238, deactivation time (ms)	30

Shifting time of pneumatic directional control valves or moving parts, logic devices were measured in accordance to ISO 12238:2001

Ⓒ	ELECTRICAL CONTACTS
	4 = Quick connection for tube Ø4
	6 = Quick connection for tube Ø6
	8 = Quick connection for tube Ø8
Ⓥ	VOLTAGE
	02 = 24 VDC PNP
	12 = 24 VDC NPN

SHORT CODE M4
SHORT CODE M6
SHORT CODE M8

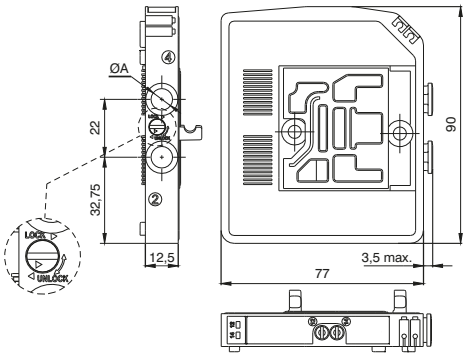

Weight 130 g

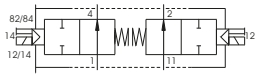

Left Endplates

Coding: 2311.BC

Operational characteristics	
Fluid	Filtered air. No lubrication needed, if applied it shall be continuous
Working pressure (bar)	From vacuum to 10
Pressure range (bar)	2,5 ÷ 7
Temperature °C	-5 ÷ +50

B	PORTS
	05 = 5 ports
	03 = 3 ports
C	CONNECTIONS
	P = Electrical connection PNP
	N = Electrical connection NPN

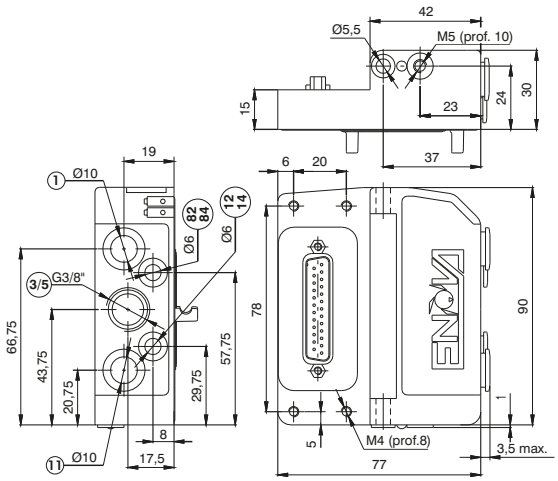

Weight 190 g
1/11 Conduit (tube ø10): Main Solenoid valve feeding (pressure from vacuum to 10 bar maximum)
3/5 Conduit (G 3/8"): Main Solenoid valve exhaust

2311.05C

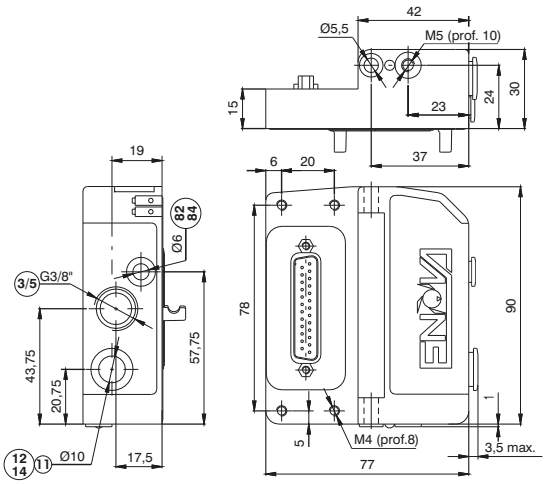

Weight 185 g
1/11-12/14 Conduit (tube ø10): Main Solenoid valve and pilot feeding (pressure from 2,5bar to 7 bar)
3/5 Conduit (G 3/8"): Main Solenoid valve exhaust
82/84 Conduit (tube ø6): Pilot exhaust

2311.03C

Right Endplates closed

Coding: 2312.00

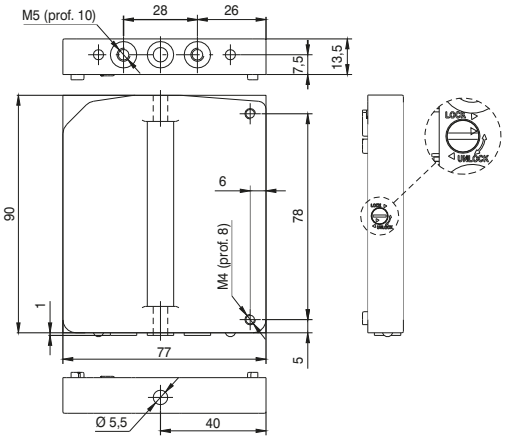

Weight 100 g

Overall dimensions and technical information are provided solely for informative purposes and may be modified without notice

Intermediate Inlet/Exhaust module

Coding: 2308.Ⓕ

Ⓕ	FUNCTION
	08 = Exhaust module
	12 = Inlet module
	20 = Inlet-Exhaust module

SHORT CODE J
SHORT CODE K
SHORT CODE W

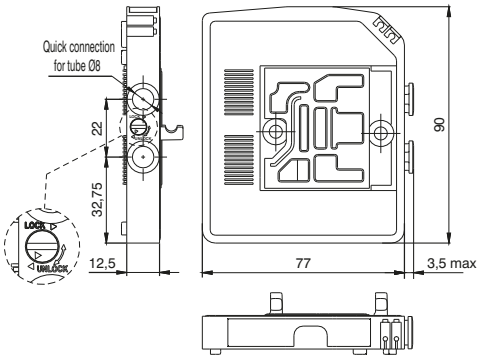

Weight 5 g

Through module

Coding: 2300.Ⓕ

Ⓕ	FUNCTION
	01 = 1 electric signal module
	02 = 2 electric signals module

SHORT CODE T1
SHORT CODE T2

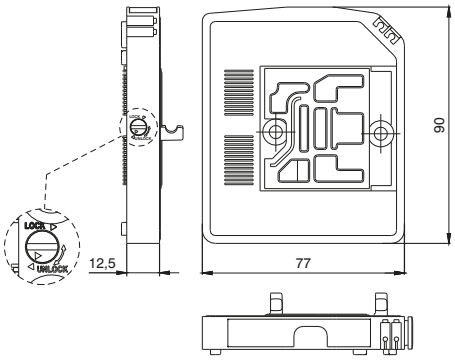

Weight 90 g

DIN rail adapter

Coding: 2300.16

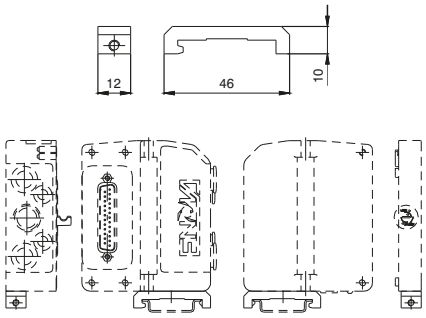

Weight 12 g

Fixing brackets

Coding: 2300.50

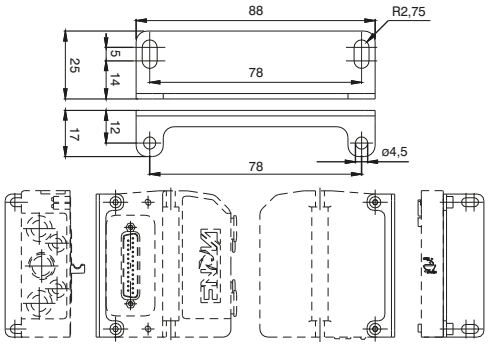

Weight 45 g
for fixing dimensions see the Left endplates 3 and 5 ports

Exhaust Diaphragm

Coding: 2317.08

Weight 5 g
SHORT CODE Y

Inlet/Exhaust Diaphragm

Coding: 2317.20

Weight 5 g
SHORT CODE Z

Inlet Diaphragm

Coding: 2317.12

Weight 5 g
SHORT CODE X

Cable complete with connector, 25 Poles IP65

Coding: 2300.25.Ⓛ.Ⓒ

Ⓛ	CABLE LENGTH
	03 = 3 meters
	05 = 5 meters
	10 = 10 meters
Ⓒ	CONNECTOR
	10 = In line
	90 = 90° Angle

Overall dimensions and technical information are provided solely for informative purposes and may be modified without notice

The electrical connection is achieved via a 25 pin connector and can manage up to 22 solenoid pilots.

The management and distribution of the electrical signals between each valve is obtained thanks to a patented electrical connector which receives the signals from the previous module, uses one, two or none depending on the type, and carries forward to the next module the remaining. Bistable valves, 5/3 ; 2X3/2 e 2X2/2 valves which have two solenoid pilots built in, use two signals; the first is directed to the pilot side 14 the second to the pilot side 12.
Mono-stable valves can be fitted with two type of electrical connector: one that uses only one signal (connected to the pilot side 14) and carries forward the remaining and one called CEB (Electrical contact for bistable) which uses two signals, one is needed for the valve the other is not used.
This second solution (CEB) allows the modification of the manifold (replacement of monostable valves with bistable for example) without the need of reconfiguring the PLC outputs layout. On the other hand this solution limits the maximum number of valves to 11 (two signals for each position).
Intermediate supply / exhaust modules are fitted with a dedicated electrical connector which carries forward all electric signals without using any. This allows the use of intermediate modules in any position of the manifold.

Example of manifold samples with the corresponding pin layout.

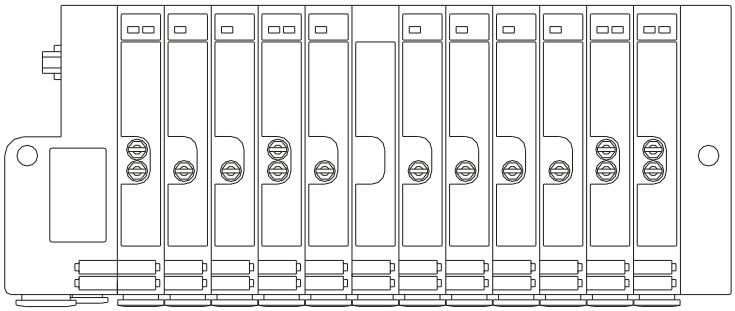

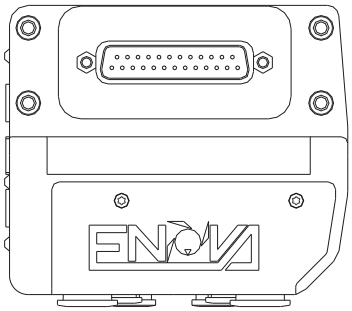

ELECTRIC CONNECTOR
SUB-D TYPE - 25 POLES

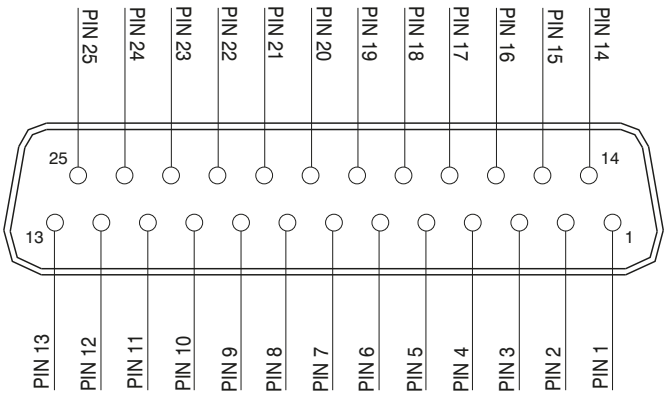

1 - 22 = Solenoid valves signals
23 - 24 - 25 = Common

25 PIN Connector correspondence for bistable, 2x3/2, 5/3 and standard monostable valves manifold

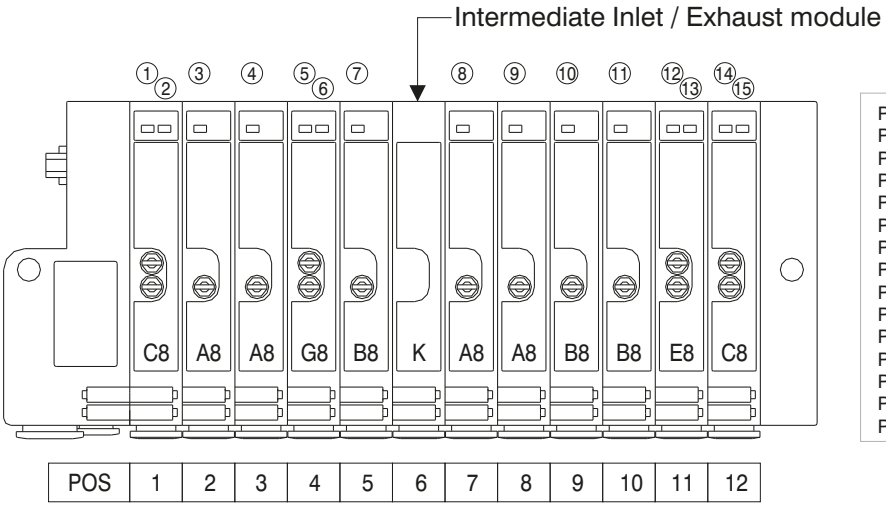

PIN 1 = PILOT 14 SV POS.1
PIN 2 = PILOT 12 SV POS.1
PIN 3 = PILOT 14 SV POS.2
PIN 4 = PILOT 14 SV POS.3
PIN 5 = PILOT 14 SV POS.4
PIN 6 = PILOT 12 SV POS.4
PIN 7 = PILOT 14 SV POS.5
PIN 8 = PILOT 14 SV POS.7
PIN 9 = PILOT 14 SV POS.8
PIN 10 = PILOT 14 SV POS.9
PIN 11 = PILOT 14 SV POS.10
PIN 12 = PILOT 14 SV POS.11
PIN 13 = PILOT 12 SV POS.11
PIN 14 = PILOT 14 SV POS.12
PIN 15 = PILOT 12 SV POS.12

25 PIN Connector correspondence for bistable, 2x3/2, 5/3 manifold and CEB monostable valves (electrical contact for bistable)

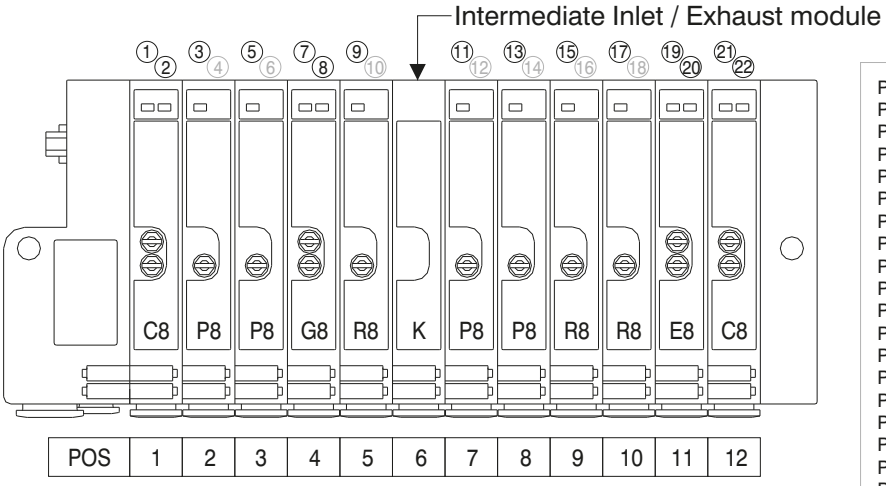

PIN 1 = PILOT 14 SV POS.1
PIN 2 = PILOT 12 SV POS.1
PIN 3 = PILOT 14 SV POS.2
PIN 4 = NOT CONNECTED
PIN 5 = PILOT 14 SV POS.3
PIN 6 = NOT CONNECTED
PIN 7 = PILOT 14 SV POS.4
PIN 8 = PILOT 12 SV POS.4
PIN 9 = PILOT 14 SV POS.5
PIN 10 = NOT CONNECTED
PIN 11 = PILOT 14 SV POS.7
PIN 12 = NOT CONNECTED
PIN 13 = PILOT 14 SV POS.8
PIN 14 = NOT CONNECTED
PIN 15 = PILOT 14 SV POS.9
PIN 16 = NOT CONNECTED
PIN 17 = PILOT 14 SV POS.10
PIN 18 = NOT CONNECTED
PIN 19 = PILOT 14 SV POS.11
PIN 20 = PILOT 12 SV POS.11
PIN 21 = PILOT 14 SV POS.12
PIN 22 = PILOT 12 SV POS.12

25 PIN Connector correspondence for manifold for 22 position manifold with standard monostable valves

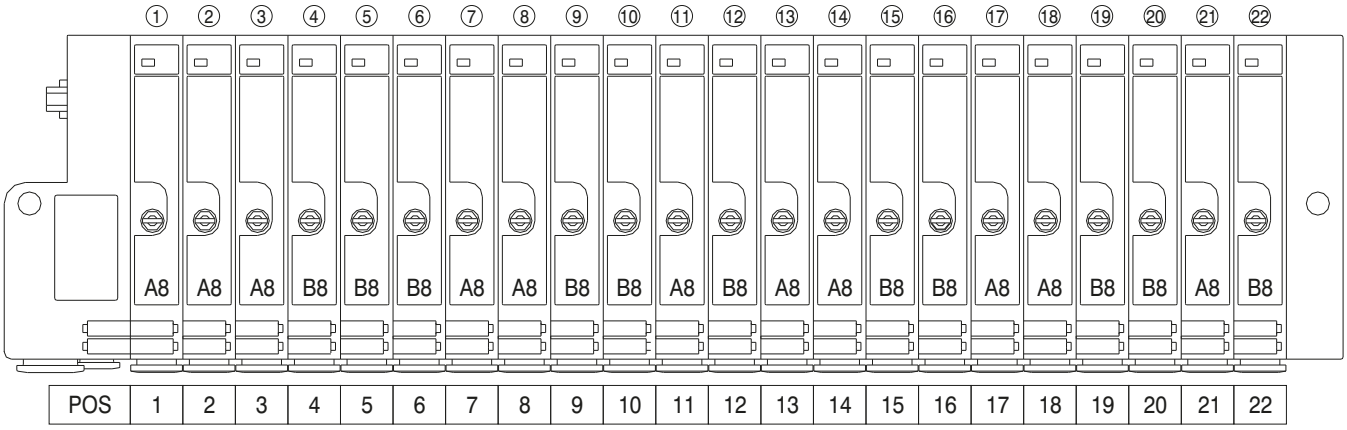

Overall dimensions and technical information are provided solely for informative purposes and may be modified without notice

Mounting

From the top

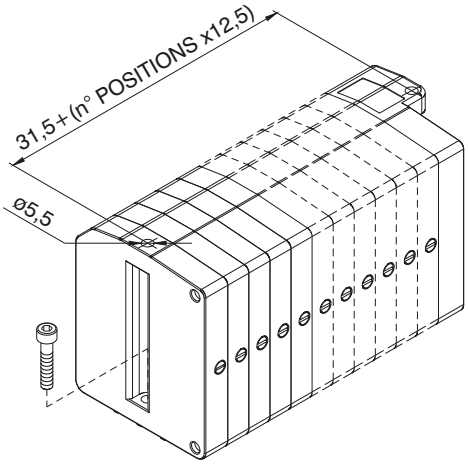

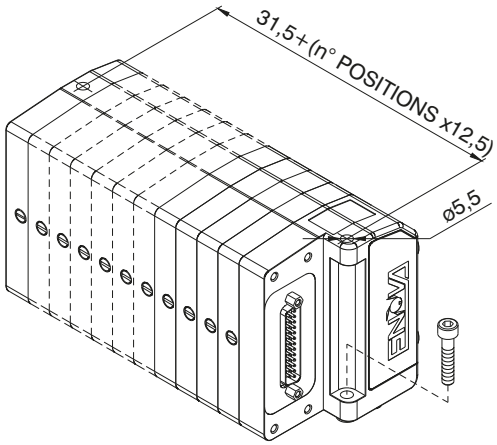

From the bottom

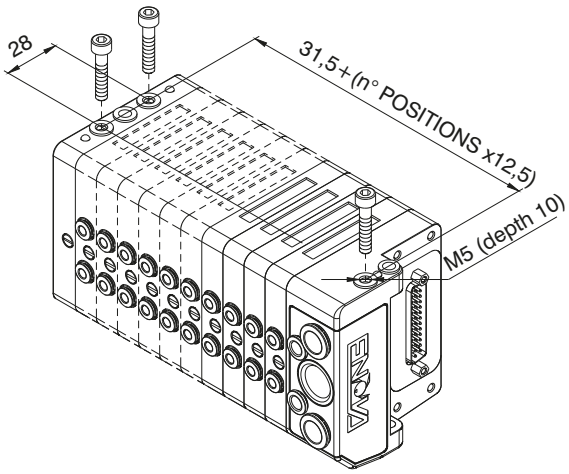

On DIN rail

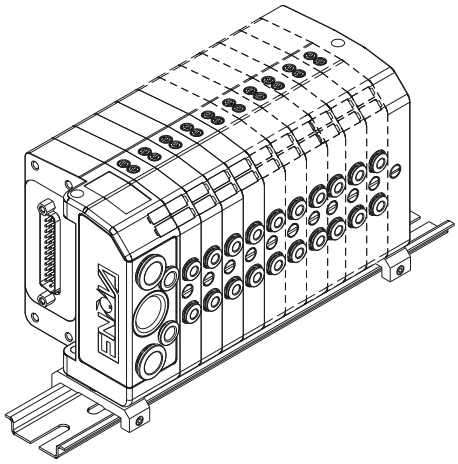

90° Bracket

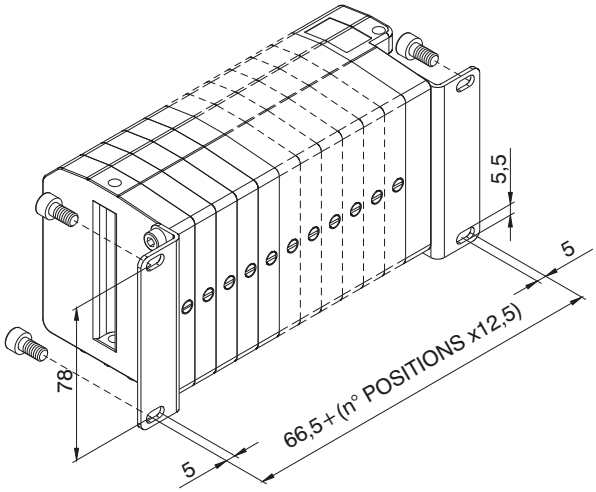

Maximum envelop size based
on the number of positions

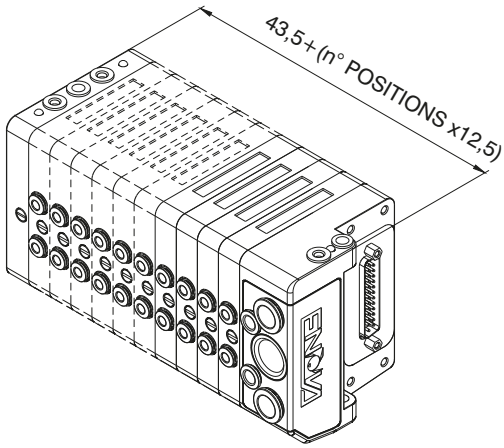

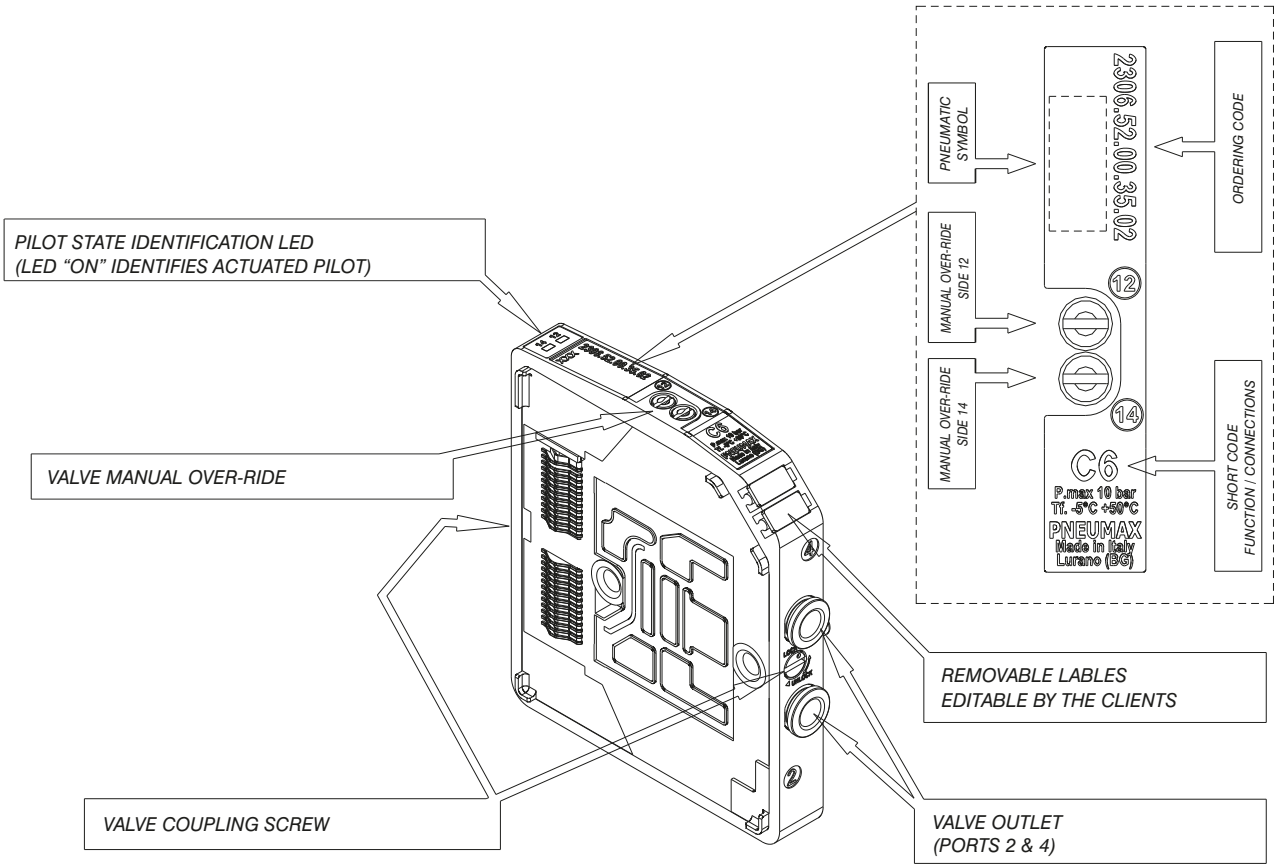

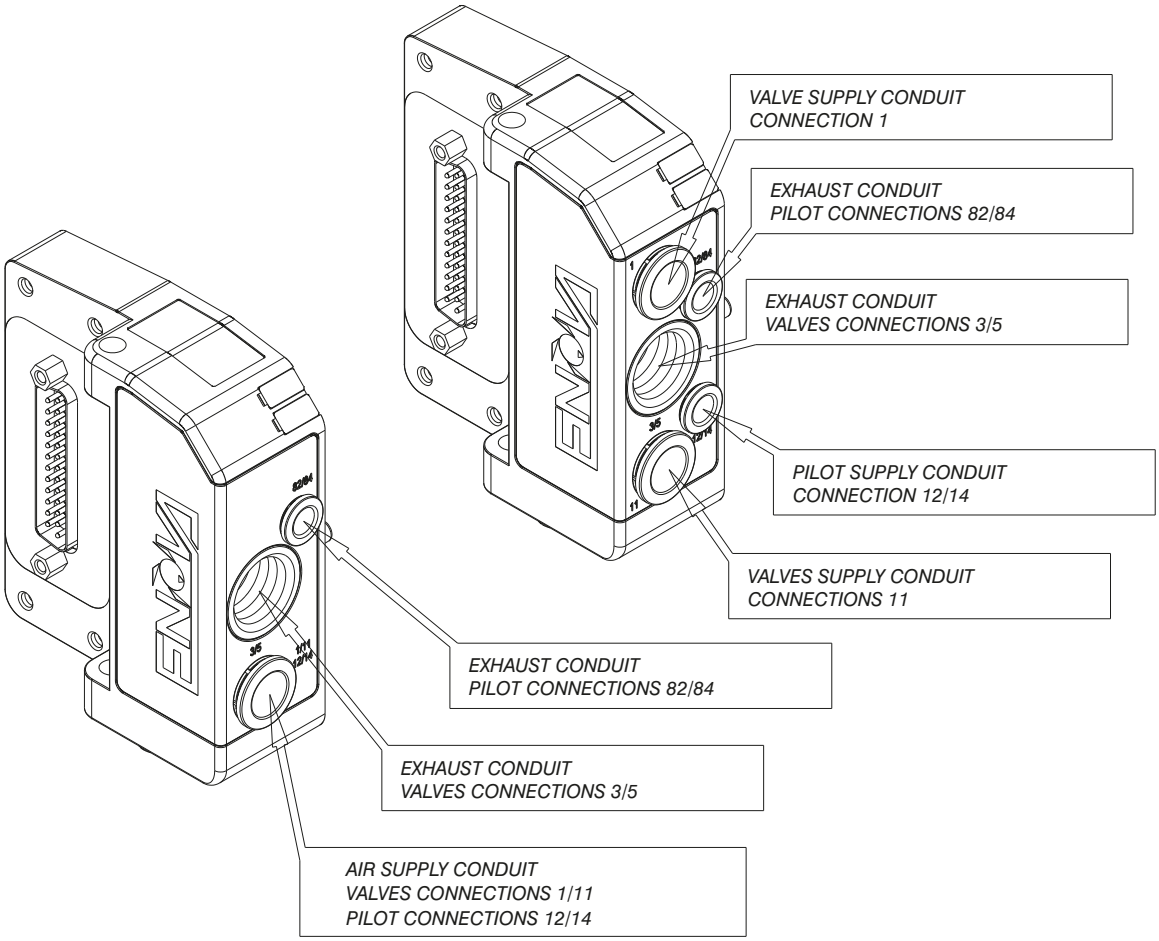

Overall dimensions and technical information are provided solely for informative purposes and may be modified without notice

Manual over-ride function

Unstable function

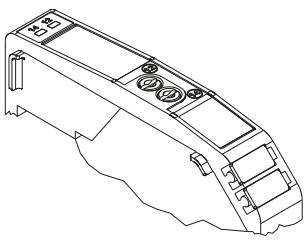

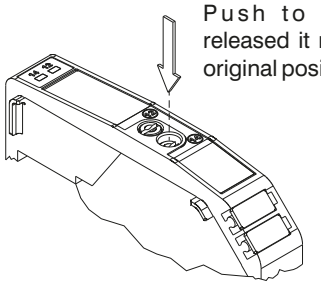

Push to actuate (when released it moves back to the original position)

1 Push and turn to get the bistable function

2

Bistable function

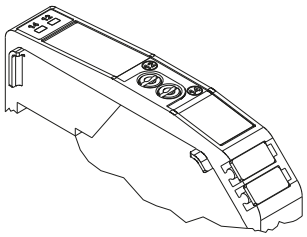

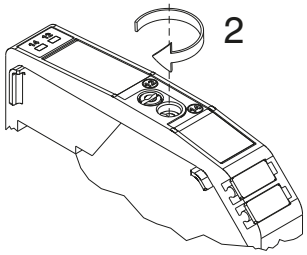

NOTE: It is strongly suggested to replace the original position after using

Manifold assembly

The assembly procedure should start from the end-plate which should be positioned on a flat surface. Add the requested modules by simply rotating by 180° the fastening pins by means of a 1x5.5 flat screw driver. The last module to be assembles shall be the inlet module

Fastening pins rotation direction:
- To lock: rotate anticlockwise (in the direction of the LOCK print on the case)
- To unlock: rotate clockwise (in the direction of the UNLOCK print on the case)

The same procedure shall be used to add or remove any module.

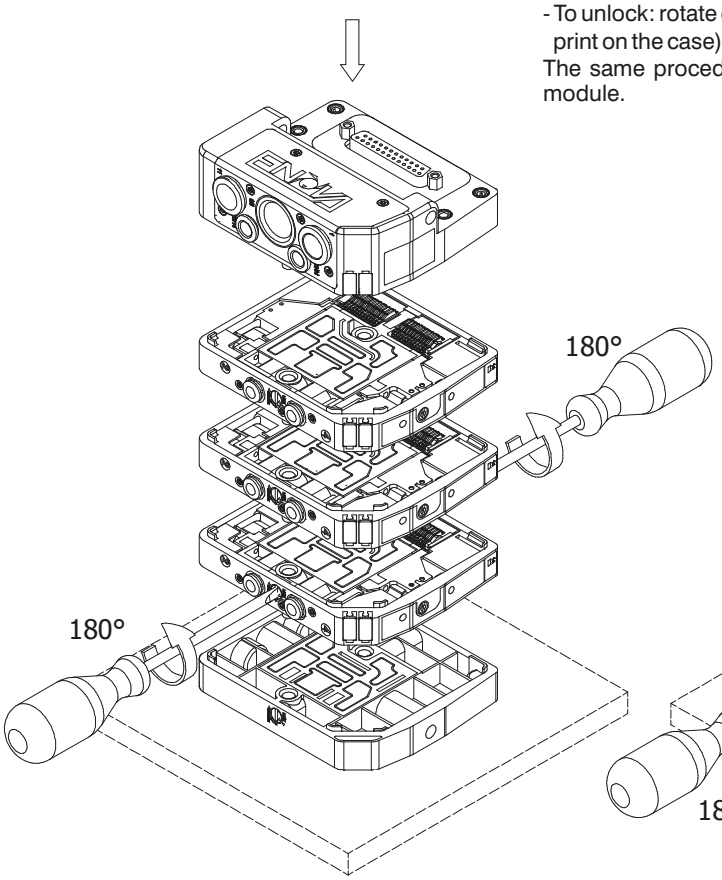

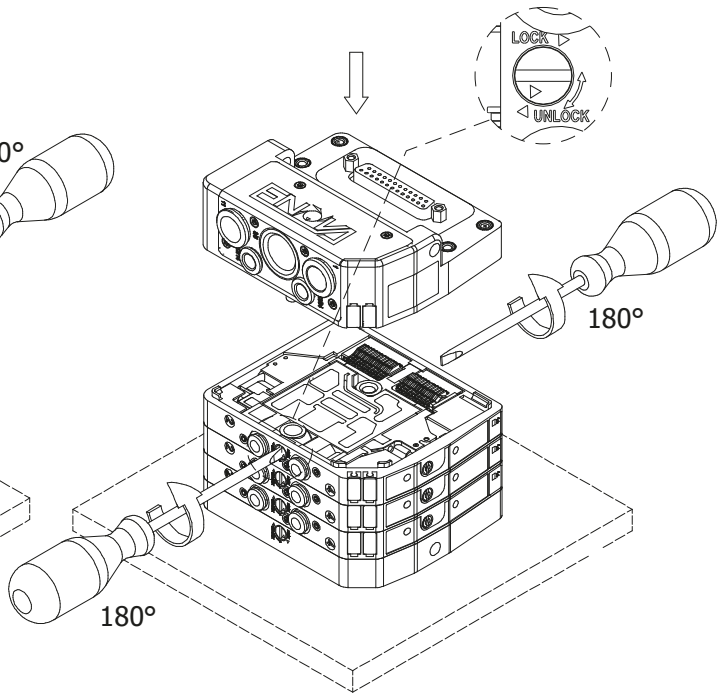

Manifold Lay-Out configuration

E __ . __ . __ . __ __ __ __ __ __ __ __ __ __ __ __ __

ACCESSORIES :
0= none
D= DIN bar adapter
S= 90° Fixing bracket

ENDPLATES SELECTION :
A= 5 ports endplated left side plus right side endplated
B= 3 ports endplated left side plus right side endplated

ELECTRICAL CONNECTION:
MP= MULTIPOLAR PNP (standard)
MN= MULTIPOLAR NPN
CA= CANopen® 22 OUT
CB= CANopen® 22 OUT + 8 IN
CC= CANopen® 22 OUT + 16 IN
CD= CANopen® 22 OUT + 24 IN
DA= DeviceNet 22 OUT
DB= DeviceNet OUT + 8 IN
DC= DeviceNet 22 OUT + 16 IN
DD= DeviceNet OUT + 24 IN
PA= PROFIBUS 22 OUT
PB= PROFIBUS 22 OUT + 8 IN
PC= PROFIBUS 16 OUT + 16 IN

SHORT CODE
FUNCTION / CONNECTION:
A4= SV 5/2 MONOST. SOL.-SPRING Ø4
A6= SV 5/2 MONOST. SOL.-SPRING Ø6
A8= SV 5/2 MONOST. SOL.-SPRING Ø8
B4= SV 5/2 MONOST. SOL.-DIFFERENTIAL Ø4
B6= SV 5/2 MONOST. SOL.-DIFFERENTIAL Ø6
B8= SV 5/2 MONOST. SOL.-DIFFERENTIAL Ø8
C4= SV 5/2 BISTABLE SOL.-SOL. Ø4
C6= SV 5/2 BISTABLE SOL.-SOL. Ø6
C8= SV 5/2 BISTABLE SOL.-SOL. Ø8
E4= SV 5/3 CC SOL.-SOL. Ø4
E6= SV 5/3 CC SOL.-SOL. Ø6
E8= SV 5/3 CC SOL.-SOL. Ø8
F4= SV 2x3/2 NC-NC (= 5/3 CA) SOL.-SOL. Ø4
F6= SV 2x3/2 NC-NC (= 5/3 CA) SOL.-SOL. Ø6
F8= SV 2x3/2 NC-NC (= 5/3 CA) SOL.-SOL. Ø8
G4= SV 2x3/2 NO-NO (= 5/3 CP) SOL.-SOL. Ø4
G6= SV 2x3/2 NO-NO (= 5/3 CP) SOL.-SOL. Ø6
G8= SV 2x3/2 NO-NO (= 5/3 CP) SOL.-SOL. Ø8
H4= SV 2x3/2 NC-NO SOL.-SOL. Ø4
H6= SV 2x3/2 NC-NO SOL.-SOL. Ø6
H8= SV 2x3/2 NC-NO SOL.-SOL. Ø8
L4= SV 2x2/2 NC-NC SOL.-SOL. Ø4
L6= SV 2x2/2 NC-NC SOL.-SOL. Ø6
L8= SV 2x2/2 NC-NC SOL.-SOL. Ø8
M4= SV 2x2/2 NO-NO SOL.-SOL. Ø4
M6= SV 2x2/2 NO-NO SOL.-SOL. Ø6
M8= SV 2x2/2 NO-NO SOL.-SOL. Ø8
N4= SV 2x2/2 NC-NO SOL.-SOL. Ø4
N6= SV 2x2/2 NC-NO SOL.-SOL. Ø6
N8= SV 2x2/2 NC-NO SOL.-SOL. Ø8
P4= SV 5/2 MONOST. SOL.-SPRING CEB Ø4
P6= SV 5/2 MONOST. SOL.-SPRING CEB Ø6
P8= SV 5/2 MONOST. SOL.-SPRING CEB Ø8
R4= SV 5/2 MONOST. SOL.-DIFF. CEB Ø4
R6= SV 5/2 MONOST. SOL.-DIFF. CEB Ø6
R8= SV 5/2 MONOST. SOL.-DIFF. CEB Ø8
T1 = 1 ELECTRIC SIGNAL THROUGH MODULE
T2 = 2 ELECTRIC SIGNALS THROUGH MODULE

J= INTERMEDIATE EXHAUST MODULE Ø8
K= INTERMEDIATE INLET MODULE Ø8
W = INLET-EXHAUST MODULE Ø8

X= INLET DIAPHRAGM
Y= EXHAUST DIAPHRAGM
Z= INLET -EXHAUST DIAPHRAGM

NOTE:
While configuring the manifold always bear in mind that the maximum number of electrical signals available is 22.
N.B. CEB = Electrical connector for bistable valves (uses two electric signals)
Intermediate supply / exhaust modules require the same space as a valve but do not use any electric signals (as the electric connector carries forward all signals received from the module immediately before).
The separation diaphragms are positioned between two modules and replace the standard seal therefore do not increase the dimension of the assembly. When using a separation diaphragm of any type, it is necessary to add, in any position between diaphragm and the manifold and plate, an extra air supply / exhaust module depending on the type of diaphragm used.

Overall dimensions and technical information are provided solely for informative purposes and may be modified without notice

General:

CANopen® module is directly integrated on Enova solenoid valves manifold via a 25 poles connector, normally used for multipolar cable connection.
Enova solenoid valves connected to node must be PNP equivalent (final 02 in ordering code).
The node can be easily installed also on solenoid valves manifold already mounted on equipment.
Module can manage up to 22 solenoid valves, and, in the same time, a max number of 3 Input modules 5200.08.
CANopen® module recognizes automatically the presence of the Input modules on power on.
Regardless of the number of Input modules connected, the managable solenoid valves are 22.
Node power supply is made by a M12 4P male circular connector.
The separation between node 24 VDC Power supply and outputs 24 VDC allows to switch off the outputs maintaning powered the node and inputs, if present.
Connection to Bus CANopen® is possible via 2 M12 5P male - female circular connectors; these two are connected in parallel and according to CiA Draft Standard Proposal 301 V 4.10 (15 August 2006).
Transmission speed can be set by 3 dip-switches.
The node address can be set by 6 dip-switches using BCD numeration.
The module includes an internal terminating resistance that can be activated by a dip-switch.

Ordering code

5523.22

Scheme / Overall dimensions and I/O layout :

POWER SUPPLY connector

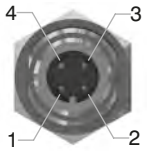

M12 4P MALE

PIN	DESCRIPTION
1	+24 VDC (NODE & INPUTS)
2	NC
3	GND
4	+24 VDC (OUTPUTS)

NETWORK connectors

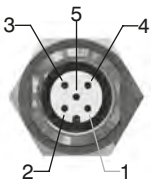

M12 5P FEMALE

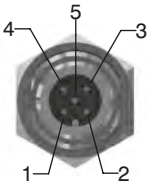

M12 5P MALE

PIN	SIGNAL	DESCRIPTION
1	CAN_SHLD	Optional CAN Shield
2	CAN_V+	Optional CAN external positive supply (Dedicated for supply of transceiver and Optocouplers, if galvanic isolation of the bus node applies)
3	CAN_GND	Ground / 0V / V-
4	CAN_H	CAN_H bus line (dominant high)
5	CAN_L	CAN_L bus line (dominant low)

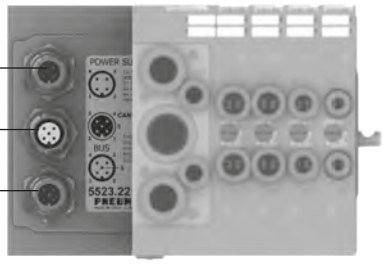

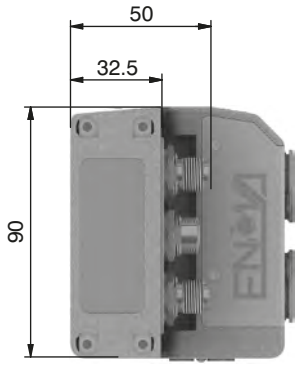

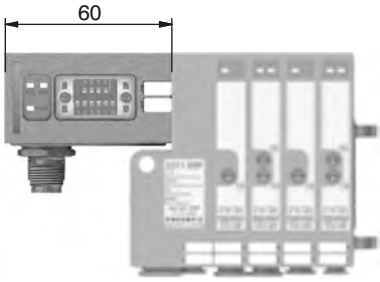

Technical characteristics

	Model	5523.22
	Specifications	CiA Draft Standard Proposal 301 V 4.10 (15 August 2006)
	Case	Reinforced technopolymer
Power supply	Power supply connection	M12 4P male connector (IEC 60947-5-2)
	Power supply voltage	+24 VDC +/- 10%
	Node consumption (without inputs)	25 mA
	Power supply diagnosis	Green led PWR
Outputs	PNP equivalent outputs	+24 VDC +/- 10%
	Maximum current for output	100 mA
	Maximum output number	22
	Max output simultaneously actuated	22
Network	Network connectors	2 M12 5P connectors male-female (IEC 60947-5-2)
	Baud rate	10 - 20 - 50 - 125 - 250 - 500 - 800 - 1000 Kbit/s
	Addresses, possibile numbers	From 1 to 63
	Max nodes in net	64 (slave + master)
	Bus maximum recommended length	100 m a 500 Kbit/s
	Bus diagnosis	Green led + Red led
	Configuration file	Available from our web site: http://www.pneumaxspa.com
	IP protection grade	IP65 when assembled
	Temperature range	From -0° to +50° C

General:

DeviceNet module is directly integrated on Enova solenoid valves manifold via a 25 poles connector, normally used for multipolar cable connection.
Enova solenoid valves connected to node must be PNP equivalent (final 02 in ordering code).
The node can be easily installed also on solenoid valves manifold already mounted on equipment.
Module can manage up to 22 solenoid valves, and, in the same time, a max number of 3 Input modules 5200.08.
DeviceNet module recognizes automatically the presence of the Input modules on power on.
Regardless of the number of Input modules connected, the managable solenoid valves are 22.
Node power supply is made by a M12 4P male circular connector.
The separation between node 24 VDC Power supply and outputs 24 VDC allows to switch off the outputs maintaning powered the node and inputs, if present.
Connection to Bus DeviceNet is possible via 2 M12 5P male - female circular connectors; these two are connected in parallel and according to DeviceNet Specifications Volume I, release 2.0.
Transmission speed can be set by 3 dip-switches.
The node address can be set by 6 dip-switches using BCD numeration.
The module includes an internal terminating resistance that can be activated by a dip-switch.

Ordering code

5423.22

Scheme / Overall dimensions and I/O layout :

POWER SUPPLY connector

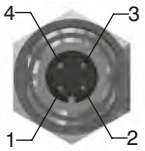

M12 4P MALE

PIN	DESCRIPTION
1	+24 VDC (NODE & INPUTS)
2	NC
3	GND
4	+24 VDC (OUTPUTS)

NETWORK connectors

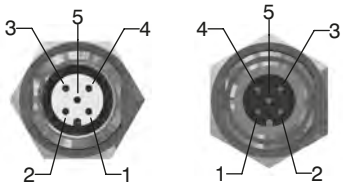

M12 5P FEMALE M12 5P MALE

PIN	SIGNAL	DESCRIPTION
1	CAN_SHLD	Optional CAN Shield
2	CAN_V+	Optional CAN external positive supply (Dedicated for supply of transceiver and Optocouplers, if galvanic isolation of the bus node applies)
3	CAN_GND	Ground / 0V / V-
4	CAN_H	CAN_H bus line (dominant high)
5	CAN_L	CAN_L bus line (dominant low)

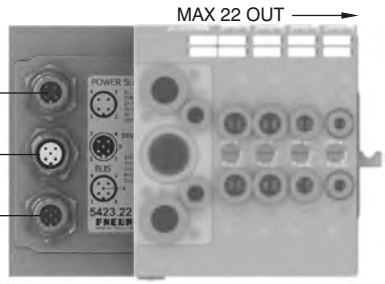

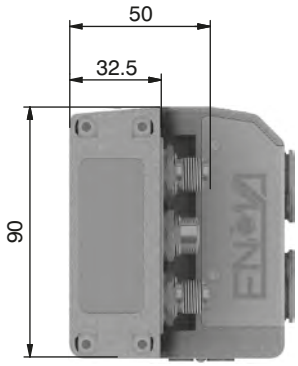

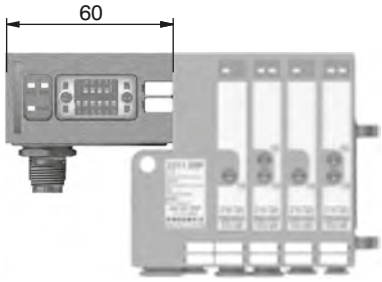

Technical characteristics

	Model	5423.22
	Specifications	DeviceNet Specifications Volume I, release 2.0.
	Case	Reinforced technopolymer
Power supply	Power supply connection	M12 4P male connector (IEC 60947-5-2)
	Power supply voltage	+24 VDC +/- 10%
	Node consumption (without inputs)	25 mA
	Power supply diagnosis	Green led PWR
Outputs	PNP equivalent outputs	+24 VDC +/- 10%
	Maximum current for output	100 mA
	Maximum output number	22
	Max output simultaneously actuated	22
Network	Network connectors	2 M12 5P connectors male-female (IEC 60947-5-2)
	Baud rate	125 - 250 - 500 Kbit/s
	Addresses, possibile numbers	From 1 to 63
	Max nodes in net	64 (slave + master)
	Bus maximum recommended length	100 m a 500 Kbit/s
	Bus diagnosis	Green led + Red led
	Configuration file	Available from our web site: http://www.pneumaxspa.com
	IP protection grade	IP65 when assembled
	Temperature range	From -0° to +50° C

Overall dimensions and technical information are provided solely for informative purposes and may be modified without notice

General:

PROFIBUS DP module is directly integrated on Enova solenoid valves manifold via a 25 poles connector, normally used for multipolar cable connection.
Enova solenoid valves connected to node must be PNP equivalent (final 02 in ordering code).
The node can be easily installed also on solenoid valves manifold already mounted on equipment.
Module can manage up to 22 solenoid valves, when is connected 0 or 1 INPUT modules, or 16 if node is fitted with 2 INPUT modules. The max number of INPUT modules 5200.08, is 2 .
PROFIBUS DP module recognizes automatically the presence of the Input modules on power on.
Node power supply is made by a M12 4P male circular connector.
The separation between node 24 VDC Power supply and outputs 24 VDC allows to switch off the outputs maintaning powered the node and inputs, if present.
Connection to Bus PROFIBUS DP is possible via 2 M12 type B 5P male - female circular connectors; these two are connected in parallel and according to PROFIBUS Interconnection Technology (Version 1.1 : August 2001).
The node address can be set using BCD numeration: 4 dip-switches for the units and 4 dip-switches for the tens.
The module includes an internal terminating resistance that can be activated by a dip-switch.

Ordering code

5323.22

Scheme / Overall dimensions and I/O layout :

POWER SUPPLY connector

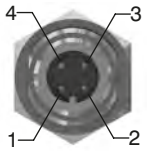

M12 4P MALE

PIN	DESCRIPTION
1	+24 VDC (NODE & INPUTS)
2	NC
3	GND
4	+24 VDC (OUTPUTS)

NETWORK connectors

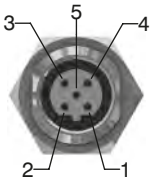

M12 5P FEMALE

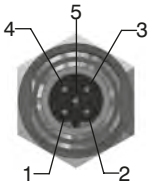

M12 5P MALE

PIN	SIGNAL	DESCRIPTION
1	VP	Power supply plus, (P5V)
2	A-line	Receive / Transmit data -N, A-line
3	DGND	Data Ground (reference potential to VP)
4	B-line	Receive / Transmit data -plus, B-line
5	SHIELD	Shield or PE

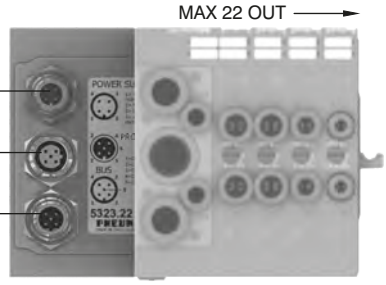

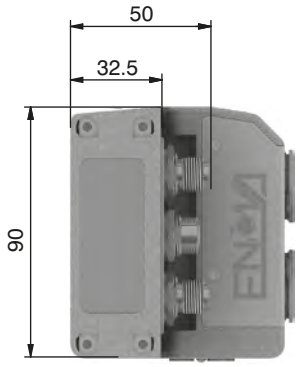

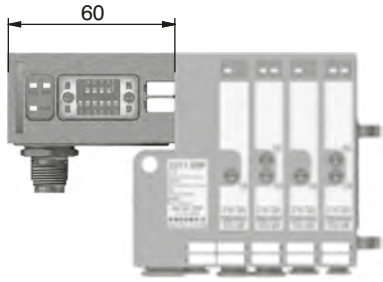

Technical characteristics

	Model	5323.22
	Specifications	PROFIBUS DP
	Case	Reinforced technopolymer
Power supply	Power supply connection	M12 4P male connector (IEC 60947-5-2)
	Power supply voltage	+24 VDC +/- 10%
	Node consumption (without inputs)	50 mA
	Power supply diagnosis	Green led PWR
Outputs	PNP equivalent outputs	+24 VDC +/- 10%
	Maximum current for output	100 mA
	Maximum output number	22 or 16 if node is fitted with 2 INPUT modules
	Max output simultaneously actuated	22
Network	Network connectors	2 M12 5P connectors male-female (IEC 60947-5-2)
	Baud rate	125 - 250 - 500 Kbit/s
	Addresses, possibile numbers	From 1 to 63
	Max nodes in net	64 (slave + master)
	Bus maximum recommended length	100 m a 500 Kbit/s
	Bus diagnosis	Green led + Red led
	Configuration file	Available from our web site: http://www.pneumaxspa.com
	IP protection grade	IP65 when assembled
	Temperature range	From -0° to +50° C

General:

Modules have 8 connectors M8 3P female.

The Inputs are PNP equivalent 24 VDC ±10%.
To each connector it is possible to plug both 2 wires Inputs (switches, magnetic switches pressure switches, etc) or 3 wires Inputs (proximity, photocells, electronic sensors, etc).
The maximum current available for all 8 Inputs is 200 mA.
Each module includes a 200 mA resettable fuse. If a short circuit or a overcharge (overall current >200mA) occur the safety device acts cutting the 24 VDC power supply to all M8 connectors on the module and switching off the green led PWR. Any other Input module connected to the node will remain powered and will function correctly.
Once the cause of the fault disappears the green led PWR light up indicating the ON state and the node will re-start to operate.
The Maximum number of Input modules supported is 3 for CANopen and DeviceNet, 2 for PROFIBUS DP.

Ordering code

5200.08

Scheme / Overall dimensions and I/O layout :

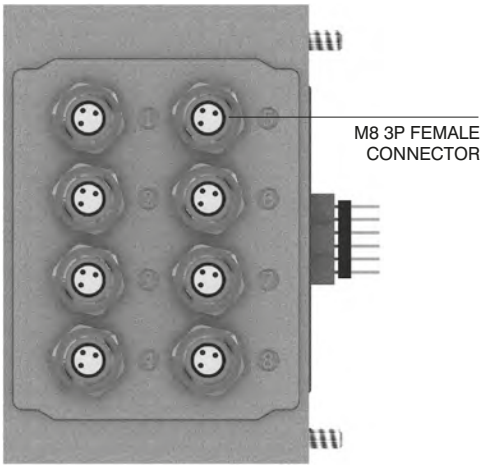

Module 1

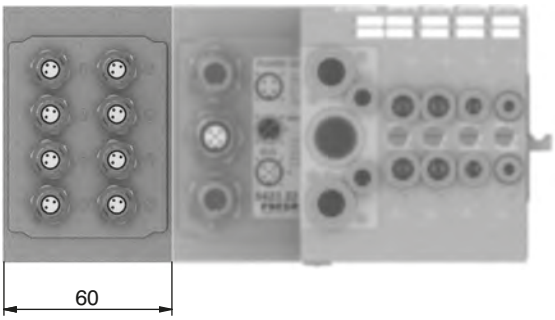

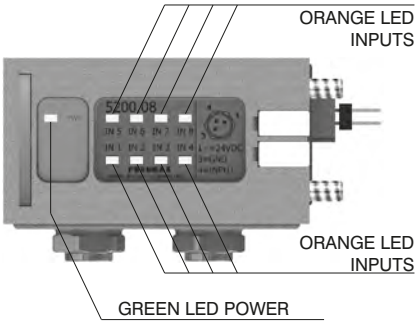

Module 2 Module 1

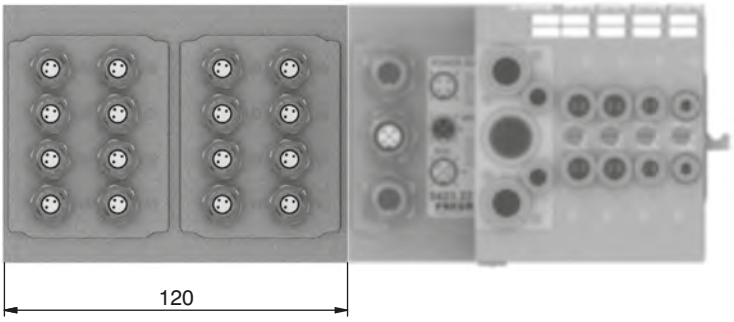

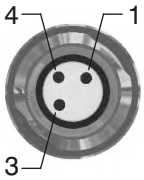

PIN	DESCRIPTION
1	+24 VDC
4	INPUT
3	GND

Module 3 Module 2 Module 1

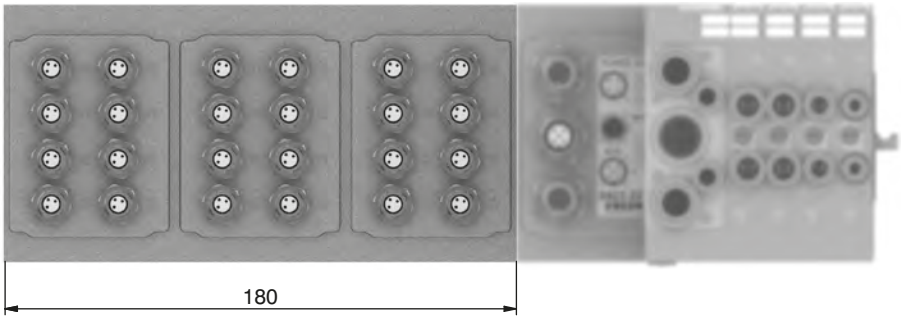

Overall dimensions and technical information are provided solely for informative purposes and may be modified without notice

POWER SUPPLY connector

Socket for Power Supply
STRAIGHT CONNECTOR
M12A 4P FEMALE

Ordering code

5312A.F04.00

Upper view
Slave connector

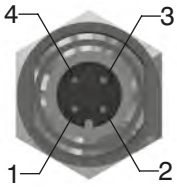

PIN	DESCRIPTION
1	+24 VDC Node
2	
3	0 V
4	+24 VDC Outputs

NETWORK connectors

Socket for Bus CANopen®
STRAIGHT CONNECTOR
M12B 5P FEMALE

Ordering code

5312A.F05.00

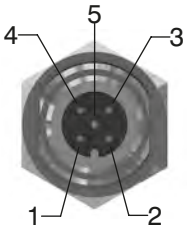

PIN	DESCRIPTION
1	(CAN_SHIELD)
2	(CAN_V+)
3	CAN_GND
4	CAN_H
5	CAN_L

Upper view
Slave connector

Plug for Bus CANopen®
STRAIGHT CONNECTOR
M12A 5P MALE

Ordering code

5312A.M05.00

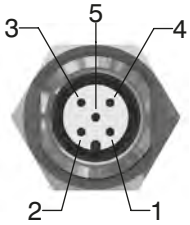

Socket for Bus PROFIBUS
STRAIGHT CONNECTOR
M12B 5P FEMALE

Ordering code

5312B.F05.00

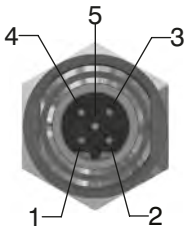

PIN	DESCRIPTION
1	Power Supply
2	A-line
3	DGND
4	B-line
5	SHIELD

Upper view
Slave connector

Plug for Bus PROFIBUS
STRAIGHT CONNECTOR
M12B 5P MALE

Ordering code

5312B.M05.00

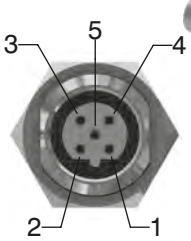

INPUT connectors

Plug for Input module
STRAIGHT CONNECTOR
M8 3P MALE

Ordering code

5308A.M03.00

Upper view
Slave connector

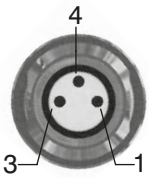

PIN	DESCRIPTION
1	+24 VDC
4	INPUT
3	GND

Plugs

M12 plug

Ordering code

5300.T12

M8 plug

Ordering code

5300.T08

Manifold layout configuration complete with Serial systems

E __ . __ . __ . __ __ __ __ __ __ __ __ __ __ __ __ __

ACCESSORIES :
0= none
D= DIN bar adapter
S= 90° Fixing bracket

ENDPLATES SELECTION :
A= 5 ports endplated left side plus right side endplated
B= 3 ports endplated left side plus right side endplated

BUS CONFIGURATION :
CA= CANopen® 22 OUT
CB= CANopen® 22 OUT + 8 INPUTS
CC= CANopen® 22 OUT + 16 INPUTS
CD= CANopen® 22 OUT + 24 INPUTS
DA= DeviceNet 22 OUT
DB= DeviceNet 22 OUT + 8 INPUTS
DC= DeviceNet 22 OUT + 16 INPUTS
DD= DeviceNet 22 OUT + 24 INPUTS
PA= PROFIBUS 22 OUT
PB= PROFIBUS 22 OUT + 8 INPUTS
PC= PROFIBUS 16 OUT + 16 INPUTS

SHORT CODE
FUNCTION / CONNECTION:
A4= SV 5/2 MONOST. SOL.-SPRING Ø4
A6= SV 5/2 MONOST. SOL.-SPRING Ø6
A8= SV 5/2 MONOST. SOL.-SPRING Ø8
B4= SV 5/2 MONOST. SOL.-DIFFERENTIAL Ø4
B6= SV 5/2 MONOST. SOL.-DIFFERENTIAL Ø6
B8= SV 5/2 MONOST. SOL.-DIFFERENTIAL Ø8
C4= SV 5/2 BISTABLE SOL.-SOL. Ø4
C6= SV 5/2 BISTABLE SOL.-SOL. Ø6
C8= SV 5/2 BISTABLE SOL.-SOL. Ø8
E4= SV 5/3 CC SOL.-SOL. Ø4
E6= SV 5/3 CC SOL.-SOL. Ø6
E8= SV 5/3 CC SOL.-SOL. Ø8
F4= SV 2x3/2 NC-NC (= 5/3 CA) SOL.-SOL. Ø4
F6= SV 2x3/2 NC-NC (= 5/3 CA) SOL.-SOL. Ø6
F8= SV 2x3/2 NC-NC (= 5/3 CA) SOL.-SOL. Ø8
G4= SV 2x3/2 NO-NO (= 5/3 CP) SOL.-SOL. Ø4
G6= SV 2x3/2 NO-NO (= 5/3 CP) SOL.-SOL. Ø6
G8= SV 2x3/2 NO-NO (= 5/3 CP) SOL.-SOL. Ø8
H4= SV 2x3/2 NC-NO SOL.-SOL. Ø4
H6= SV 2x3/2 NC-NO SOL.-SOL. Ø6
H8= SV 2x3/2 NC-NO SOL.-SOL. Ø8
L4= SV 2x2/2 NC-NC SOL.-SOL. Ø4
L6= SV 2x2/2 NC-NC SOL.-SOL. Ø6
L8= SV 2x2/2 NC-NC SOL.-SOL. Ø8
M4= SV 2x2/2 NO-NO SOL.-SOL. Ø4
M6= SV 2x2/2 NO-NO SOL.-SOL. Ø6
M8= SV 2x2/2 NO-NO SOL.-SOL. Ø8
N4= SV 2x2/2 NC-NO SOL.-SOL. Ø4
N6= SV 2x2/2 NC-NO SOL.-SOL. Ø6
N8= SV 2x2/2 NC-NO SOL.-SOL. Ø8
P4= SV 5/2 MONOST. SOL.-SPRING CEB Ø4
P6= SV 5/2 MONOST. SOL.-SPRING CEB Ø6
P8= SV 5/2 MONOST. SOL.-SPRING CEB Ø8
R4= SV 5/2 MONOST. SOL.-DIFF. CEB Ø4
R6= SV 5/2 MONOST. SOL.-DIFF. CEB Ø6
R8= SV 5/2 MONOST. SOL.-DIFF. CEB Ø8
T1 = 1 ELECTRIC SIGNAL THROUGH MODULE
T2 = 2 ELECTRIC SIGNALS THROUGH MODULE

J= INTERMEDIATE EXHAUST MODULE Ø8
K= INTERMEDIATE INLET MODULE Ø8
W = INLET-EXHAUST MODULE Ø8

X= INLET DIAPHRAGM
Y= EXHAUST DIAPHRAGM
Z= INLET -EXHAUST DIAPHRAGM

NOTE:
While configuring the manifold always bear in mind that the maximum number of electrical signals available is 22.
N.B. CEB = Electrical connector for bistable valves (uses two electric signals)
Intermediate supply / exhaust modules require the same space as a valve but do not use any electric signals (as the electric connector carries forward all signals received from the module immediately before).
The separation diaphragms are positioned between two modules and replace the standard seal therefore do not increase the dimension of the assembly. When using a separation diaphragm of any type, it is necessary to add, in any position between diaphragm and the manifold and plate, an extra air supply / exhaust module depending on the type of diaphragm used.

Overall dimensions and technical information are provided solely for informative purposes and may be modified without notice

Series 2200 "OPTYMA-S"

General

Optyma32-S has been designed in order to complete the Optyma series of valves.
Optyma–S,12.5mm size, integrates all the technical features already developed and implemented on the Optima T & F such as the integrated electrical connection. Further technical specifications are:

- Flow rate: up to 550[Nl/min], using the modular base with Ø8 quick fitting tube.
- Modular base available with Ø4, Ø6, Ø8 quick fitting tube.
- The solenoid pilots are low consumption and fitted on the same side of the valve.
- Mono and bistable valves have the same dimension.
- Easy and fast assembly on the sub base thanks to the “one screw” mounting solution.
- Possibility to replace a valve without the need of disconnecting the pneumatic pipes.
- Electrical and pneumatic connections positioned on the same side.
- Possibility to operate with different pressures and vacuum.
- Management of 32electrical signals,(16 bi-stable or any combination off mono and bi-stable vales up to max 32 signals).
- The protection grade is IP65 directly integrated in the manifold components.
- The electrical connection is achieved thanks to a 37 pole connector.
- Possibility to integrate with Field Bus modules CANopen®, PROFIBUS DP, DeviceNet, EtherNet/IP, PROFINET IO RT/IRT, EtherCAT®, Powerlink and Modbus/TCP.

“Shifting time of pneumatic directional control valves or moving parts, logic devices were measured in accordance to ISO 12238:2001, Pneumatic fluid power-Directional control valves-Measurement of shifting time”

Main characteristics

One size: 12.5mm thick
Monostable and bistable valves with same dimensions
Modular subbase with two positions
Modular subbases assembled via tie rods
Quick coupling connections directly integrated in sub base
Integrated and optimized electrical connection system.
IP65 protection grade as standard

Construction characteristics

Body	Technopolymer
Operators	Technopolymer
Spacers	NBR
Spacer	Technopolymer
Spools	AISI 303 stainless steel
Springs	AISI 303 stainless steel
Pistons	Technopolymer
Piston seals	NBR

Functions

SV 5/2 MONOSTABLE SOLENOID-SPRING
SV 5/2 MONOSTABLE SOLENOID-DIFFERENTIAL
SV 5/2 BISTABLE SOLENOID-SOLENOID
SV 5/3 C.C. SOLENOID-SOLENOID
SV 2x3/2 N.C.-N.C. (=5/3 O.C.) SOLENOID-SOLENOID
SV 2x3/2 N.O.-N.O. (=5/3 P.C.) SOLENOID-SOLENOID
SV 2x3/2 N.C.-N.O. SOLENOID-SOLENOID
SV 2x3/2 N.O.-N.C. SOLENOID-SOLENOID

Technical characteristics

Voltage	24VDC ±10% PNP (NPN and AC on request)
Pilot consumption	0,5 Watt
Pilot working pressure (12-14)	from 2,5 to 7 bar max.
Valve working pressure [1]	from vacuum to 10 bar max.
Operating temperature	from -5°C to +50°C
Protection degree	IP65
Life (standard operating conditions)	50000000
Fluid	Filtered air. No lubrication needed, if applied it shall be continuous

Solenoid - Spring

Coding: 2241.52.00.39.Ⓥ

Operational characteristics	
Fluid	Filtered air. No lubrication needed, if applied it shall be continuous
Working pressure (bar)	From vacuum to 10
Pressure range (bar)	2,5 ÷ 7
Temperature °C	-5 ÷ +50
Flow rate at 6 bar with Δp=1 (Nl/min)	550
Responce time according to ISO 12238, activation time (ms)	12
Responce time according to ISO 12238, deactivation time (ms)	20

Shifting time of pneumatic directional control valves or moving parts, logic devices were measured in accordance to ISO 12238:2001

Ⓥ	VOLTAGE
	02 = 24 VDC PNP
	12 = 24 VDC NPN
	05 = 24 VAC

SHORT FUNCTION CODE "A"
Weight 67 g

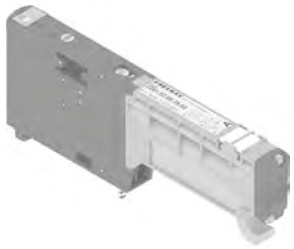

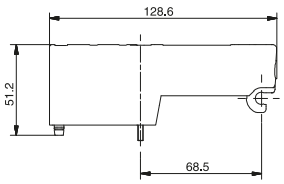

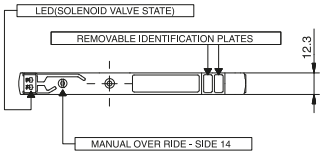

Flow rate at 6 bar with Δp=1 (Nl/min) with Base cod. 2244.01.Ⓥ tube Ø4= 140
Flow rate at 6 bar with Δp=1 (Nl/min) with Base cod. 2246.01.Ⓥ tubo Ø6= 400
Flow rate at 6 bar with Δp=1 (Nl/min) with Base cod. 2246.01.Ⓥ tubo Ø8= 550

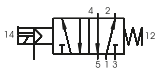

Solenoid-Differential

Coding: 2241.52.00.36.Ⓥ

Operational characteristics	
Fluid	Filtered air. No lubrication needed, if applied it shall be continuous
Working pressure (bar)	From vacuum to 10
Pressure range (bar)	2,5 ÷ 7
Temperature °C	-5 ÷ +50
Flow rate at 6 bar with Δp=1 (Nl/min)	550
Responce time according to ISO 12238, activation time (ms)	20
Responce time according to ISO 12238, deactivation time (ms)	25

Shifting time of pneumatic directional control valves or moving parts, logic devices were measured in accordance to ISO 12238:2001

Ⓥ	VOLTAGE
	02 = 24 VDC PNP
	12 = 24 VDC NPN
	05 = 24 VAC

SHORT FUNCTION CODE "B"
Weight 67 g

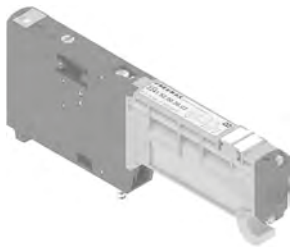

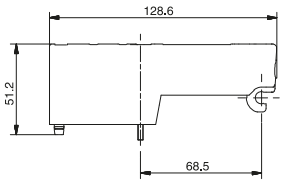

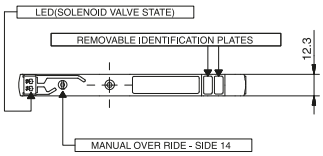

Flow rate at 6 bar with Δp=1 (Nl/min) with Base cod. 2244.01.Ⓥ tube Ø4= 140
Flow rate at 6 bar with Δp=1 (Nl/min) with Base cod. 2246.01.Ⓥ tubo Ø6= 400
Flow rate at 6 bar with Δp=1 (Nl/min) with Base cod. 2246.01.Ⓥ tubo Ø8= 550

Solenoid-Solenoid

Coding: 2241.52.00.35.Ⓥ

Operational characteristics	
Fluid	Filtered air. No lubrication needed, if applied it shall be continuous
Working pressure (bar)	From vacuum to 10
Pressure range (bar)	2,5 ÷ 7
Temperature °C	-5 ÷ +50
Flow rate at 6 bar with Δp=1 (Nl/min)	550
Responce time according to ISO 12238, activation time (ms)	10
Responce time according to ISO 12238, deactivation time (ms)	10

Shifting time of pneumatic directional control valves or moving parts, logic devices were measured in accordance to ISO 12238:2001

Ⓥ	VOLTAGE
	02 = 24 VDC PNP
	12 = 24 VDC NPN
	05 = 24 VAC

SHORT FUNCTION CODE "C"
Weight 67 g

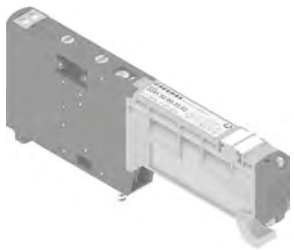

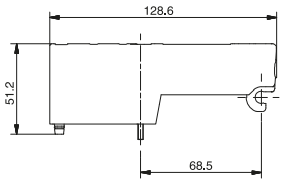

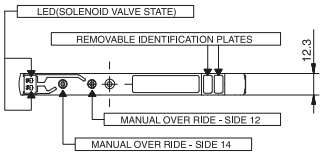

Flow rate at 6 bar with Δp=1 (Nl/min) with Base cod. 2244.01.Ⓥ tube Ø4= 140
Flow rate at 6 bar with Δp=1 (Nl/min) with Base cod. 2246.01.Ⓥ tubo Ø6= 400
Flow rate at 6 bar with Δp=1 (Nl/min) with Base cod. 2246.01.Ⓥ tubo Ø8= 550

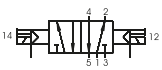

Overall dimensions and technical information are provided solely for informative purposes and may be modified without notice

Solenoid-Solenoid 5/3 (Closed centres)

Coding: 2241.53.31.35.Ⓥ

Operational characteristics	
Fluid	Filtered air. No lubrication needed, if applied it shall be continuous
Working pressure (bar)	From vacuum to 10
Pressure range (bar)	2,5 ÷ 7
Temperature °C	-5 ÷ +50
Flow rate at 6 bar with Δp=1 (Nl/min)	400
Responce time according to ISO 12238, activation time (ms)	15
Responce time according to ISO 12238, deactivation time (ms)	20

Shifting time of pneumatic directional control valves or moving parts, logic devices were measured in accordance to ISO 12238:2001

	VOLTAGE
Ⓥ	**02** = 24 VDC PNP
	12 = 24 VDC NPN
	05 = 24 VAC

SHORT FUNCTION CODE "E"
Weight 83 g

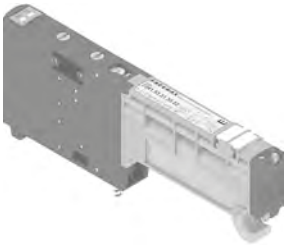

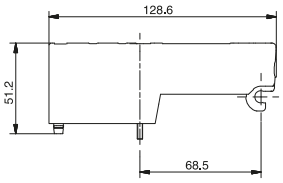

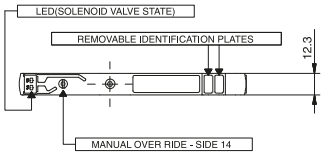

Flow rate at 6 bar with Δp=1 (Nl/min) with Base cod. 2244.01.Ⓥ tube Ø4= 140
Flow rate at 6 bar with Δp=1 (Nl/min) with Base cod. 2246.01.Ⓥ tube Ø6= 300
Flow rate at 6 bar with Δp=1 (Nl/min) with Base cod. 2246.01.Ⓥ tubo Ø8= 400

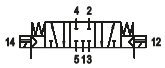

Solenoid-Solenoid 2x3/2

Coding: 2241.62.Ⓕ.35.Ⓥ

Operational characteristics	
Fluid	Filtered air. No lubrication needed, if applied it shall be continuous
Working pressure (bar)	From vacuum to 10
Pressure range (bar)	≥3+(0,2xInlet pressure)
Temperature °C	-5 ÷ +50
Flow rate at 6 bar with Δp=1 (Nl/min)	420
Responce time according to ISO 12238, activation time (ms)	15
Responce time according to ISO 12238, deactivation time (ms)	25

Shifting time of pneumatic directional control valves or moving parts, logic devices were measured in accordance to ISO 12238:2001

	FUNCTION
Ⓕ	**44** = NC-NC (5/3 Open centres)
	45 = NC-NO (normally closed-normally open)
	54 = NO-NC (normally open-normally closed)
	55 = NO-NO (5/3 Pressured centres)
	VOLTAGE
Ⓥ	**02** = 24 VDC PNP
	12 = 24 VDC NPN
	05 = 24 VAC

SHORT FUNCTION CODE:
NC-NC (5/3 Open centres)="F"
NO-NO (5/3 Pressured centres)="G"
NC-NO="H"
NO-NC="I"
Weight 75 g

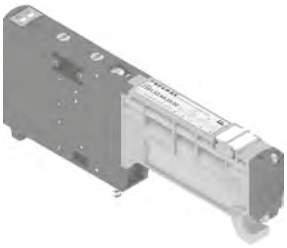

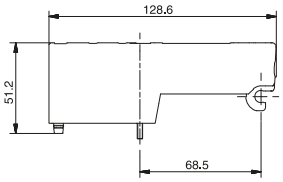

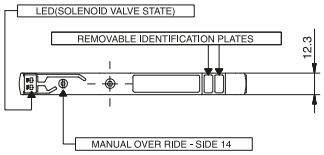

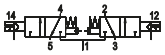

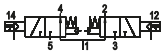

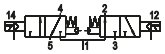

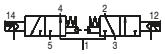

Flow rate at 6 bar with Δp=1 (Nl/min) with Base cod. 2244.01.Ⓥ tube Ø4= 140
Flow rate at 6 bar with Δp=1 (Nl/min) with Base cod. 2246.01.Ⓥ tubo Ø6= 360
Flow rate at 6 bar with Δp=1 (Nl/min) with Base cod. 2246.01.Ⓥ tubo Ø8= 420

Left Endplates

Coding: 2240.Ⓥ.Ⓒ

Operational characteristics	
Fluid	Filtered air. No lubrication needed, if applied it shall be continuous
Working pressure (bar)	From vacuum to 10 (External pilot base) 2,5-7 (Self-feeding base)
Pressure range (bar)	2,5 ÷ 7 (External pilot base)
Temperature °C	-5 ÷ +50

Ⓥ	VERSION	
	02 =	External feeding
	12 =	Self-feeding
Ⓒ	ELECTRICAL CONNECTION	
	37P = PNP	Connectors 37 poles
	25P = PNP	Connectors 25 poles
	37N = NPN	Connectors 37 poles
	25N = NPN	Connectors 25 poles
	37A = AC	Connectors 37 poles
	25A = AC	Connectors 25 poles

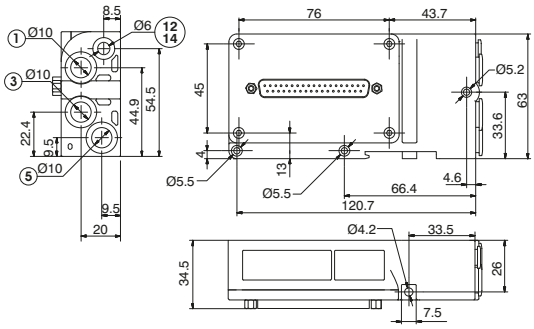

Weight 174 g
12/14 separated from port 1

2240.02.Ⓒ

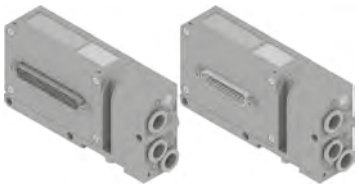

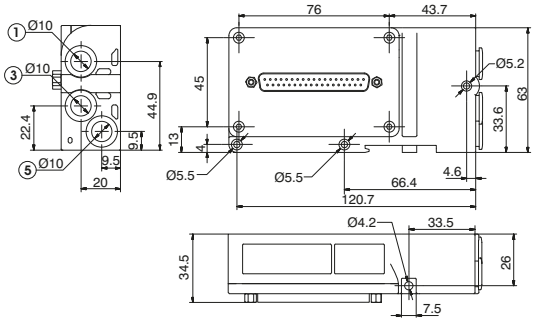

Weight 174 g
12/14 connected to port 1

2240.12.Ⓒ

Right Endplates

Coding: 2240.03.Ⓒ

Operational characteristics	
Fluid	Filtered air. No lubrication needed, if applied it shall be continuous
Working pressure (bar)	From vacuum to 10
Pressure range (bar)	2,5 ÷ 7
Temperature °C	-5 ÷ +50

Ⓒ	ELECTRICAL CONNECTION	
	00 =	Electrical connection
	25P =	Connectors 25 poles

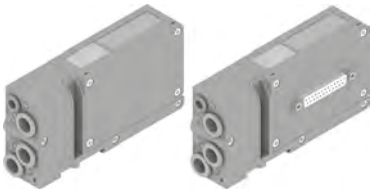

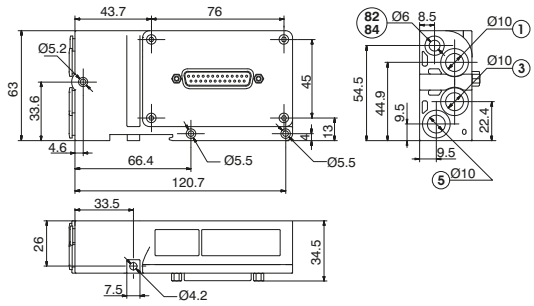

Weight 147 g
PORT 82/84= DO NOT PRESSURIZE, SOLENOID PILOTS EXHAUST

Closing plate

Coding: 2240.00

Operational characteristics	
Fluid	Filtered air. No lubrication needed, if applied it shall be continuous
Working pressure (bar)	From vacuum to 10
Temperature °C	-5 ÷ +50

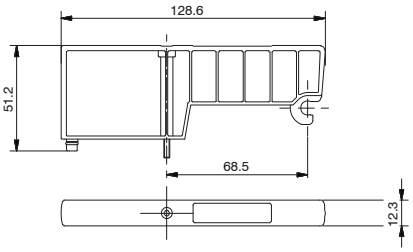

Weight 30 g
SHORT FUNCTION CODE "T"

Overall dimensions and technical information are provided solely for informative purposes and may be modified without notice

Intermediate Inlet/Exhaust module

Coding: 2240.10

Operational characteristics	
Fluid	Filtered air. No lubrication needed, if applied it shall be continuous
Working pressure (bar)	From vacuum to 10
Temperature °C	-5 ÷ +50

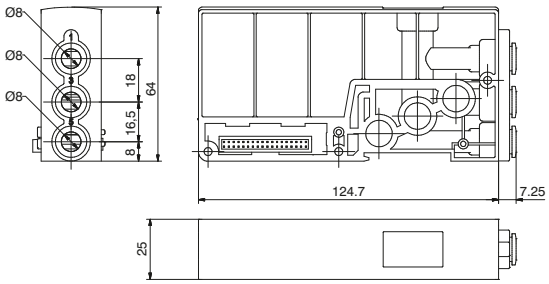

Weight 105 g
SHORT FUNCTION CODE "W"

Modular base (2 places)

Coding: 224Ⓒ.ⒻⓋ

Operational characteristics	
Fluid	Filtered air. No lubrication needed, if applied it shall be continuous
Working pressure (bar)	From vacuum to 10
Temperature °C	-5 ÷ +50

Ⓒ	TUBE DIAMETER
	4 = Ø4
	6 = Ø6
	8 = Ø8
Ⓕ	FUNCTION
	01 = Opened ports
	03 = Ports 1-5 separated
	04 = Ports 1-3 separated
	05 = Ports 5 separated
	06 = Separated ports
	07 = Ports 1 separated
	08 = Ports 3-5 separated
	09 = Ports 3 separated
Ⓥ	VERSION
	M = for Monostable SV
	B = for Bistable SV

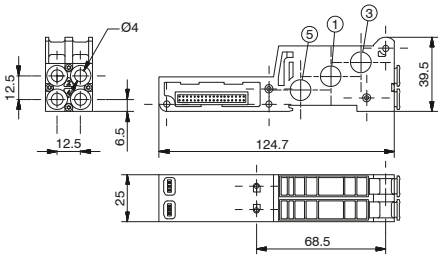

2244.ⒻⓋ

Weight 75 g

SHORT FUNCTION CODE "3" (Monostable) Opened ports
SHORT FUNCTION CODE "33" (Monostable) Ports 1-5 separated
SHORT FUNCTION CODE "34" (Monostable) Ports 1-3 separated
SHORT FUNCTION CODE "35" (Monostable) Port 5 separated
SHORT FUNCTION CODE "36" (Monostable) Separated ports
SHORT FUNCTION CODE "37" (Monostable) Port 1 separated
SHORT FUNCTION CODE "38" (Monostable) Ports 3-5 separated
SHORT FUNCTION CODE "39" (Monostable) Port 3 separated

SHORT FUNCTION CODE "4" (Bistable) Opened ports
SHORT FUNCTION CODE "43" (Bistable) Ports 1-5 separated
SHORT FUNCTION CODE "44" (Bistable) Ports 1-3 separated
SHORT FUNCTION CODE "45" (Bistable) Port 5 separated
SHORT FUNCTION CODE "46" (Bistable) Separated ports
SHORT FUNCTION CODE "47" (Bistable) Port 1 separated
SHORT FUNCTION CODE "48" (Bistable) Ports 3-5 separated
SHORT FUNCTION CODE "49" (Bistable) Port 3 separated

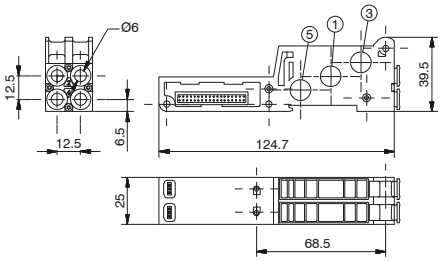

2246.ⒻⓋ

Weight 75 g

SHORT FUNCTION CODE "5" (Monostable) Opened ports
SHORT FUNCTION CODE "53" (Monostable) Ports 1-5 separated
SHORT FUNCTION CODE "54" (Monostable) Ports 1-3 separated
SHORT FUNCTION CODE "55" (Monostable) Port 5 separated
SHORT FUNCTION CODE "56" (Monostable) Separated ports
SHORT FUNCTION CODE "57" (Monostable) Port 1 separated
SHORT FUNCTION CODE "58" (Monostable) Ports 3-5 separated
SHORT FUNCTION CODE "59" (Monostable) Port 3 separated

SHORT FUNCTION CODE "6" (Bistable) Opened ports
SHORT FUNCTION CODE "63" (Bistable) Ports 1-5 separated
SHORT FUNCTION CODE "64" (Bistable) Ports 1-3 separated
SHORT FUNCTION CODE "65" (Bistable) Port 5 separated
SHORT FUNCTION CODE "66" (Bistable) Separated ports
SHORT FUNCTION CODE "67" (Bistable) Port 1 separated
SHORT FUNCTION CODE "68" (Bistable) Ports 3-5 separated
SHORT FUNCTION CODE "69" (Bistable) Port 3 separated

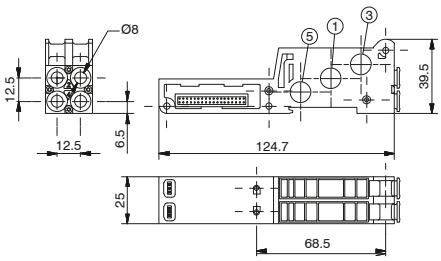

2248.ⒻⓋ

Weight 75 g

SHORT FUNCTION CODE "7" (Monostable) Opened ports
SHORT FUNCTION CODE "73" (Monostable) Ports 1-5 separated
SHORT FUNCTION CODE "74" (Monostable) Ports 1-3 separated
SHORT FUNCTION CODE "75" (Monostable) Port 5 separated
SHORT FUNCTION CODE "76" (Monostable) Separated ports
SHORT FUNCTION CODE "77" (Monostable) Port 1 separated
SHORT FUNCTION CODE "78" (Monostable) Ports 3-5 separated
SHORT FUNCTION CODE "79" (Monostable) Port 3 separated

SHORT FUNCTION CODE "8" (Bistable) Opened ports
SHORT FUNCTION CODE "83" (Bistable) Ports 1-5 separated
SHORT FUNCTION CODE "84" (Bistable) Ports 1-3 separated
SHORT FUNCTION CODE "85" (Bistable) Port 5 separated
SHORT FUNCTION CODE "86" (Bistable) Separated ports
SHORT FUNCTION CODE "87" (Bistable) Port 1 separated
SHORT FUNCTION CODE "88" (Bistable) Ports 3-5 separated
SHORT FUNCTION CODE "89" (Bistable) Port 3 separated

Polyethylene Silencer Series SPL-R

Coding: SPLR.Ⓓ

	TUBE DIAMETER
Ⓓ	**6** = 6 mm
	10 = 10 mm

Diaphragm plug

Coding: 2230.17

Weight 6,5 g

Tie-rod M3

Coding: 2240.KD.00

The Kit includes 6 pieces

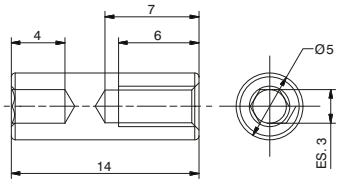

Tie-rod M3

Coding: 2240.KT.Ⓟ

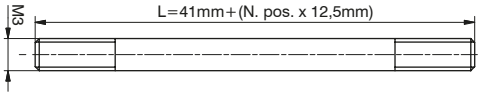

The Kit includes 3 pieces

	N. POSITIONS
Ⓟ	**02** = Nr. 2 Positions
	04 = Nr. 4 Positions
	06 = Nr. 6 Positions
	08 = Nr. 8 Positions
	10 = Nr. 10 Positions
	12 = Nr. 12 Positions
	14 = Nr. 14 Positions
	16 = Nr. 16 Positions
	18 = Nr. 18 Positions
	20 = Nr. 20 Positions
	22 = Nr. 22 Positions
	24 = Nr. 24 Positions
	26 = Nr. 26 Positions
	28 = Nr. 28 Positions
	30 = Nr. 30 Positions
	32 = Nr. 32 Positions

Cable complete with connector, 25 Poles IP65

Coding: 2300.25.Ⓛ.Ⓒ

	CABLE LENGTH
Ⓛ	**03** = 3 meters
	05 = 5 meters
	10 = 10 meters
	FUNCTION
Ⓕ	**31** = Closed centres
	32 = Open centres
	33 = Pressured centres

Cable complete with connector, 37 Poles IP65

Coding: 2400.37.Ⓛ.Ⓒ

	CABLE LENGTH
Ⓛ	**03** = 3 meters
	05 = 5 meters
	10 = 10 meters
	FUNCTION
Ⓕ	**31** = Closed centres
	32 = Open centres
	33 = Pressured centres

Cable complete with connector, 25 Poles IP65

Coding: 2400.25.Ⓛ.25

	CABLE LENGTH
Ⓛ	**03** = 3 meters
	05 = 5 meters
	10 = 10 meters

Overall dimensions and technical information are provided solely for informative purposes and may be modified without notice

General :

Using the 2240.03.25P output terminal it is possible to make any electrical signals not used by valves available on a 25 sub-D female connector at the right end of the manifold.
It is possible to then join a multi-core cable to link to the next manifold, or connect directly to one or two I/O modules.
The I/O modules can accept input or output signals, depending upon what is connected.

Ordering code

2240.08S

Please note: If the manifold is connected by a multi-core connection, each connection can be used as either an input or an output, while if the manifold is connected to a serial node the connections can only be used as an output.

It is possible to connect the manifold to up to two I/O modules.

Each I/O module includes 8 diagnostic LEDs which indicate the presence of an Input / Output signal for each connector.

Please note: For an LED to function, a signal of at least +15VDC must be present on pin 4 of the connector. If this signal is lower, the LED will not light, this does not compromise the normal Input / Output function of the unit.

Overall dimensions and I/O layout:

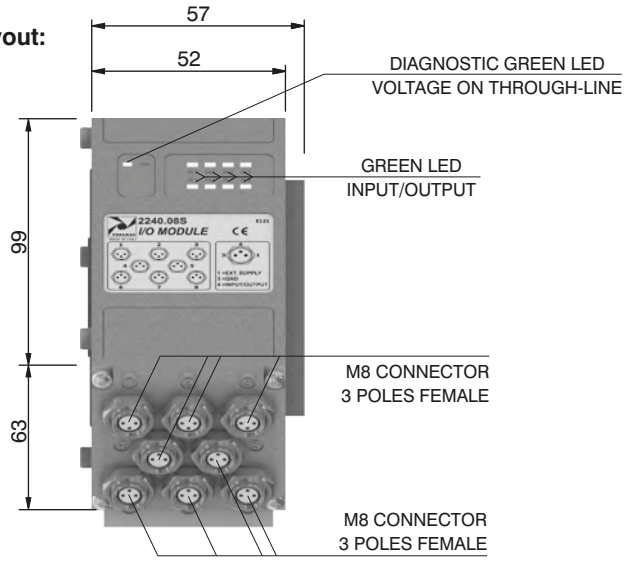

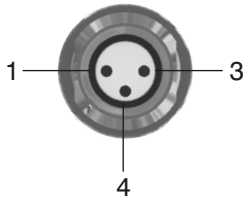

PIN	DESCRIPTION
1	+24 VDC
4	INPUT/OUTPUT
3	GND

Input features:

Each connection can accept either two wire (switches, magnetic switches, pressure switches, etc.) or three wire connections (photocells, electronic end of stroke sensors, etc.) if +24VDC is required on at Pin 1 of each connector, it is possible to provide this via the through-line pin of the multi-pole connector.
I.E :
Pin 25 of the 25 pin multi-pole connector (code 2240.02.25P or 2240.12.25P)
Pin 36-37 of the 37 pin multi-pole connector (code 2240.02.37P or 2240.12.37P)

Output features:

Attention: The output connections are not protected against short-circuit. Please pay attention when wiring (avoid Pin 4 being connected to Pin 3 or Pin 1).

	Model	2240.08S
	Case	Reinforced technopolymer
General characteristics	I/O Connector	M8 connector 3 poles female (IEC 60947-5-2)
	PIN 1 voltage (connector used as Input)	by the user
	PIN 4 voltage diagnosis	Green Led
	Node consumption (Outlets excluded)	7mA per each LED with 24 VDC signal
	Outlets voltage	+23,3 VDC (serial) /by the user (multipolar)
	Input voltage	Depend by the using
	Maximum outlet current	100 mA (serial) / 400 mA (multipolar)
	Maximum Input/Output	8 per module
	Multiconnector max. Current	100 mA
	Connections to manifold	Direct connection to 25 poles connector
	Maximum n. of moduls	2
	Protection degree	IP65 when assembled
	Ambient temperature	from -0° to +50° C

CORRESPONDENCE BETWEEN MULTI-POLE SIGNAL AND CONNECTOR

SUB-D TYPE 37 POLE MALE CONNECTOR

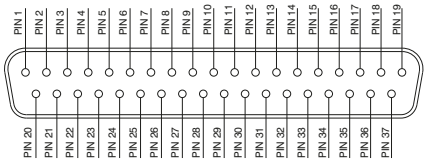

1 - 32 = SIGNALS
33 - 35 = GND
36 - 37 = THROUGH LINE

SUB-D TYPE 25 POLE MALE CONNECTOR

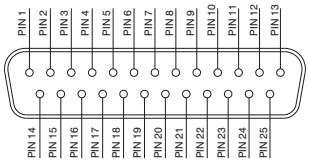

1 - 22 = SIGNALS
23 - 24 = GND
25 = THROUGH LINE

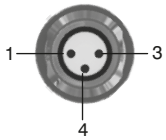

PIN	DESCRIPTION
1	THROUGH LINE
4	SIGNAL
3	GND

Connection modes:

The I/O module changes it is operation depending on the way the manifold is controlled. There are two possible modes:

A) Control via multi-pole connection
B) Control via fieldbus

In order to use the I/O module, the correct right hand endplate with 25 pole female outlet connector must be used. (Code 2240.03.25P).

A) Control via multi-pole :

M8 connector used as Input:

Attention: Voltage applied to each connector is passed to multi-pole connector pin.

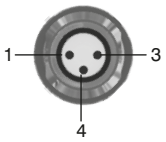

PIN	DESCRIPTION
1	THROUGH LINE
4	SIGNAL
3	GND

M8 connector used as Output:

Output voltage will the same as is applied at the multi-pole connector pin.
The maximum output current depends upon the power unit used, but we recommend no more than 250mA.

Attention: Since every cable has a degree of resistance, there will always be a voltage drop depending on the cable's length, sectional area and the current.

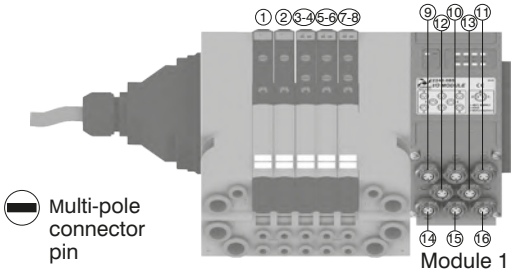

Attention: Only one more I/O module can be added.

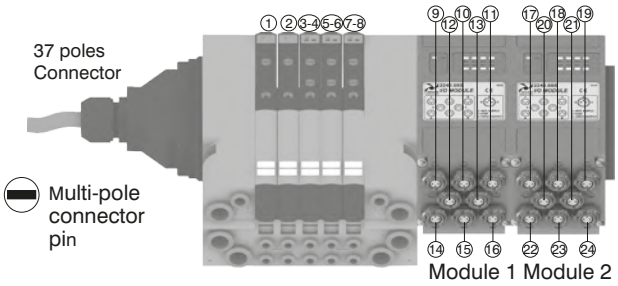

Attention: No more additions are possible

Attention : Optyma 32-**S** solenoid valve manifolds permit up to 22 electrical signals that are not used by manifolds to be made available: these signals can be managed by another manifold and / or by I/O modules.
The I/O module will manage these unused signals. Connections that are not managing useful signals will remain unconnected.

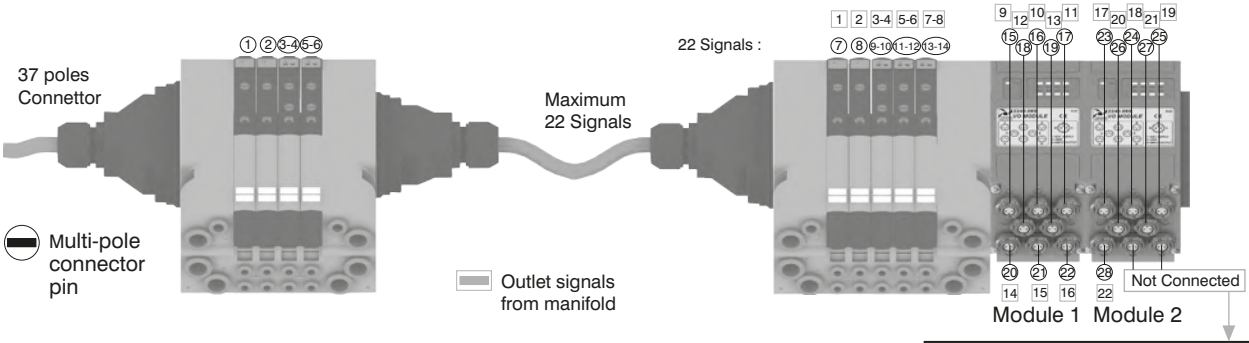

Please note: this example considers a 37 pin multi-pole connector.
The same configuration managed by a 25 pin multi-pole connector will stop at number 22 of multi-pole connector and at number 17 of the manifold. 22 16

Attention:
Signal Not connected
GND Connected
Through line Connected

Overall dimensions and technical information are provided solely for informative purposes and may be modified without notice

Please note: Optyma 32-S solenoid valve manifolds manage up to 32 signals. If the manifold uses more than 24 signals the I/O module will manage only the remainder. Connections that are not managing useful signals will remain unconnected.

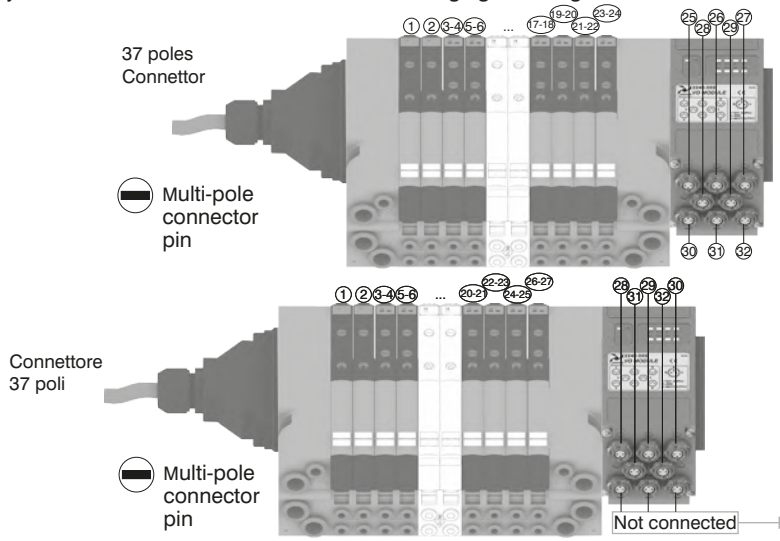

Attention:
Signal Not connected
GND Connected
Through line Connected

B) Control via fieldbus:

With this kind of control the I/O module can only be used as an output. Pin 1 of each connector is not connected. The output voltage will be 0.7V lower than that applied to Pin 4 of the connector.
The maximum output current for each output is 100mA. Te correspondence between control byte and each single output depends on how many electrical signals are used by the manifold and by the relative position of the I/O module.

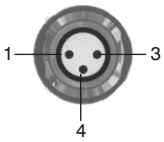

PIN	DESCRIPTION
1	NOT CONNECTED
4	SIGNAL
3	GND

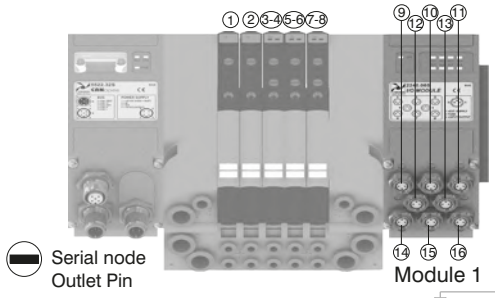

Attention:
Output only

Attention:
Only one more
I/O module
can be added.

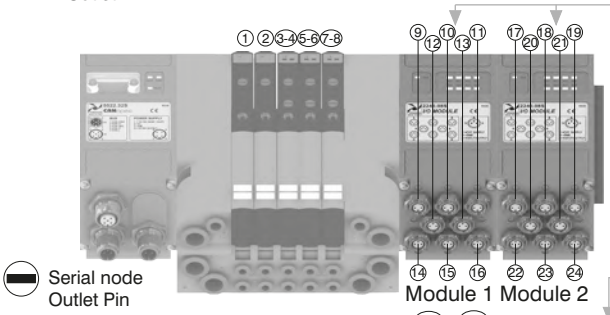

Attention:
Output only

Attention:
No more additions
are possible

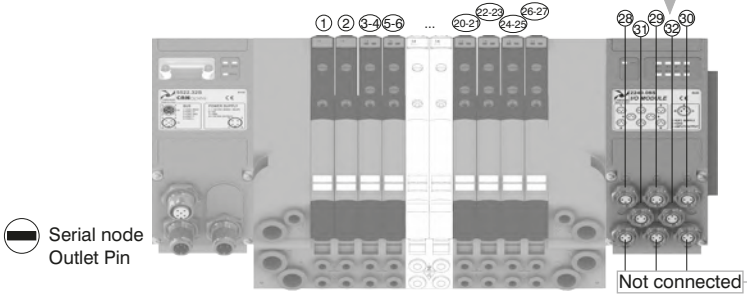

Attention:
Output only

Attention:
Signal Not connected
GND Connected

Please note: I/O modules don't allow to connect any additional valves manifold after them.

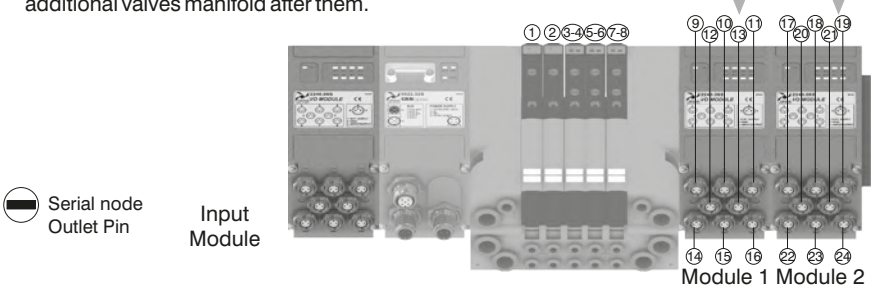

Attention:
Output only

Attention:
No more additions
are possible

Electrical connection

The electrical connection is made using a 37 pin connector and can manage up to 32 electrical signals. Alternatively a 25 pin connector can be used which is suitable for up to 22 electrical signals. The distributions of the electrical signals between sub-bases achieved thanks to a dedicated electrical connector positioned in each sun-base which diverts the signals needed to operate the solenoid pilots of the valve mounted on the sub-base and passing unused signals forward to the next base.

The Optyma-S sub-bases are designed to carry two valves and are available in the following configurations:

Sub-base configurations	Signals used for the single position	Total number of used signal
Sub-base for 2 bistable valves	2 signals used for the first position	**4**
	2 signals used for the second position	
Sub-base for 2 monostable valves	1 signal used for the first position	**2**
	1 signal used for the second position	

Sub-base for 2 bistable valves

On the sub base for 2 bistable valves the first electrical signal is used to actuate the solenoid pilot on side 14 of the first position, the second signal is used to actuate the solenoid pilot on side 12 of the first position. Each sub base uses 4 electric signals. The same layout applies to the following position therefore the third signal is used to actuate the solenoid pilot on side 14 of the second position and the fourth signal is used to actuate the solenoid pilot on side 12 of the second position.
The remaining signals are transferred downstream.
On a bistable sub base it is possible to mount both bistable or monostable valves (in the second case 1 electrical signal for each valve is wasted). This solutions enables the user to change the manifold layout without the need to re-configure the output correspondence on the PLC. The use of bistable sub-bases reduces the maximum number of valves that can be mounted on the manifold: If the 37 pole connector is used the maximum number of valves is 16 If the 25 pole connector is used the maximum number of valves is 10.

Sub-base for 2 monostable valves

On the sub base for 2 monostable valves the first electrical signal is used to actuate the solenoid pilot on side 14 of the first position, the second signal is used to actuate the solenoid pilot on side 12 of the second position. Each sub base uses 2 electric signals.
The remaining signals are transferred downstream. On a monostable sub base it is possible to mount only monostable valves (shoud a bistable valve be mounted on a monostable sub base it will not be possible to actuate the solenoid pilot on side 12). This solutions enables the user to maximise the manifold lay out using all the electrical signals available.

If the 37 pole connector is used the maximum number of valves is 32
If the 25 pole connector is used the maximum number of valves is 22

Note:
Monostable valves, which are fitted with only one solenoid pilot can be mounted on both monostable or bistable sub bases.
Bistable valves ,5/3; 2x3/2;2x2/2, which are fitted with 2 solenoid pilots and therefore always use two electrical signals must always be mounted on bistable subbases.

Additional exhaust and air supply modules:

The Additional exhaust and air supply module is fitted with a dedicated electrical connector which does not use any electric signal but simply carries forward all signals which have not been used by the valves mounted before it.
This enables its use in any position of the manifold.

Overall dimensions and technical information are provided solely for informative purposes and may be modified without notice

Unused electrical signals

The electrical signals which have not been used in the manifold can be made available by using the end plate fitted with the 25 pole connector.
The number of electric signals available depends on the type of connector mounted on the inlet plate and on the number of signals used in the manifold:

37 pole Inlet connector : N. of outputs= 32 – used signals (max 22)
25 pole Inlet connector : N. of outputs= 22 – used signals

Here are some examples of possible configurations and the corresponding pin layout both on the inlet and end plate :

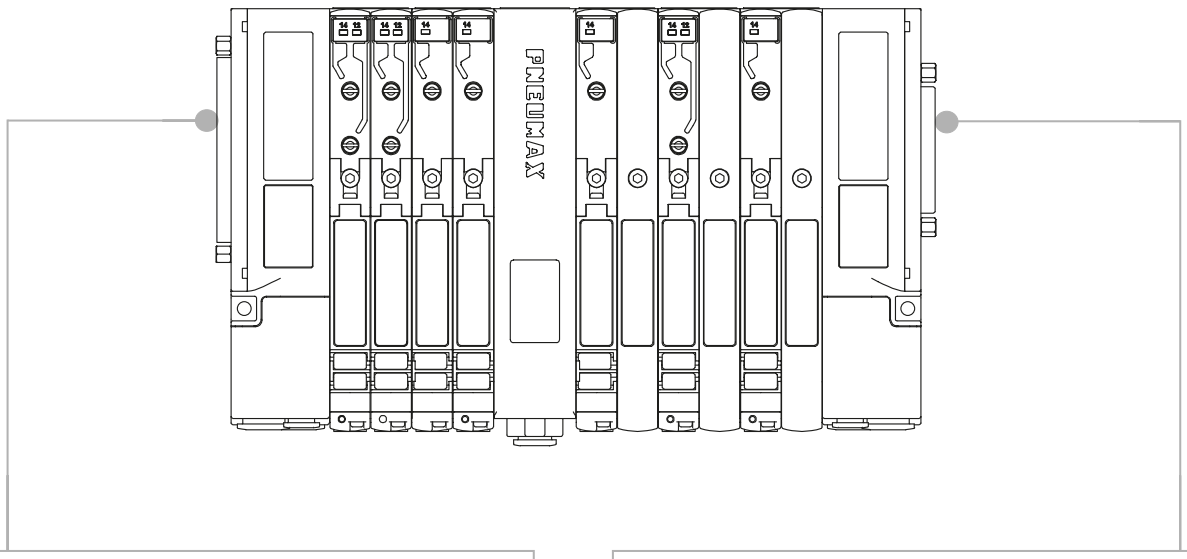

INLET ELECTRIC CONNECTIONS

SUB-D 37 POLE MALE CONNECTOR

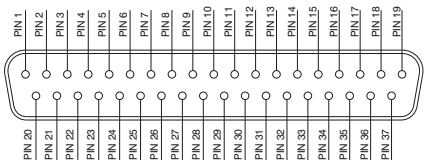

1 - 32 = Solenoid valves signals
33 - 35 = GND
36 - 37 = Through line

SUB-D 25 POLE MALE CONNECTOR

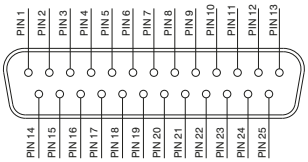

1 - 22 = Solenoid valves signals
23 - 24 = GND
25 = Through line

OUTLET ELECTRIC CONNECTIONS (IF PRESENT)

SUB-D 25 POLE
FEMALE CONNECTOR

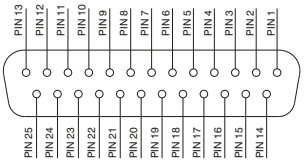

1 - 22 = Solenoid valves signals
23 - 24 = GND
25 = Through line

37 PIN Connector correspondence for valves assembled on mixed bases

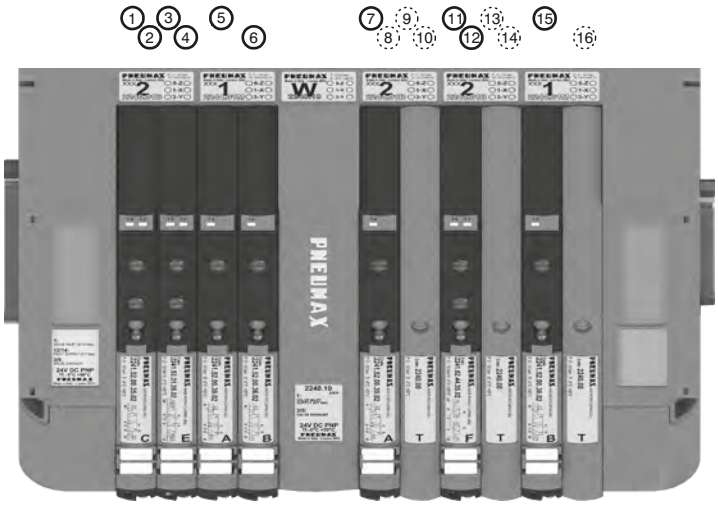

PIN 1 = PILOT 14 SV POS.1
PIN 2 = PILOT 12 SV POS.1
PIN 3 = PILOT 14 SV POS.2
PIN 4 = PILOT 12 SV POS.2
PIN 5 = PILOT 14 SV POS.3
PIN 6 = PILOT 14 SV POS.4
PIN 7 = PILOT 14 SV POS.6
PIN 8 = NOT CONNECTED
PIN 9 = NOT CONNECTED
PIN 10 = NOT CONNECTED
PIN 11 = PILOT 14 SV POS.8
PIN 12 = PILOT 12 SV POS.8
PIN 13 = NOT CONNECTED
PIN 14 = NOT CONNECTED
PIN 15 = PILOT 14 SV POS.10
PIN 16 = NOT CONNECTED

POS.	1	2	3	4	5	6	7	8	9	10	11

37 PIN Connector correspondence for manifold mounted on bases for bistable valves

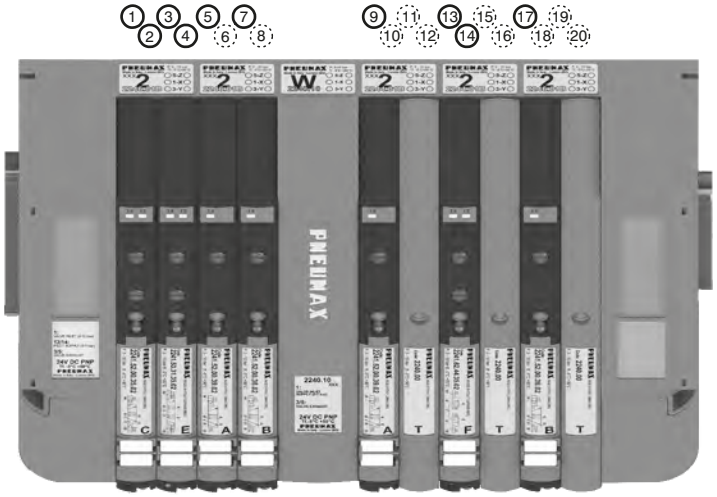

PIN 1 = PILOT 14 SV POS.1
PIN 2 = PILOT 12 SV POS.1
PIN 3 = PILOT 14 SV POS.2
PIN 4 = PILOT 12 SV POS.2
PIN 5 = PILOT 14 SV POS.3
PIN 6 = NOT CONNECTED
PIN 7 = PILOT 14 SV POS.4
PIN 8 = NOT CONNECTED
PIN 9 = PILOT 14 SV POS.6
PIN 10 = NOT CONNECTED
PIN 11 = NOT CONNECTED
PIN 12 = NOT CONNECTED
PIN 13 = PILOT 14 SV POS.8
PIN 14 = PILOT 12 SV POS.8
PIN 15 = NOT CONNECTED
PIN 16 = NOT CONNECTED
PIN 17 = PILOT 14 SV POS.10
PIN 18 = NOT CONNECTED
PIN 19 = NOT CONNECTED
PIN 20 = NOT CONNECTED

POS.	1	2	3	4	5	6	7	8	9	10	11

37 PIN Connector correspondence for manifold for 32 position manifold with monostable valves on double bases

37P

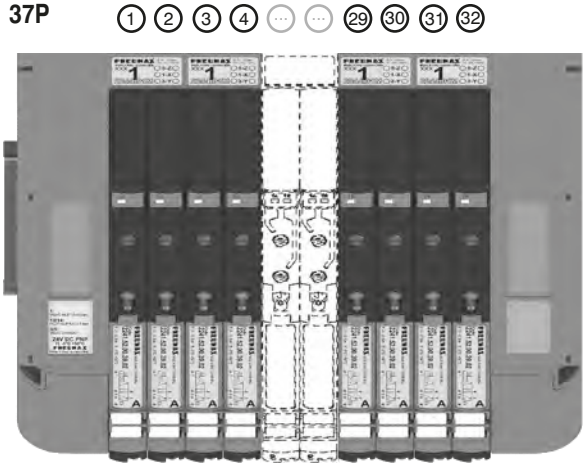

POS.	1	2	3	4	...	29	30	31	32

25P

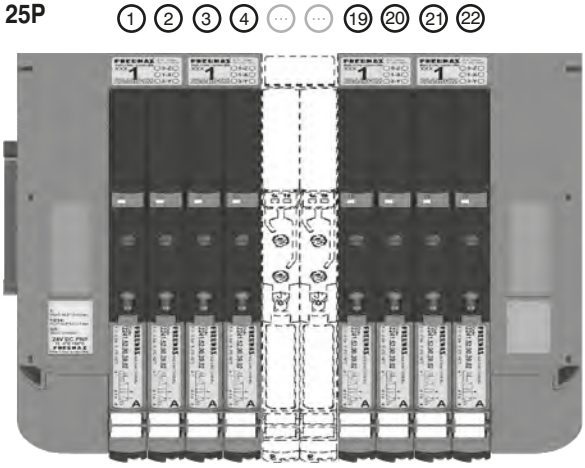

POS.	1	2	3	4	...	19	20	21	22

Overall dimensions and technical information are provided solely for informative purposes and may be modified without notice

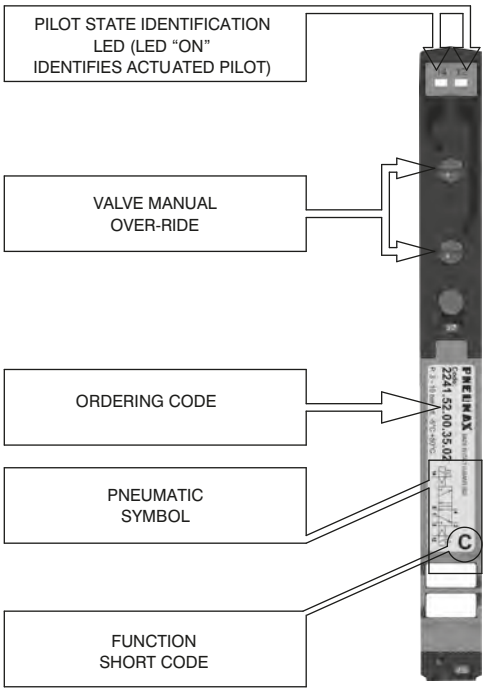

From the top

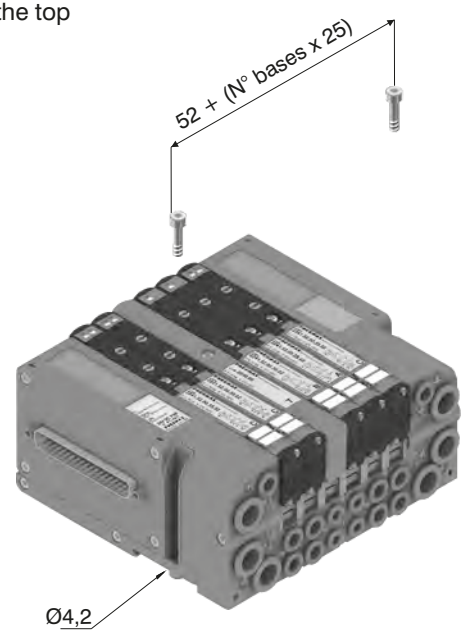

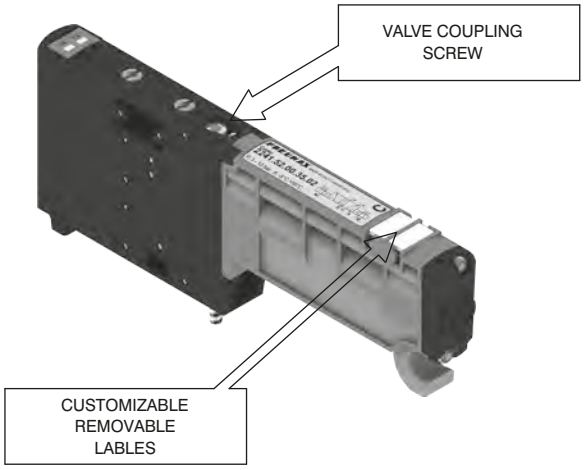

DIN rail fixing

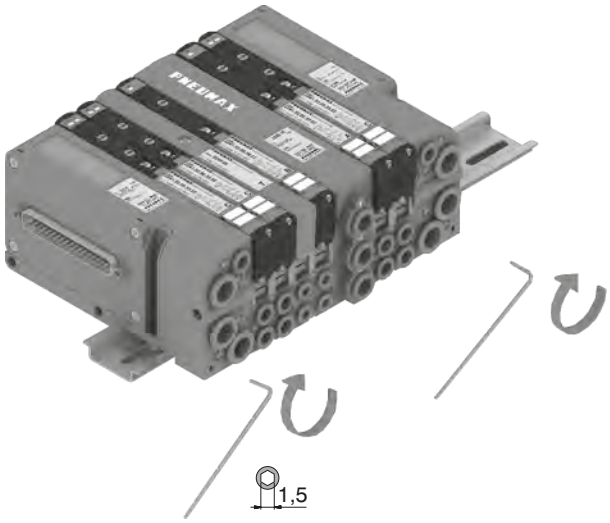

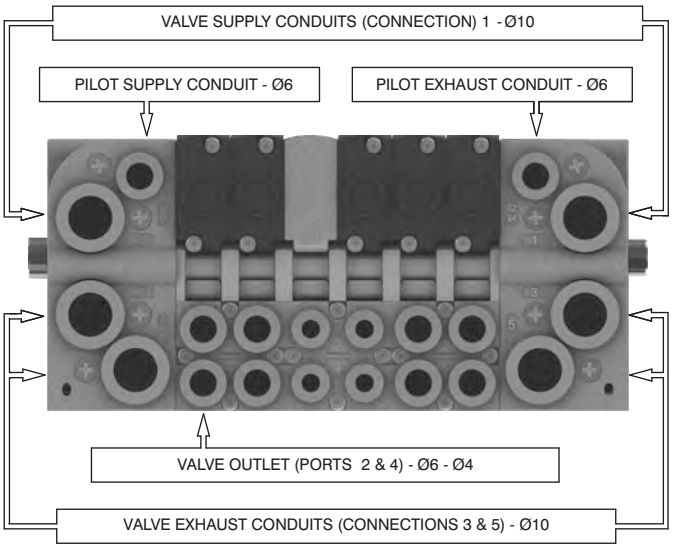

Maximum possible size
According to valves used

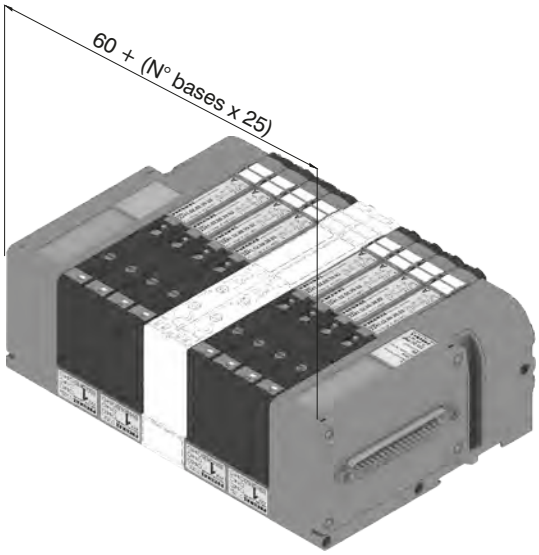

Manual override actuation

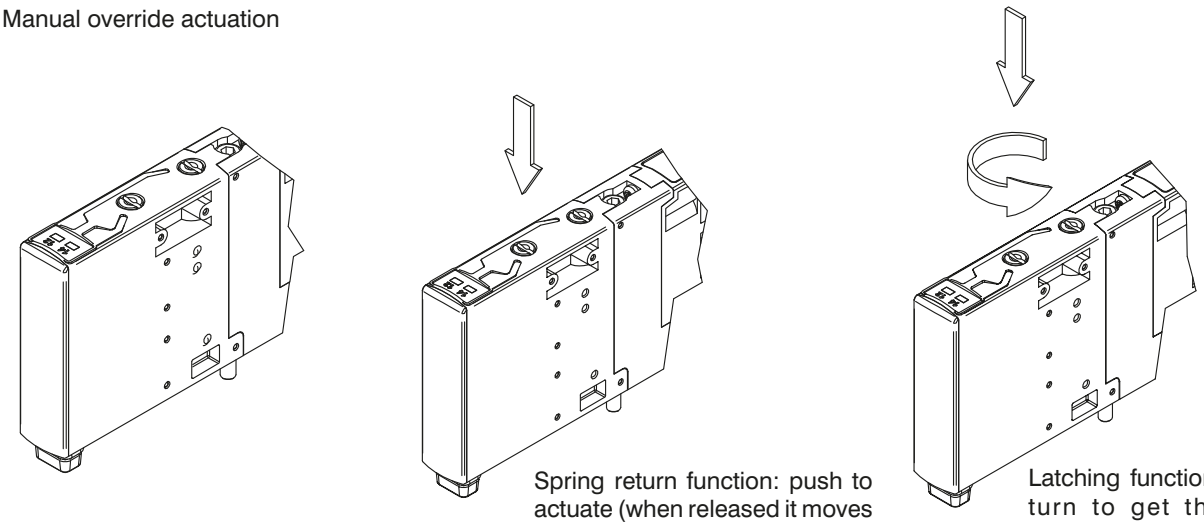

Spring return function: push to actuate (when released it moves back to the original position).

Latching function: push and turn to get the latching function

NOTE : It is strongly suggested to replace the original position after using

Valve Installation

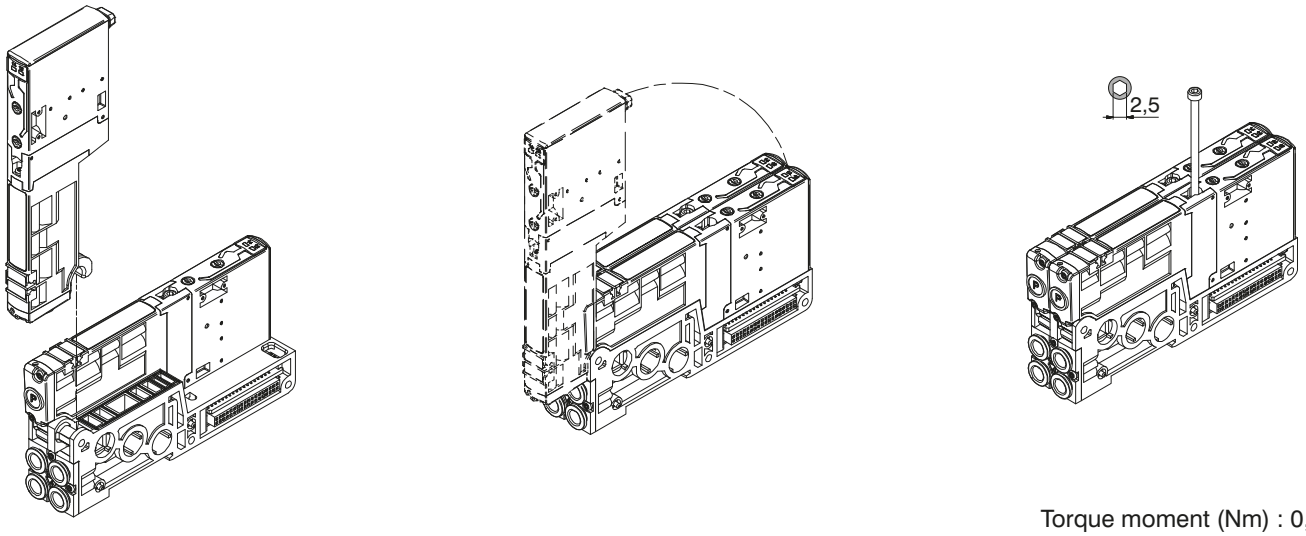

Torque moment (Nm) : 0,8

Manifold assembly

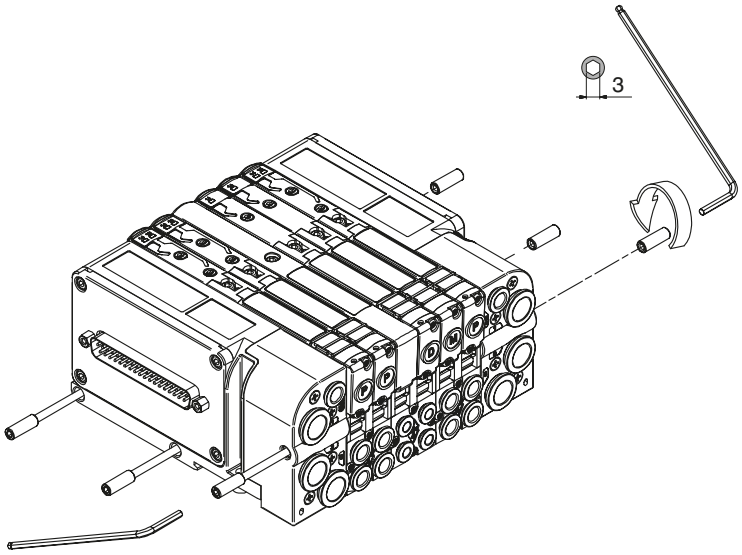

Min. torque moment : 2 Nm
Max. torque moment: 2,5 Nm

Overall dimensions and technical information are provided solely for informative purposes and may be modified without notice

Manifold Layout configuration

MULTIPOINT CONNECTION

MP = PNP 24 V DC
MN = NPN 24 V DC
MA = 24 V AC

LEFT ENDPLATE

A2 = 25 poles - Self feeding
A3 = 37 poles - Self feeding
E2 = 25 poles - External feeding
E3 = 37 poles - External feeding

RIGHT ENDPLATE

U0 = Closed
U2 = 25 Poles

I/O MODULE

M8
(Requires 25 poles right endplate)

S _ . _ . _ _ _ . . . _ _ _ . _ . _ _

MODUL CONFIGURATION

Sub-base type | Valve type

ACCESSORIES CONFIGURATION

SUB-BASE TYPE

3 = 2 Position Monostable sub base ø4 (2 electric signal used)
4 = 2 Position Bistable sub base ø4 (4 electric signals used)
5 = 2 Position Monostable sub base ø6 (2 electric signal used)
6 = 2 Position Bistable sub base ø6 (4 electric signals used)
7 = 2 Position Monostable sub base ø8 (2 electric signal used)
8 = 2 Position Bistable sub base ø8 (4 electric signals used)

VALVES TYPE

A = 5/2 Solenoid - Spring
B = 5/2 Solenoid - Differential
C = 5/2 Solenoid - Solenoid
E = 5/3 CC Solenoid - Solenoid

F = 2x3/2 NC-NC (= 5/3 OC) Solenoid - Solenoid
G = 2x3/2 NO-NO (= 5/3 PC) Solenoid - Solenoid
H = 2x3/2 NC-NO Solenoid - Solenoid
I = 2x3/2 NO-NC Solenoid - Solenoid

T = Free valve space plug

ACCESSORIES

W00 = Intermediate supply & exhaust module

0X0 = Diaphragm plug on pipe 1
00Y = Diaphragm plug on pipeE 3
Z00 = Diaphragm plug on pipe 5

0XY = Diaphragm plug on pipe 1 & 3
ZX0 = Diaphragm plug on pipe 5 & 1
Z0Y = Diaphragm plug on pipe 5 & 3
ZXY = Diaphragm plug on pipe 5,1 & 3

SUB-BASE VARIANTS

EMPTY = No variants (SUB-BASE STANDARD)

3 = Diaphragm plug on pipe 1 and 5
4 = Diaphragm plug on pipe 1 and 3
5 = Diaphragm plug on pipe 5
6 = Diaphragm plug on pipe 1, 3 and 5
7 = Diaphragm plug on pipe 1
8 = Diaphragm plug on pipe 3 and 5
9 = Diaphragm plug on pipe 3

NOTE:
While configuring the manifold always be careful that the maximum number of electrical signals available is 32
The use of monostable valve mounted on a bistable base (2 electrical signals occupied for each position) causes the loss of one electric signal.
In this case the monostable valve can be replaced by a bistable valve without reconfiguring the PLC.
The diaphragms plugs are used to intercept the conduits 1,3 & 5 of the base.
Should one or more conduits be cut more than one time it is necessary to add the relevant intermediate Supply/Exhaust module.

Series 2200 OPTYMA-S solenoid valve manifolds managed by multipoint connection are "well tried components"

	Well-tried component	- The product is a well-tried product for a safety-related application according to ISO 13849-1. - The relevant basic and well-tried safety principles according ISO 13849-2 for this product are fulfilled. - The suitability of the product for a precise application must be verified and confirmed by the user.
B_{10d}	50.000.000	

General:

CANopen® module is directly integrated on Optyma-S solenoid valves manifold via a 37 poles connector, normally used for multipolar cable connection.
Optyma-S solenoid valves connected to node must be PNP equivalent (final 02 in ordering code).
The node can be easily installed also on solenoid valves manifold already mounted on equipment.
Module can manage up to 32 solenoid valves, and, in the same time, a max number of 4 Input modules 5222.08S.
CANopen® module recognizes automatically the presence of the Input modules on power on.
Regardless of the number of Input modules connected, the managable solenoid valves are 32.
Node power supply is made by a M12 4P male circular connector.
The separation between node 24 VDC Power supply and outputs 24 VDC allows to switch off the outputs maintaning powered the node and inputs, if present.
Connection to Bus CANopen® is possible via 2 M12 5P male - female circular connectors; these two are connected in parallel and according to CiA Draft Recommendation 303-1 (V. 1.3 : 30 December 2004).
Transmission speed can be set by 3 dip-switches.
The node address can be set by 6 dip-switches using BCD numeration.
The module includes an internal terminating resistance that can be activated by a dip-switch.

Ordering code

5522.32S

Scheme / Overall dimensions and I/O layout :

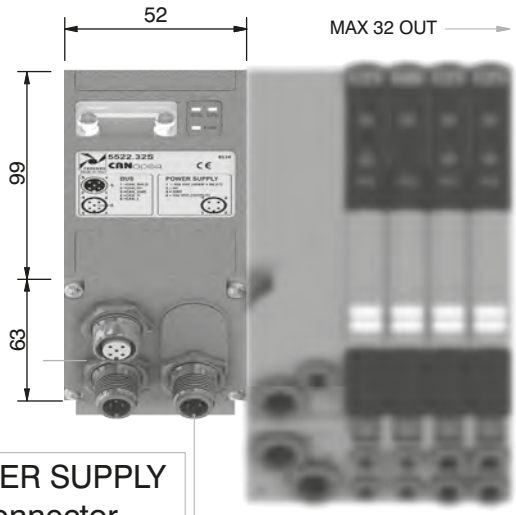

NETWORK connectors

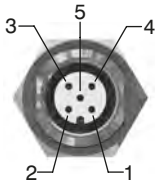

M12 5P FEMALE

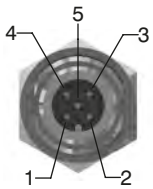

M12 5P MALE

PIN	SIGNAL	DESCRIPTION
1	CAN_SHLD	Optional CAN Shield
2	CAN_V+	Optional CAN external positive supply (Dedicated for supply of transceiver and Optocouplers, if galvanic isolation of the bus node applies)
3	CAN_GND	Ground / 0V / V-
4	CAN_H	CAN_H bus line (dominant high)
5	CAN_L	CAN_L bus line (dominant low)

POWER SUPPLY connector

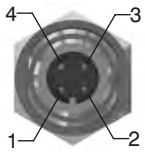

M15 4P MALE

PIN	DESCRIPTION
1	+24 VDC (NODE & INPUTS)
2	NC
3	GND
4	+24 VDC (OUTPUTS)

Technical characteristics

	Model	5522.32S
	Specifications	CiA Draft Standard Proposal 301 V 4.10 (15 August 2006)
	Case	Reinforced technopolymer
Power supply	Power supply connection	M12 4P male connector (IEC 60947-5-2)
	Power supply voltage	+24 VDC +/- 10%
	Node consumption (without inputs)	30 mA
	Power supply diagnosis	Green LED PWR
Outputs	PNP equivalent outputs	+24 VDC +/- 10%
	Maximum current for each output	100 mA
	Maximum output number	32
	Max output simultaneously actuated	32
Network	Network connectors	2 M12 5P connectors male-female Type A (IEC 60947-5-2)
	Baud rate	10 - 20 - 50 - 125 - 250 - 500 - 800 - 1000 Kbit/s
	Addresses, possible numbers	From 1 to 63
	Max nodes in net	64 (slave + master)
	Bus maximum recommended length	100 m at 500 Kbit/s
	Bus diagnosis	Green LED + Red LED
	Configuration file	Available from our web site: http://www.pneumaxspa.com
	IP protection grade	IP65 when assembled
	Temperature range	From 0° to +50° C

Overall dimensions and technical information are provided solely for informative purposes and may be modified without notice

General:

DeviceNet module is directly integrated on Optyma-S solenoid valves manifold via a 37 poles connector, normally used for multipolar cable connection.
Optyma-S solenoid valves connected to node must be PNP equivalent (final 02 in ordering code).
The node can be easily installed also on solenoid valves manifold already mounted on equipment.
Module can manage up to 32 solenoid valves, and, in the same time, a max number of 4 Input modules 5222.08S.
DeviceNet module recognizes automatically the presence of the Input modules on power on.
Regardless of the number of Input modules connected, the managable solenoid valves are 32.
Node power supply is made by a M12 4P male circular connector.
The separation between node 24 VDC Power supply and outputs 24 VDC allows to switch off the outputs maintaning powered the node and inputs, if present.
Connection to Bus DeviceNet is possible via 2 M12 5P male - female circular connectors; these two are connected in parallel and according to DeviceNet Specifications Volume I, release 2.0.
Transmission speed can be set by 3 dip-switches.
The node address can be set by 6 dip-switches using BCD numeration.
The module includes an internal terminating resistance that can be activated by a dip-switch.

Ordering code

5422.32S

Scheme / Overall dimensions and I/O layout :

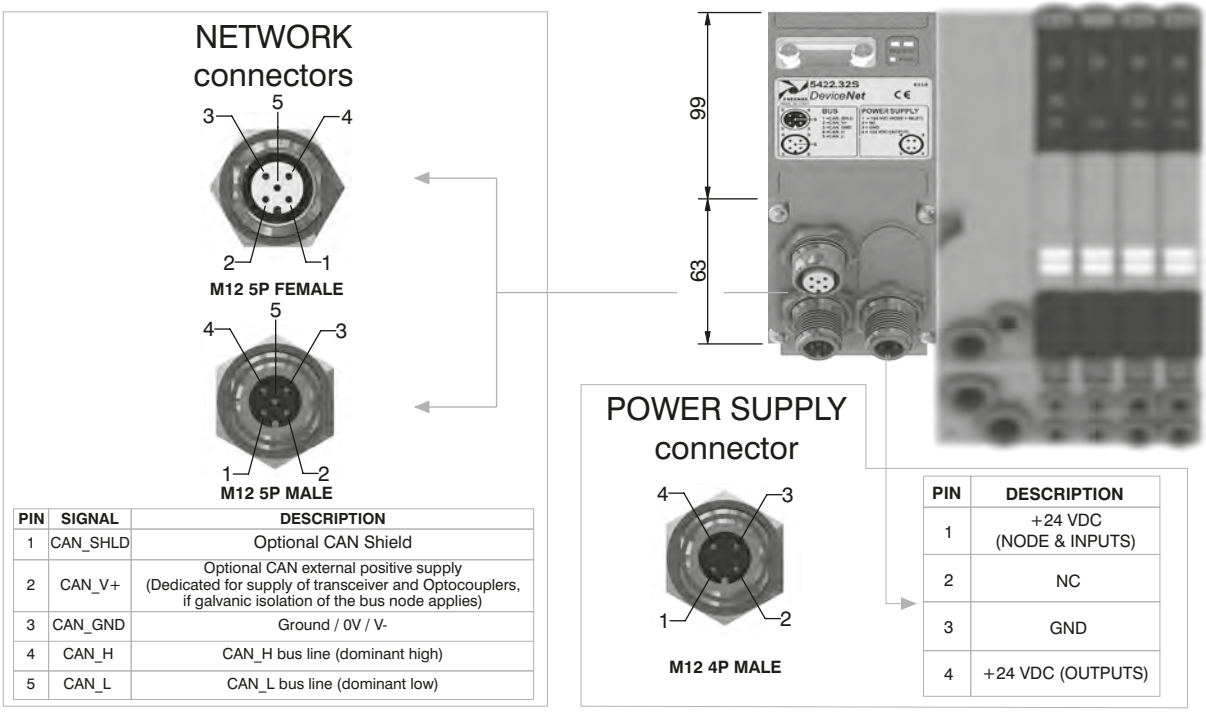

PIN	SIGNAL	DESCRIPTION
1	CAN_SHLD	Optional CAN Shield
2	CAN_V+	Optional CAN external positive supply (Dedicated for supply of transceiver and Optocouplers, if galvanic isolation of the bus node applies)
3	CAN_GND	Ground / 0V / V-
4	CAN_H	CAN_H bus line (dominant high)
5	CAN_L	CAN_L bus line (dominant low)

PIN	DESCRIPTION
1	+24 VDC (NODE & INPUTS)
2	NC
3	GND
4	+24 VDC (OUTPUTS)

Technical characteristics

	Model	5422.32S
	Specifications	DeviceNet Specifications Volume I, release 2.0.
	Case	Reinforced technopolymer
Power supply	Power supply connection	M12 4P male connector (IEC 60947-5-2)
	Power supply voltage	+24 VDC +/- 10%
	Node consumption (without inputs)	30 mA
	Power supply diagnosis	Green LED PWR
Outputs	PNP equivalent outputs	+24 VDC +/- 10%
	Maximum current for each output	100 mA
	Maximum output number	32
	Max output simultaneously actuated	32
Network	Network connectors	2 M12 5P connectors male-female Type A (IEC 60947-5-2)
	Baud rate	125 - 250 - 500 Kbit/s
	Addresses, possible numbers	From 1 to 63
	Max nodes in net	64 (slave + master)
	Bus maximum recommended length	100 m at 500 Kbit/s
	Bus diagnosis	Green LED + Red LED
	Configuration file	Available from our web site: http://www.pneumaxspa.com
	IP protection grade	IP65 when assembled
	Temperature range	From 0° to +50° C

Overall dimensions and technical information are provided solely for informative purposes and may be modified without notice

General:

PROFIBUS DP module is directly integrated on Optyma-S solenoid valves manifold via a 37 poles connector, normally used for multipolar cable connection.
Optyma-S solenoid valves connected to node must be PNP equivalent (final 02 in ordering code).
The node can be easily installed also on solenoid valves manifold already mounted on equipment.
Module can manage up to 32 solenoid valves, and, in the same time, a max number of 4 Input modules 5222.08S.
PROFIBUS DP module recognizes automatically the presence of the Input modules on power on.
Regardless of the number of Input modules connected, the managable solenoid valves are 32.
Node power supply is made by a M12 4P male circular connector.
The separation between node 24 VDC Power supply and outputs 24 VDC allows to switch off the outputs maintaning powered the node and inputs, if present.
Connection to Bus PROFIBUS DP is possible via 2 M12 type B 5P male - female circular connectors; these two are connected in parallel and according to PROFIBUS Interconnection Technology (Version 1.1 : August 2001).
The node address can be set using BCD numeration: 4 dip-switches for the units and 4 dip-switches for the tens.
The module includes an internal terminating resistance that can be activated by a dip-switch.

Ordering code

5322.32S

Scheme / Overall dimensions and I/O layout :

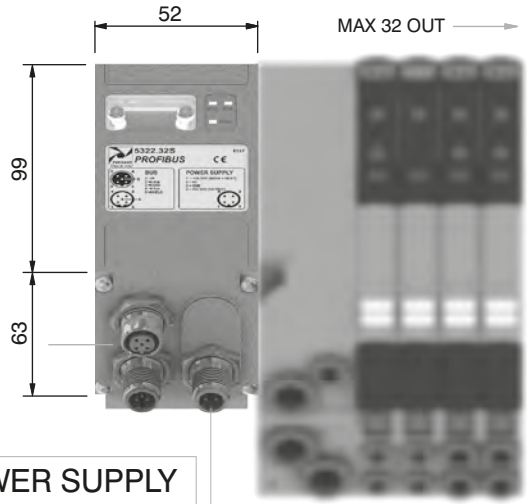

NETWORK connectors

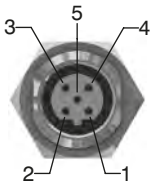

M12 5P FEMALE

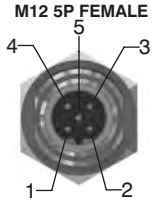

M12 5P MALE

PIN	SIGNAL	DESCRIPTION
1	VP	Power supply plus, (P5V)
2	A-line	Receive / Transmit data -N, A-line
3	DGND	Data Ground (reference potential to VP)
4	B-line	Receive / Transmit data -plus, B-line
5	SHIELD	Shield or PE

POWER SUPPLY connector

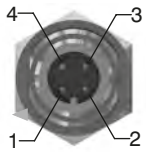

M12 4P MALE

PIN	DESCRIPTION
1	+24 VDC (NODE & INPUTS)
2	NC
3	GND
4	+24 VDC (OUTPUTS)

Technical characteristics

	Model	5322.32S
	Specifications	PROFIBUS DP
	Case	Reinforced technopolymer
Power supply	Power supply connection	M12 4P male connector (IEC 60947-5-2)
	Power supply voltage	+24 VDC +/- 10%
	Node consumption (without inputs)	50 mA
	Power supply diagnosis	Green LED PWR
Outputs	PNP equivalent outputs	+24 VDC +/- 10%
	Maximum current for each output	100 mA
	Maximum output number	32
	Max output simultaneously actuated	32
Network	Network connectors	2 M12 5P male-female connectors Type B
	Baud rate	9,6 - 19,2 - 93,75 - 187,5 - 500 - 1500 - 3000 - 6000 - 12000 Kbit/s
	Addresses, possible numbers	From 1 to 99
	Max nodes in net	100 (slave + master)
	Bus maximum recommended length	100 m at 12 Mbit/s - 1200 m at 9,6 Kbit/s
	Bus diagnosis	Green LED + Red LED
	Configuration file	Available from our web site: http://www.pneumaxspa.com
	IP protection grade	IP65 when assembled
	Temperature range	From 0° to +50° C

Overall dimensions and technical information are provided solely for informative purposes and may be modified without notice

General:

EtherCAT® module is directly integrated on Optyma-S solenoid valves manifold via a 37 poles connector, normally used for multipolar cable connection.
Optyma-S solenoid valves connected to node must be PNP equivalent (final 02 in ordering code).
The node can be easily installed also on solenoid valves manifold already mounted on equipment.
Module can manage up to 32 solenoid valves, and, in the same time, a max number of 4 Input modules 5222.08S.
The EtherCAT® module, regardless the number of Input module connected, reports to have connected 4 Input modules.
Regardless of the number of Input modules connected, the managable solenoid valves are 32.
Node power supply is made by a M12 4P male circular connector.
The separation between node 24 VDC Power supply and outputs 24 VDC allows to switch off the outputs maintaning powered the node and inputs, if present.
Connection to Bus EtherCAT® is possible via 2 M12 4P type D female circular connectors. These two connectors lead the signal to two different communication ports, so they are not connected in parallel.
The node address is assigned during configuration.
Note: 5700 series has a different configuration file from series 5600.

Ordering code

5722.32S.EC

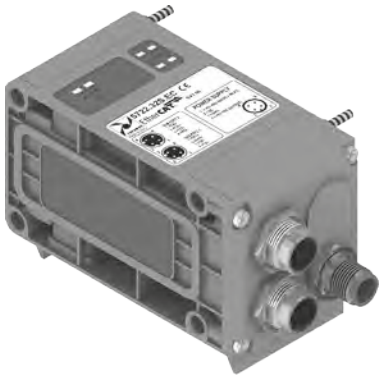

Scheme / Overall dimensions and I/O layout :

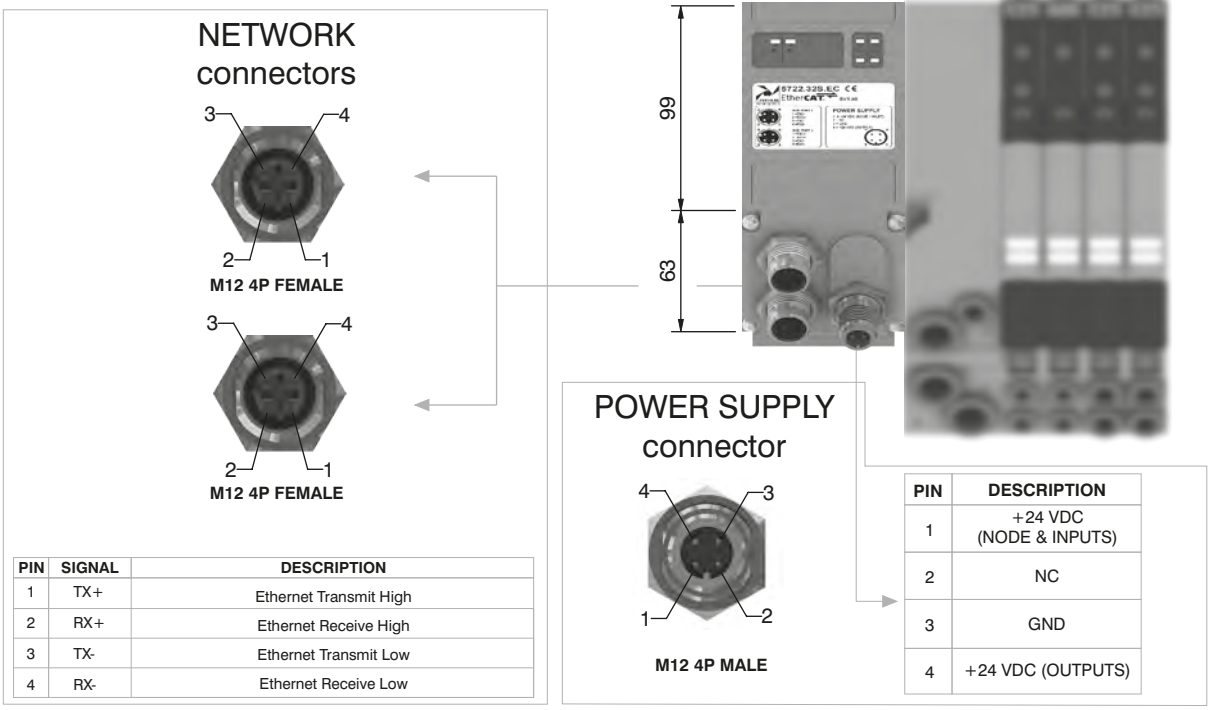

PIN	SIGNAL	DESCRIPTION
1	TX+	Ethernet Transmit High
2	RX+	Ethernet Receive High
3	TX-	Ethernet Transmit Low
4	RX-	Ethernet Receive Low

PIN	DESCRIPTION
1	+24 VDC (NODE & INPUTS)
2	NC
3	GND
4	+24 VDC (OUTPUTS)

Technical characteristics

	Model	5722.32S.EC
	Specifications	EtherCAT® Specifications ETG.1000 series
	Case	Reinforced technopolymer
Power supply	Power supply connection	M12 4P male connector (IEC 60947-5-2)
	Power supply voltage	+24 VDC +/- 10%
	Node consumption (without inputs)	400 mA
	Power supply diagnosis	Green LED PWR / Green LED OUT
Outputs	PNP equivalent outputs	+24 VDC +/- 10%
	Maximum current for each output	100 mA
	Maximum output number	32
	Max output simultaneously actuated	32
Network	Network connectors	2 M12 4P female connectors Type D (IEC 61076-2-101)
	Baud rate	100 Mbit/s
	Addresses, possible numbers	From 1 to 65535
	Max nodes in net	65536 (Master + Slave)
	Maximum distance between 2 nodes	100 m
	Bus diagnosis	1 green and 1 red LED for status + 2 LEDs for link & activity
	Configuration file	Available from our web site: http://www.pneumaxspa.com
	IP protection grade	IP65 when assembled
	Temperature range	From 0° to +50° C

General:

PROFINET IO RT module is directly integrated on Optyma-S solenoid valves manifold via a 37 poles connector, normally used for multipolar cable connection.
Optyma-S solenoid valves connected to node must be PNP equivalent (final 02 in ordering code).
The node can be easily installed also on solenoid valves manifold already mounted on equipment.
Module can manage up to 32 solenoid valves, and, in the same time, a max number of 4 Input modules 5222.08S.
The PROFINET IO RT module, regardless the number of Input module connected, reports to have connected 8 Input modules.
Regardless of the number of Input modules connected, the managable solenoid valves are 32.
Node power supply is made by a M12 4P male circular connector.
The separation between node 24 VDC Power supply and outputs 24 VDC allows to switch off the outputs maintaning powered the node and inputs, if present.
Connection to Bus PROFINET IO RT is possible via 2 M12 4P type D female circular connectors. These two connectors lead the signal to two different communication ports, so they are not connected in parallel.
The node address is assigned during configuration.

Ordering code

5722.32S.PN

Scheme / Overall dimensions and I/O layout :

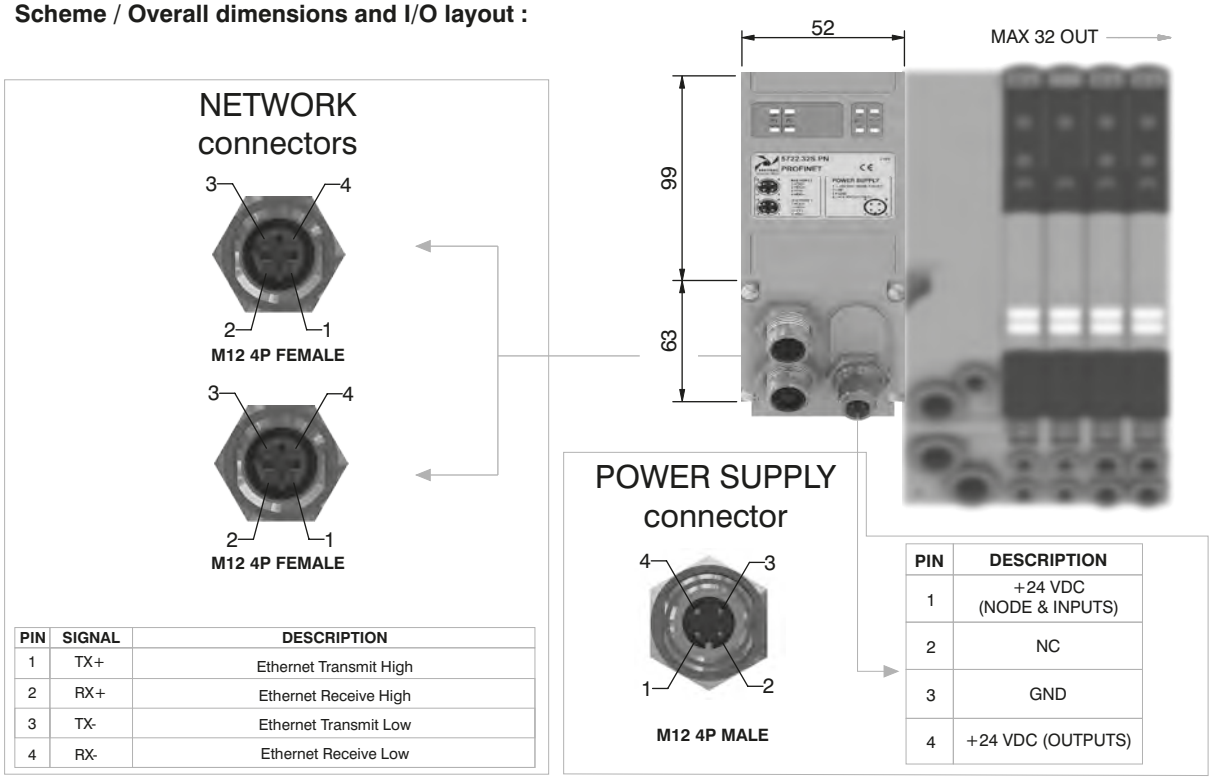

PIN	SIGNAL	DESCRIPTION
1	TX+	Ethernet Transmit High
2	RX+	Ethernet Receive High
3	TX-	Ethernet Transmit Low
4	RX-	Ethernet Receive Low

PIN	DESCRIPTION
1	+24 VDC (NODE & INPUTS)
2	NC
3	GND
4	+24 VDC (OUTPUTS)

Technical characteristics

	Model	5722.32S.PN
	Specifications	PROFINET IO RT/IRT
	Case	Reinforced technopolymer
Power supply	Power supply connection	M12 4P male connector (IEC 60947-5-2)
	Power supply voltage	+24 VDC +/- 10%
	Node consumption (without inputs)	400 mA
	Power supply diagnosis	Green LED PWR / Green LED OUT
Outputs	PNP equivalent outputs	+24 VDC +/- 10%
	Maximum current for each output	100 mA
	Maximum output number	32
	Max output simultaneously actuated	32
Network	Network connectors	2 M12 4P female connectors Type D (IEC 61076-2-101)
	Baud rate	100 Mbit/s
	Addresses, possible numbers	As an IP address
	Max nodes in net	As an Ethernet Network
	Maximum distance between 2 nodes	100 m
	Bus diagnosis	1 green and 1 red LED for status + 4 LEDs for link & activity
	Configuration file	Available from our web site: http://www.pneumaxspa.com
	IP protection grade	IP65 when assembled
	Temperature range	From 0° to +50° C

Overall dimensions and technical information are provided solely for informative purposes and may be modified without notice

General:

EtherNet/IP module is directly integrated on Optyma-S solenoid valves manifold via a 37 poles connector, normally used for multipolar cable connection.
Optyma-S solenoid valves connected to node must be PNP equivalent (final 02 in ordering code).
The node can be easily installed also on solenoid valves manifold already mounted on equipment.
Module can manage up to 32 solenoid valves, and, in the same time, a max number of 4 Input modules 5222.08S.
The EtherNet/IP module, regardless the number of Input module connected, reports to have connected 8 Input modules.
Regardless of the number of Input modules connected, the managable solenoid valves are 32.
Node power supply is made by a M12 4P male circular connector.
The separation between node 24 VDC Power supply and outputs 24 VDC allows to switch off the outputs maintaning powered the node and inputs, if present.
Connection to Bus EtherNet/IP is possible via 2 M12 4P type D female circular connectors. These two connectors lead the signal to two different communication ports, so they are not connected in parallel.
The node address is assigned during configuration.

Ordering code

5722.32S.EI

Scheme / Overall dimensions and I/O layout :

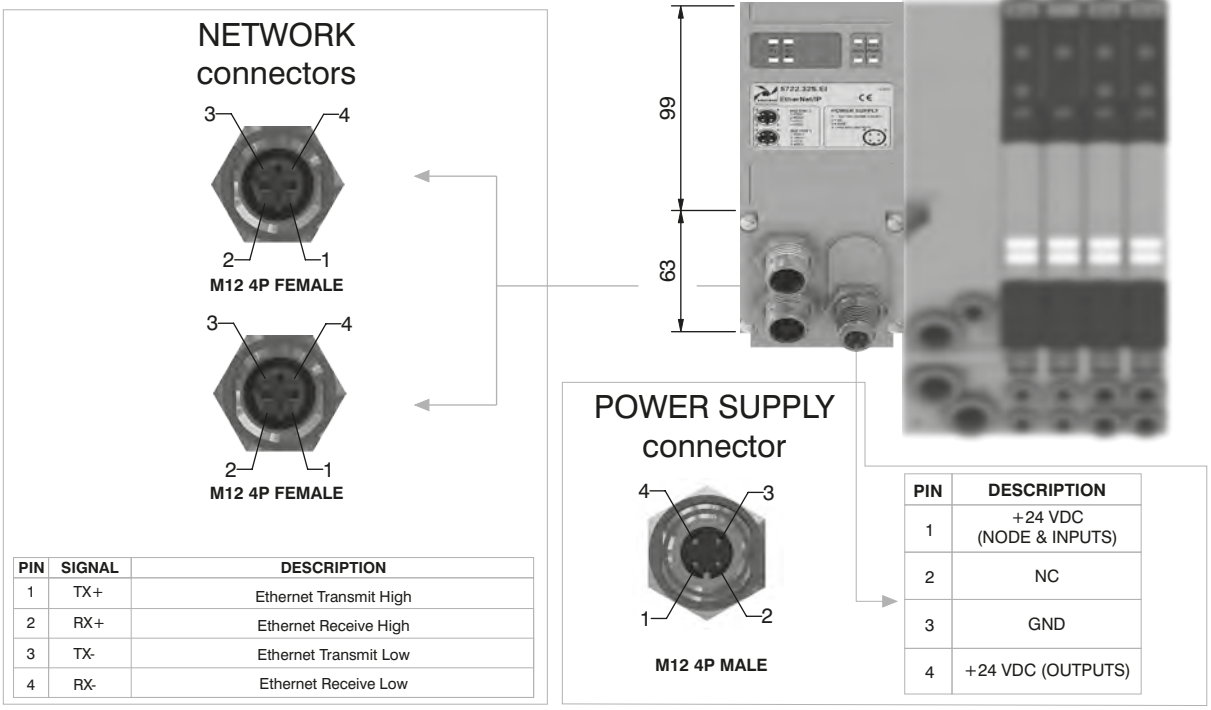

PIN	SIGNAL	DESCRIPTION
1	TX+	Ethernet Transmit High
2	RX+	Ethernet Receive High
3	TX-	Ethernet Transmit Low
4	RX-	Ethernet Receive Low

PIN	DESCRIPTION
1	+24 VDC (NODE & INPUTS)
2	NC
3	GND
4	+24 VDC (OUTPUTS)

Technical characteristics

	Model	5722.32S.EI
	Specifications	The EtherNet/IP Specification
	Case	Reinforced technopolymer
Power supply	Power supply connection	M12 4P male connector (IEC 60947-5-2)
	Power supply voltage	+24 VDC +/- 10%
	Node consumption (without inputs)	400 mA
	Power supply diagnosis	Green LED PWR / Green LED OUT
Outputs	PNP equivalent outputs	+24 VDC +/- 10%
	Maximum current for each output	100 mA
	Maximum output number	32
	Max output simultaneously actuated	32
Network	Network connectors	2 M12 4P female connectors Type D (IEC 61076-2-101)
	Baud rate	100 Mbit/s
	Addresses, possible numbers	As an IP address
	Max nodes in net	As an Ethernet Network
	Maximum distance between 2 nodes	100 m
	Bus diagnosis	1 green and 1 red LED for status + 4 LEDs for link & activity
	Configuration file	Available from our web site: http://www.pneumaxspa.com
	IP protection grade	IP65 when assembled
	Temperature range	From 0° to +50° C

General:

Powerlink module is directly integrated on Optyma-S solenoid valves manifold via a 37 poles connector, normally used for multipolar cable connection.
Optyma-S solenoid valves connected to node must be PNP equivalent (final 02 in ordering code).
The node can be easily installed also on solenoid valves manifold already mounted on equipment.
Module can manage up to 32 solenoid valves, and, in the same time, a max number of 4 Input modules 5222.08S.
The Powerlink module, regardless the number of Input module connected, reports to have connected 8 Input modules.
Regardless of the number of Input modules connected, the managable solenoid valves are 32.
Node power supply is made by a M12 4P male circular connector.
The separation between node 24 VDC Power supply and outputs 24 VDC allows to switch off the outputs maintaning powered the node and inputs, if present.
Connection to Bus Powerlink is possible via 2 M12 4P type D female circular connectors. These two connectors lead the signal to two different communication ports, so they are not connected in parallel.
The node address is assigned during configuration.

Ordering code

5722.32S.PL

Scheme / Overall dimensions and I/O layout :

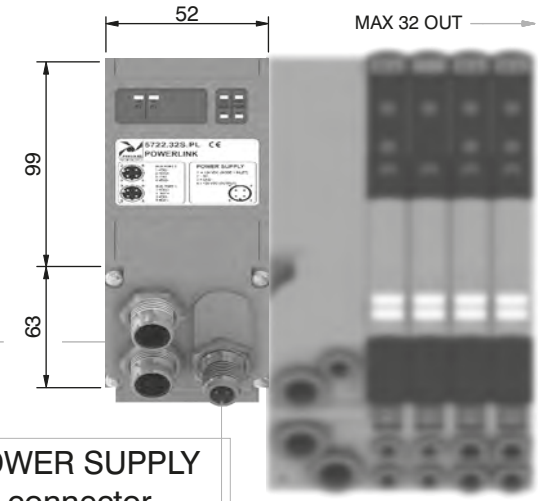

NETWORK connectors

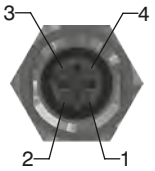

M12 4P FEMALE

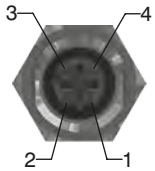

M12 4P FEMALE

PIN	SIGNAL	DESCRIPTION
1	TX+	Ethernet Transmit High
2	RX+	Ethernet Receive High
3	TX-	Ethernet Transmit Low
4	RX-	Ethernet Receive Low

POWER SUPPLY connector

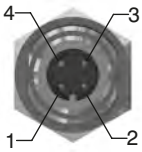

M12 4P MALE

PIN	DESCRIPTION
1	+24 VDC (NODE & INPUTS)
2	NC
3	GND
4	+24 VDC (OUTPUTS)

Technical characteristics

	Model	5722.32S.PL
	Specifications	Ethernet POWERLINK Communication Profile Specifications
	Case	Reinforced technopolymer
Power supply	Power supply connection	M12 4P male connector (IEC 60947-5-2)
	Power supply voltage	+24 VDC +/- 10%
	Node consumption (without inputs)	400 mA
	Power supply diagnosis	Green LED PWR / Green LED OUT
Outputs	PNP equivalent outputs	+24 VDC +/- 10%
	Maximum current for each output	100 mA
	Maximum output number	32
	Max output simultaneously actuated	32
Network	Network connectors	2 M12 4P female connectors Type D (IEC 61076-2-101)
	Baud rate	100 Mbit/s
	Addresses, possible numbers	239
	Max nodes in net	240
	Maximum distance between 2 nodes	100 m
	Bus diagnosis	1 green and 1 red LED for status + 2 LEDs for link & activity
	Configuration file	Available from our web site: http://www.pneumaxspa.com
	IP protection grade	IP65 when assembled
	Temperature range	From 0° to +50° C

Overall dimensions and technical information are provided solely for informative purposes and may be modified without notice

General:

Modbus/TCP module is directly integrated on Optyma-S solenoid valves manifold via a 37 poles connector, normally used for multipolar cable connection.
Optyma-S solenoid valves connected to node must be PNP equivalent (final 02 in ordering code).
The node can be easily installed also on solenoid valves manifold already mounted on equipment.
Module can manage up to 32 solenoid valves, and, in the same time, a max number of 4 Input modules 5222.08S.
The Modbus/TCP module, regardless the number of Input module connected, reports to have connected 8 Input modules.
Regardless of the number of Input modules connected, the managable solenoid valves are 32.
Node power supply is made by a M12 4P male circular connector.
The separation between node 24 VDC Power supply and outputs 24 VDC allows to switch off the outputs maintaning powered the node and inputs, if present.
Connection to Bus Modbus/TCP is possible via 2 M12 4P type D female circular connectors. These two connectors lead the signal to two different communication ports, so they are not connected in parallel.
The node address is assigned during configuration.

Ordering code

5722.32S.MT

Scheme / Overall dimensions and I/O layout :

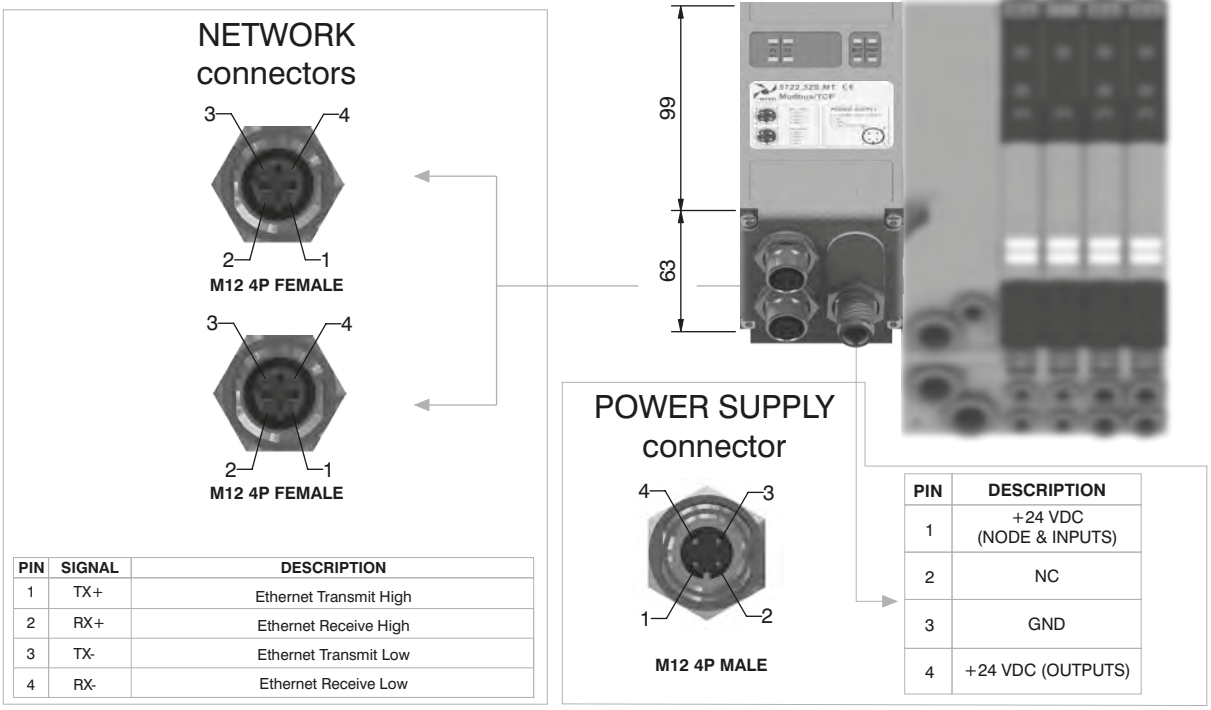

PIN	SIGNAL	DESCRIPTION
1	TX+	Ethernet Transmit High
2	RX+	Ethernet Receive High
3	TX-	Ethernet Transmit Low
4	RX-	Ethernet Receive Low

PIN	DESCRIPTION
1	+24 VDC (NODE & INPUTS)
2	NC
3	GND
4	+24 VDC (OUTPUTS)

Technical characteristics

	Model	5722.32S.MT
	Specifications	MODBUS Application Protocol Specification V1.1a, June 4, 2004
	Case	Reinforced technopolymer
Power supply	Power supply connection	M12 4P male connector (IEC 60947-5-2)
	Power supply voltage	+24 VDC +/- 10%
	Node consumption (without inputs)	400 mA
	Power supply diagnosis	Green LED PWR / Green LED OUT
Outputs	PNP equivalent outputs	+24 VDC +/- 10%
	Maximum current for each output	100 mA
	Maximum output number	32
	Max output simultaneously actuated	32
Network	Network connectors	2 M12 4P female connectors Type D (IEC 61076-2-101)
	Baud rate	100 Mbit/s
	Addresses, possible numbers	248
	Max nodes in net	248
	Maximum distance between 2 nodes	100 m
	Bus diagnosis	1 green and 1 red LED for status + 2 LEDs for link & activity
	Configuration file	Modbus/TCP nodes don't require configuration file
	IP protection grade	IP65 when assembled
	Temperature range	From 0° to +50° C

General:

IO-Link module is directly integrated on Optyma-S solenoid valves manifold via a 37 poles connector, normally used for multipolar cable connection.
Optyma-S solenoid valves connected to node must be PNP equivalent (final 02 in ordering code).
The node can be easily installed also on solenoid valves manifold already mounted on equipment.
Module can manage up to 32 solenoid valves, and, in the same time, a max number of 4 Input modules 5222.08S.
Regardless of the number of Input modules connected, the managable solenoid valves are 32.
Valve power supply will be provided through an external M12, 5 poles, A type connector, directly through the communication connector for Class B port option.
IO-Link module support the IO-Link communications speed COM2.
IODD configuration files will be provided by Pneumax.

Ordering code

5822.32S

Scheme / Overall dimensions and I/O layout :

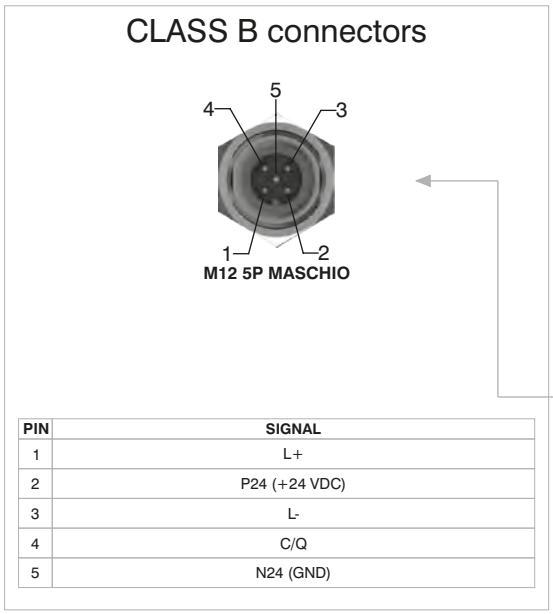

PIN	SIGNAL
1	L+
2	P24 (+24 VDC)
3	L-
4	C/Q
5	N24 (GND)

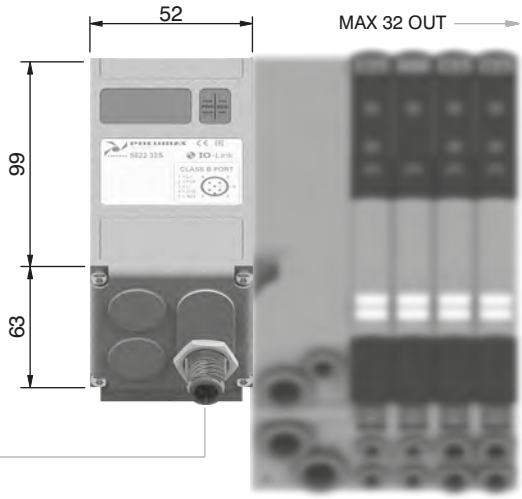

Technical characteristics

	Specifications	IO-Link Specification v1.1
	Case	Reinforced technopolymer
Outputs	PNP equvalent outputs	+24 VDC +/- 10%
	Maximum current for each output	100 mA
	Maximum output number	32
	Max output simultaneously actuated	32
Network	Network connectors	Class B ports
	Comunication speed	COM 2
	Maximum distance from Master	20 m
	Bus diagnosis	1 green and 1 red LED for status
	Configuration file IODD	Available from our web site: http://www.pneumaxspa.com
	IP protection grade	IP65 when assembled
	Temperature range	From 0° to +50° C

Overall dimensions and technical information are provided solely for informative purposes and may be modified without notice

General:

Modules have 8 connectors M8 3P female.

The Inputs are PNP equivalent 24 VDC ±10%.
To each connector it is possible to plug both 2 wires Inputs (switches, magnetic switches pressure switches, etc) or 3 wires Inputs (proximity, photocells, electronic sensors, etc).
The maximum current available for all 8 Inputs is 300 mA.
Each module includes a 300 mA self-mending fuse. If a short circuit or a overcharge (overall current >300mA) occur the safety device acts cutting the 24 VDC power supply to all M8 connectors on the module and switching off the green LED PWR. Any other Input module connected to the node will remain powered and will function correctly.
Once the cause of the fault disappears the green LED PWR lights up indicating the ON state and the node will re-start to operate.
The maximum number of Input modules supported is 4.

Ordering code

5222.08S

Scheme / Overall dimensions and I/O layout :

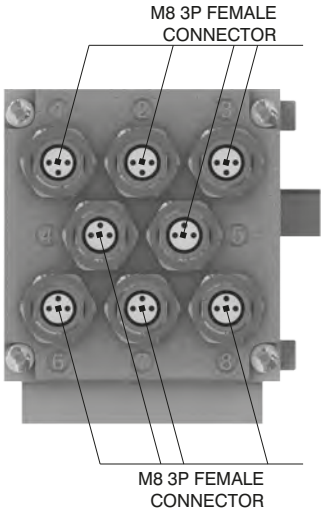

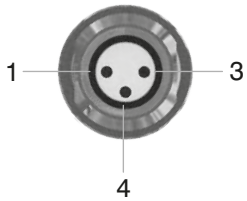

PIN	DESCRIPTION
1	+24 VDC
4	INPUT
3	GND

Module 1

Module 2 Module 1

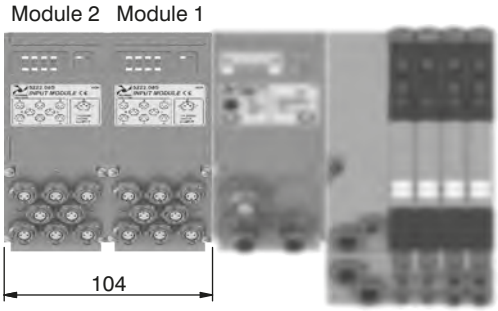

Module 3 Module 2 Module 1

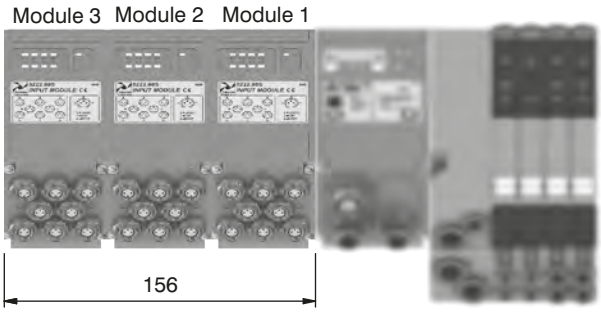

Module 4 Module 3 Module 2 Module 1

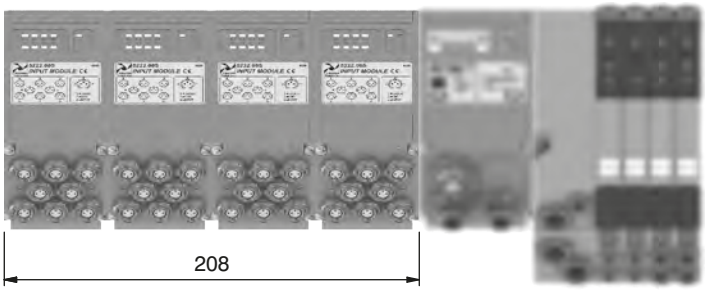

POWER SUPPLY connector

Socket for Power Supply
STRAIGHT CONNECTOR
M12A 4P FEMALE

Ordering code

5312A.F04.00

Upper view
Slave connector

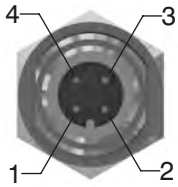

PIN	DESCRIPTION
1	+24 VDC Node
2	
3	0 V
4	+24 VDC Outputs

NETWORK connectors

Socket for Bus CANopen®/DeviceNet
STRAIGHT CONNECTOR
M12A 5P FEMALE

Ordering code

5312A.F05.00

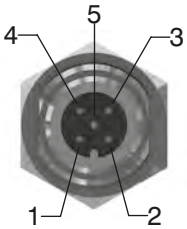

Plug for Bus CANopen®/DeviceNet
STRAIGHT CONNECTOR
M12A 5P MALE

Ordering code

5312A.M05.00

PIN	DESCRIPTION
1	(CAN_SHIELD)
2	(CAN_V+)
3	CAN_GND
4	CAN_H
5	CAN_L

Upper view
Slave connector

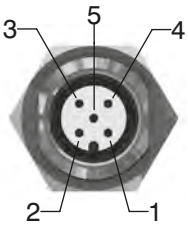

Plug for Bus EtherCAT®,
PROFINET IO RT,
EtherNet/IP and Powerlink
STRAIGHT CONNECTOR M12D 4P MALE

Ordering code

5312D.M04.00

PIN	SIGNAL	DESCRIPTION
1	TX+	Ethernet Transmit High
2	RX+	Ethernet Receive High
3	TX-	Ethernet Transmit Low
4	RX-	Ethernet Receive Low

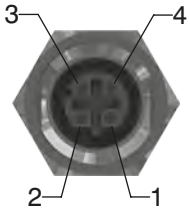

Upper view
Slave connector

Socket for Bus PROFIBUS DP
STRAIGHT CONNECTOR
M12B 5P FEMALE

Ordering code

5312B.F05.00

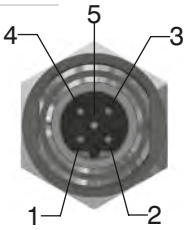

PIN	DESCRIPTION
1	Power Supply
2	A-line
3	DGND
4	B-line
5	SHIELD

Upper view
Slave connector

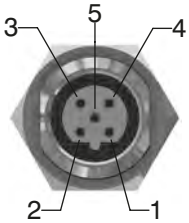

Plug for Bus PROFIBUS DP
STRAIGHT CONNECTOR
M12B 5P MALE

Ordering code

5312B.M05.00

INPUT connectors

Plug for Input module
STRAIGHT CONNECTOR
M8 3P MALE

Ordering code

5308A.M03.00

Upper view
Slave connector

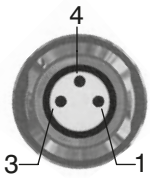

PIN	DESCRIPTION
1	+24 VDC
4	INPUT
3	GND

Plugs

M12 plug

Ordering code

5300.T12

M8 plug

Ordering code

5300.T08

Trademarks: EtherCAT® is registered trademark and patented technology, licensed by Beckhoff Automation GmbH, Germany.

Overall dimensions and technical information are provided solely for informative purposes and may be modified without notice

Manifold Layout configuration with serial systems

32 OUT VERSION

C3=CANopen® 32OUT
D3=DeviceNet 32OUT
P3=PROFIBUS 32OUT
A3=EtherCAT® 32OUT (Series 5700)
I3=EtherNet / IP 32OUT
N3=PROFINET IO RT 32OUT
L3=Powerlink 32OUT
M3=Modbus/TCP 32OUT
K3=IO-Link 32OUT

INPUT MODULES

A = No module
D1= 8 M8 digital inputs module

RIGHT ENDPLATE

U0 = Closed
U2 = 25 Poles

LEFT ENDPLATE

A3 = 37 poles - Self feeding
E3 = 37 poles - External feeding

I/O MODULE

M8
(Requires 25 poles right endplate)

S _ . _ . . . _ . _ . _ _ _ . . . _ _ _ . _ . _ _

MODUL CONFIGURATION

Sub-base type | Valve type

ACCESSORIES CONFIGURATION

SUB-BASE TYPE

3 = 2 Position Monostable sub base ø4 (2 electric signal used)
4 = 2 Position Bistable sub base ø4 (4 electric signals used)
5 = 2 Position Monostable sub base ø6 (2 electric signal used)
6 = 2 Position Bistable sub base ø6 (4 electric signals used)
7 = 2 Position Monostable sub base ø8 (2 electric signal used)
8 = 2 Position Bistable sub base ø8 (4 electric signals used)

SUB-BASE VARIANTS

EMPTY = No variants (SUB-BASE STANDARD)

3 = Diaphragm plug on pipe 1 and 5
4 = Diaphragm plug on pipe 1 and 3
5 = Diaphragm plug on pipe 5
6 = Diaphragm plug on pipe 1, 3 and 5
7 = Diaphragm plug on pipe 1
8 = Diaphragm plug on pipe 3 and 5
9 = Diaphragm plug on pipe 3

VALVES TYPE

A = 5/2 Solenoid - Spring
B = 5/2 Solenoid - Differential
C = 5/2 Solenoid - Solenoid
E = 5/3 CC Solenoid - Solenoid

F = 2x3/2 NC-NC (= 5/3 OC) Solenoid - Solenoid
G = 2x3/2 NO-NO (= 5/3 PC) Solenoid - Solenoid
H = 2x3/2 NC-NO Solenoid - Solenoid
I = 2x3/2 NO-NC Solenoid - Solenoid

T = Free valve space plug

ACCESSORIES

W00 = Intermediate supply & exhaust module

0X0 = Diaphragm plug on pipe 1
00Y = Diaphragm plug on pipeE 3
Z00 = Diaphragm plug on pipe 5

0XY = Diaphragm plug on pipe 1 & 3
ZX0 = Diaphragm plug on pipe 5 & 1
Z0Y = Diaphragm plug on pipe 5 & 3
ZXY = Diaphragm plug on pipe 5,1 & 3

NOTE:
While configuring the manifold always be careful that the maximum number of electrical signals available is 32
The use of monostable valve mounted on a bistable base (2 electrical signals occupied for each position) causes the loss of one electric signal.
In this case the monostable valve can be replaced by a bistable valve without reconfiguring the PLC.
The diaphragms plugs are used to intercept the conduits 1,3 & 5 of the base.
Should one or more conduits be cut more than one time it is necessary to add the relevant intermediate Supply/Exhaust module.

Series 2200 "OPTYMA-Sc"

General

Optyma solenoid valves series it's completed by "Compact" version. It is useful in case a limited number of solenoid valves is needed without managing input and output signals.
Standard base blocks provide 4 or 6 solenoid valves positions. Standard base blocks can be individually sold even without solenoid valves to allow maximum configuration flexibility.
Solenoid valves can be chosen from whole Opytma-S range.
Manifolds made in this way allow great room and weight saving against corrispondent pneumatic group from Optyma-S series.

- Flow rate: up to 550[Nl/min], using the modular base with Ø8 quick fitting tube.
- Modular base available with Ø4, Ø6, Ø8 quick fitting tube.
- The solenoid pilots are low consumption and fitted on the same side of the valve.
- Mono and bistable valves have the same dimension.
- Easy and fast assembly on the sub base thanks to the “one screw” mounting solution.
- Possibility to replace a valve without the need of disconnecting the pneumatic pipes.
- Electrical and pneumatic connections positioned on the same side.
- Possibility to operate with different pressures and vacuum.
- 4 or 6 electric signals management (two signals per position, indipendently of the mounted solenoid valve).
- The ectrical connection is achieved thanks to a 9 or 15 poles connector.
- The protection grade is IP65 directly integrated in the manifold components.

“Shifting time of pneumatic directional control valves or moving parts, logic devices were measured in accordance to ISO 12238:2001, Pneumatic fluid power-Directional control valves-Measurement of shifting time”

Main characteristics

One size: 12.5mm thick
Monostable and bistable valves with same dimensions
Modular subbase with two positions
Quick coupling connections directly integrated in sub base
Integrated and optimized electrical connection system.
IP65 protection grade as standard

Construction characteristics

Body	Technopolymer
Spacer	Technopolymer
Spacers	NBR
Piston seals	NBR
Springs	AISI 303 stainless steel
Operators	Technopolymer
Pistons	Technopolymer
Spools	AISI 303 stainless steel

Functions

SV 5/2 MONOSTABLE SOLENOID-SPRING
SV 5/2 MONOSTABLE SOLENOID-DIFFERENTIAL
SV 5/2 BISTABLE SOLENOID-SOLENOID
SV 5/3 C.C. SOLENOID-SOLENOID
SV 2x3/2 N.C.-N.C. (=5/3 O.C.) SOLENOID-SOLENOID
SV 2x3/2 N.O.-N.O. (=5/3 P.C.) SOLENOID-SOLENOID
SV 2x3/2 N.C.-N.O. SOLENOID-SOLENOID
SV 2x3/2 N.O.-N.C. SOLENOID-SOLENOID

Technical characteristics

Voltage	24VDC ±10% PNP (NPN and AC on request)
Pilot consumption	0,5 Watt
Pilot working pressure (12-14)	from 2,5 to 7 bar max.
Valve working pressure [1]	from vacuum to 10 bar max.
Operating temperature	from -5°C to +50°C
Protection degree	IP40
Life (standard operating conditions)	50000000
Fluid	Filtered air. No lubrication needed, if applied it shall be continuous

Overall dimensions and technical information are provided solely for informative purposes and may be modified without notice

Solenoid - Spring

Coding: 2241.52.00.39.Ⓥ

Operational characteristics	
Fluid	Filtered air. No lubrication needed, if applied it shall be continuous
Working pressure (bar)	From vacuum to 10
Pressure range (bar)	2,5 ÷ 7
Temperature °C	-5 ÷ +50
Flow rate at 6 bar with Δp=1 (Nl/min)	550
Responce time according to ISO 12238, activation time (ms)	12
Responce time according to ISO 12238, deactivation time (ms)	20

Shifting time of pneumatic directional control valves or moving parts, logic devices were measured in accordance to ISO 12238:2001

Ⓥ	VOLTAGE
	02 = 24 VDC PNP

SHORT FUNCTION CODE "A"
Weight 67 g

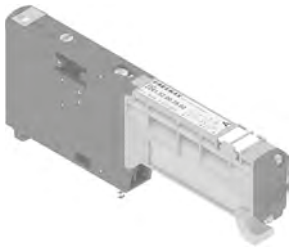

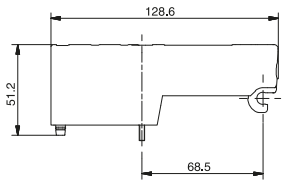

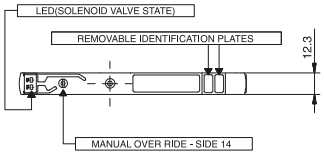

Flow rate at 6 bar with Δp=1 (Nl/min) with Base cod. 2248.01Ⓥ tube Ø8= 550

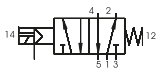

Solenoid-Differential

Coding: 2241.52.00.36.Ⓥ

Operational characteristics	
Fluid	Filtered air. No lubrication needed, if applied it shall be continuous
Working pressure (bar)	From vacuum to 10
Pressure range (bar)	2,5 ÷ 7
Temperature °C	-5 ÷ +50
Flow rate at 6 bar with Δp=1 (Nl/min)	550
Responce time according to ISO 12238, activation time (ms)	20
Responce time according to ISO 12238, deactivation time (ms)	25

Shifting time of pneumatic directional control valves or moving parts, logic devices were measured in accordance to ISO 12238:2001

Ⓥ	VOLTAGE
	02 = 24 VDC PNP

SHORT FUNCTION CODE "B"
Weight 67 g

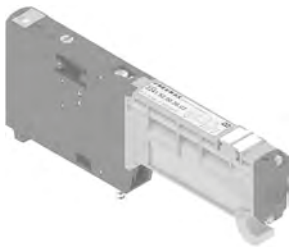

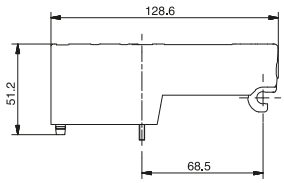

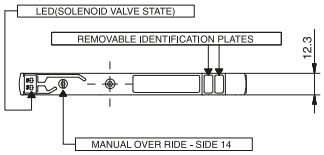

Flow rate at 6 bar with Δp=1 (Nl/min) with Base cod. 2248.01Ⓥ tube Ø8= 550

Solenoid-Solenoid

Coding: 2241.52.00.35.Ⓥ

Operational characteristics	
Fluid	Filtered air. No lubrication needed, if applied it shall be continuous
Working pressure (bar)	From vacuum to 10
Pressure range (bar)	2,5 ÷ 7
Temperature °C	-5 ÷ +50
Flow rate at 6 bar with Δp=1 (Nl/min)	550
Responce time according to ISO 12238, activation time (ms)	10
Responce time according to ISO 12238, deactivation time (ms)	10

Shifting time of pneumatic directional control valves or moving parts, logic devices were measured in accordance to ISO 12238:2001

Ⓥ	VOLTAGE
	02 = 24 VDC PNP

SHORT FUNCTION CODE "C"
Weight 67 g

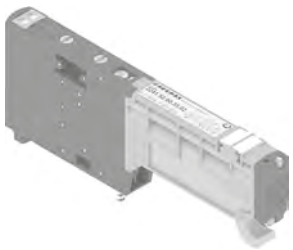

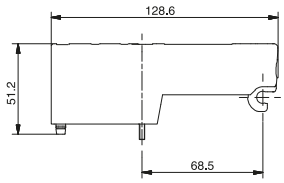

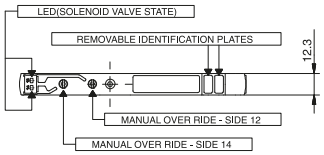

Flow rate at 6 bar with Δp=1 (Nl/min) with Base cod. 2248.01Ⓥ tube Ø8= 550

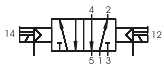

Solenoid-Solenoid 5/3 (Closed centres)

Coding: 2241.53.31.35.Ⓥ

Operational characteristics	
Fluid	Filtered air. No lubrication needed, if applied it shall be continuous
Working pressure (bar)	From vacuum to 10
Pressure range (bar)	2,5 ÷ 7
Temperature °C	-5 ÷ +50
Flow rate at 6 bar with Δp=1 (Nl/min)	400
Responce time according to ISO 12238, activation time (ms)	15
Responce time according to ISO 12238, deactivation time (ms)	20

Shifting time of pneumatic directional control valves or moving parts, logic devices were measured in accordance to ISO 12238:2001

Ⓥ	VOLTAGE
	02 = 24 VDC PNP

SHORT FUNCTION CODE "E"
Weight 83 g

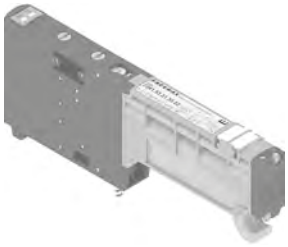

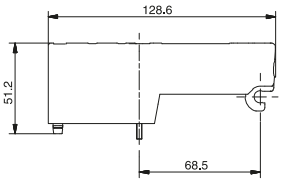

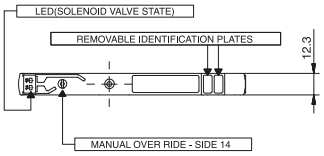

Flow rate at 6 bar with Δp=1 (Nl/min) with Base cod. 2248.01.Ⓥ tube Ø8= 400

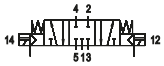

Solenoid-Solenoid 2x3/2

Coding: 2241.62.Ⓕ.35.Ⓥ

Operational characteristics	
Fluid	Filtered air. No lubrication needed, if applied it shall be continuous
Working pressure (bar)	From vacuum to 10
Pressure range (bar)	≥3+(0,2xInlet pressure)
Temperature °C	-5 ÷ +50
Flow rate at 6 bar with Δp=1 (Nl/min)	420
Responce time according to ISO 12238, activation time (ms)	15
Responce time according to ISO 12238, deactivation time (ms)	25

Shifting time of pneumatic directional control valves or moving parts, logic devices were measured in accordance to ISO 12238:2001

Ⓕ	FUNCTION
	44 = NC-NC (5/3 Open centres)
	45 = NC-NO (normally closed-normally open)
	54 = NO-NC (normally open-normally closed)
	55 = NO-NO (5/3 Pressured centres)
Ⓥ	VOLTAGE
	02 = 24 VDC PNP

SHORT FUNCTION CODE:
NC-NC (5/3 Open centres)="F"
NO-NO (5/3 Pressured centres)="G"
NC-NO="H"
NO-NC="I"
Weight 75 g

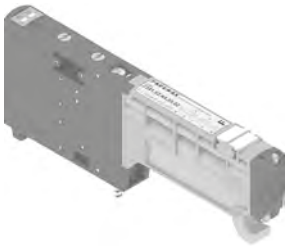

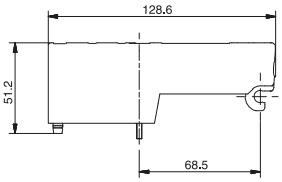

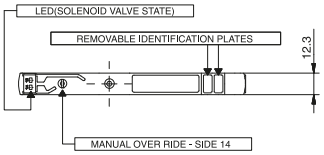

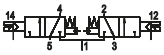

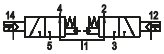

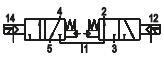

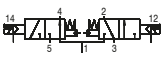

Flow rate at 6 bar with Δp=1 (Nl/min) with Base cod. 2244.01Ⓥ tube Ø4= 140
Flow rate at 6 bar with Δp=1 (Nl/min) with Base cod. 2246.01Ⓥ tube Ø6= 360
Flow rate at 6 bar with Δp=1 (Nl/min) with Base cod. 2248.01Ⓥ tube Ø8= 420

Overall dimensions and technical information are provided solely for informative purposes and may be modified without notice

Bases only kit

Coding: CMP(V)(C)P0

(V)	VERSION
	9E = 9 poles kit
	1E = 15 poles kit
(C)	TUBE DIAMETER
	44 = Ø4-4 (9 poles)
	66 = Ø6-6 (9 poles)
	88 = Ø8-8 (9 poles)
	444 = Ø4-4-4 (15 poles)
	666 = Ø6-6-6 (15 poles)
	888 = Ø8-8-8 (15 poles)

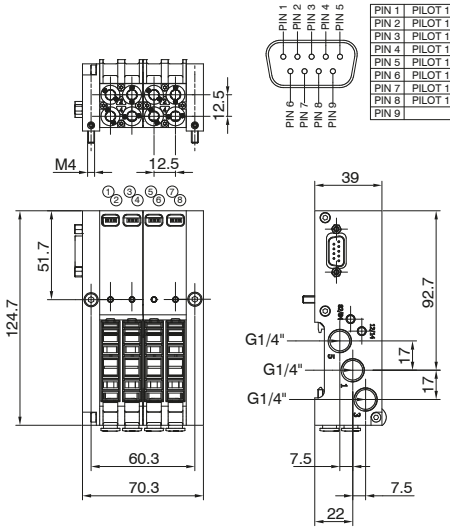

PIN 1	PILOT 14 S.V. POS. 1
PIN 2	PILOT 12 S.V. POS. 1
PIN 3	PILOT 14 S.V. POS. 2
PIN 4	PILOT 12 S.V. POS. 2
PIN 5	PILOT 14 S.V. POS. 3
PIN 6	PILOT 12 S.V. POS. 3
PIN 7	PILOT 14 S.V. POS. 4
PIN 8	PILOT 12 S.V. POS. 4
PIN 9	GND

CMP9E(C)P0

Weight 400 g

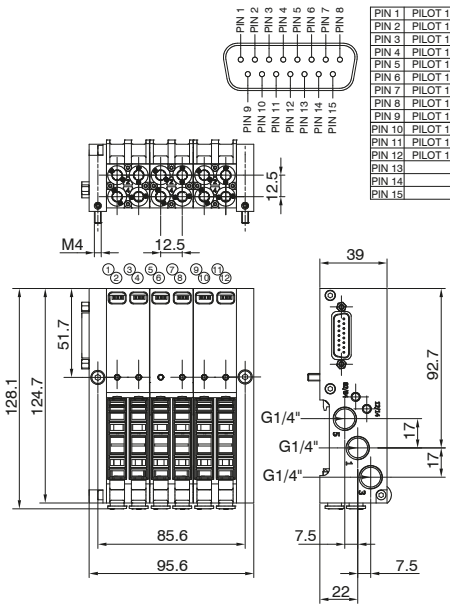

PIN 1	PILOT 14 S.V. POS. 1
PIN 2	PILOT 12 S.V. POS. 1
PIN 3	PILOT 14 S.V. POS. 2
PIN 4	PILOT 12 S.V. POS. 2
PIN 5	PILOT 14 S.V. POS. 3
PIN 6	PILOT 12 S.V. POS. 3
PIN 7	PILOT 14 S.V. POS. 4
PIN 8	PILOT 12 S.V. POS. 4
PIN 9	PILOT 14 S.V. POS. 5
PIN 10	PILOT 12 S.V. POS. 5
PIN 11	PILOT 14 S.V. POS. 6
PIN 12	PILOT 12 S.V. POS. 6
PIN 13	GND
PIN 14	GND
PIN 15	GND

CMP1E(C)P0

Weight 500 g

Available bases

Tube Ø4

Tube Ø6

Tube Ø8

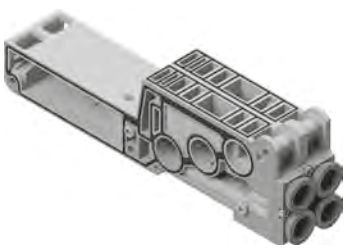

Closing plate

Coding: 2240.00

Operational characteristics	
Fluid	Filtered air. No lubrication needed, if applied it shall be continuous
Working pressure (bar)	From vacuum to 10
Temperature °C	-5 ÷ +50

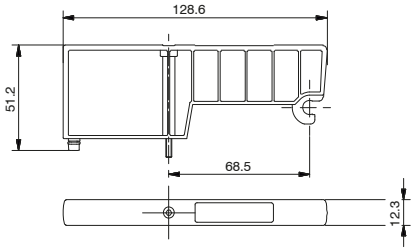

Weight 30 g
SHORT FUNCTION CODE "T"

Cable complete with connector, 9 Poles, IP40

Coding: 2400.09.Ⓛ.00

	CABLE LENGTH
Ⓛ	**03** = 3 meters
	05 = 5 meters
	10 = 10 meters

Cable complete with connector, 15 Poles, IP40

Coding: 2400.15.Ⓛ.00

	CABLE LENGTH
Ⓛ	**03** = 3 meters
	05 = 5 meters
	10 = 10 meters

Overall dimensions and technical information are provided solely for informative purposes and may be modified without notice

Manifold layout configuration

MULTIPOINT CONNECTION

MP9 = 9 poles
MP1 = 15 poles

LEFT ENDPLATE

E= External feeding

RIGHT ENDPLATE

P0= Closed

C	MP9	-	E	-	. . .	-	. . .	-	P0

C	MP1	-	E	-	. . .	-	. . .	-	. . .	-	P0

MODUL CONFIGURATION

Sub-base type

SUB-BASE AND VALVE CONFIGURATION

Sub-base type

Valve type

SUB-BASE TYPE

4 = 2 Position Bistable sub base Ø4
6 = 2 Position Bistable sub base Ø6
8 = 2 Position Bistable sub base Ø8

SUB-BASE TYPE

4 = 2 Position Bistable sub base Ø4
6 = 2 Position Bistable sub base Ø6
8 = 2 Position Bistable sub base Ø8

VALVE TYPE

A = SV 5/2 Solenoid-Spring
B = SV 5/2 Solenoid-Differential
C = SV 5/2 Solenoid-Solenoid
E = SV 5/3 C.C. Solenoid-Solenoid

F = SV 2x3/2 N.C.-N.C. (=5/3 O.C.) Solenoid-Solenoid
G= SV 2x3/2 N.O.-N.O. (=5/3 P.C.) Solenoid-Solenoid
H= SV 2x3/2 N.C.-N.O. Solenoid-Solenoid
I = SV 2x3/2 N.O.-N.C. Solenoid-Solenoid

T = Free valve space plug

Series 2200 OPTYMA-Sc solenoid valve manifolds managed by multipoint connection are "well tried components"

	Well-tried component	- The product is well-tried product for a safety-related application according to ISO 13849-1. - The relevant basic and well-tried safety principles according ISO 13849-2 for this product are fullfilled. - The suitability of the product for a precise application must be verified and confirmed by the user.
B_{10d}	50.000.000	

Example shown : CMP9E68P0
Manifold with external supply, 9 poles multipolar, base Ø6, base Ø8

To be completed with solenoid valves before use

Example shown : CMP1E666P0
Manifold with external supply, 15 poles multipolar , base Ø6, base Ø6, base Ø6

To be completed with solenoid valves before use

Example shown : CMP1E6CA6CC6FFP0
Manifold with external supply, 15 poles multipolar, base Ø6 with solenoid valves, base Ø6 with solenoid valves, base Ø6 with solenoid valves

Two signals per position, indipendently of the mounted solenoid valve

Example shown : CMP9E6TF6ACP0
Manifold with external supply, 9 poles multipolar, base Ø6 with solenoid valves, base Ø6 with solenoid valves

Two signals per position, indipendently of the mounted solenoid valve

Supply ports and maximum possible size according to valves used

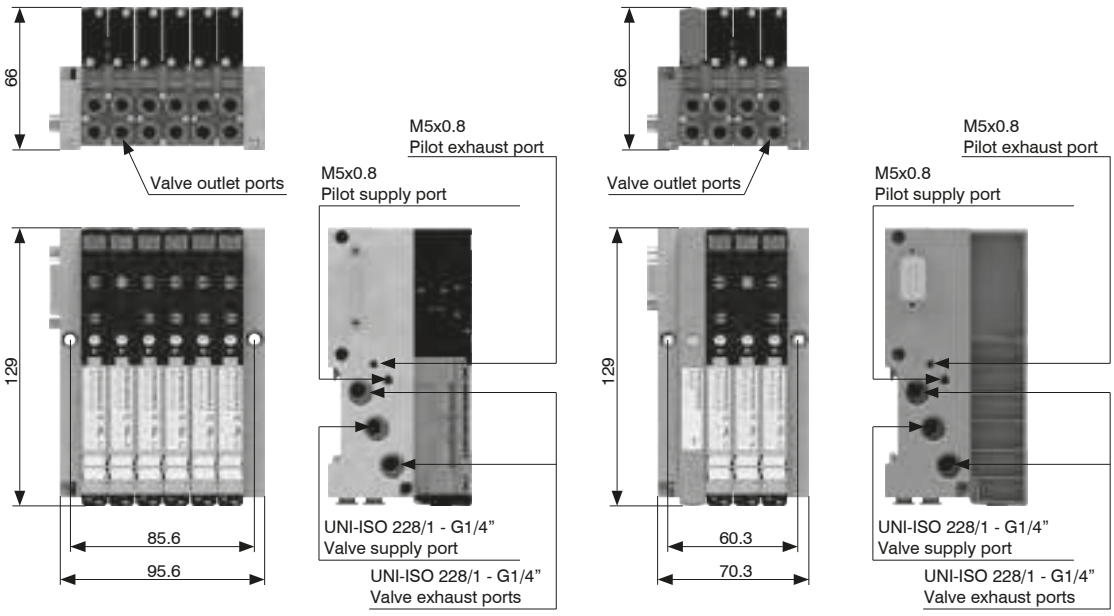

Overall dimensions and technical information are provided solely for informative purposes and may be modified without notice

Series 2500 "OPTYMA-F"

General

The solenoid valves base mounted line including electrical connection into the manifold.
Many technical features make the new product interesting:

- Flow rate of 1000 Nl/min
- Low consumption coils placed all in one side of the valve
- Quick mounting of the valve to the base using just one screw
- Quick connection of the bases thanks to 180 degree rotating pins
- Possibility to use different pressures along the manifold (including vacuum)
- IP65 environmental protection
- Electrical connection directly integrated into the base, 32 electrical signals available (can be used to build up a manifold of 32 monostable valves, 16 bistable valves or any combination within that limit).
- The electrical connection is made via 37 pin D-SUB connector.
- It is also available a 25-pole connector that is able to manage a maximum number of 22 electrical signals.

Possibility to integrate with Field Bus modules CANopen®, PROFIBUS DP, DeviceNet, EtherNet/IP, PROFINET IO RT/IRT, EtherCAT®, Powerlink and Modbus/TCP.
Possibility to connect input modules, even on the base that does not have the Field Bus module. Large use of technopolymer material reduces the overall weight of the manifold.

"Shifting time of pneumatic directional control valves or moving parts, logic devices were measured in accordance to ISO 12238:2001, Pneumatic fluid power-Directional control valves-Measurement of shifting time"

Main characteristics

Integrated and optimized electrical connection system.
IP65 protection degree.
Only one 19mm size
Electrical line connections on one side
Monostable and bistable solenoid valves with the same size dimensions.
Easy and fast manifold assembly

Construction characteristics

Body	Technopolymer
Operators	Technopolymer
Spacers	NBR
Spacer	Technopolymer
Spools	Nickel - plated steel / Technopolymer
Springs	AISI 302 stainless steel
Pistons	Technopolymer
Piston seals	NBR

Functions

SV 5/2 MONOSTABLE SOLENOID-SPRING
SV 5/2 MONOSTABLE SOLENOID-DIFFERENTIAL
SV 5/2 BISTABLE SOLENOID-SOLENOID
SV 5/3 C.C. SOLENOID-SOLENOID
SV 2x3/2 N.C.-N.C. (=5/3 O.C.) SOLENOID-SOLENOID
SV 2x3/2 N.O.-N.O. (=5/3 P.C.) SOLENOID-SOLENOID
SV 2x3/2 N.C.-N.O. SOLENOID-SOLENOID

Technical characteristics

Voltage	24VDC ±10% PNP (NPN and AC on request)
Pilot consumption	1,3 Watt
Pilot working pressure (12-14)	From 3 to 7 bar max.
Valve working pressure [1]	from vacuum up to 10 bar
Operating temperature	-5°C +50°C
Protection degree	IP65
Life (standard operating conditions)	50000000
Fluid	Filtered air. No lubrication needed, if applied it shall be continuous

Solenoid - Spring

Coding: 2531.52.00.39.Ⓥ

Operational characteristics	
Fluid	Filtered air. No lubrication needed, if applied it shall be continuous
Working pressure (bar)	From vacuum to 10
Pressure range (bar)	3 ÷ 7
Temperature °C	-5 ÷ +50
Flow rate at 6 bar with Δp=1 (Nl/min)	1000
Responce time according to ISO 12238, activation time (ms)	14
Responce time according to ISO 12238, deactivation time (ms)	40

Shifting time of pneumatic directional control valves or moving parts, logic devices were measured in accordance to ISO 12238:2001

Ⓥ	VOLTAGE
	02 = 24 VDC PNP
	12 = 24 VDC NPN
	05 = 24 VAC

SHORT FUNCTION CODE "A"
Weight 123 g

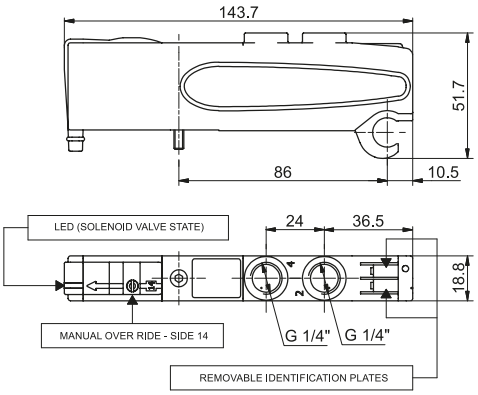

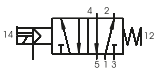

Solenoid-Differential

Coding: 2531.52.00.36.Ⓥ

Operational characteristics	
Fluid	Filtered air. No lubrication needed, if applied it shall be continuous
Working pressure (bar)	From vacuum to 10
Pressure range (bar)	3 ÷ 7
Temperature °C	-5 ÷ +50
Flow rate at 6 bar with Δp=1 (Nl/min)	1000
Responce time according to ISO 12238, activation time (ms)	20
Responce time according to ISO 12238, deactivation time (ms)	29

Shifting time of pneumatic directional control valves or moving parts, logic devices were measured in accordance to ISO 12238:2001

Ⓥ	VOLTAGE
	02 = 24 VDC PNP
	12 = 24 VDC NPN
	05 = 24 VAC

SHORT FUNCTION CODE "B"
Weight 120 g

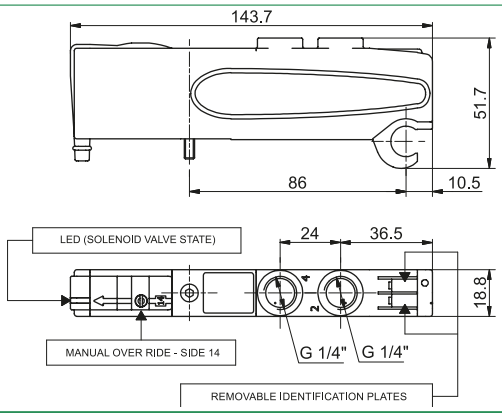

Solenoid-Solenoid

Coding: 2531.52.00.35.Ⓥ

Operational characteristics	
Fluid	Filtered air. No lubrication needed, if applied it shall be continuous
Working pressure (bar)	From vacuum to 10
Pressure range (bar)	3 ÷ 7
Temperature °C	-5 ÷ +50
Flow rate at 6 bar with Δp=1 (Nl/min)	1000
Responce time according to ISO 12238, activation time (ms)	10
Responce time according to ISO 12238, deactivation time (ms)	14

Shifting time of pneumatic directional control valves or moving parts, logic devices were measured in accordance to ISO 12238:2001

Ⓥ	VOLTAGE
	02 = 24 VDC PNP
	12 = 24 VDC NPN
	05 = 24 VAC

SHORT FUNCTION CODE "C"
Weight 128 g

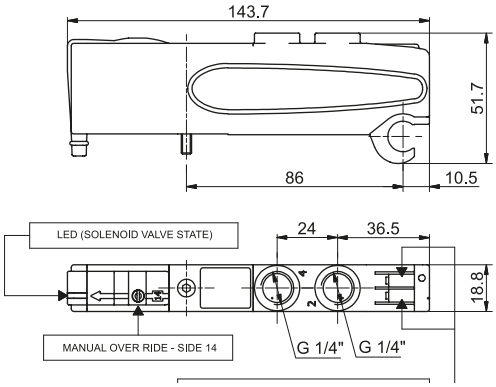

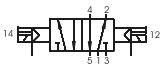

Overall dimensions and technical information are provided solely for informative purposes and may be modified without notice

Solenoid-Solenoid 5/3

Coding: 2531.53.31.35.Ⓥ

Operational characteristics	
Fluid	Filtered air. No lubrication needed, if applied it shall be continuous
Working pressure (bar)	From vacuum to 10
Pressure range (bar)	3 ÷ 7
Temperature °C	-5 ÷ +50
Flow rate at 6 bar with Δp=1 (Nl/min)	600
Responce time according to ISO 12238, activation time (ms)	15
Responce time according to ISO 12238, deactivation time (ms)	20

Shifting time of pneumatic directional control valves or moving parts, logic devices were measured in accordance to ISO 12238:2001

	VOLTAGE
Ⓥ	**02** = 24 VDC PNP
	12 = 24 VDC NPN
	05 = 24 VAC

SHORT FUNCTION CODE "E"
Weight 126 g

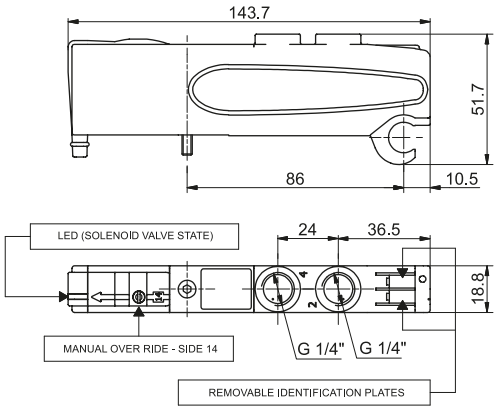

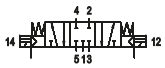

Solenoid-Solenoid 2x3/2

Coding: 2531.62.Ⓕ.35.Ⓥ

Operational characteristics	
Fluid	Filtered air. No lubrication needed, if applied it shall be continuous
Working pressure (bar)	From vacuum to 10
Pressure range (bar)	≥2,5+(0,2xP.alim.)
Temperature °C	-5 ÷ +50
Flow rate at 6 bar with Δp=1 (Nl/min)	700
Responce time according to ISO 12238, activation time (ms)	15
Responce time according to ISO 12238, deactivation time (ms)	25

Shifting time of pneumatic directional control valves or moving parts, logic devices were measured in accordance to ISO 12238:2001

	FUNCTION
Ⓕ	**44** = NC-NC (5/3 Open centres)
	55 = NO-NO (5/3 Pressured centres)
	45 = N.C.-N.O. (normally closed-normally open)
	54 = N.O.-N.C. (normally open-normally closed)
	VOLTAGE
Ⓥ	**02** = 24 VDC PNP
	12 = 24 VDC NPN
	05 = 24 VAC

SHORT FUNCTION CODE:
NC-NC (5/3 Open centres)="F"
NO-NO (5/3 Pressured centres)="G"
NC-NO="H"
NO-NC="I"
Weight 115,5 g

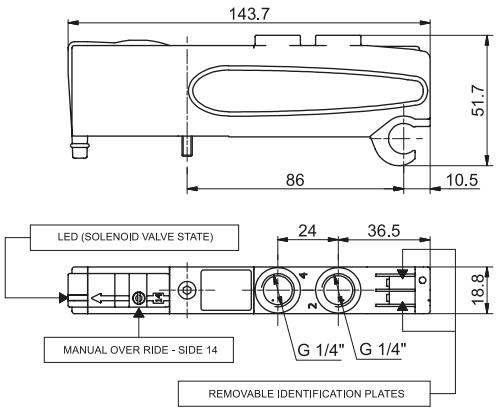

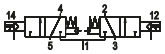

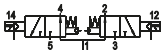

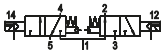

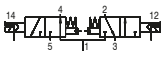

Left Endplates

Coding: 2530.Ⓥ.Ⓒ

Operational characteristics	
Fluid	Filtered air. No lubrication needed, if applied it shall be continuous
Working pressure (bar)	From vacuum to 10 (External pilot base only)
Pressure range (bar)	3 ÷ 7
Temperature °C	-5 ÷ +50

Ⓥ	VERSION	
	02 =	External feeding
	12 =	Self-feeding
Ⓒ	ELECTRICAL CONNECTION	
	37P = PNP	Connectors 37 poles
	25P = PNP	Connectors 25 poles
	37N = NPN	Connectors 37 poles
	25N = NPN	Connectors 25 poles
	37A = AC	Connectors 37 poles
	25A = AC	Connectors 25 poles
	C16 = PNP	Terminal 16 signals

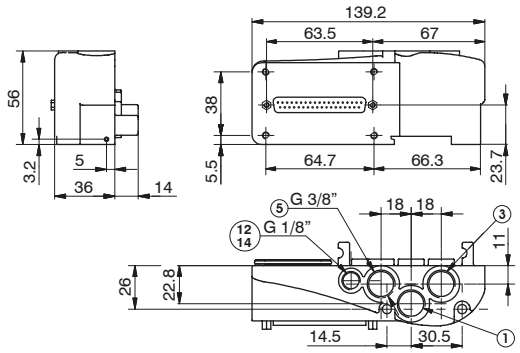

Weight 206 g

2530.02.Ⓒ

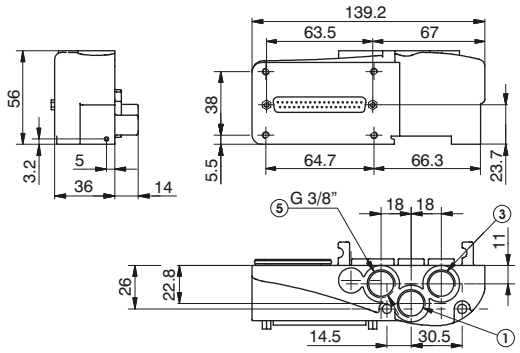

Weight 206 g

2530.12.Ⓒ

Right Endplates

Coding: 2530.03.Ⓒ

Operational characteristics	
Fluid	Filtered air. No lubrication needed, if applied it shall be continuous
Working pressure (bar)	From vacuum to 10
Temperature °C	-5 ÷ +50

Ⓒ	ELECTRICAL CONNECTION	
	00 =	Electrical connection
	25P =	Connectors 25 poles

Weight 181,5 g

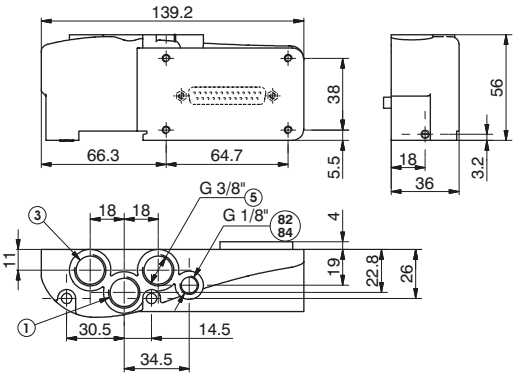

PORT 82/84 = DO NOT PRESSURIZE, SOLENOID PILOTS EXHAUST

Overall dimensions and technical information are provided solely for informative purposes and may be modified without notice

Closing plate

Coding: 2530.00

SHORT FUNCTION CODE "T"
Weight 53,5 g

Operational characteristics	
Fluid	Filtered air. No lubrication needed, if applied it shall be continuous
Working pressure (bar)	From vacuum to 10
Temperature °C	-5 ÷ +50

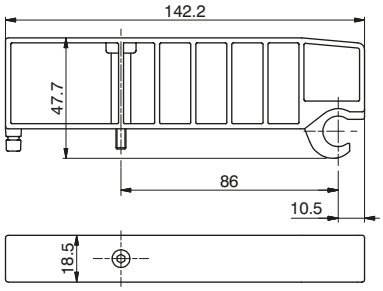

Modular base

Coding: 2530.01Ⓥ

Ⓥ	VERSION
	M = for Monostable SV
	B = for Bistable SV

SHORT CODE "1" (per EV Monostabile)
SHORT CODE "2" (per EV Bistabile)
Weight 91,5 g

Operational characteristics	
Fluid	Filtered air. No lubrication needed, if applied it shall be continuous
Working pressure (bar)	From vacuum to 10
Temperature °C	-5 ÷ +50

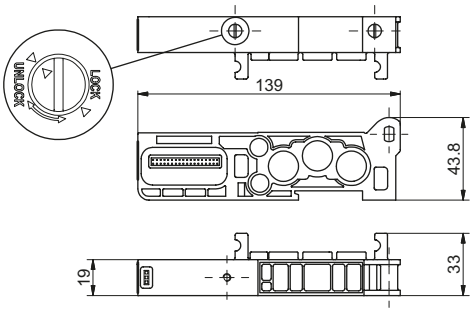

Intermediate Inlet/Exhaust module

Coding: 2530.10

SHORT FUNCTION CODE "W"
Weight 110 g

Operational characteristics	
Fluid	Filtered air. No lubrication needed, if applied it shall be continuous
Working pressure (bar)	From vacuum to 10
Temperature °C	-5 ÷ +50

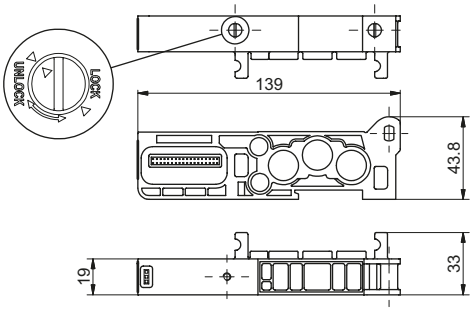

General :

Each Optyma-F manifold lets to manage 32 command signals for the valves.
Optyma-F serial nodes (CANopen®, DeviceNet, PROFIBUS DP, EtherCAT®, PROFINET IO RT, EtherNet/IP and Powerlink) have a single pin for the power supply of the solenoid valves.
So if you want to interrupt the power supply of one valve it is necessary to interrupt all the valves.
The additional power supply module lets to interrupt at the same time the first 2 available command signals for the valves after the module itself. The additional power supply module is particularly useful also when you use control signals that block the valves. This application is effective both with serial management and multi-pole connection of the manifolds.
This module is inserted directly into the Optyma-F solenoid valves manifold.

Ordering code

2530.10.2A

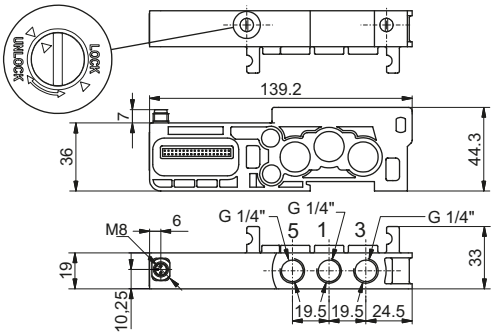

In particular this module is fitted with a M8 3 pins connector:
+24V, not connected, GND.

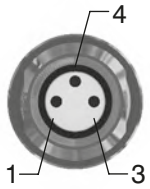

PIN	DESCRIPTION
1	+24 VDC
4	NOT CONNECTED
3	GND

WORKING PRINCIPLE / SIMPLIFIED FUNCTIONAL DIAGRAM

This module uses an external power supply (+24VDC) to manage the solenoid valves.

The output signal from serial node / multi-pole connection is used as command signal: when it is high the +24VDC will be present at the module output.

If you want to cut off the power supply to a group of 2 valves it is sufficient to take away the +24VDC provided to the module by the M8 connector.

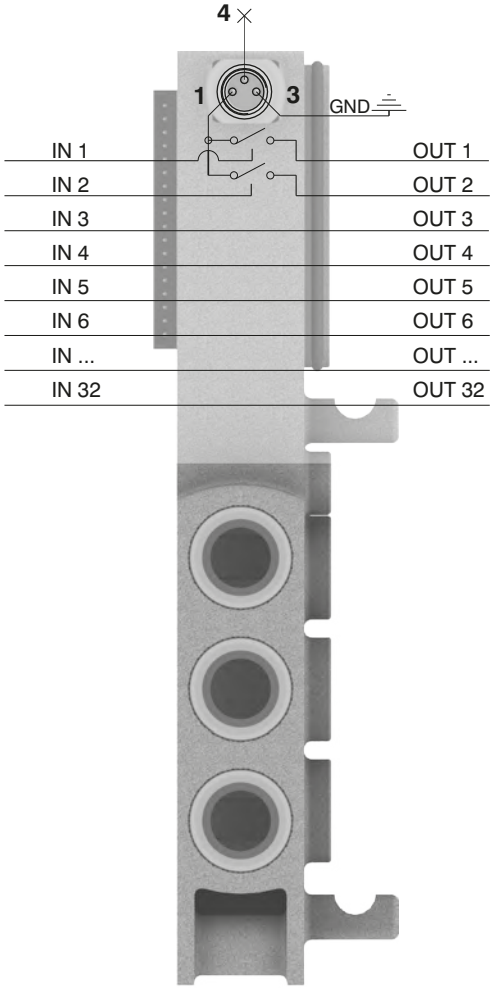

Please note: It is possible to use more modules to interrupt all the command signals, simply by inserting them before the signals to interrupt and after the signals already interrupted.

Overall dimensions and technical information are provided solely for informative purposes and may be modified without notice

Usage examples:

EXAMPLE 1:
Manifold of 12 monostable valves on which you want to interrupt signals 7-8

Assembly:
- 6 monostable valves (not interruptible because before the module),
- 1 additional power supply module,
- 6 monostable valves. Please note: the first 2 monostable of these are interruptible by the module, while the following 4 will work correctly managed directly by the corresponding command signals.

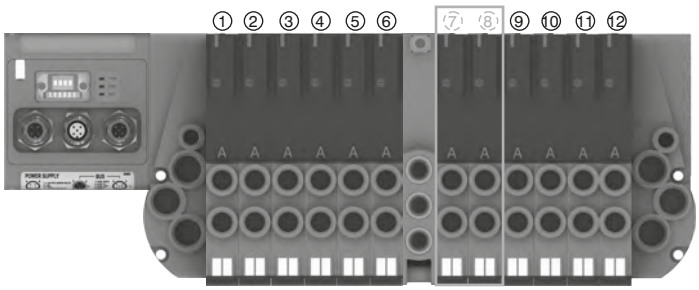

EXAMPLE 2:
Manifold of 12 monostable valves on which you want to interrupt signal 9

Assembly:
- 8 monostable valves (not interruptible because before the module),
- 1 additional power supply module,
- 1 monostable valve (interruptible),
- 1 closing plate mounted on a monostable base,
- 3 monostable valves (work correctly managed directly by the corresponding command signals).

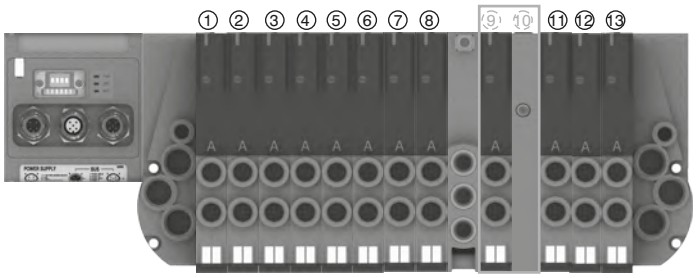

Please note: Each additional power supply module interrupts always 2 electrical signals.
If you need to interrupt less than 2 signals you can:
- assemble the valves to interrupt in the last positions of the manifold, so you don't need to worry about the interrupted exceeding signals;
- use a bistable base and mount a monostable valve (for each signal less than the 2 standard);
- use a monostable base and mount a closing plate (for each signal less than the 2 standard).

EXAMPLE 3:
Manifold of 7 monostable e 3 bistable valves on which you want to interrupt signals 2-3 and 8-9.

Assembly:
- 1 monostable valve (not interruptible because before the module),
- 1 additional power supply module,
- 6 monostable valves.
Please note: the first 2 monostable of these are interruptible by the module, while the following 4 will work correctly managed directly by the corresponding command signals.
- 1 additional power supply module,
- 3 bistable valves.
Please note: the first bistable of these valves is interruptible by the module, while the following 2 will work correctly managed directly by the corresponding command signals.

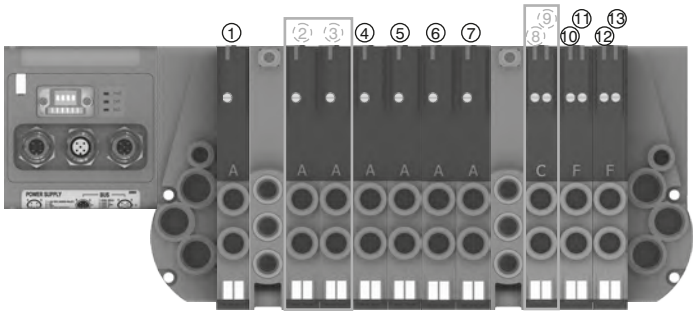

General :

Each Optyma-F manifold lets to manage 32 command signals for the valves.
Optyma-F serial nodes (CANopen®, DeviceNet, PROFIBUS DP, EtherCAT®, PROFINET IO RT, EtherNet/IP and Powerlink) have a single pin for the power supply of the solenoid valves.
So if you want to interrupt the power supply of one valve it is necessary to interrupt all the valves.
The additional power supply module lets to interrupt at the same time the first 4 available command signals for the valves after the module itself. The additional power supply module is particularly useful also when you use control signals that block the valves. This application is effective both with serial management and multi-pole connection of the manifolds.
This module is inserted directly into the Optyma-F solenoid valves manifold.

Ordering code

2530.10.4A

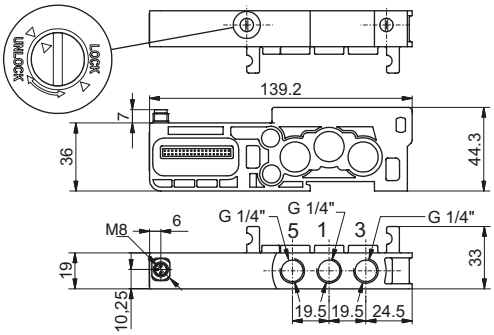

In particular this module is fitted with a M8 3 pins connector:
+24V, not connected, GND.

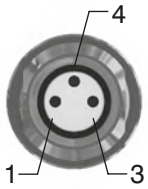

PIN	DESCRIPTION
1	+24 VDC
4	NOT CONNECTED
3	GND

WORKING PRINCIPLE / SIMPLIFIED FUNCTIONAL DIAGRAM

This module uses an external power supply (+24VDC) to manage the solenoid valves.

The output signal from serial node / multi-pole connection is used as command signal: when it is high the +24VDC will be present at the module output.

If you want to cut off the power supply to a group of 4 valves it is sufficient to take away the +24VDC provided to the module by the M8 connector.

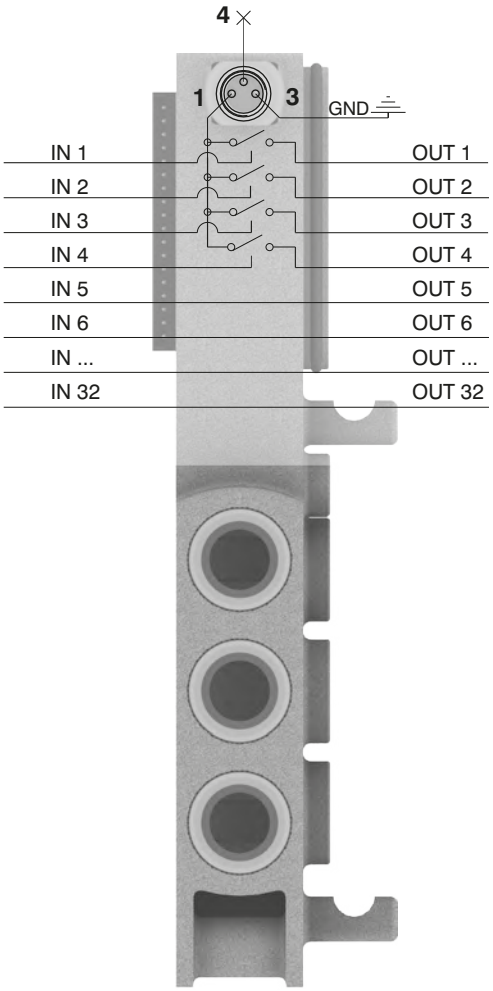

Please note: It is possible to use more modules to interrupt all the command signals, simply by inserting them before the signals to interrupt and after the signals already interrupted.

Overall dimensions and technical information are provided solely for informative purposes and may be modified without notice

Usage examples:

EXAMPLE 1:
Manifold of 12 monostable valves on which you want to interrupt signals 7-8-9-10

Assembly:
- 6 monostable valves (not interruptible because before the module),
- 1 additional power supply module,
- 6 monostable valves. Please note: the first 4 monostable of these are interruptible by the module, while the following 2 will work correctly managed directly by the corresponding command signals.

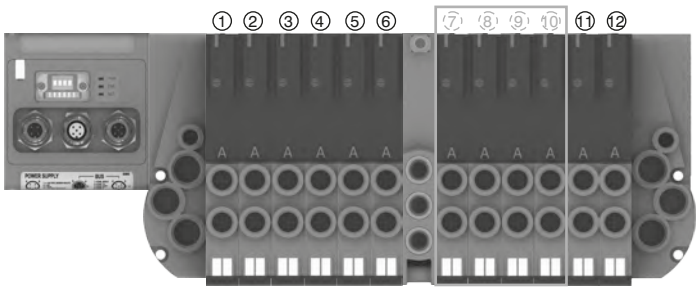

EXAMPLE 2:
Manifold of 12 monostable valves on which you want to interrupt signals 7-8-9

Assembly:
- 6 monostable valves (not interruptible because before the module),
- 1 additional power supply module,
- 3 monostable valves (interruptible),
- 1 closing plate mounted on a monostable base,
- 3 monostable valves (work correctly managed directly by the corresponding command signals).

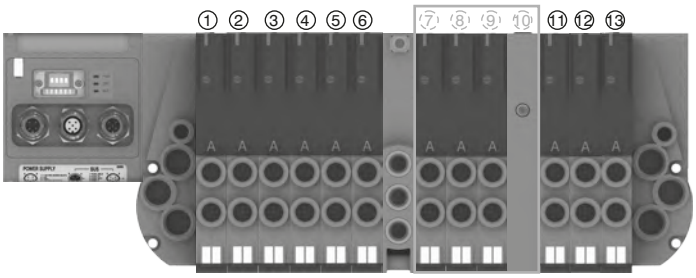

Please note: Each additional power supply module interrupts always 4 electrical signals.
If you need to interrupt less than 4 signals you can:
- assemble the valves to interrupt in the last positions of the manifold, so you don't need to worry about the interrupted exceeding signals;
- use a bistable base and mount a monostable valve (for each signal less than the 4 standard);
- use a monostable base and mount a closing plate (for each signal less than the 4 standard).

EXAMPLE 3:
Manifold of 7 monostable e 3 bistable valves on which you want to interrupt signals 2-3-4-5 and 8-9-10-11.

Assembly:
- 1 monostable valve (not interruptible because before the module),
- 1 additional power supply module,
- 6 monostable valves.
Please note: the first 4 monostable of these are interruptible by the module, while the following 2 will work correctly managed directly by the corresponding command signals.
- 1 additional power supply module,
- 3 bistable valves.
Please note: the first 2 bistable of these valves are interruptible by the module, while the following will work correctly managed directly by the corresponding command signals.

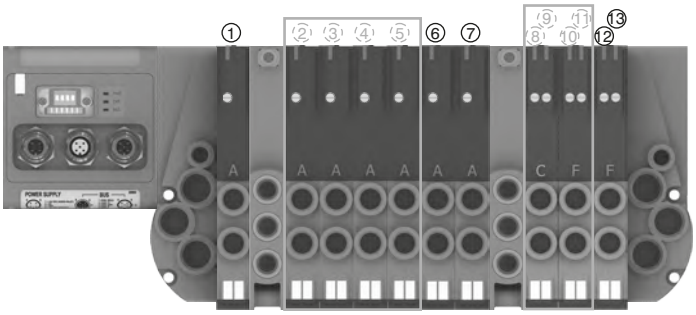

Polyethylene Silencer Series SPL-P

Coding: SPLP.Ⓓ

Ⓓ	TUBE DIAMETER
	18 = 1/8"
	14 = 1/4"
	38 = 3/8"

Diaphragm plug

Coding: 2530.17

Cable complete with connector, 25 Poles IP65

Coding: 2300.25.Ⓛ.Ⓒ

Ⓛ	CABLE LENGTH
	03 = 3 meters
	05 = 5 meters
	10 = 10 meters
Ⓕ	FUNCTION
	31 = Closed centres
	32 = Open centres
	33 = Pressured centres

Cable complete with connector, 37 Poles IP65

Coding: 2400.37.Ⓛ.Ⓒ

Ⓛ	CABLE LENGTH
	03 = 3 meters
	05 = 5 meters
	10 = 10 meters
Ⓕ	FUNCTION
	31 = Closed centres
	32 = Open centres
	33 = Pressured centres

Cable complete with connector, 25 Poles IP65

Coding: 2400.25.Ⓛ.25

Ⓛ	CABLE LENGTH
	03 = 3 meters
	05 = 5 meters
	10 = 10 meters

Overall dimensions and technical information are provided solely for informative purposes and may be modified without notice

The electrical connection is achieved by a 37 pin connector and can manage up to 32 solenoid pilots.
It is also possible use a 25 sub-D pin connector and, in this case, it is possible to manage a maximum of 22 outputs. It is also available a terminal, able to manage a maximum of 16 outputs.
The management and distribution of the electrical signals between each valve is obtained thanks to an electrical connector which receives the signals from the previous module, uses one, two or none depending on the type, and carries forward to the next module the remaining.
Bistable valves, 5/3 and 2x3/2 valves which have two solenoid pilots built in, use two signals; the first is directed to the pilot side 14 the second to the pilot side 12. Modular bases can be fitted with two type of electrical connector: the monostable version uses only one signal (connected to the pilot side 14) and carries forward the remaining, the bistable version which always uses two signals.
This solution allows the modification of the manifold (replacement of monostable valves without bistable for example) without having to reset the PLC output layout.
On other hand this solution limits the maximum number of valves to 16 when it is used a 37 pin connector or 11 when it is used a 25 pin connector. When using a Endplates with terminal, the maximum number of valves are 8.
Intermediate supply/exhaust module uses an electrical connector directly forwarding signals to the next one without any kind of modification.
This allows the use of intermediate modules in any position of the manifold.
All the electrical signals that have not been used on the manifold can be used placing at the end of the manifold the end plate complete with the 25 sub-D female connector.
The number of available signals depends of the connector used to the type of the left end plate and by the total signals used along the manifold:

37 pin connector	nr of output = 32 – (total of used signals)
25 pin connector	nr of output = 22 – (total of used signals)
Terminal	nr of output = 16 – (total of used signals)

Following we show some examples of possible combination and the relative pin assignment.

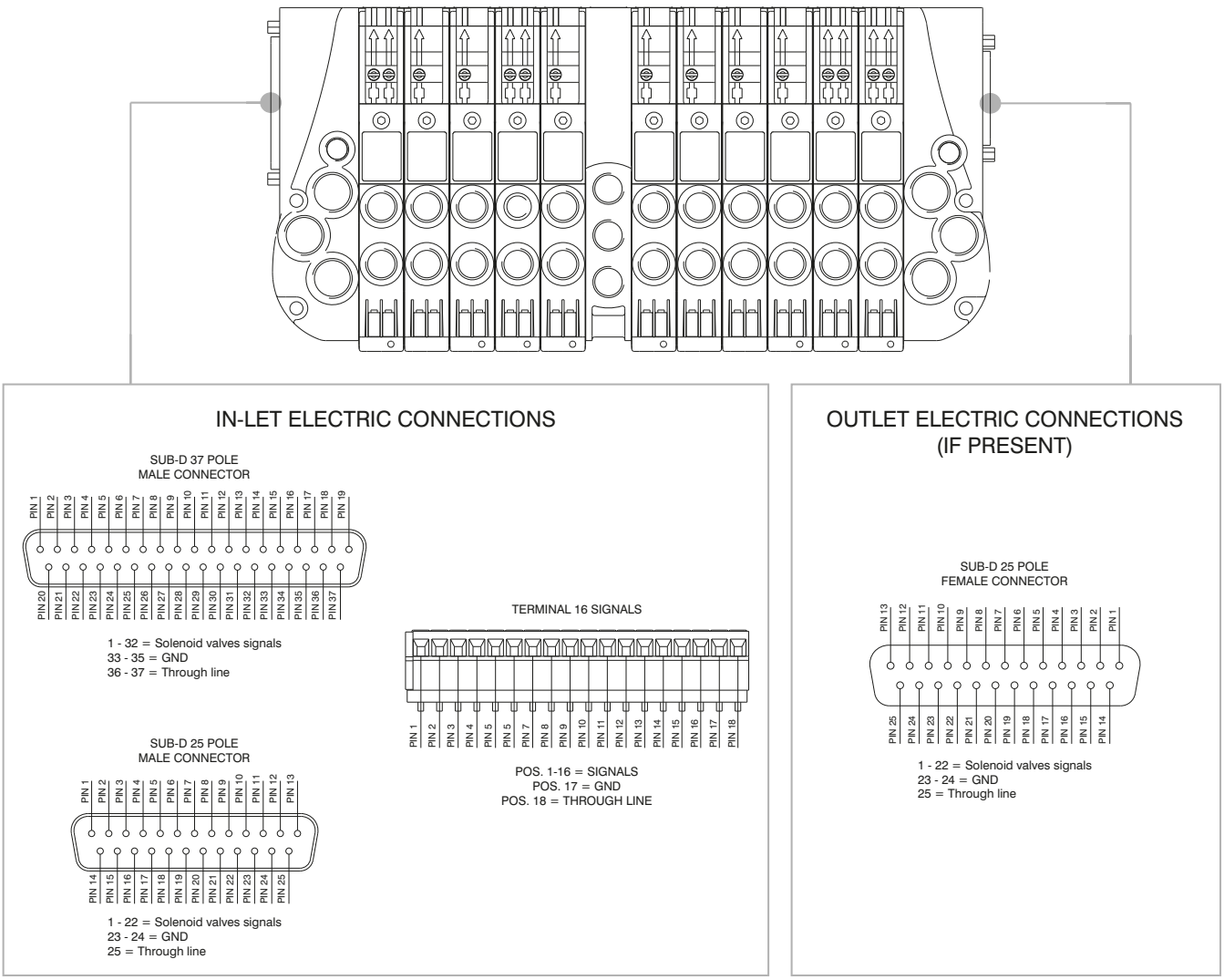

37 PIN Connector correspondence for valves assembled on mixed bases

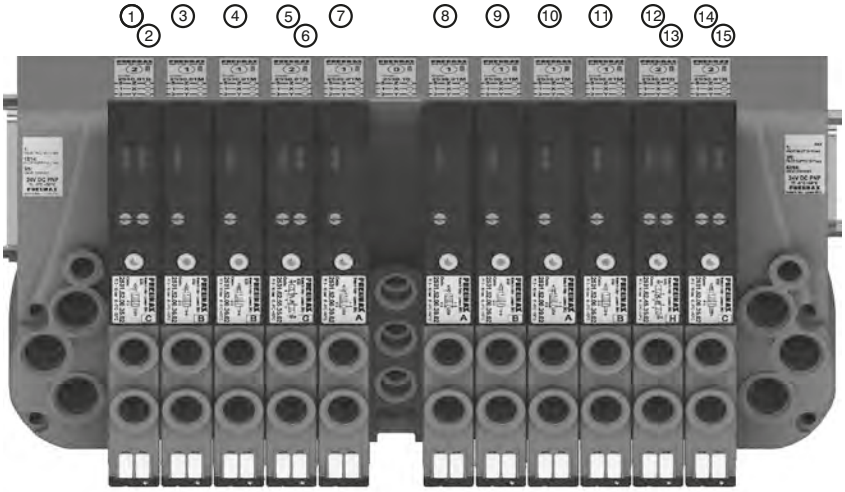

POS.	1	2	3	4	5	6	7	8	9	10	11	12

PIN 1 = PILOT 14 SV POS.1
PIN 2 = PILOT 12 SV POS.1
PIN 3 = PILOT 14 SV POS.2
PIN 4 = PILOT 14 SV POS.3
PIN 5 = PILOT 14 SV POS.4
PIN 6 = PILOT 12 SV POS.4
PIN 7 = PILOT 14 SV POS.5
PIN 8 = PILOT 14 SV POS.7
PIN 9 = PILOT 14 SV POS.8
PIN 10 = PILOT 14 SV POS.9
PIN 11 = PILOT 14 SV POS.10
PIN 12 = PILOT 14 SV POS.11
PIN 13 = PILOT 12 SV POS.11
PIN 14 = PILOT 14 SV POS.12
PIN 15 = PILOT 12 SV POS.12

37 PIN Connector correspondence for manifold mounted on bases for bistable valves

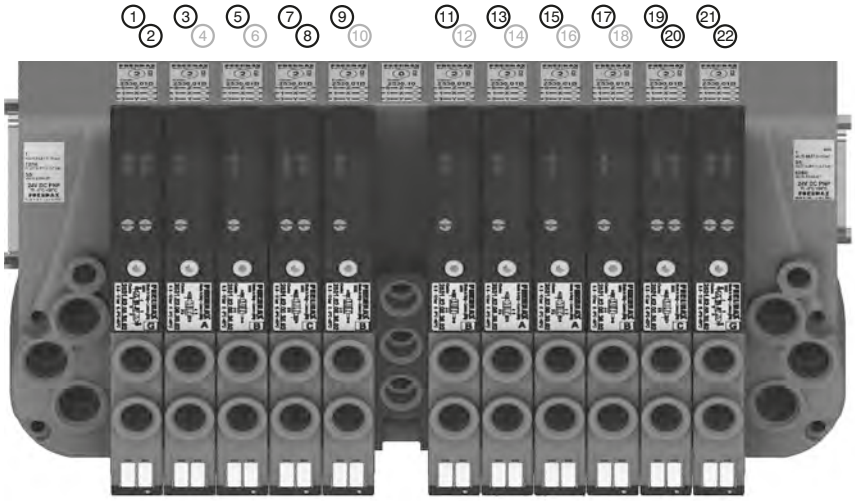

POS.	1	2	3	4	5	6	7	8	9	10	11	12

PIN 1 = PILOT 14 SV POS.1
PIN 2 = PILOT 12 SV POS.1
PIN 3 = PILOT 14 SV POS.2
PIN 4 = NOT CONNECTED
PIN 5 = PILOT 14 SV POS.3
PIN 6 = NOT CONNECTED
PIN 7 = PILOT 14 SV POS.4
PIN 8 = PILOT 12 SV POS.4
PIN 9 = PILOT 14 SV POS.5
PIN 10 = NOT CONNECTED
PIN 11 = PILOT 14 SV POS.7
PIN 12 = NOT CONNECTED
PIN 13 = PILOT 14 SV POS.8
PIN 14 = NOT CONNECTED
PIN 15 = PILOT 14 SV POS.9
PIN 16 = NOT CONNECTED
PIN 17 = PILOT 14 SV POS.10
PIN 18 = NOT CONNECTED
PIN 19 = PILOT 14 SV POS.11
PIN 20 = PILOT 12 SV POS.11
PIN 21 = PILOT 14 SV POS.12
PIN 22 = PILOT 12 SV POS.12

37 PIN Connector correspondence for manifold for 32 position manifold with monostable valves on base

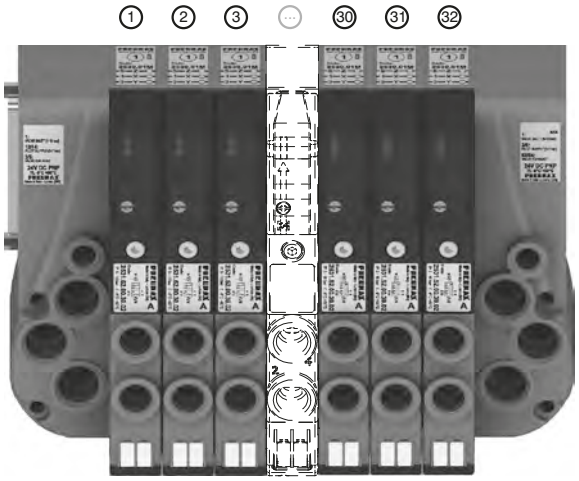

POS.	1	2	3	...	30	31	32

25 PIN Connector correspondence for manifold for 22 position manifold with monostable valves on base

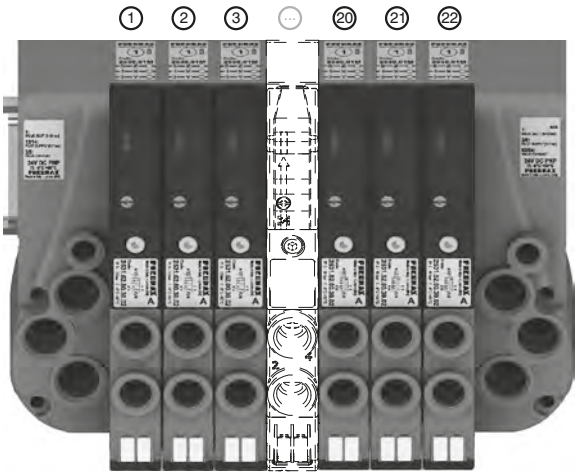

POS.	1	2	3	...	20	21	22

Overall dimensions and technical information are provided solely for informative purposes and may be modified without notice

General :

Using the 2530.03.25P output terminal it is possible to make any electrical signals not used by valves available on a 25 sub-D female connector at the right end of the manifold.
It is possible to then join a multi-core cable to link to the next manifold, or connect directly to one or two I/O modules.
The I/O modules can accept input or output signals, depending upon what is connected.

Please note: If the manifold is connected by a multi-core connection, each connection can be used as either an input or an output, while if the manifold is connected to a serial node the connections can only be used as an output.

It is possible to connect the manifold to up to two I/O modules.

Each I/O module includes 8 diagnostic LEDs which indicate the presence of an Input / Output signal for each connector.

Please note: For an LED to function, a signal of at least +15VDC must be present on pin 4 of the connector. If this signal is lower, the LED will not light, this does not compromise the normal Input / Output function of the unit.

Ordering code

2530.08F

Overall dimensions and I/O layout :

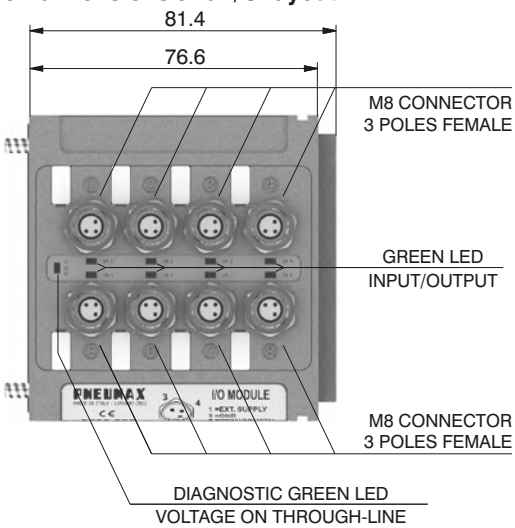

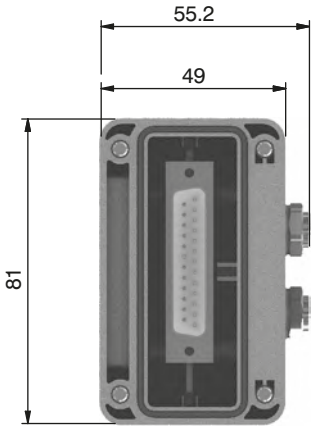

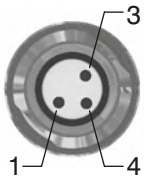

PIN	DESCRIPTION
1	+24 VDC
4	INPUT/OUTPUT
3	GND

Input features:

Each connection can accept either two wire (switches, magnetic switches, pressure switches, etc.) or three wire connections (photocells, electronic end of stroke sensors, etc.) If +24VDC is required on at Pin 1 of each connector, it is possible to provide this via the through-line pin of the multi-pole connector.
I.E :
Pin 25 of the 25 pin multi-pole connector (code 2530.02.25P or 2530.12.25P)
Pin 36-37 of the 37 pin multi-pole connector (code 2530.02.37P or 2530.12.37P)

Output features:

Attention: The output connections are not protected against short-circuit. Please pay attention when wiring (avoid Pin 4 being connected to Pin 3 or Pin 1).

	Model	2530.08F
	Case	Reinforced technopolymer
General characteristics	I/O Connector	M8 connector 3 poles female (IEC 60947-5-2)
	PIN1 voltage (connector used as Input)	By the user
	PIN 4 voltage diagnosis	Green LED
	Node consumption (Outlets excluded)	7mA per each LED with 24 VDC signal
	Outlets voltage	+23,3 VDC (serial) /by the user (multipolar)
	Input voltage	Depend by the using
	Maximum outlet current	100 mA (serial) / 400 mA (multipolar)
	Maximum Input/Output	8 per module
	Multiconnector max. Current	100 mA
	Connections to manifold	Direct connection to 25 poles connector
	Maximum n. of moduls	2
	Protection degree	IP65 when assembled
	Ambient temperature	from -0° to +50° C

CORRESPONDENCE BETWEEN MULTI-POLE SIGNAL AND CONNECTOR

SUB-D TYPE 37 POLE MALE CONNECTOR

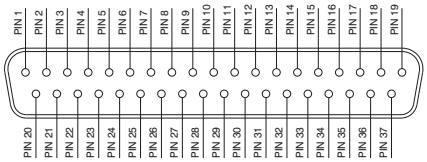

1 - 32 = SIGNALS
33 - 35 = GND
36 - 37 = THROUGH LINE

SUB-D TYPE 25 POLE MALE CONNECTOR

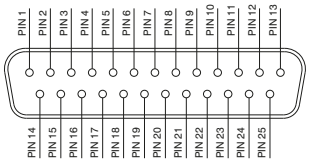

1 - 22 = SIGNALS
23 - 24 = GND
25 = THROUGH LINE

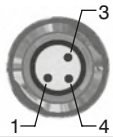

PIN	DESCRIPTION
1	THROUGH LINE
4	SIGNAL
3	GND

Connection modes:

The I/O module changes it is operation depending on the way the manifold is controlled. There are two possible modes:

A) Control via multi-pole connection
B) Control via fieldbus

In order to use the I/O module, the correct right hand endplate with 25 pole female outlet connector must be used.
(Code 2530.03.25P).

A) Control via multi-pole :

M8 connector used as Input:

Attention: Voltage applied to each connector is passed to multi-pole connector pin.

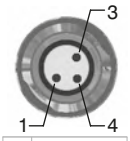

PIN	DESCRIPTION
1	THROUGH LINE
4	SIGNAL
3	GND

M8 connector used as Output:

Output voltage will the same as is applied at the multi-pole connector pin.
The maximum output current depends upon the power unit used, but we recommend no more than 250mA.

Attention: Since every cable has a degree of resistance, there will always be a voltage drop depending on the cable's length, sectional area and the current.

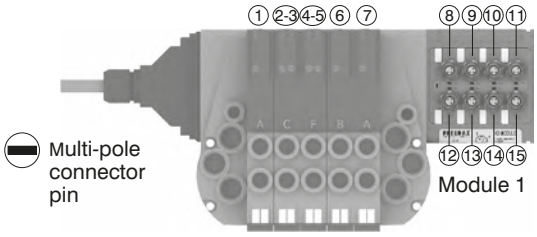

Attention:
Only one more I/O module can be added.

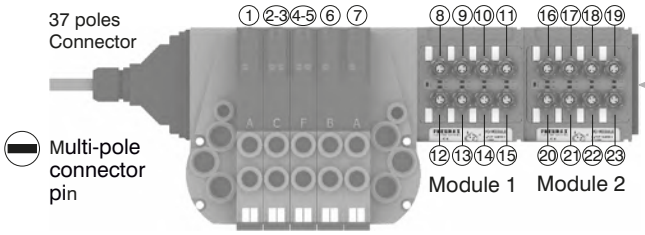

Attention:
No more additions are possible

Attention : Optyma 32-F solenoid valve manifolds permit up to 22 electrical signals that are not used by manifolds to be made available: these signals can be managed by another manifold and / or by I/O modules.
The I/O module will manage these unused signals. Connections that are not managing useful signals will remain unconnected.

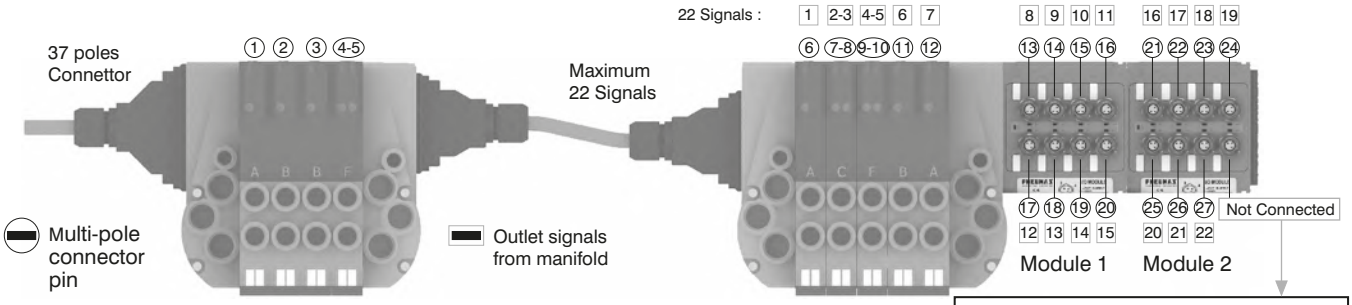

Please note: this example considers a 37 pin multi-pole connector.
The same configuration managed by a 25 pin multi-pole connector will stop at number 22 of multi-pole connector and at number 17 of the manifold. 22 17

Attention:
Signal Not connected
GND Connected
Through line Connected

Overall dimensions and technical information are provided solely for informative purposes and may be modified without notice

Please note: Optyma 32-F solenoid valve manifolds manage up to 32 signals. If the manifold uses more than 24 signals the I/O module will manage only the remainder. Connections that are not managing useful signals will remain unconnected.

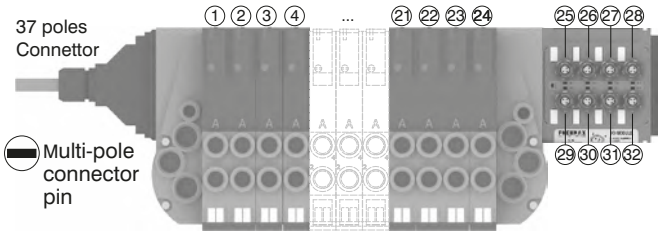

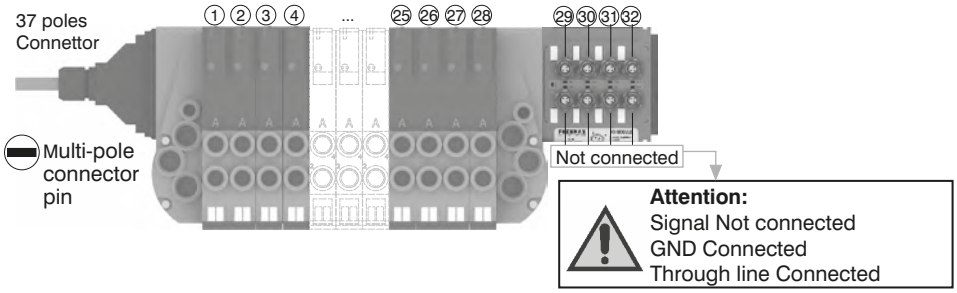

B) Control via fieldbus:

With this kind of control the I/O module can only be used as an output. Pin 1 of each connector is not connected. The output voltage will be 0.7V lower than that applied to Pin 4 of the connector.
The maximum output current for each output is 100mA. Te correspondence between control byte and each single output depends on how many electrical signals are used by the manifold and by the relative position of the I/O module.

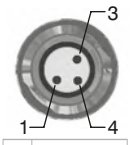

PIN	DESCRIPTION
1	NOT CONNECTED
4	SIGNAL
3	GND

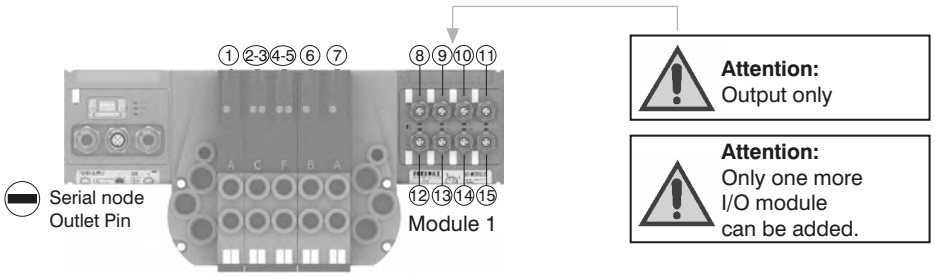

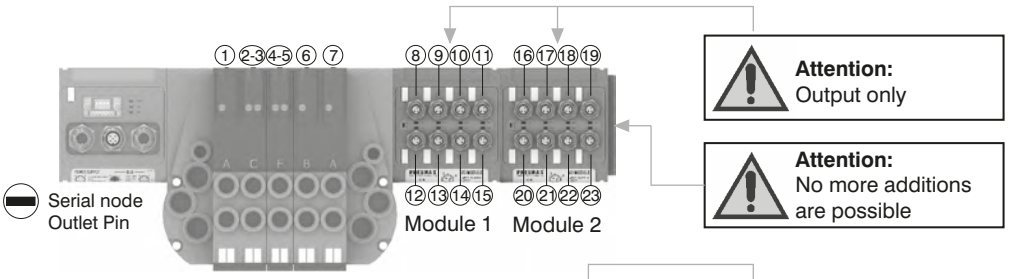

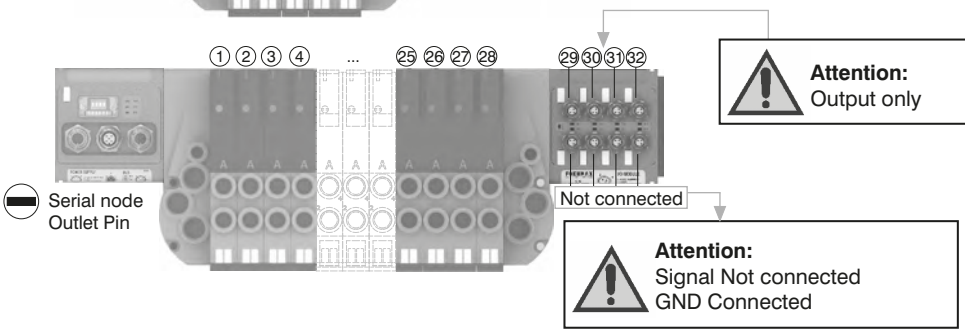

Please note: I/O modules don't allow to connect any additional valves manifold after them.

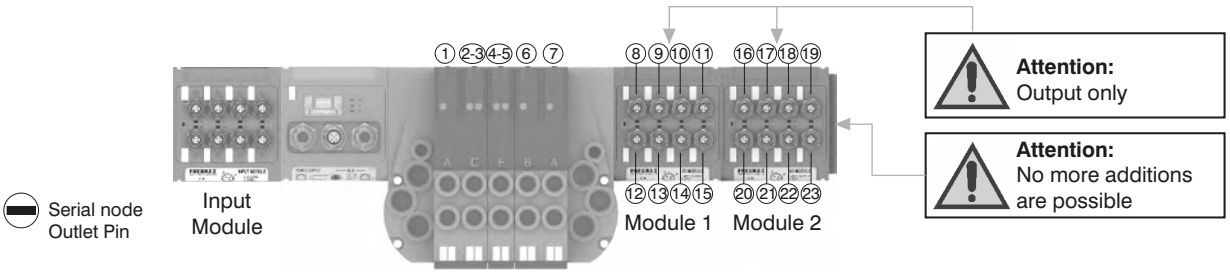

From the top

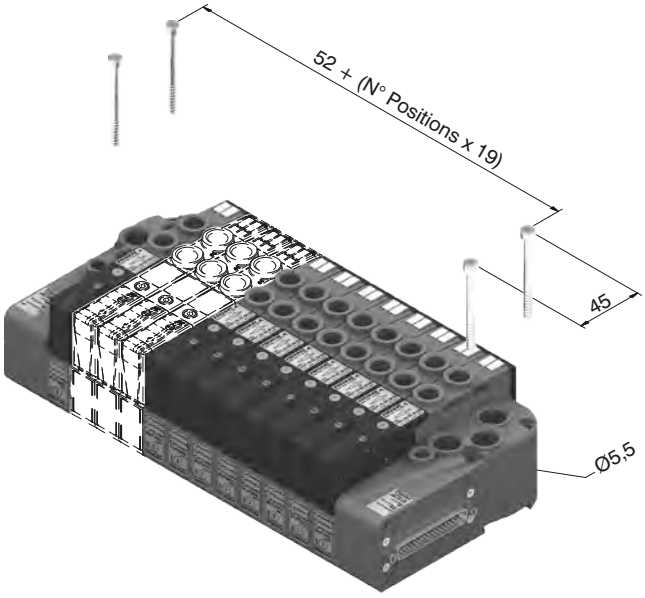

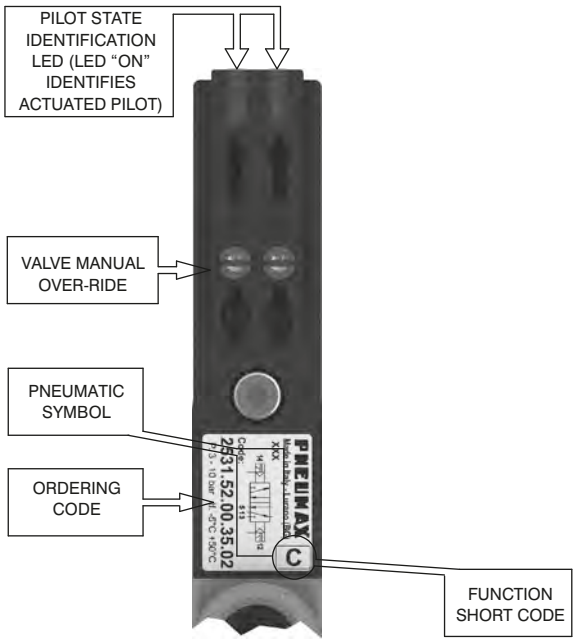

DIN rail fixing

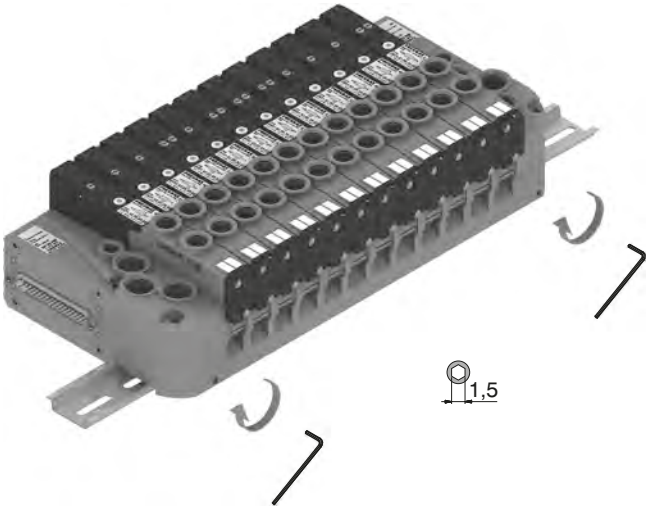

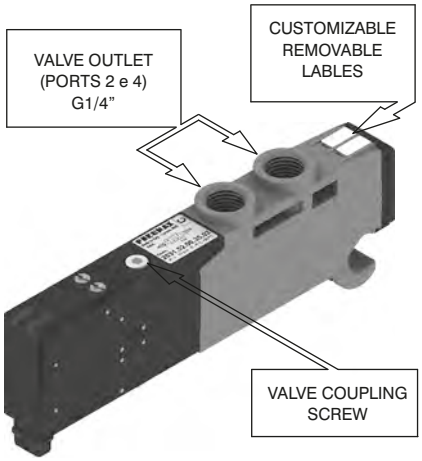

Maximum possible size according to valves seats

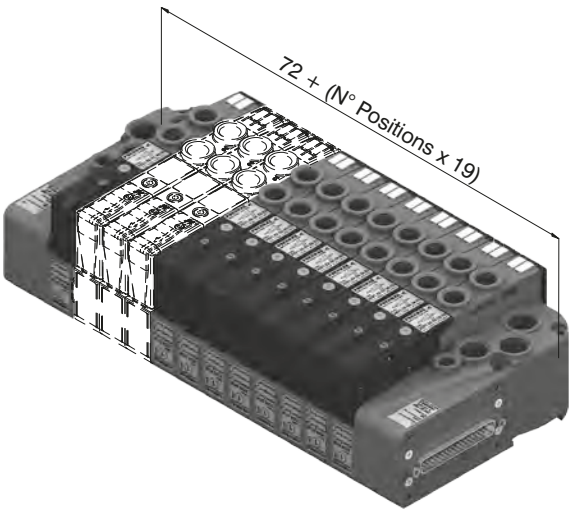

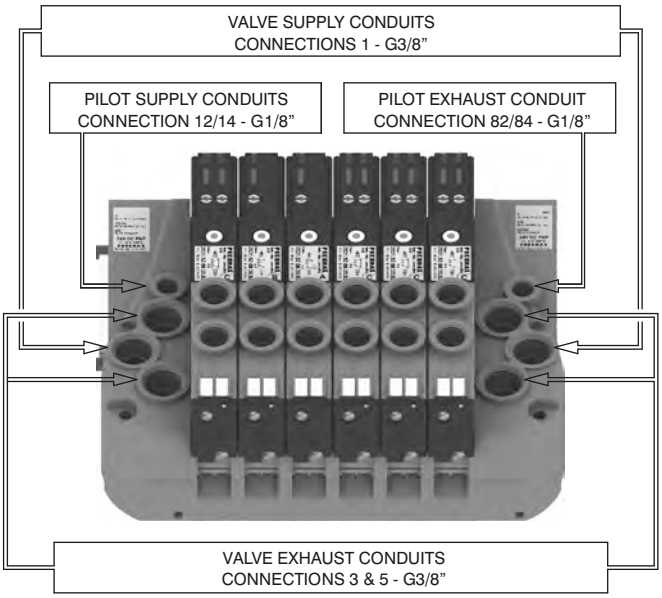

Overall dimensions and technical information are provided solely for informative purposes and may be modified without notice

Manual override actuation

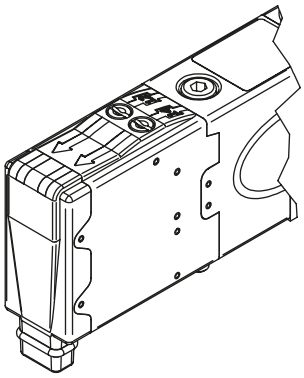

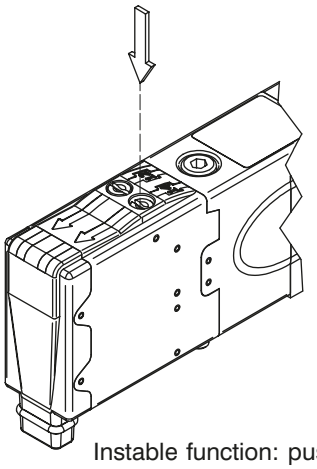

Instable function: push to actuate (when released it moves back to the original position).

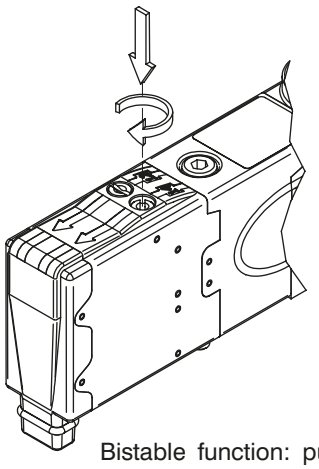

Bistable function: push and turn to get the bistable function

NOTE : It is strongly suggested to replace the original position after using

Valve Installation

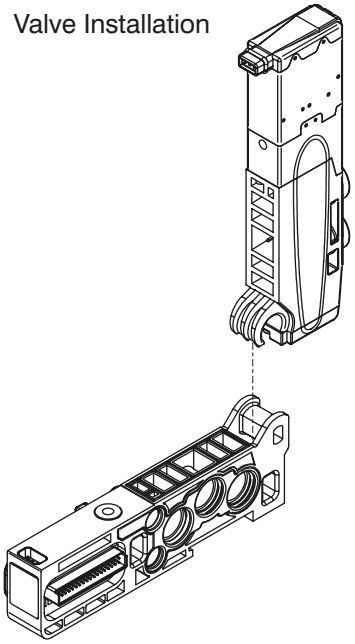

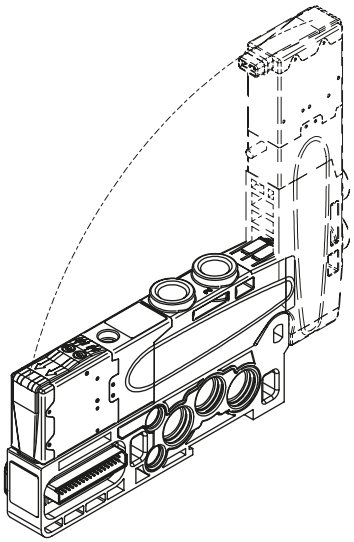

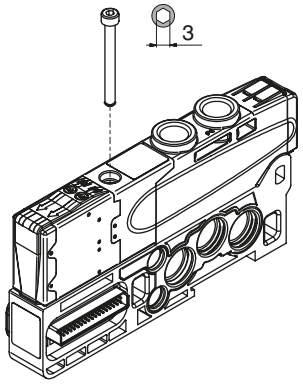

NOTE: Torque moment 1 Nm

Manifold assembly

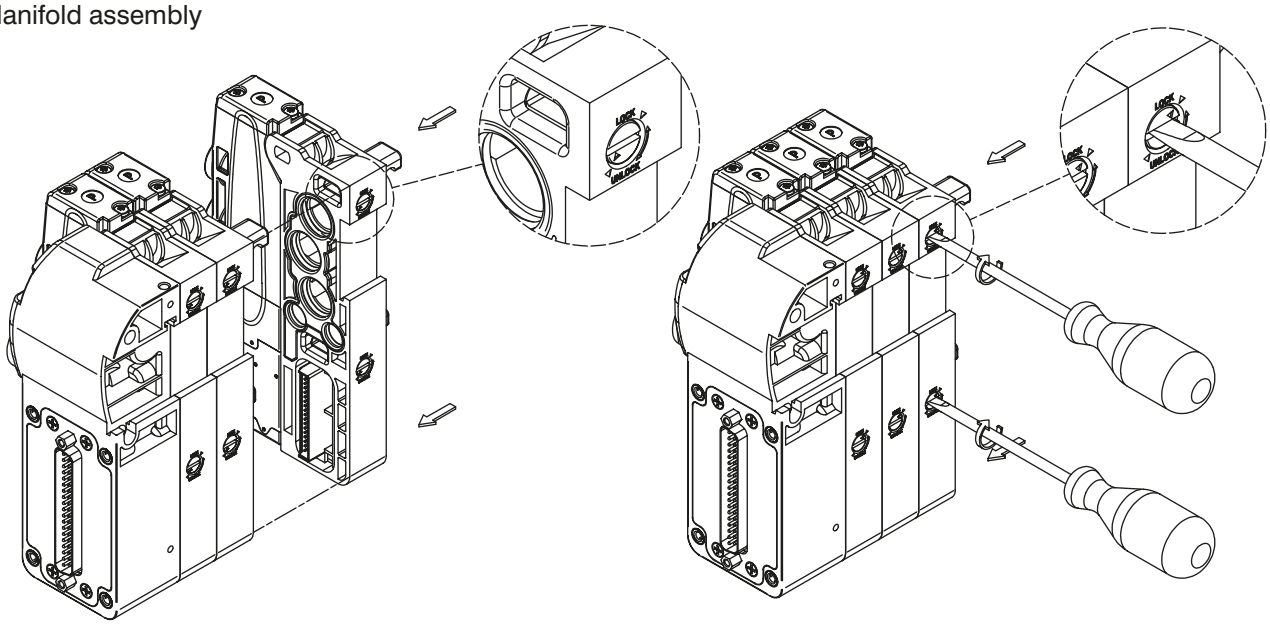

Manifold Layout configuration

MULTIPOINT CONNECTION

MP = PNP 24 V DC
MN = NPN 24 V DC
MA = 24 V AC

LEFT ENDPLATE

A2 = 25 poles - Self feeding
A3 = 37 poles - Self feeding
E2 = 25 poles - External feeding
E3 = 37 poles - External feeding
AM = 16 signals - Self feeding
EM = 16 signals - External feeding

RIGHT ENDPLATE

U0 = Closed
U2 = 25 Poles
U3 = 37 Poles

I/O MODULE

M8
(Requires 25 poles right endplate)

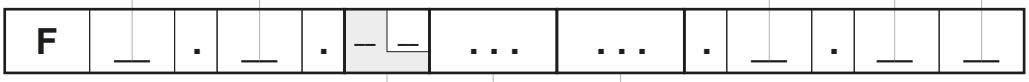

MODUL CONFIGURATION

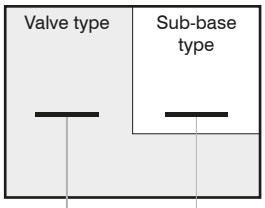

ACCESSORIES CONFIGURATION

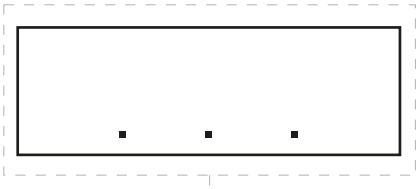

SHORT CODE FUNCTION / CONNECTION :

A1= 5/2 SOL.-SPRING + BASE TYPE 1 (1 electrical signal occupied)
A2= 5/2 SOL.-SPRING + BASE TYPE 2 (2 electrical signals occupied)
B1= 5/2 SOL.-DIFFERENTIAL + BASE TYPE 1 (1 electrical signal occupied)
B2= 5/2 SOL.-DIFFERENTIAL + BASE TYPE 2 (2 electrical signals occupied)
C2= 5/2 SOL.-SOL. + BASE TYPE 2 (2 electrical signals occupied)
E2= 5/3 CC SOL.-SOL. + BASE TYPE 2 (2 electrical signals occupied)
F2= 2x3/2 NC-NC (= 5/3 OC) SOL.-SOL.+BASE TYPE 2 (2 electrical signals occupied)
G2= 2x3/2 NO-NO (= 5/3 PC) SOL.-SOL.+BASE TYPE 2 (2 electrical signals occupied)
H2= 2x3/2 NC-NO SOL.-SOL. + BASE TYPE 2 (2 electrical signals occupied)
I2= 2x3/2 NO-NC SOL.-SOL. + BASE TYPE 2 (2 electrical signals occupied)
T1= FREE VALVE SPACE PLUG + BASE FOR MONOSTABLE VALVE
T2= FREE VALVE SPACE PLUG + BASE FOR BISTABLE VALVE

ACCESSORIES

U2 = Power supply 2 positions module
U4 = Power supply 4 positions module
W = Intermediate supply & exhaust module
X = Diaphragm plug on pipe 1
Y = Diaphragm plug on pipe 3
Z = Diaphragm plug on pipe 5
XY = Diaphragm plug on pipe 1 & 3
ZX = Diaphragm plug on pipe 5 & 1
ZY = Diaphragm plug on pipe 5 & 3
ZXY = Diaphragm plug on pipe 5, 1 & 3

NOTE:
While configuring the manifold always be careful that the maximum number of electrical signals available is:
32 when an input 37 poles endplate is used.
22 when an input 25 poles endplate is used.
The use of monostable valve mounted on a base type 2 (2 electrical signals occupied) causes the loss of one electric signal.
In this case the monostable valve can be replaced by a bistable valve. The diaphragms plugs are used to intercept the conduits 1,3 & 5 of the base. If it is necessary to interrupt more than one conduit in the same time then put in line the letters which identifies the position (for exemple : regarding the 3 & 5 conduits, put the Y & Z letters).
Should one or more conduits be cut more than one time it is necessary to add the relevant intermediate Supply/Exhaust module.

Series 2500 OPTYMA-F solenoid valve manifolds managed by multipoint connection are "well tried components"

	Well-tried component	- The product is a well-tried product for a safety-related application according to ISO 13849-1. - The relevant basic and well-tried safety principles according ISO 13849-2 for this product are fulfilled. - The suitability of the product for a precise application must be verified and confirmed by the user.
B_{10d}	50.000.000	

Overall dimensions and technical information are provided solely for informative purposes and may be modified without notice

General:

CANopen® module is directly integrated on Optyma-F solenoid valves manifold via a 37 poles connector, normally used for multipolar cable connection.
Optyma-F solenoid valves connected to node must be PNP equivalent (final 02 in ordering code).
The node can be easily installed also on solenoid valves manifold already mounted on equipment.
Module can manage up to 32 solenoid valves, and, in the same time, a max number of 4 Input modules 5225.08F or a max number of 2 Input modules 5225.25F.
CANopen® module recognizes automatically the presence of the Input modules on power on.
Regardless of the number of Input modules connected, the managable solenoid valves are 32.
Node power supply is made by a M12 4P male circular connector.
The separation between node 24 VDC Power supply and outputs 24 VDC allows to switch off the outputs maintaning powered the node and inputs, if present.
Connection to Bus CANopen® is possible via 2 M12 5P male - female circular connectors; these two are connected in parallel and according to CiA Draft Recommendation 303-1 (V. 1.3 : 30 December 2004).
Transmission speed can be set by 3 dip-switches.
The node address can be set by 6 dip-switches using BCD numeration.
The module includes an internal terminating resistance that can be activated by a dip-switch.

Ordering code

5525.32F

Scheme / Overall dimensions and I/O layout :

POWER SUPPLY connector

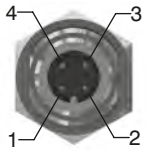

M12 4P MALE

PIN	DESCRIPTION
1	+24 VDC (NODE & INPUTS)
2	NC
3	GND
4	+24 VDC (OUTPUTS)

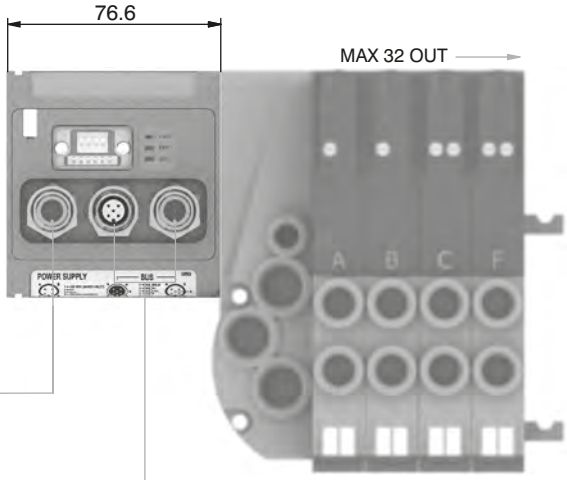

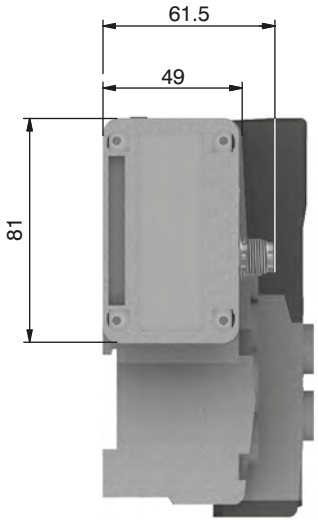

NETWORK connectors

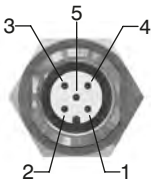

M12 5P FEMALE

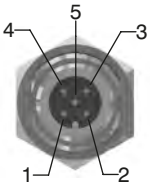

M12 5P MALE

PIN	SIGNAL	DESCRIPTION
1	CAN_SHLD	Optional CAN Shield
2	CAN_V+	Optional CAN external positive supply (Dedicated for supply of transceiver and Optocouplers, if galvanic isolation of the bus node applies)
3	CAN_GND	Ground / 0V / V-
4	CAN_H	CAN_H bus line (dominant high)
5	CAN_L	CAN_L bus line (dominant low)

Technical characteristics

	Model	5525.32F
	Specifications	CiA Draft Standard Proposal 301 V 4.10 (15 August 2006)
	Case	Reinforced technopolymer
Power supply	Power supply connection	M12 4P male connector (IEC 60947-5-2)
	Power supply voltage	+24 VDC +/- 10%
	Node consumption (without inputs)	30 mA
	Power supply diagnosis	Green LED PWR
Outputs	PNP equivalent outputs	+24 VDC +/- 10%
	Maximum current for output	100 mA
	Maximum output number	32
	Max output simultaneously actuated	32
Network	Network connectors	2 M12 5P connectors male-female type A (IEC 60947-5-2)
	Baud rate	10 - 20 - 50 - 125 - 250 - 500 - 800 - 1000 Kbit/s
	Addresses, possible numbers	From 1 to 63
	Max nodes in net	64 (slave + master)
	Bus maximum recommended length	100 m at 500 Kbit/s
	Bus diagnosis	Green LED + Red LED
	Configuration file	Available from our web site: http://www.pneumaxspa.com
	IP protection grade	IP65 when assembled
	Temperature range	From 0° to +50° C

General:

DeviceNet module is directly integrated on Optyma-F solenoid valves manifold via a 37 poles connector, normally used for multipolar cable connection.
Optyma-F solenoid valves connected to node must be PNP equivalent (final 02 in ordering code).
The node can be easily installed also on solenoid valves manifold already mounted on equipment.
Module can manage up to 32 solenoid valves, and, in the same time, a max number of 4 Input modules 5225.08F or a max number of 2 Input modules 5225.25F.
DeviceNet module recognizes automatically the presence of the Input modules on power on.
Regardless of the number of Input modules connected, the managable solenoid valves are 32.
Node power supply is made by a M12 4P male circular connector.
The separation between node 24 VDC Power supply and outputs 24 VDC allows to switch off the outputs maintaning powered the node and inputs, if present.
Connection to Bus DeviceNet is possible via 2 M12 5P male - female circular connectors; these two are connected in parallel and according to DeviceNet Specifications Volume I, release 2.0.
Transmission speed can be set by 3 dip-switches.
The node address can be set by 6 dip-switches using BCD numeration.
The module includes an internal terminating resistance that can be activated by a dip-switch.

Ordering code

5425.32F

Scheme / Overall dimensions and I/O layout :

POWER SUPPLY connector

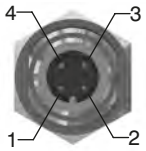

M12 4P MALE

PIN	DESCRIPTION
1	+24 VDC (NODE & INPUTS)
2	NC
3	GND
4	+24 VDC (OUTPUTS)

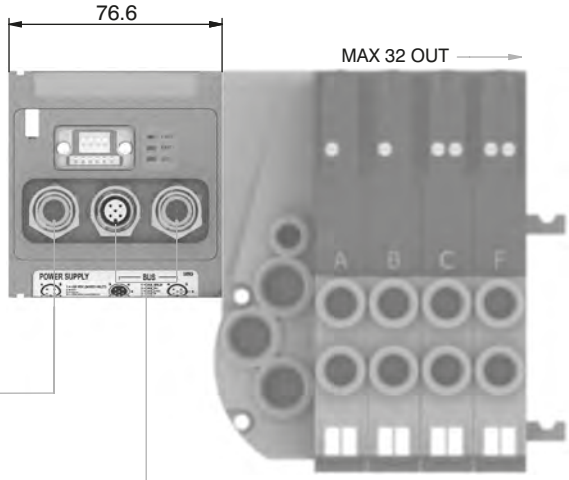

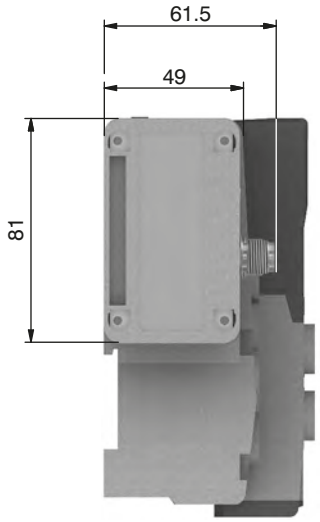

NETWORK connectors

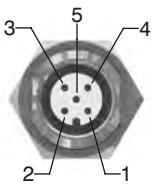

M12 5P FEMALE

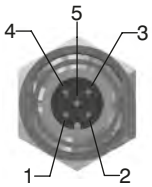

M12 5P MALE

PIN	SIGNAL	DESCRIPTION
1	CAN_SHLD	Optional CAN Shield
2	CAN_V+	Optional CAN external positive supply (Dedicated for supply of transceiver and Optocouplers, if galvanic isolation of the bus node applies)
3	CAN_GND	Ground / 0V / V-
4	CAN_H	CAN_H bus line (dominant high)
5	CAN_L	CAN_L bus line (dominant low)

Technical characteristics

	Model	5425.32F
	Specifications	DeviceNet Specifications Volume I, release 2.0.
	Case	Reinforced technopolymer
Power supply	Power supply connection	M12 4P male connector (IEC 60947-5-2)
	Power supply voltage	+24 VDC +/- 10%
	Node consumption (without inputs)	30 mA
	Power supply diagnosis	Green LED PWR
Outputs	PNP equivalent outputs	+24 VDC +/- 10%
	Maximum current for output	100 mA
	Maximum output number	32
	Max output simultaneously actuated	32
Network	Network connectors	2 M12 5P connectors male-female type A (IEC 60947-5-2)
	Baud rate	125 - 250 - 500 Kbit/s
	Addresses, possible numbers	From 1 to 63
	Max nodes in net	64 (slave + master)
	Bus maximum recommended length	100 m at 500 Kbit/s
	Bus diagnosis	Green LED + Red LED
	Configuration file	Available from our web site: http://www.pneumaxspa.com
	IP protection grade	IP65 when assembled
	Temperature range	From 0° to +50° C

Overall dimensions and technical information are provided solely for informative purposes and may be modified without notice

General:

PROFIBUS DP module is directly integrated on Optyma-F solenoid valves manifold via a 37 poles connector, normally used for multipolar cable connection.
Optyma-F solenoid valves connected to node must be PNP equivalent (final 02 in ordering code).
The node can be easily installed also on solenoid valves manifold already mounted on equipment.
Module can manage up to 32 solenoid valves, and, in the same time, a max number of 4 Input modules 5225.08F or a max number of 4 Input modules 5225.25F.
PROFIBUS DP module recognizes automatically the presence of the Input modules on power on.
Regardless of the number of Input modules connected, the managable solenoid valves are 32.
Node power supply is made by a M12 4P male circular connector.
The separation between node 24 VDC Power supply and outputs 24 VDC allows to switch off the outputs maintaning powered the node and inputs, if present.
Connection to Bus PROFIBUS DP is possible via 2 M12 type B 5P male - female circular connectors; these two are connected in parallel and according to PROFIBUS Interconnection Technology (Version 1.1 : August 2001).
The node address can be set using BCD numeration: 4 dip-switches for the units and 4 dip-switches for the tens.
The module includes an internal terminating resistance that can be activated by 2 dip-switches.

Ordering code

5325.32F

Scheme / Overall dimensions and I/O layout :

POWER SUPPLY connector

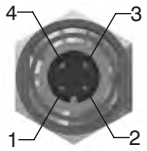

M12 4P MALE

PIN	DESCRIPTION
1	+24 VDC (NODE & INPUTS)
2	NC
3	GND
4	+24 VDC (OUTPUTS)

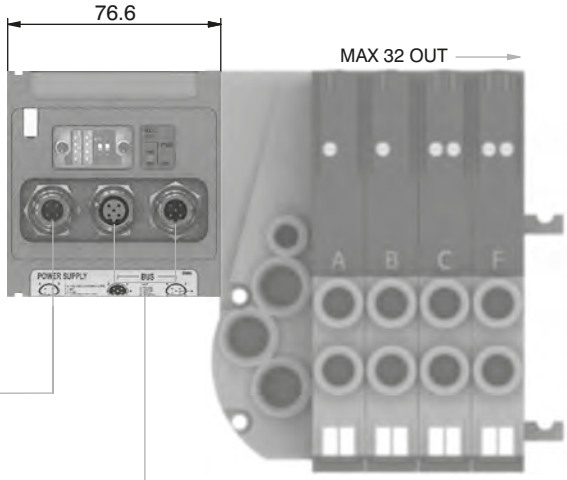

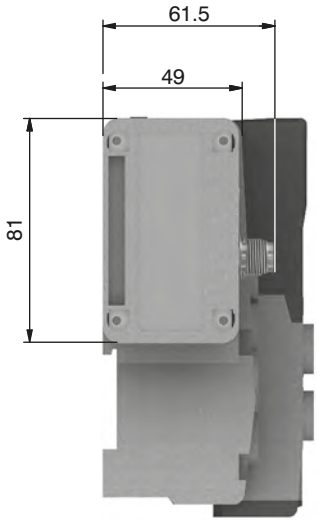

NETWORK connectors

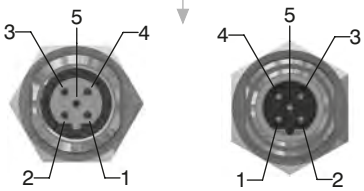

M12 5P FEMALE **M12 5P MALE**

PIN	SIGNAL	DESCRIPTION
1	VP	Power supply plus, (P5V)
2	A-line	Receive / Transmit data -N, A-line
3	DGND	Data Ground (reference potential to VP)
4	B-line	Receive / Transmit data -plus, B-line
5	SHIELD	Shield or PE

Technical characteristics

	Model	5325.32F
	Specifications	PROFIBUS DP
	Case	Reinforced technopolymer
Power supply	Power supply connection	M12 4P male connector (IEC 60947-5-2)
	Power supply voltage	+24 VDC +/- 10%
	Node consumption (without inputs)	50 mA
	Power supply diagnosis	Green LED PWR / Green LED OUT
Outputs	PNP equivalent outputs	+24 VDC +/- 10%
	Maximum current for output	100 mA
	Maximum output number	32
	Max output simultaneously actuated	32
Network	Network connectors	2 M12 5P male-female connectors type B
	Baud rate	9,6 - 19,2 - 93,75 - 187,5 - 500 - 1500 - 3000 - 6000 - 12000 Kbit/s
	Addresses, possible numbers	From 1 to 99
	Max nodes in net	100 (slave + master)
	Bus maximum recommended length	100 m at 12 Mbit/s - 1200 m at 9,6 Kbit/s
	Bus diagnosis	Green LED + Red LED
	Configuration file	Available from our web site: http://www.pneumaxspa.com
	IP protection grade	IP65 when assembled
	Temperature range	From 0° to +50° C

General:

EtherCAT® module is directly integrated on Optyma-F solenoid valves manifold via a 37 poles connector, normally used for multipolar cable connection.
Optyma-F solenoid valves connected to node must be PNP equivalent (final 02 in ordering code).
The node can be easily installed also on solenoid valves manifold already mounted on equipment.
Module can manage up to 32 solenoid valves, and, in the same time, a max number of 4 Input modules 5225.08F or a max number of 2 Input modules 5225.25F.
The EtherCAT® module, regardless the number of Input module connected, reports to have connected 4 Input modules.
Regardless of the number of Input modules connected, the managable solenoid valves are 32.
Node power supply is made by a M12 4P male circular connector.
The separation between node 24 VDC Power supply and outputs 24 VDC allows to switch off the outputs maintaning powered the node and inputs, if present.
Connection to Bus EtherCAT® is possible via 2 M12 4P type D female circular connectors. These two connectors lead the signal to two different communication ports, so they are not connected in parallel.
The node address is assigned during configuration.
Note: 5700 series has a different configuration file from series 5600.

Ordering code

5725.32F.EC

Scheme / Overall dimensions and I/O layout :

POWER SUPPLY connector

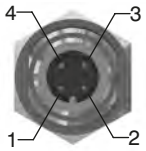

M12 4P MALE

PIN	DESCRIPTION
1	+24 VDC (NODE & INPUTS)
2	NC
3	GND
4	+24 VDC (OUTPUTS)

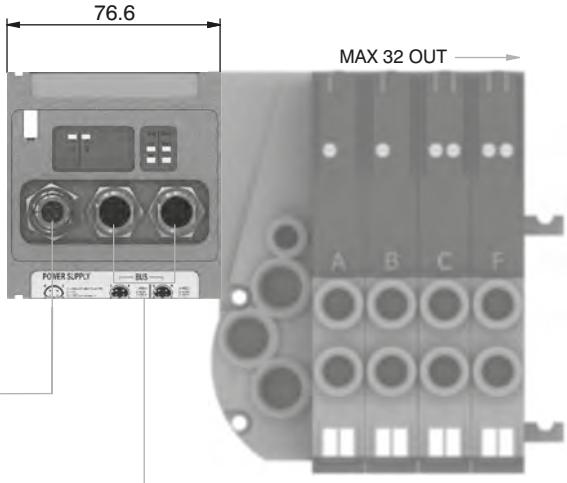

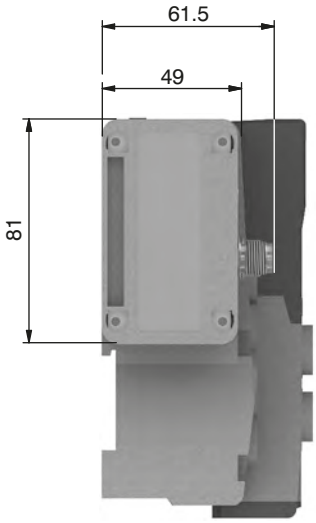

NETWORK connectors

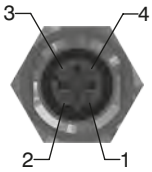

M12 4P FEMALE

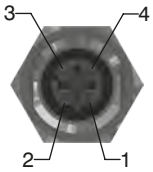

M12 4P FEMALE

PIN	SIGNAL	DESCRIPTION
1	TX+	Ethernet Transmit High
2	RX+	Ethernet Receive High
3	TX-	Ethernet Transmit Low
4	RX-	Ethernet Receive Low

Technical characteristics

	Model	5725.32F.EC
	Specifications	EtherCAT® Specifications ETG.1000 series
	Case	Reinforced technopolymer
Power supply	Power supply connection	M12 4P male connector (IEC 60947-5-2)
	Power supply voltage	+24 VDC +/- 10%
	Node consumption (without inputs)	400 mA
	Power supply diagnosis	Green LED PWR / Green LED OUT
Outputs	PNP equivalent outputs	+24 VDC +/- 10%
	Maximum current for output	100 mA
	Maximum output number	32
	Max output simultaneously actuated	32
Network	Network connectors	2 M12 4P female connectors type D (IEC 61076-2-101)
	Baud rate	100 Mbit/s
	Addresses, possible numbers	From 1 to 65535
	Max nodes in net	65536 (slave + master)
	Maximum distance between 2 nodes	100 m
	Bus diagnosis	1 green and 1 red LED for status + 2 LEDs for link & activity
	Configuration file	Available from our web site: http://www.pneumaxspa.com
	IP protection grade	IP65 when assembled
	Temperature range	From 0° to +50° C

Overall dimensions and technical information are provided solely for informative purposes and may be modified without notice

General:

PROFINET IO RT module is directly integrated on Optyma-F solenoid valves manifold via a 37 poles connector, normally used for multipolar cable connection.
Optyma-F solenoid valves connected to node must be PNP equivalent (final 02 in ordering code).
The node can be easily installed also on solenoid valves manifold already mounted on equipment.
Module can manage up to 32 solenoid valves, and, in the same time, a max number of 4 Input modules 5225.08F or a max number of 4 Input modules 5225.25F.
The PROFINET IO RT module, regardless the number of Input module connected, reports to have connected 8 Input modules.
Regardless of the number of Input modules connected, the managable solenoid valves are 32.
Node power supply is made by a M12 4P male circular connector.
The separation between node 24 VDC Power supply and outputs 24 VDC allows to switch off the outputs maintaning powered the node and inputs, if present.
Connection to Bus PROFINET IO RT is possible via 2 M12 4P type D female circular connectors. These two connectors lead the signal to two different communication ports, so they are not connected in parallel.
The node address is assigned during configuration.

Ordering code

5725.32F.PN

Scheme / Overall dimensions and I/O layout :

POWER SUPPLY connector

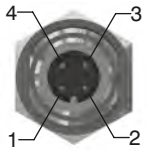

M12 4P MALE

PIN	DESCRIPTION
1	+24 VDC (NODE & INPUTS)
2	NC
3	GND
4	+24 VDC (OUTPUTS)

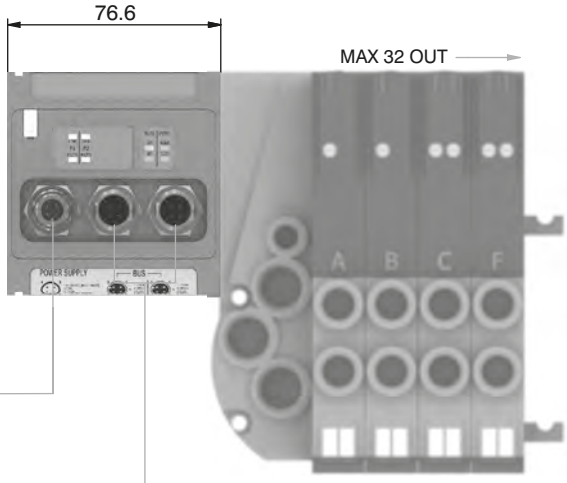

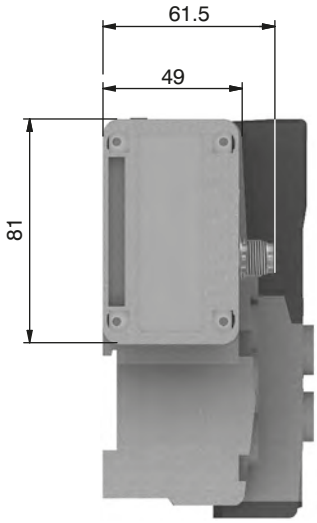

NETWORK connectors

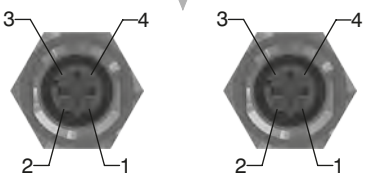

M12 4P FEMALE **M12 4P FEMALE**

PIN	SIGNAL	DESCRIPTION
1	TX+	Ethernet Transmit High
2	RX+	Ethernet Receive High
3	TX-	Ethernet Transmit Low
4	RX-	Ethernet Receive Low

Technical characteristics

	Model	5725.32F.PN
	Specifications	PROFINET IO RT
	Case	Reinforced technopolymer
Power supply	Power supply connection	M12 4P male connector (IEC 60947-5-2)
	Power supply voltage	+24 VDC +/- 10%
	Node consumption (without inputs)	400 mA
	Power supply diagnosis	Green LED PWR / Green LED OUT
Outputs	PNP equivalent outputs	+24 VDC +/- 10%
	Maximum current for output	100 mA
	Maximum output number	32
	Max output simultaneously actuated	32
Network	Network connectors	2 M12 4P female connectors type D (IEC 61076-2-101)
	Baud rate	100 Mbit/s
	Addresses, possible numbers	As an IP address
	Max nodes in net	As an Ethernet Network
	Maximum distance between 2 nodes	100 m
	Bus diagnosis	1 green and 1 red LED for status + 4 LEDs for link & activity
	Configuration file	Available from our web site: http://www.pneumaxspa.com
	IP protection grade	IP65 when assembled
	Temperature range	From 0° to +50° C

Overall dimensions and technical information are provided solely for informative purposes and may be modified without notice

General:

EtherNet/IP module is directly integrated on Optyma-F solenoid valves manifold via a 37 poles connector, normally used for multipolar cable connection.
Optyma-F solenoid valves connected to node must be PNP equivalent (final 02 in ordering code).
The node can be easily installed also on solenoid valves manifold already mounted on equipment.
Module can manage up to 32 solenoid valves, and, in the same time, a max number of 4 Input modules 5225.08F or a max number of 4 Input modules 5225.25F.
The EtherNet/IP module, regardless the number of Input module connected, reports to have connected 8 Input modules.
Regardless of the number of Input modules connected, the managable solenoid valves are 32.
Node power supply is made by a M12 4P male circular connector.
The separation between node 24 VDC Power supply and outputs 24 VDC allows to switch off the outputs maintaning powered the node and inputs, if present.
Connection to Bus EtherNet/IP is possible via 2 M12 4P type D female circular connectors. These two connectors lead the signal to two different communication ports, so they are not connected in parallel.
The node address is assigned during configuration.

Ordering code

5725.32F.EI

Scheme / Overall dimensions and I/O layout :

POWER SUPPLY connector

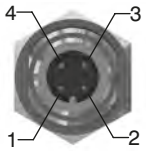

M12 4P MALE

PIN	DESCRIPTION
1	+24 VDC (NODE & INPUTS)
2	NC
3	GND
4	+24 VDC (OUTPUTS)

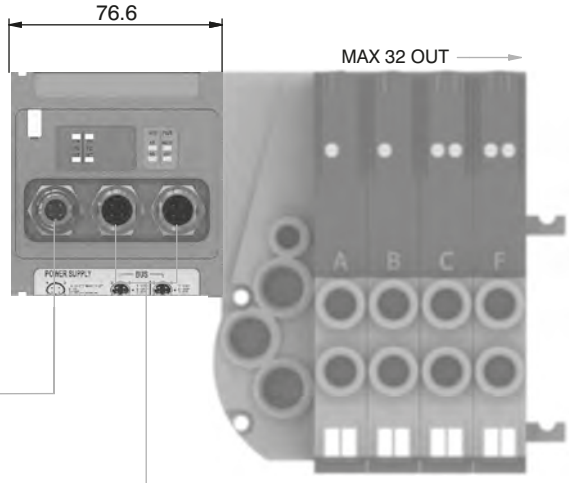

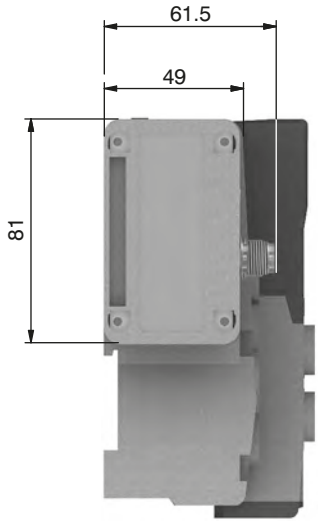

NETWORK connectors

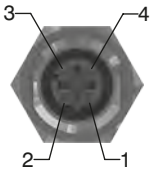

M12 4P FEMALE

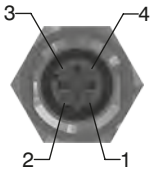

M12 4P FEMALE

PIN	SIGNAL	DESCRIPTION
1	TX+	Ethernet Transmit High
2	RX+	Ethernet Receive High
3	TX-	Ethernet Transmit Low
4	RX-	Ethernet Receive Low

Technical characteristics

	Model	5725.32F.EI
	Specifications	The EtherNet/IP Specification
	Case	Reinforced technopolymer
Power supply	Power supply connection	M12 4P male connector (IEC 60947-5-2)
	Power supply voltage	+24 VDC +/- 10%
	Node consumption (without inputs)	400 mA
	Power supply diagnosis	Green LED PWR / Green LED OUT
Outputs	PNP equivalent outputs	+24 VDC +/- 10%
	Maximum current for output	100 mA
	Maximum output number	32
	Max output simultaneously actuated	32
Network	Network connectors	2 M12 4P female connectors type D (IEC 61076-2-101)
	Baud rate	100 Mbit/s
	Addresses, possible numbers	As an IP address
	Max nodes in net	As an Ethernet Network
	Maximum distance between 2 nodes	100 m
	Bus diagnosis	1 green and 1 red LED for status + 4 LEDs for link & activity
	Configuration file	Available from our web site: http://www.pneumaxspa.com
	IP protection grade	IP65 when assembled
	Temperature range	From 0° to +50° C

Overall dimensions and technical information are provided solely for informative purposes and may be modified without notice

General:

Powerlink module is directly integrated on Optyma-F solenoid valves manifold via a 37 poles connector, normally used for multipolar cable connection.
Optyma-F solenoid valves connected to node must be PNP equivalent (final 02 in ordering code).
The node can be easily installed also on solenoid valves manifold already mounted on equipment.
Module can manage up to 32 solenoid valves, and, in the same time, a max number of 4 Input modules 5225.08F or a max number of 4 Input modules 5225.25F.
The Powerlink module, regardless the number of Input module connected, reports to have connected 8 Input modules.
Regardless of the number of Input modules connected, the managable solenoid valves are 32.
Node power supply is made by a M12 4P male circular connector.
The separation between node 24 VDC Power supply and outputs 24 VDC allows to switch off the outputs maintaning powered the node and inputs, if present.
Connection to Bus Powerlink is possible via 2 M12 4P type D female circular connectors. These two connectors lead the signal to two different communication ports, so they are not connected in parallel.
The node address is assigned during configuration.

Ordering code

5725.32F.PL

Scheme / Overall dimensions and I/O layout :

POWER SUPPLY connector

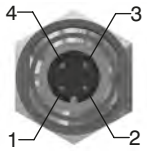

M12 4P MALE

PIN	DESCRIPTION
1	+24 VDC (NODE & INPUTS)
2	NC
3	GND
4	+24 VDC (OUTPUTS)

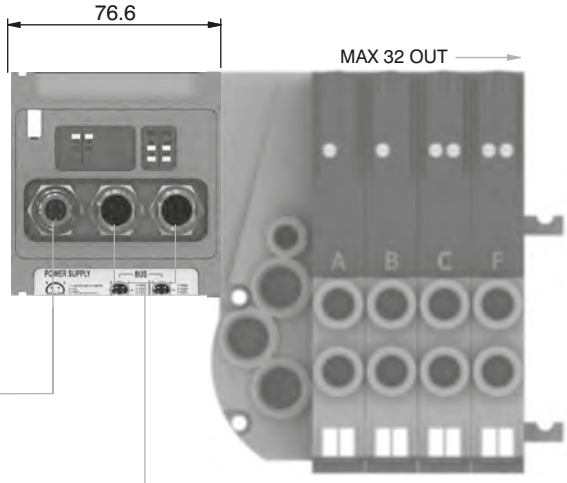

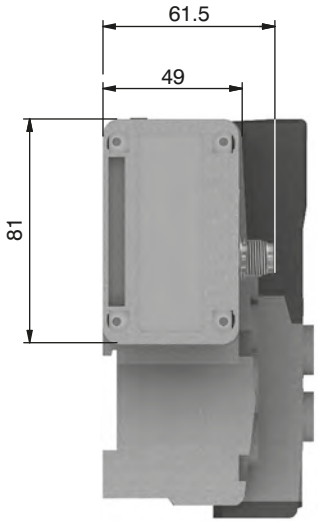

NETWORK connectors

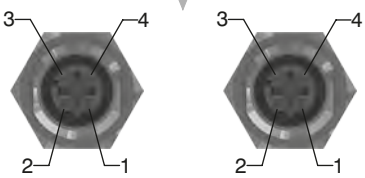

M12 4P FEMALE M12 4P FEMALE

PIN	SIGNAL	DESCRIPTION
1	TX+	Ethernet Transmit High
2	RX+	Ethernet Receive High
3	TX-	Ethernet Transmit Low
4	RX-	Ethernet Receive Low

Technical characteristics

	Model	5725.32F.PL
	Specifications	Ethernet POWERLINK Communication Profile Specifications
	Case	Reinforced technopolymer
Power supply	Power supply connection	M12 4P male connector (IEC 60947-5-2)
	Power supply voltage	+24 VDC +/- 10%
	Node consumption (without inputs)	400 mA
	Power supply diagnosis	Green LED PWR / Green LED OUT
Outputs	PNP equivalent outputs	+24 VDC +/- 10%
	Maximum current for output	100 mA
	Maximum output number	32
	Max output simultaneously actuated	32
Network	Network connectors	2 M12 4P female connectors type D (IEC 61076-2-101)
	Baud rate	100 Mbit/s
	Addresses, possible numbers	239
	Max nodes in net	240
	Maximum distance between 2 nodes	100 m
	Bus diagnosis	1 green and 1 red LED for status + 2 LEDs for link & activity
	Configuration file	Available from our web site: http://www.pneumaxspa.com
	IP protection grade	IP65 when assembled
	Temperature range	From 0° to +50° C

General:

Modbus/TCP module is directly integrated on Optyma-F solenoid valves manifold via a 37 poles connector, normally used for multipolar cable connection.
Optyma-F solenoid valves connected to node must be PNP equivalent (final 02 in ordering code).
The node can be easily installed also on solenoid valves manifold already mounted on equipment.
Module can manage up to 32 solenoid valves, and, in the same time, a max number of 4 Input modules 5225.08F or a max number of 4 Input modules 5225.25F.
The Modbus/TCP module, regardless the number of Input module connected, reports to have connected 8 Input modules.
Regardless of the number of Input modules connected, the managable solenoid valves are 32.
Node power supply is made by a M12 4P male circular connector.
The separation between node 24 VDC Power supply and outputs 24 VDC allows to switch off the outputs maintaning powered the node and inputs, if present.
Connection to Bus Modbus/TCP is possible via 2 M12 4P type D female circular connectors. These two connectors lead the signal to two different communication ports, so they are not connected in parallel.
The node address is assigned during configuration.

Ordering code

5725.32F.MT

Scheme / Overall dimensions and I/O layout :

POWER SUPPLY connector

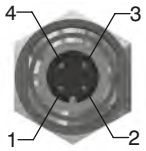

M12 4P MALE

PIN	DESCRIPTION
1	+24 VDC (NODE & INPUTS)
2	NC
3	GND
4	+24 VDC (OUTPUTS)

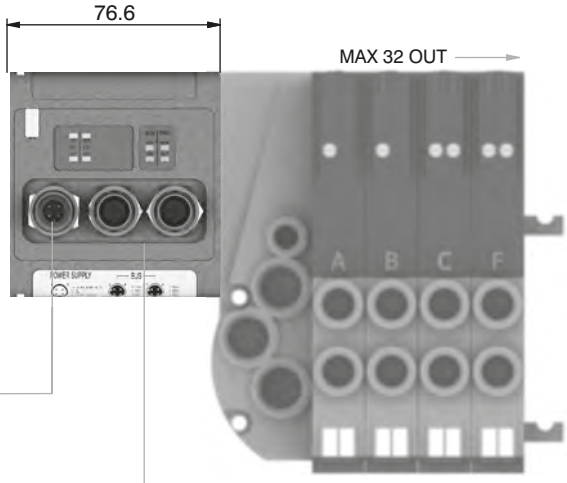

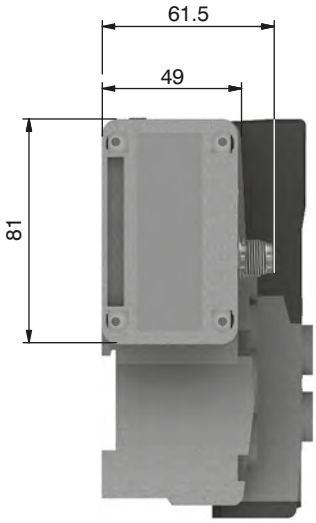

NETWORK connectors

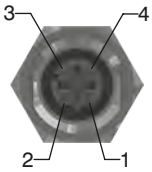

M12 4P FEMALE

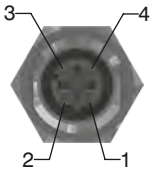

M12 4P FEMALE

PIN	SIGNAL	DESCRIPTION
1	TX+	Ethernet Transmit High
2	RX+	Ethernet Receive High
3	TX-	Ethernet Transmit Low
4	RX-	Ethernet Receive Low

Technical characteristics

	Model	5725.32F.MT
	Specifications	MODBUS Application Protocol Specification V1.1a, June 4, 2004
	Case	Reinforced technopolymer
Power supply	Power supply connection	M12 4P male connector (IEC 60947-5-2)
	Power supply voltage	+24 VDC +/- 10%
	Node consumption (without inputs)	400 mA
	Power supply diagnosis	Green LED PWR / Green LED OUT
Outputs	PNP equivalent outputs	+24 VDC +/- 10%
	Maximum current for output	100 mA
	Maximum output number	32
	Max output simultaneously actuated	32
Network	Network connectors	2 M12 4P female connectors type D (IEC 61076-2-101)
	Baud rate	100 Mbit/s
	Addresses, possible numbers	248
	Max nodes in net	248
	Maximum distance between 2 nodes	100 m
	Bus diagnosis	1 green and 1 red LED for status + 2 LEDs for link & activity
	Configuration file	Modbus/TCP nodes don't require configuration file
	IP protection grade	IP65 when assembled
	Temperature range	From 0° to +50° C

Overall dimensions and technical information are provided solely for informative purposes and may be modified without notice

General:

Modules have 8 connectors M8 3P female.

The Inputs are PNP equivalent 24 VDC ±10%.
To each connector it is possible to plug both 2 wires Inputs (switches, magnetic switches pressure switches, etc.) or 3 wires Inputs (proximity, photocells, electronic sensors, etc).
The maximum current available for all 8 Inputs is 200 mA.
Each module includes a 200 mA self-mending fuse. If a short circuit or a overcharge (overall current >200mA) occur the safety device acts cutting the 24 VDC power supply to all M8 connectors on the module and switching off the green LED PWR. Any other Input module connected to the node will remain powered and will function correctly.
Once the cause of the fault disappears the green LED PWR lights up indicating the ON state and the node will re-start to operate.
The maximum number of Input modules supported is 4.

Ordering code

5225.08F

Scheme / Overall dimensions and I/O layout :

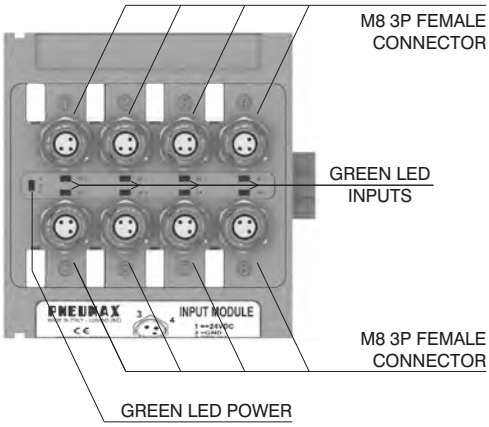

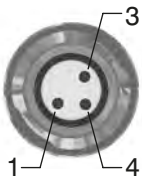

PIN	DESCRIPTION
1	+24 VDC
4	INPUT
3	GND

Module 1

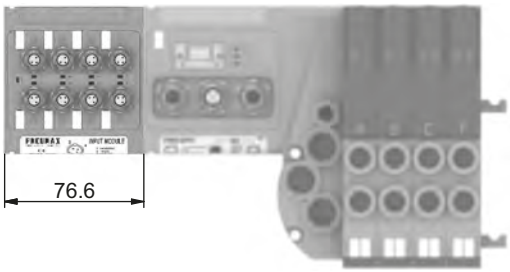

Module 2 Module 1

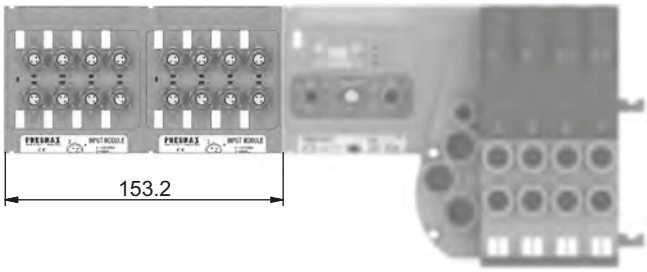

Module 3 Module 2 Module 1

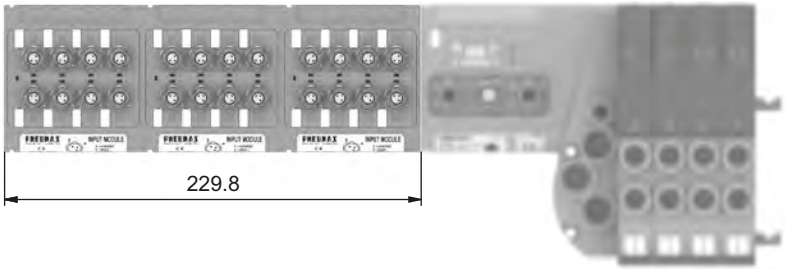

Module 4 Module 3 Module 2 Module 1

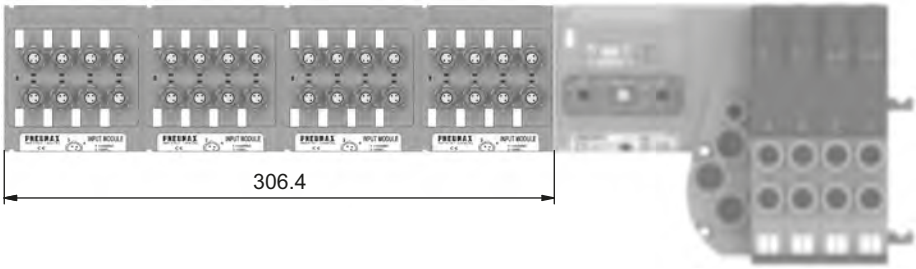

General :

Modules are fitted with SUB-D 25 pin female connector.

The Inputs are PNP equivalent 24VDC ±10%.
To the connector it is possible to connect both 2 wires Inputs (switches, magnetic switches pressure switches etc.) or 3 wires (proximity, photocells, electronic end of stroke sensors etc).
The maximum current available for all 16 Inputs is 750 mA.
Each module includes a 750 mA self-mending fuse. Should a short circuit or a overcharge (overall current >750mA) occur the safety device intervenes cutting the 24VDC power supply to all pins and switching off the green LED PWR. Any other Input module connected to the node will remain powered and will function correctly.
Once the cause of the fault is removed the green LED lights up indicating the ON state and the node will re-start to operate. This16 Inputs module is counted as two 8 Inputs modules.

The Maximum number of 16 Inputs modules supported is 2 for CANopen®, DeviceNet and EtherCAT®.
The Maximum number of 16 Inputs modules supported is 4 for PROFIBUS DP, PROFINET IO RT, EtherNet/IP and Powerlink.

Ordering code

5225.25F

Scheme / Overall dimensions and I/O layout :

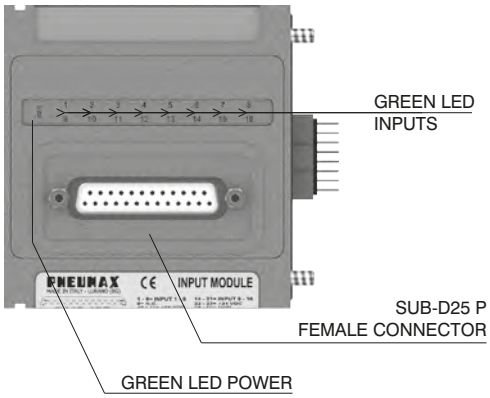

Module 1

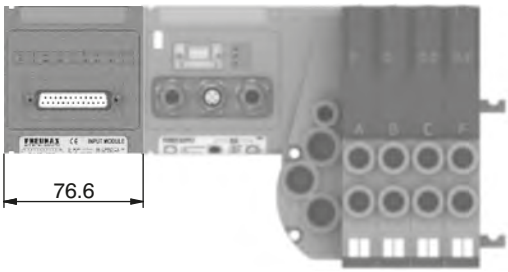

Module 2 Module 1

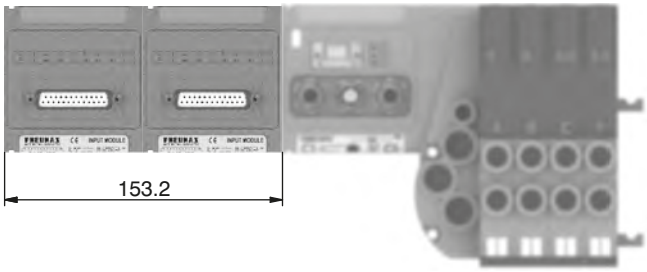

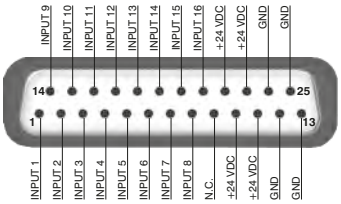

Overall dimensions and technical information are provided solely for informative purposes and may be modified without notice

General :

This module is fitted with two M8 3 pin female connectors.

With this module is possible to read two analogue inputs (voltage or current).
The inputs are sampled at 12 bit.
For practicality the sampled value is transmitted with 16 bit, of which the four less significant are fixed at zero.

Available models:
5225.2T.00F (voltage signal 0 - 10V);
5225.2T.01F (voltage signal 0 - 5V);
5225.2C.00F (current signal 4 - 20mA);
5225.2C.01F (current signal 0 - 20mA).

Each module includes a 300 mA self-mending fuse. Should a short circuit or a overcharge (overall current >300mA) occur the safety device intervenes cutting the 24VDC power supply to all M8 connectors on the module and switching off the green LED PWR. Any other Input module connected to the node will remain powered and will function correctly.
Once the cause of the fault is removed the green LED lights up indicating the ON state and the node will re-start to operate.

This module is counted as four 8 digital Inputs modules.

The Maximum number of 2 analogue Inputs modules supported is 1 for CANopen®, DeviceNet, PROFIBUS DP and EtherCAT®.
The Maximum number of 2 analogue Inputs modules supported is 2 for PROFINET IO RT, EtherNet/IP and Powerlink.

Ordering code

5225.2 _ . _ _F

Scheme / Overall dimensions and I/O layout :

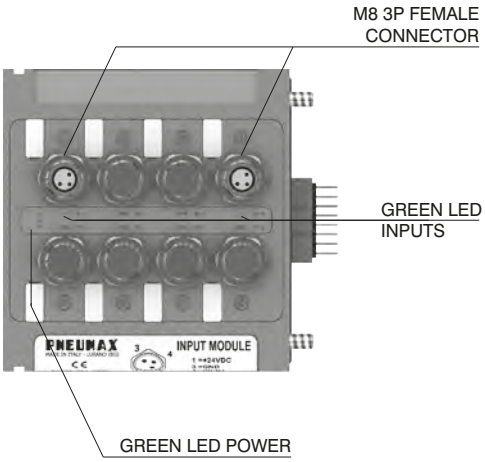

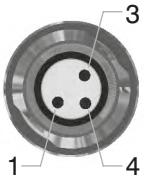

PIN	DESCRIPTION
1	+24 VDC
4	INPUT
3	GND

Module 1

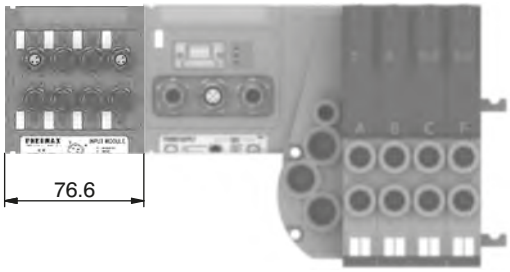

Module 2 Module 1

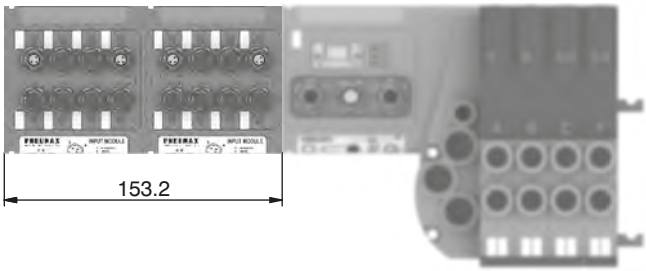

POWER SUPPLY connector

Socket for Power Supply
STRAIGHT CONNECTOR
M12A 4P FEMALE

Ordering code

5312A.F04.00

Upper view
Slave connector

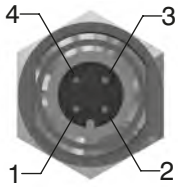

PIN	DESCRIPTION
1	+24 VDC Node
2	
3	0 V
4	+24 VDC Outputs

NETWORK connectors

Socket for Bus CANopen®/DeviceNet
STRAIGHT CONNECTOR
M12A 5P FEMALE

Ordering code

5312A.F05.00

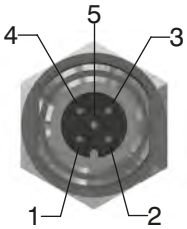

Plug for Bus CANopen®/DeviceNet
STRAIGHT CONNECTOR
M12A 5P MALE

Ordering code

5312A.M05.00

PIN	DESCRIPTION
1	(CAN_SHIELD)
2	(CAN_V+)
3	CAN_GND
4	CAN_H
5	CAN_L

Upper view
Slave connector

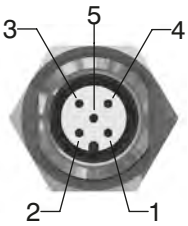

Plug for Bus EtherCAT®,
PROFINET IO RT,
EtherNet/IP and Powerlink
STRAIGHT CONNECTOR M12D 4P MALE

Ordering code

5312D.M04.00

PIN	SIGNAL	DESCRIPTION
1	TX+	Ethernet Transmit High
2	RX+	Ethernet Receive High
3	TX-	Ethernet Transmit Low
4	RX-	Ethernet Receive Low

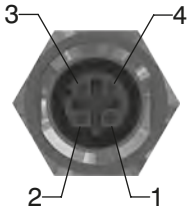

Upper view
Slave connector

Socket for Bus PROFIBUS DP
STRAIGHT CONNECTOR
M12B 5P FEMALE

Ordering code

5312B.F05.00

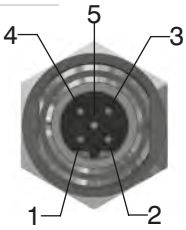

PIN	DESCRIPTION
1	Power Supply
2	A-line
3	DGND
4	B-line
5	SHIELD

Upper view
Slave connector

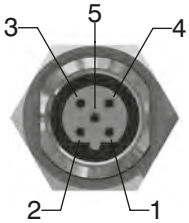

Plug for Bus PROFIBUS DP
STRAIGHT CONNECTOR
M12B 5P MALE

Ordering code

5312B.M05.00

INPUT connectors

Plug for Input module
STRAIGHT CONNECTOR
M8 3P MALE

Ordering code

5308A.M03.00

Upper view
Slave connector

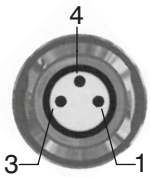

PIN	DESCRIPTION
1	+24 VDC
4	INPUT
3	GND

Plugs

M12 plug

Ordering code

5300.T12

M8 plug

Ordering code

5300.T08

Trademarks: EtherCAT® is registered trademark and patented technology, licensed by Beckhoff Automation GmbH, Germany.

Overall dimensions and technical information are provided solely for informative purposes and may be modified without notice

Manifold Layout configuration

LEFT ENDPLATE

A3 = 37 poles - Self feeding
E3 = 37 poles - External feeding

RIGHT ENDPLATE

U0 = Closed
U2 = 25 Poles
U3 = 37 Poles

32 OUT VERSION

C3 = CANopen® 32OUT
D3 = DeviceNet 32OUT
P3 = PROFIBUS 32OUT
A3 = EtherCAT® 32OUT (5700 Series)
I3 = EtherNet / IP 32OUT PROFINET
N3 = IO RT 32OUT
L3 = Powerlink 32OUT
M3 = Modbus/TCP 32OUT

INPUT MODULES

A = No module
D1= 8 M8 digital Inputs module
D3= 16 digital Inputs (SUB-D 25) module
T1= 2 analogue Inputs 0-5V module
T2= 2 analogue Inputs 0-10V module
C1= 2 analogue Inputs 0-20mA module
C2= 2 analogue Inputs 4-20mA module

I/O MODULE

M8
(Requires 25 poles right endplate)

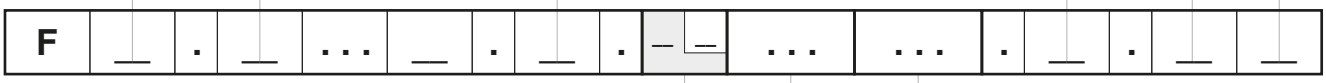

MODUL CONFIGURATION

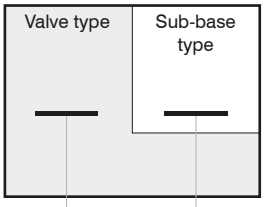

ACCESSORIES CONFIGURATION

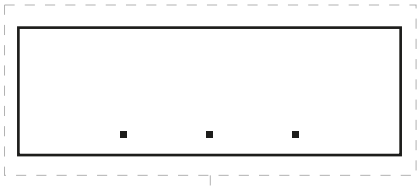

SHORT CODE FUNCTION / CONNECTION :

A1= 5/2 SOL.-SPRING + BASE TYPE 1 (1 electrical signal occupied)
A2= 5/2 SOL.-SPRING + BASE TYPE 2 (2 electrical signals occupied)
B1= 5/2 SOL.-DIFFERENTIAL + BASE TYPE 1 (1 electrical signal occupied)
B2= 5/2 SOL.-DIFFERENTIAL + BASE TYPE 2 (2 electrical signals occupied)
C2= 5/2 SOL.-SOL. + BASE TYPE 2 (2 electrical signals occupied)
E2= 5/3 CC SOL.-SOL. + BASE TYPE 2 (2 electrical signals occupied)
F2= 2x3/2 NC-NC (= 5/3 OC) SOL.-SOL.+BASE TYPE 2 (2 electrical signals occupied)
G2= 2x3/2 NO-NO (= 5/3 PC) SOL.-SOL.+BASE TYPE 2 (2 electrical signals occupied)
H2= 2x3/2 NC-NO SOL.-SOL. + BASE TYPE 2 (2 electrical signals occupied)
I2= 2x3/2 NO-NC SOL.-SOL. + BASE TYPE 2 (2 electrical signals occupied)
T1= FREE VALVE SPACE PLUG + BASE FOR MONOSTABLE VALVE
T2= FREE VALVE SPACE PLUG + BASE FOR BISTABLE VALVE

ACCESSORIES

U2 = Power supply 2 positions module
U4 = Power supply 4 positions module
W = Intermediate supply & exhaust module
X = Diaphragm plug on pipe 1
Y = Diaphragm plug on pipe 3
Z = Diaphragm plug on pipe 5
XY = Diaphragm plug on pipe 1 & 3
ZX = Diaphragm plug on pipe 5 & 1
ZY = Diaphragm plug on pipe 5 & 3
ZXY = Diaphragm plug on pipe 5, 1 & 3

NOTE:
While configuring the manifold always be careful that the maximum number of electrical signals available is 32.
The use of monostable valve mounted on a base type 2 (2 electrical signals occupied) causes the loss of one electric signal. In this case the monostable valve can be replaced by a bistable valve. The diaphragms plugs are used to intercept the conduits 1,3 & 5 of the base. If it is necessary to interrupt more than one conduit in the same time then put in line the letters which identifies the position (for exemple : regarding the 3 & 5 conduits, put the Y & Z letters).
Should one or more conduits be cut more than one time it is necessary to add the relevant intermediate Supply/Exhaust module.

Series 2500 "OPTYMA-T"

General

With the introduction of the “T” configuration of solenoid valves with integrated pneumatic connections fitted directly on the sub base the 2500 series (called OPTYMA) is now richer than ever.
Many technical features make the new product interesting:

- Flow rate of 800 Nl/min
- Tie rod system to hold the sub bases together
- All pneumatic connections (push-in) on the same side of the manifold
- Quick mounting of the valve to the base using just one screw
- Possibility to replace the valve without the need to disconnect the connections
- Possibility to use different pressures along the manifold (including vacuum)
- IP65 environmental protection
- Electrical connection directly integrated into the base, 32 electrical signals available (can be used to build up a manifold of 32 monostable valves, 16 bistable valves or any combination within that limit).
- The electrical connection is made via 37 pin D-SUB connector.
- It is also available a 25-pole connector that is able to manage a maximum number of 22 electrical signals.

Possibility to integrate with Field Bus modules CANopen®, PROFIBUS DP, DeviceNet, EtherNet/IP, PROFINET IO RT/IRT, EtherCAT®, Powerlink and Modbus/TCP.
Possibility to connect input modules, even on the base that does not have the Field Bus module. Large use of technopolymer material reduces the overall weight of the manifold.

"Shifting time of pneumatic directional control valves or moving parts, logic devices were measured in accordance to ISO 12238:2001, Pneumatic fluid power-Directional control valves-Measurement of shifting time"

Main characteristics

Integrated and optimized electrical connection system.
IP65 protection degree.
Only one 19mm size
Electrical line connections on one side
Monostable and bistable solenoid valves with the same size dimensions.
Easy and fast manifold assembly - tie rod system to hold the sub bases together
Quick coupling connections directly integrated in sub base
Easy and fast manifold assembling.

Construction characteristics

Body	Technopolymer
Operators	Technopolymer
Spacers	NBR
Spacer	Technopolymer
Spools	Nickel - plated steel / Technopolymer
Springs	AISI 302 stainless steel
Pistons	Technopolymer
Piston seals	NBR

Functions

SV 5/2 MONOSTABLE SOLENOID-SPRING
SV 5/2 MONOSTABLE SOLENOID-DIFFERENTIAL
SV 5/2 BISTABLE SOLENOID-SOLENOID
SV 5/3 C.C. SOLENOID-SOLENOID
SV 2x3/2 N.C.-N.C. (=5/3 O.C.) SOLENOID-SOLENOID
SV 2x3/2 N.O.-N.O. (=5/3 P.C.) SOLENOID-SOLENOID
SV 2x3/2 N.C.-N.O. SOLENOID-SOLENOID

Technical characteristics

Voltage	24VDC ±10% PNP (NPN and AC on request)
Pilot consumption	1,3 Watt
Pilot working pressure (12-14)	From 3 to 7 bar max.
Valve working pressure [1]	from vacuum up to 10 bar
Operating temperature	-5°C +50°C
Protection degree	IP65
Life (standard operating conditions)	50000000
Fluid	Filtered air. No lubrication needed, if applied it shall be continuous

Overall dimensions and technical information are provided solely for informative purposes and may be modified without notice

Solenoid - Spring

Coding: 2541.52.00.39.Ⓥ

Operational characteristics	
Fluid	Filtered air. No lubrication needed, if applied it shall be continuous
Working pressure (bar)	From vacuum to 10
Pressure range (bar)	3 ÷ 7
Temperature °C	-5 ÷ +50
Flow rate at 6 bar with Δp=1 (Nl/min)	750
Responce time according to ISO 12238, activation time (ms)	14
Responce time according to ISO 12238, deactivation time (ms)	40

Shifting time of pneumatic directional control valves or moving parts, logic devices were measured in accordance to ISO 12238:2001

Ⓥ	VOLTAGE
	02 = 24 VDC PNP
	12 = 24 VDC NPN
	05 = 24 VAC

Weight 129 g
SHORT FUNCTION CODE "A"

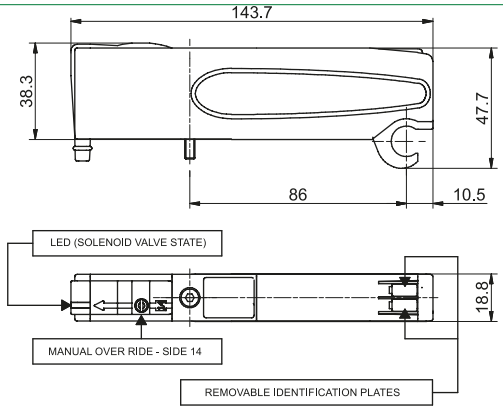

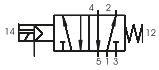

Solenoid-Differential

Coding: 2541.52.00.36.Ⓥ

Operational characteristics	
Fluid	Filtered air. No lubrication needed, if applied it shall be continuous
Working pressure (bar)	From vacuum to 10
Pressure range (bar)	3 ÷ 7
Temperature °C	-5 ÷ +50
Flow rate at 6 bar with Δp=1 (Nl/min)	750
Responce time according to ISO 12238, activation time (ms)	20
Responce time according to ISO 12238, deactivation time (ms)	29

Shifting time of pneumatic directional control valves or moving parts, logic devices were measured in accordance to ISO 12238:2001

Ⓥ	VOLTAGE
	02 = 24 VDC PNP
	12 = 24 VDC NPN
	05 = 24 VAC

Weight 126 g
SHORT FUNCTION CODE "B"

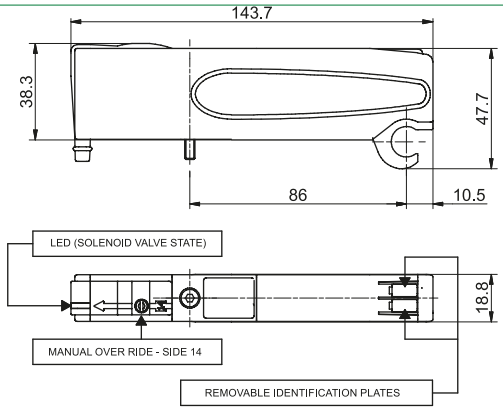

Solenoid-Solenoid

Coding: 2541.52.00.35.Ⓥ

Operational characteristics	
Fluid	Filtered air. No lubrication needed, if applied it shall be continuous
Working pressure (bar)	From vacuum to 10
Pressure range (bar)	3 ÷ 7
Temperature °C	-5 ÷ +50
Flow rate at 6 bar with Δp=1 (Nl/min)	750
Responce time according to ISO 12238, activation time (ms)	10
Responce time according to ISO 12238, deactivation time (ms)	14

Shifting time of pneumatic directional control valves or moving parts, logic devices were measured in accordance to ISO 12238:2001

Ⓥ	VOLTAGE
	02 = 24 VDC PNP
	12 = 24 VDC NPN
	05 = 24 VAC

Weight 134 g
SHORT FUNCTION CODE "C"

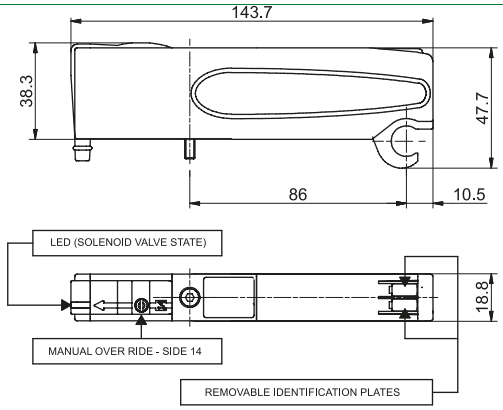

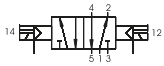

Solenoid-Solenoid 5/3

Coding: 2541.53.31.35.Ⓥ

Operational characteristics	
Fluid	Filtered air. No lubrication needed, if applied it shall be continuous
Working pressure (bar)	From vacuum to 10
Pressure range (bar)	3 ÷ 7
Temperature °C	-5 ÷ +50
Flow rate at 6 bar with Δp=1 (Nl/min)	600
Responce time according to ISO 12238, activation time (ms)	15
Responce time according to ISO 12238, deactivation time (ms)	20

Shifting time of pneumatic directional control valves or moving parts, logic devices were measured in accordance to ISO 12238:2001

Ⓥ	VOLTAGE
	02 = 24 VDC PNP
	12 = 24 VDC NPN
	05 = 24 VAC

Weight 132 g
SHORT FUNCTION CODE "E"

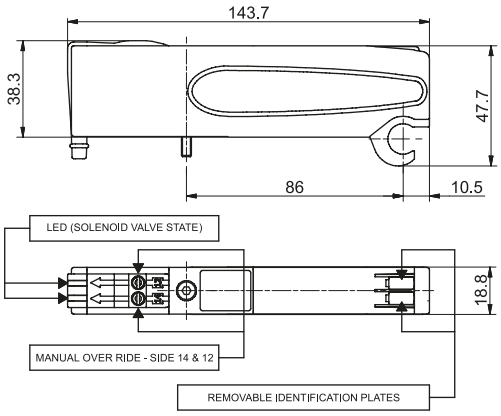

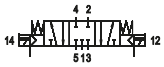

Solenoid-Solenoid 2x3/2

Coding: 2541.62.Ⓕ.35.Ⓥ

Operational characteristics	
Fluid	Filtered air. No lubrication needed, if applied it shall be continuous
Working pressure (bar)	From vacuum to 10
Pressure range (bar)	3 ÷ 7
Temperature °C	-5 ÷ +50
Flow rate at 6 bar with Δp=1 (Nl/min)	700
Responce time according to ISO 12238, activation time (ms)	15
Responce time according to ISO 12238, deactivation time (ms)	25

Shifting time of pneumatic directional control valves or moving parts, logic devices were measured in accordance to ISO 12238:2001

Ⓕ	FUNCTION
	44 = NC-NC (5/3 Open centres)
	55 = NO-NO (5/3 Pressured centres)
	45 = NC-NO (normally closed-normally open)
	54 = NO-NC (normally open-normally closed)

Ⓥ	VOLTAGE
	02 = 24 VDC PNP
	12 = 24 VDC NPN
	05 = 24 VAC

Weight 122 g
"Example: If inlet pressure is set at 5bar then pilot pressure must be at least Pp=2,5+(0.2*5)=3,5bar"

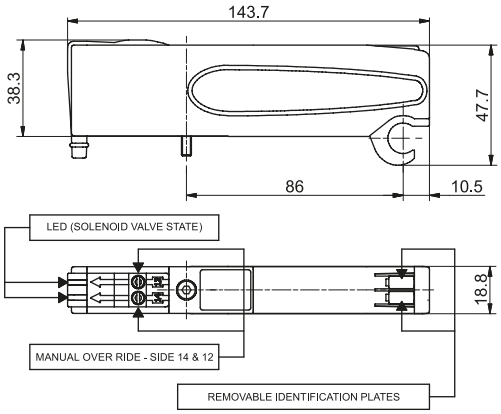

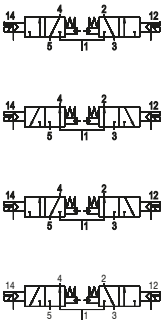

"Example: If inlet pressure is set at 5bar then pilot pressure must be at least Pp=2,5+(0.2*5)=3,5bar"

Overall dimensions and technical information are provided solely for informative purposes and may be modified without notice

Right Endplates

Coding: 2540.03.Ⓒ

Operational characteristics	
Fluid	Filtered air. No lubrication needed, if applied it shall be continuous
Working pressure (bar)	From vacuum to 10
Temperature °C	-5 ÷ +50

Ⓒ	ELECTRICAL CONNECTION
	00 = Electrical connection
	25P = Connectors 25 poles

Conduit 82/84 = DO NOT PRESSURIZE, SOLENOID PILOTS EXHAUST

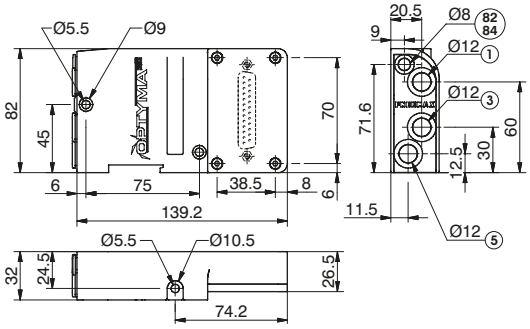

Weight 274 g

Left Endplates

Coding: 2540.Ⓥ.Ⓒ

Operational characteristics	
Fluid	Filtered air. No lubrication needed, if applied it shall be continuous
Working pressure (bar)	From vacuum to 10
Pressure range (bar)	3 ÷ 7
Temperature °C	-5 ÷ +50

Ⓥ	VERSION
	02 = External feeding
	12 = Self-feeding
Ⓒ	ELECTRICAL CONNECTION
	37P = Connectors 37 poles PNP
	25P = Connectors 25 poles PNP
	37N = Connectors 37 poles NPN
	25N = Connectors 25 poles NPN
	37A = Connectors 37 poles AC
	25A = Connectors 25 poles AC

Weight 300 g

2540.02.Ⓒ
Left Endplates-External feeding base: 12/14 divided from conduct 1

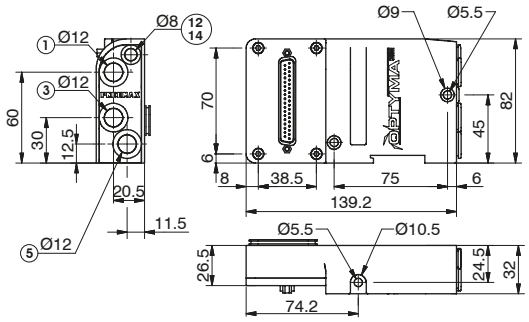

Weight 300 g

2540.12.Ⓒ
Left Endplates - Self-feeding Base: 12/14 connected with conduct 1

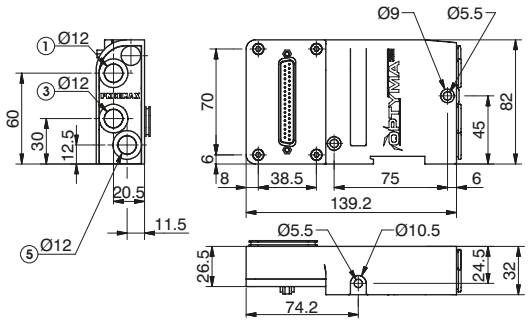

Closing plate

Coding: 2530.00

SHORT FUNCTION CODE "T"

Operational characteristics	
Fluid	Filtered air. No lubrication needed, if applied it shall be continuous
Working pressure (bar)	From vacuum to 10
Temperature °C	-5 ÷ +50

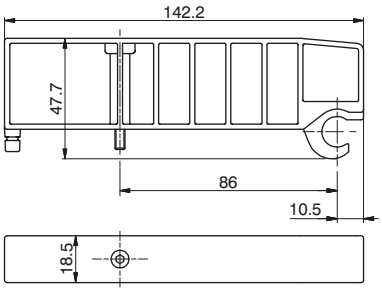

Weight 53,5 g

Modular base

Coding: 254Ⓒ.01Ⓥ

Operational characteristics	
Fluid	Filtered air. No lubrication needed, if applied it shall be continuous
Working pressure (bar)	From vacuum to 10
Temperature °C	-5 ÷ +50

Ⓒ	WORKING PORTS SIZE
	1 = G1/8" female straight cartridge
	4 = Cartridge Ø4
	6 = Quick fitting tube Ø6
	8 = Quick fitting tube Ø8
Ⓥ	VERSION
	M = for Monostable SV
	B = for Bistable SV

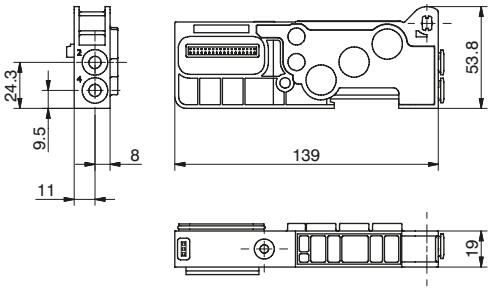

Weight 96,5 g

Intermediate Inlet/Exhaust module

Coding: 2540.10

Operational characteristics	
Fluid	Filtered air. No lubrication needed, if applied it shall be continuous
Working pressure (bar)	From vacuum to 10
Temperature °C	-5 ÷ +50

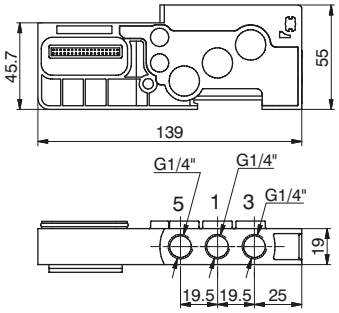

Weight 115 g
SHORT FUNCTION CODE "W"

Nut

Coding: 2540.KD.00

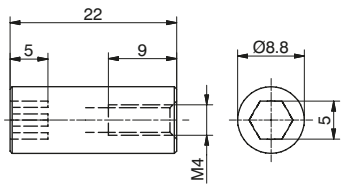

Weight 10 g
The Kit includes 4 pieces

Extension (1 Position)

Coding: 2540.KP.01

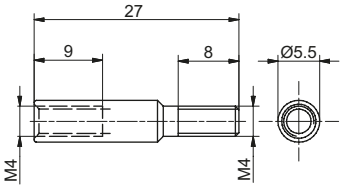

Weight 3,5 g
The Kit includes 2 pieces

Overall dimensions and technical information are provided solely for informative purposes and may be modified without notice

Set with single tie-rod (max. 32 Solenoid valves)

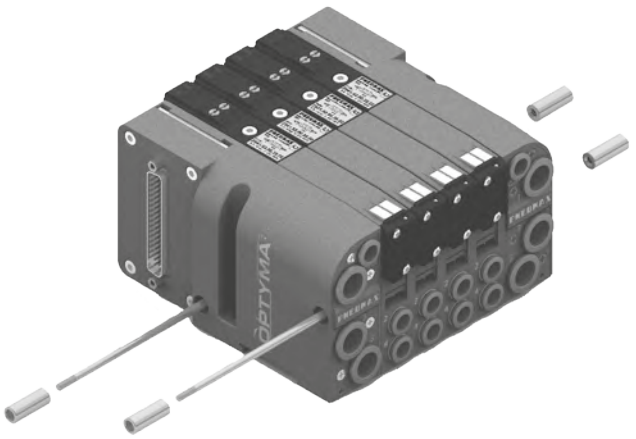

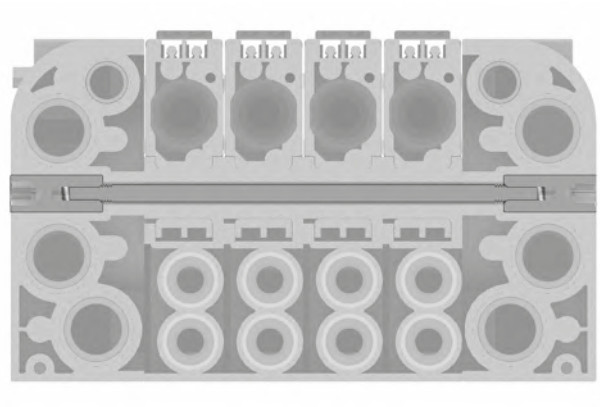

Set with tie-rod, more extension adding a valve

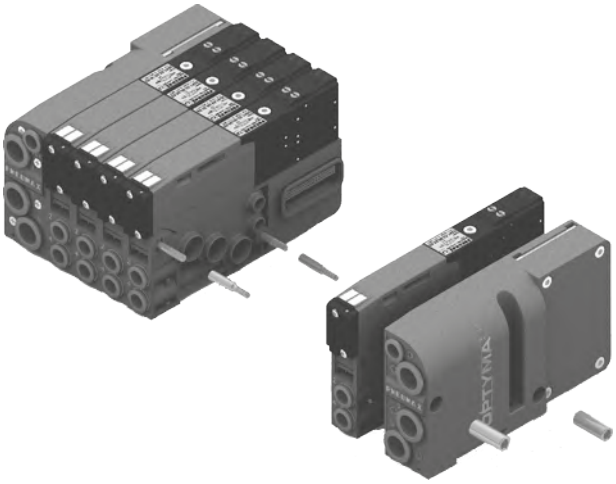

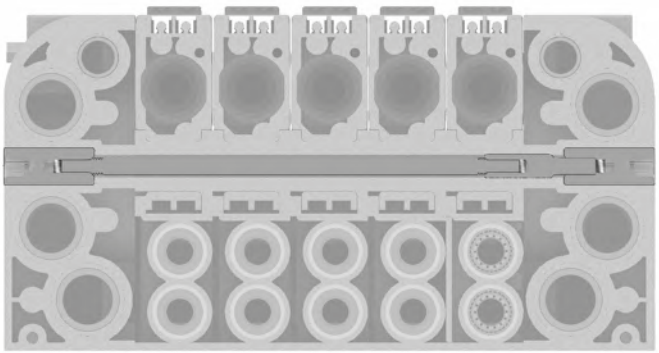

General :

Each Optyma-T manifold lets to manage 32 command signals for the valves.
Optyma-T serial nodes (CANopen®, DeviceNet, PROFIBUS DP, EtherCAT®, PROFINET IO RT, EtherNet/IP and Powerlink) have a single pin for the power supply of the solenoid valves. So if you want to interrupt the power supply of one valve it is necessary to interrupt all the valves. The additional power supply module lets to interrupt at the same time the first 2 available command signals for the valves after the module itself. The additional power supply module is particularly useful also when you use control signals that block the valves. This application is effective both with serial management and multi-pole connection of the manifolds.
This module is inserted directly into the Optyma-T solenoid valves manifold.

Ordering code

2540.10.2A

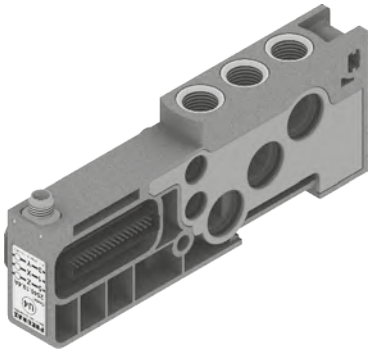

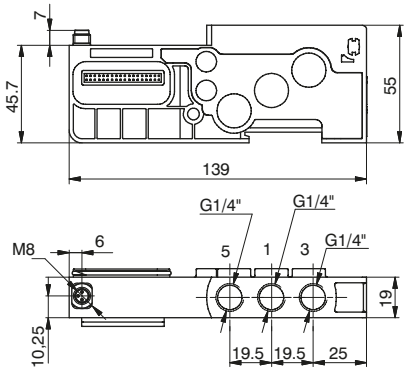

In particular this module is fitted with a M8 3 pins connector:
+24V, not connected, GND.

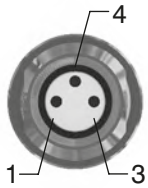

PIN	DESCRIPTION
1	+24 VDC
4	NOT CONNECTED
3	GND

WORKING PRINCIPLE / SIMPLIFIED FUNCTIONAL DIAGRAM

This module uses an external power supply (+24VDC) to manage the solenoid valves.

The output signal from serial node / multi-pole connection is used as command signal: when it is high the +24VDC will be present at the module output.

If you want to cut off the power supply to a group of 2 valves it is sufficient to take away the +24VDC provided to the module by the M8 connector.

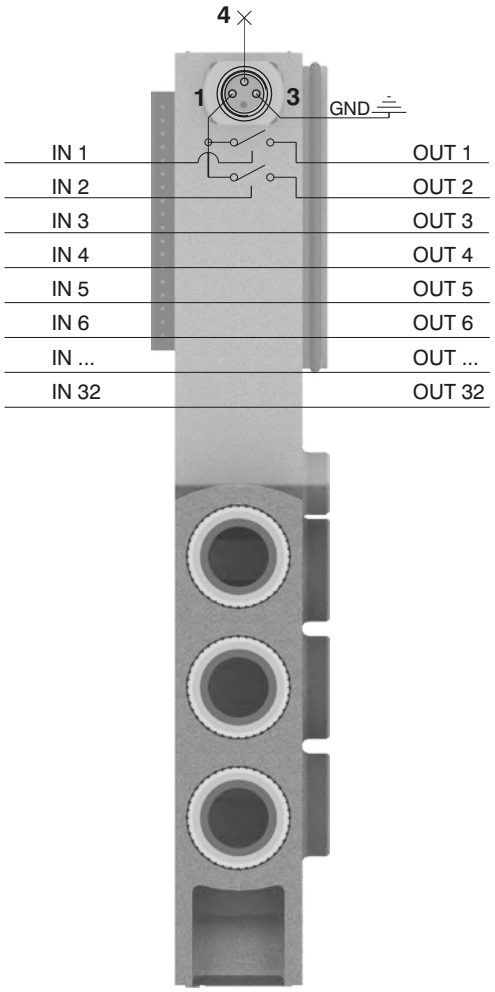

Please note: It is possible to use more modules to interrupt all the command signals, simply by inserting them before the signals to interrupt and after the signals already interrupted.

Overall dimensions and technical information are provided solely for informative purposes and may be modified without notice

Usage examples:

EXAMPLE 1:
Manifold of 12 monostable valves on which you want to interrupt signals 7-8

Assembly:
- 6 monostable valves (not interruptible because before the module),
- 1 additional power supply module,
- 6 monostable valves. Please note: the first 2 monostable of these are interruptible by the module, while the following 4 will work correctly managed directly by the corresponding command signals.

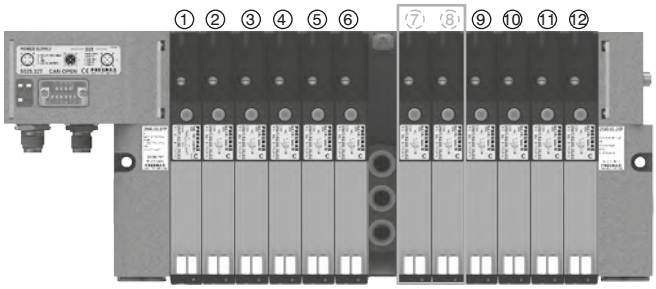

EXAMPLE 2:
Manifold of 12 monostable valves on which you want to interrupt signal 9

Assembly:
- 8 monostable valves (not interruptible because before the module),
- 1 additional power supply module,
- 1 monostable valve (interruptible),
- 1 closing plate mounted on a monostable base,
- 3 monostable valves (work correctly managed directly by the corresponding command signals).

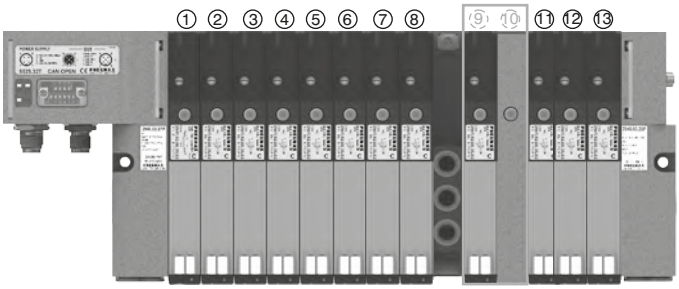

Please note: Each additional power supply module interrupts always 2 electrical signals.
If you need to interrupt less than 2 signals you can:
- assemble the valves to interrupt in the last positions of the manifold, so you don't need to worry about the interrupted exceeding signals;
- use a bistable base and mount a monostable valve (for each signal less than the 2 standard);
- use a monostable base and mount a closing plate (for each signal less than the 2 standard).

EXAMPLE 3:
Manifold of 7 monostable e 3 bistable valves on which you want to interrupt signals 2-3 and 8-9.

Assembly:
- 1 monostable valve (not interruptible because before the module),
- 1 additional power supply module,
- 6 monostable valves.
Please note: the first 2 monostable of these are interruptible by the module, while the following 4 will work correctly managed directly by the corresponding command signals.
- 1 additional power supply module,
- 3 bistable valves.
Please note: the first bistable of these valves is interruptible by the module, while the following 2 will work correctly managed directly by the corresponding command signals.

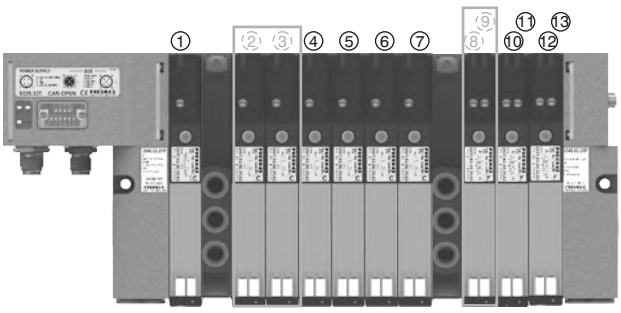

General :

Each Optyma-T manifold lets to manage 32 command signals for the valves.
Optyma-T serial nodes (CANopen®, DeviceNet, PROFIBUS DP, EtherCAT®, PROFINET IO RT, EtherNet/IP and Powerlink) have a single pin for the power supply of the solenoid valves. So if you want to interrupt the power supply of one valve it is necessary to interrupt all the valves.
The additional power supply module lets to interrupt at the same time the first 4 available command signals for the valves after the module itself. The additional power supply module is particularly useful also when you use control signals that block the valves. This application is effective both with serial management and multi-pole connection of the manifolds.
This module is inserted directly into the Optyma-T solenoid valves manifold.

Ordering code

2540.10.4A

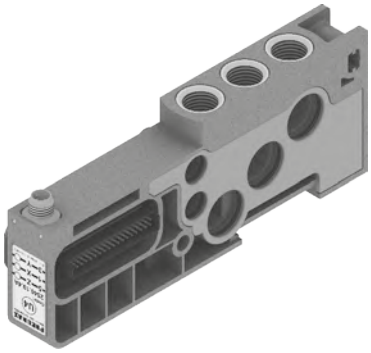

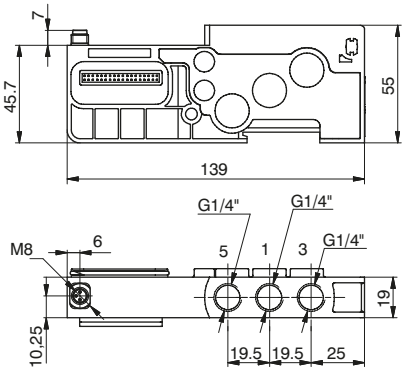

In particular this module is fitted with a M8 3 pins connector:
+24V, not connected, GND.

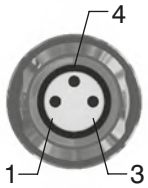

PIN	DESCRIPTION
1	+24 VDC
4	NOT CONNECTED
3	GND

WORKING PRINCIPLE / SIMPLIFIED FUNCTIONAL DIAGRAM

This module uses an external power supply (+24VDC) to manage the solenoid valves.

The output signal from serial node / multi-pole connection is used as command signal: when it is high the +24VDC will be present at the module output.

If you want to cut off the power supply to a group of 4 valves it is sufficient to take away the +24VDC provided to the module by the M8 connector.

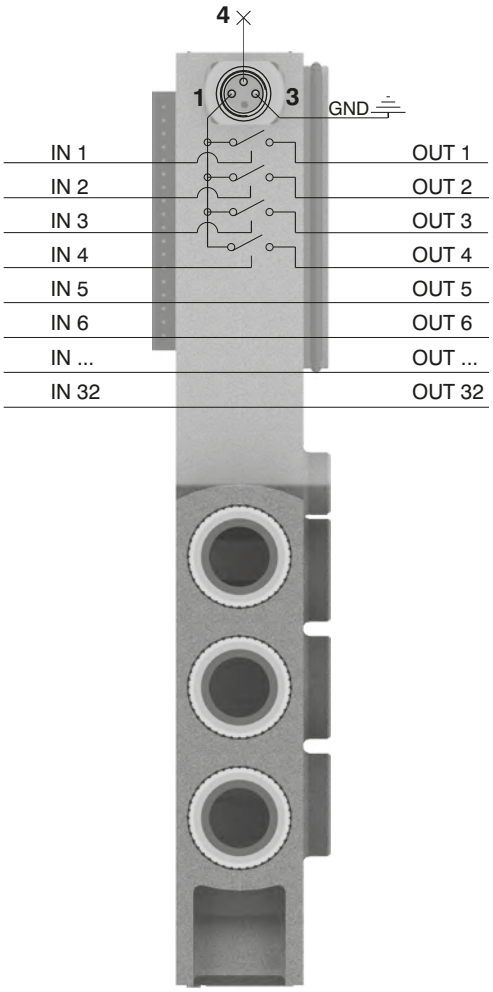

Please note: It is possible to use more modules to interrupt all the command signals, simply by inserting them before the signals to interrupt and after the signals already interrupted.

Overall dimensions and technical information are provided solely for informative purposes and may be modified without notice

Usage examples:

EXAMPLE 1:
Manifold of 12 monostable valves on which you want to interrupt signals 7-8-9-10

Assembly:
- 6 monostable valves (not interruptible because before the module),
- 1 additional power supply module,
- 6 monostable valves. Please note: the first 4 monostable of these are interruptible by the module, while the following 2 will work correctly managed directly by the corresponding command signals.

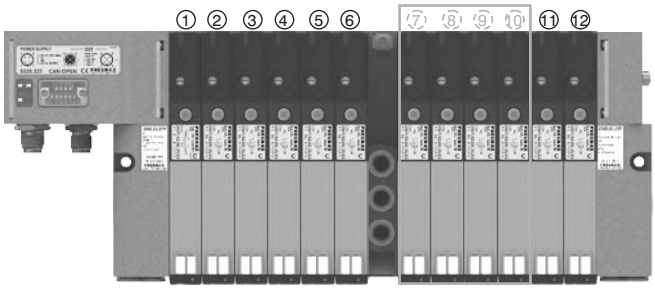

EXAMPLE 2:
Manifold of 12 monostable valves on which you want to interrupt signals 7-8-9

Assembly:
- 6 monostable valves (not interruptible because before the module),
- 1 additional power supply module,
- 3 monostable valves (interruptible),
- 1 closing plate mounted on a monostable base,
- 3 monostable valves (work correctly managed directly by the corresponding command signals).

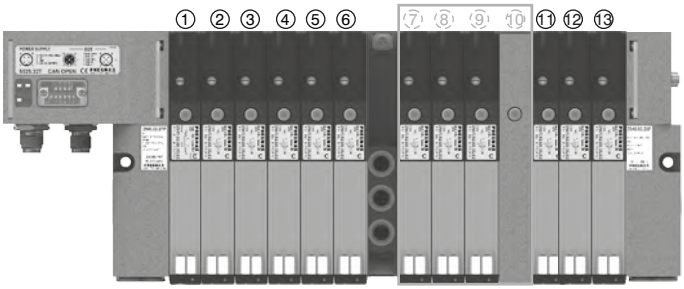

Please note: Each additional power supply module interrupts always 4 electrical signals.
If you need to interrupt less than 4 signals you can:
- assemble the valves to interrupt in the last positions of the manifold, so you don't need to worry about the interrupted exceeding signals;
- use a bistable base and mount a monostable valve (for each signal less than the 4 standard);
- use a monostable base and mount a closing plate (for each signal less than the 4 standard).

EXAMPLE 3:
Manifold of 7 monostable e 3 bistable valves on which you want to interrupt signals 2-3-4-5 and 8-9-10-11.

Assembly:
- 1 monostable valve (not interruptible because before the module),
- 1 additional power supply module,
- 6 monostable valves.
Please note: the first 4 monostable of these are interruptible by the module, while the following 2 will work correctly managed directly by the corresponding command signals.
- 1 additional power supply module,
- 3 bistable valves.
Please note: the first 2 bistable of these valves are interruptible by the module, while the following will work correctly managed directly by the corresponding command signals.

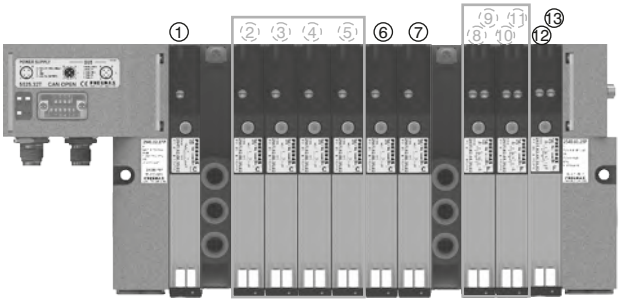

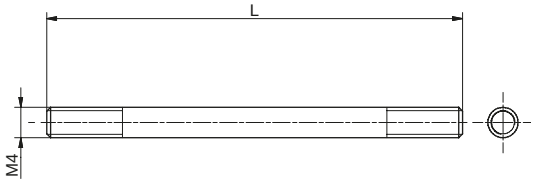

Coding: 2540.KT.Ⓟ

	N. POSITIONS
Ⓟ	**01** = Nr. 1 Position
	02 = Nr. 2 Positions
	03 = Nr. 3 positions
	04 = Nr. 4 Positions
	05 = Nr. 5 positions
	06 = Nr. 6 Positions
	07 = Nr. 7 positions
	08 = Nr. 8 Positions
	09 = Nr. 9 positions
	10 = Nr. 10 Positions
	11 = Nr. 11 positions
	12 = Nr. 12 Positions
	13 = Nr. 13 positions
	14 = Nr. 14 Positions
	...
	32 = Nr. 32 Positions

Polyethylene Silencer Series SPL-R

Coding: SPLR.Ⓓ

	TUBE DIAMETER
Ⓓ	**8** = 8 mm
	12 = 12 mm

Diaphragm plug

Coding: 2530.17

Cable complete with connector, 25 Poles IP65

Coding: 2300.25.Ⓛ.Ⓒ

	CABLE LENGTH
Ⓛ	**03** = 3 meters
	05 = 5 meters
	10 = 10 meters
	FUNCTION
Ⓕ	**31** = Closed centres
	32 = Open centres
	33 = Pressured centres

Cable complete with connector, 37 Poles IP65

Coding: 2400.37.Ⓛ.Ⓒ

	CABLE LENGTH
Ⓛ	**03** = 3 meters
	05 = 5 meters
	10 = 10 meters
	FUNCTION
Ⓕ	**31** = Closed centres
	32 = Open centres
	33 = Pressured centres

Cable complete with connector, 25 Poles IP65

Coding: 2400.25.Ⓛ.25

	CABLE LENGTH
Ⓛ	**03** = 3 meters
	05 = 5 meters
	10 = 10 meters

Overall dimensions and technical information are provided solely for informative purposes and may be modified without notice

The electrical connection is achieved by a 37 pin connector and can manage up to 32 solenoid pilots.
It is also possible use a 25 sub-D pin connector and, in this case, it is possible to manage a maximum of 22 outputs.
The management and distribution of the electrical signals between each valve is obtained thanks to an electrical connector which receives the signals from the previous module, uses one, two or none depending on the type, and carries forward to the next module the remaining.
Bistable valves, 5/3 and 2x3/2 valves which have two solenoid pilots built in, use two signals; the first is directed to the pilot side 14 the second to the pilot side 12. Modular bases can be fitted with two type of electrical connector: the monostable version uses only one signal (connected to the pilot side 14) and carries forward the remaining, the bistable version which always uses two signals.
This solution allows the modification of the manifold (replacement of monostable valves without bistable for example) without having to reset the PLC output layout.
On other hand this solution limits the maximum number of valves to 16 when it is used a 37 pin connector or 11 when it is used a 25 pin connector.
Intermediate supply/exhaust module uses an electrical connector directly forwarding signals to the next one without any kind of modification.
This allows the use of intermediate modules in any position of the manifold.
All the electrical signals that have not been used on the manifold can be used placing at the end of the manifold the end plate complete with the 25 sub-D female connector.
The number of available signals depends of the connector used to the type of the left end plate and by the total signals used along the manifold:

37 pin connector nr of output = 32 – (total of used signals)
25 pin connector nr of output = 22 – (total of used signals)

Following we show some examples of possible combination and the relative pin assignment.

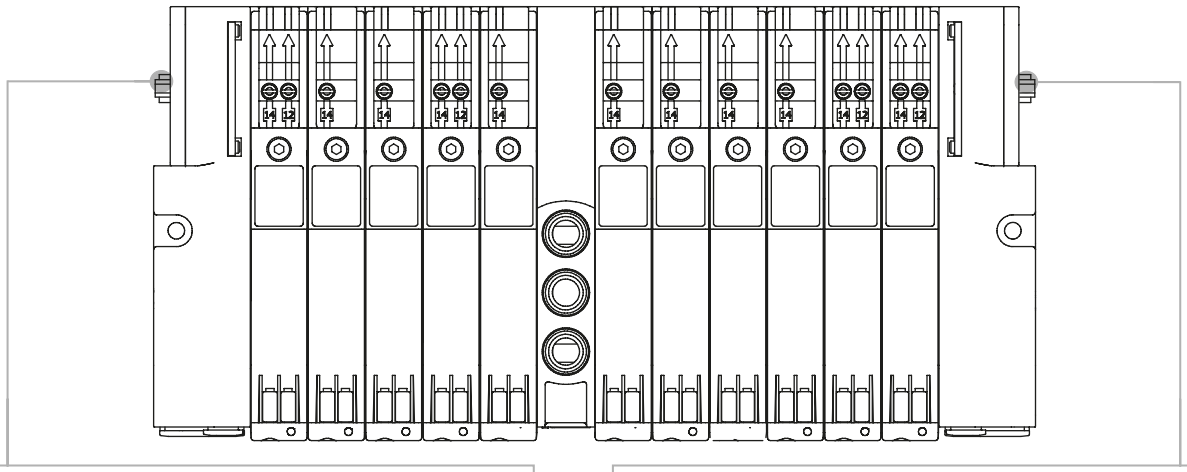

IN-LET ELECTRIC CONNECTIONS

SUB-D 37 POLE
MALE CONNECTOR

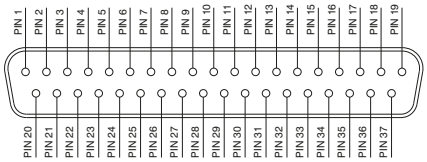

1 - 32 = SOLENOID VALVES SIGNAL
33 - 35 = GND
36 - 37 = THROUGH LINE

SUB-D 25 POLE
MALE CONNECTOR

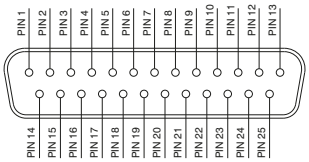

1 - 22 = SOLENOID VALVES SIGNAL
23 - 24 = GND
25 = THROUGH LINE

OUTLET ELECTRIC CONNECTIONS (IF PRESENT)

SUB-D 25 POLE
FEMALE CONNECTOR

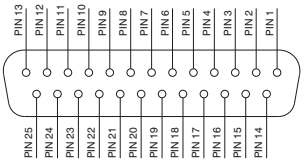

1 - 22 = SOLENOID VALVES SIGNAL
23 - 24 = GND
25 = THROUGH

37 PIN Connector correspondence for valves assembled on mixed bases

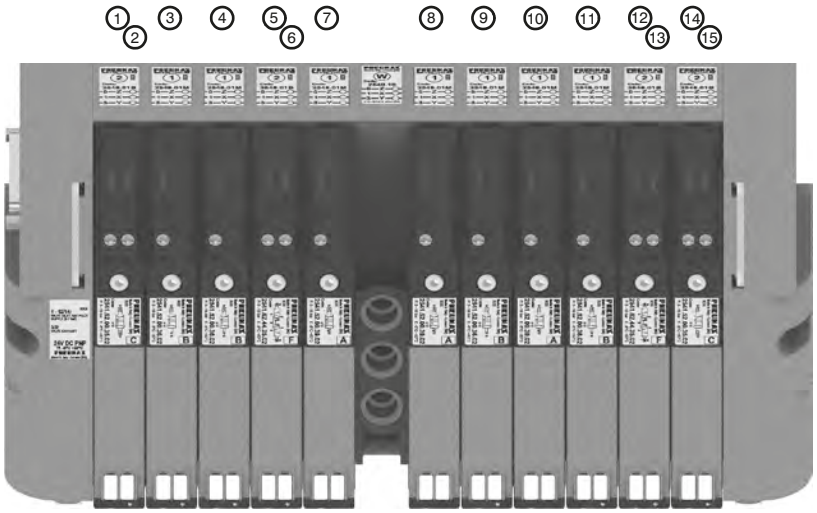

POS.	1	2	3	4	5	6	7	8	9	10	11	12

PIN 1 = PILOT 14 SV POS.1
PIN 2 = PILOT 12 SV POS.1
PIN 3 = PILOT 14 SV POS.2
PIN 4 = PILOT 14 SV POS.3
PIN 5 = PILOT 14 SV POS.4
PIN 6 = PILOT 12 SV POS.4
PIN 7 = PILOT 14 SV POS.5
PIN 8 = PILOT 14 SV POS.7
PIN 9 = PILOT 14 SV POS.8
PIN 10 = PILOT 14 SV POS.9
PIN 11 = PILOT 14 SV POS.10
PIN 12 = PILOT 14 SV POS.11
PIN 13 = PILOT 12 SV POS.11
PIN 14 = PILOT 14 SV POS.12
PIN 15 = PILOT 12 SV POS.12

37 PIN Connector correspondence for manifold mounted on bases for bistable valves

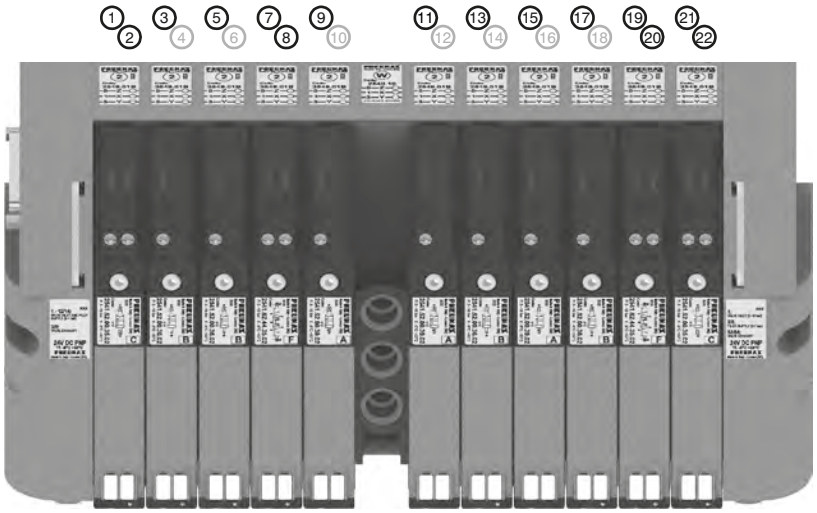

POS.	1	2	3	4	5	6	7	8	9	10	11	12

PIN 1 = PILOT 14 S POS.1
PIN 2 = PILOT 12 SV POS.1
PIN 3 = PILOT 14 SV POS.2
PIN 4 = NOT CONNECTED
PIN 5 = PILOT 14 SV POS.3
PIN 6 = NOT CONNECTED
PIN 7 = PILOT 14 SV POS.4
PIN 8 = PILOT 12 SV POS.4
PIN 9 = PILOT 14 SV POS.5
PIN 10 = NOT CONNECTED
PIN 11 = PILOT 14 SV POS.7
PIN 12 = NOT CONNECTED
PIN 13 = PILOT 14 SV POS.8
PIN 14 = NOT CONNECTED
PIN 15 = PILOT 14 SV POS.9
PIN 16 = NOT CONNECTED
PIN 17 = PILOT 14 SV POS.10
PIN 18 = NOT CONNECTED
PIN 19 = PILOT 14 SV POS.11
PIN 20 = PILOT 12 SV POS.11
PIN 21 = PILOT 14 SV POS.12
PIN 22 = PILOT 12 SV POS.12

37 PIN Connector correspondence for manifold for 32 position manifold with monostable valves on base

37P

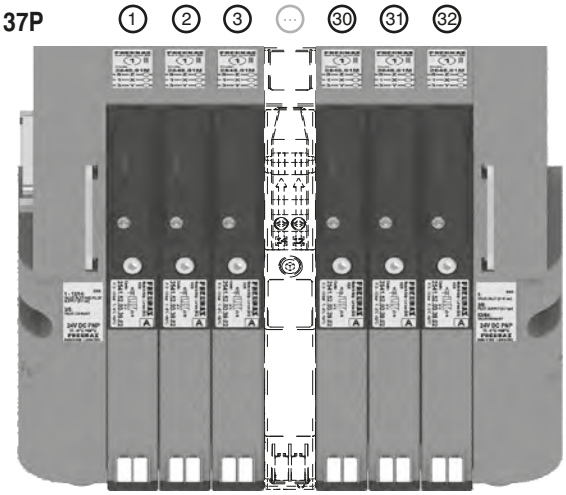

POS.	1	2	3	...	30	31	32

25P

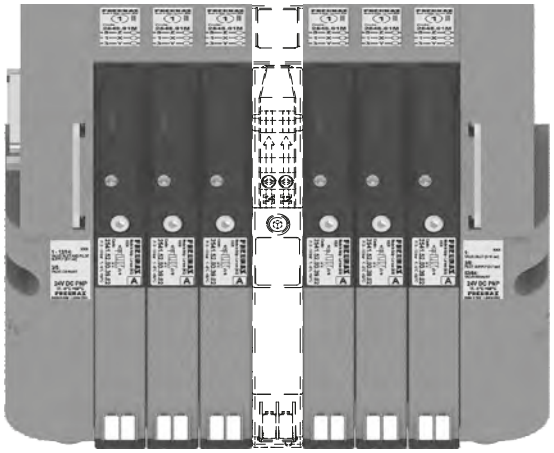

POS.	1	2	3	...	20	21	22

Overall dimensions and technical information are provided solely for informative purposes and may be modified without notice

General :

Using the 2540.03.25P output terminal it is possible to make any electrical signals not used by valves available on a 25 sub-D female connector at the right end of the manifold.
It is possible to then join a multi-core cable to link to the next manifold, or connect directly to one or two I/O modules.
The I/O modules can accept input or output signals, depending upon what is connected.

Ordering code

2540.08T

Please note: If the manifold is connected by a multi-core connection, each connection can be used as either an input or an output, while if the manifold is connected to a serial node the connections can only be used as an output.

It is possible to connect the manifold to up to two I/O modules.

Each I/O module includes 8 diagnostic LEDs which indicate the presence of an Input / Output signal for each connector.

Please note: For an LED to function, a signal of at least +15VDC must be present on pin 4 of the connector. If this signal is lower, the LED will not light, this does not compromise the normal Input / Output function of the unit.

Overall dimensions and I/O layout :

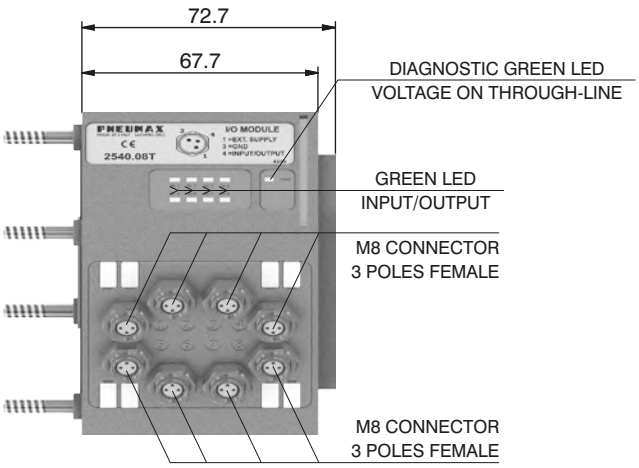

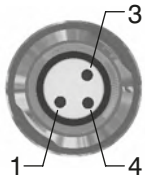

PIN	DESCRIPTION
1	+24 VDC
4	INPUT/OUTPUT
3	GND

Input features:

Each connection can accept either two wire (switches, magnetic switches, pressure switches, etc.) or three wire connections (photocells, electronic end of stroke sensors, etc.) If +24VDC is required on at Pin 1 of each connector, it is possible to provide this via the through-line pin of the multi-pole connector.
I.E :
Pin 25 of the 25 pin multi-pole connector (code 2540.02.25P or 2540.12.25P)
Pin 36-37 of the 37 pin multi-pole connector (code 2540.02.37P or 2540.12.37P)

Output features:

Attention: The output connections are not protected against short-circuit. Please pay attention when wiring (avoid Pin 4 being connected to Pin 3 or Pin 1).

	Model	2540.08T
	Case	Reinforced technopolymer
General characteristics	I/O Connector	M8 connector 3 poles female (IEC 60947-5-2)
	PIN 1 voltage (connector used as Input)	By the user
	PIN 4 voltage diagnosis	Green Led
	Node consumption (Outlets excluded)	7mA per each LED with 24 VDC signal
	Outlets voltage	+23,3 VDC (serial) /by the user (multipolar)
	Input voltage	Depend by the using
	Maximum outlet current	100 mA (serial) / 400 mA (multipolar)
	Maximum Input/Output	8 per module
	Multiconnector max. Current	100 mA
	Connections to manifold	Direct connection to 25 poles connector
	Maximum n. of moduls	2
	Protection degree	IP65 when assembled
	Ambient temperature	from -0° to +50° C

CORRESPONDENCE BETWEEN MULTI-POLE SIGNAL AND CONNECTOR

SUB-D TYPE 37 POLE MALE CONNECTOR

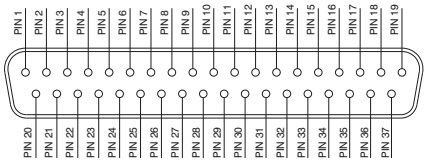

1 - 32 = SIGNALS
33 - 35 = GND
36 - 37 = THROUGH LINE

SUB-D TYPE 25 POLE MALE CONNECTOR

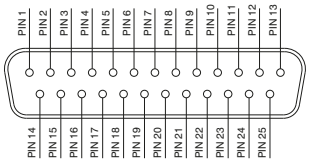

1 - 22 = SIGNALS
23 - 24 = GND
25 = THROUGH LINE

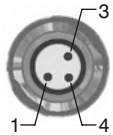

PIN	DESCRIPTION
1	THROUGH LINE
4	SIGNAL
3	GND

Connection modes:

The I/O module changes it is operation depending on the way the manifold is controlled. There are two possible modes:

A) Control via multi-pole connection
B) Control via fieldbus

In order to use the I/O module, the correct right hand endplate with 25 pole female outlet connector must be used.
(Code 2540.03.25P).

A) Control via multi-pole :

M8 connector used as Input:

Attention: Voltage applied to each connector is passed to multi-pole connector pin.

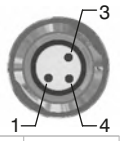

PIN	DESCRIPTION
1	THROUGH LINE
4	SIGNAL
3	GND

M8 connector used as Output:

Output voltage will the same as is applied at the multi-pole connector pin.
The maximum output current depends upon the power unit used, but we recommend no more than 250mA.

Attention: Since every cable has a degree of resistance, there will always be a voltage drop depending on the cable's length, sectional area and the current.

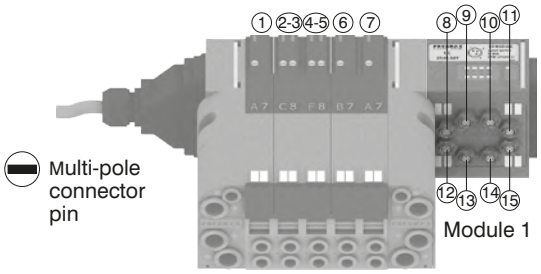

Attention: Only one more I/O module can be added.

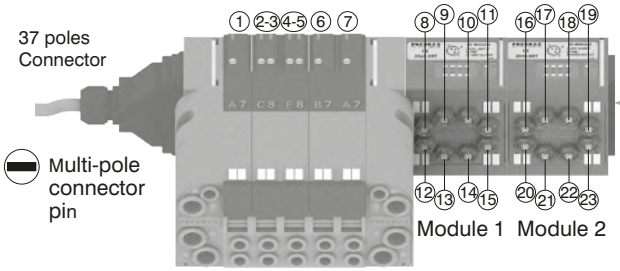

Attention: No more additions are possible

Attention : Optyma 32-T solenoid valve manifolds permit up to 22 electrical signals that are not used by manifolds to be made available: these signals can be managed by another manifold and / or by I/O modules.
The I/O module will manage these unused signals. Connections that are not managing useful signals will remain unconnected.

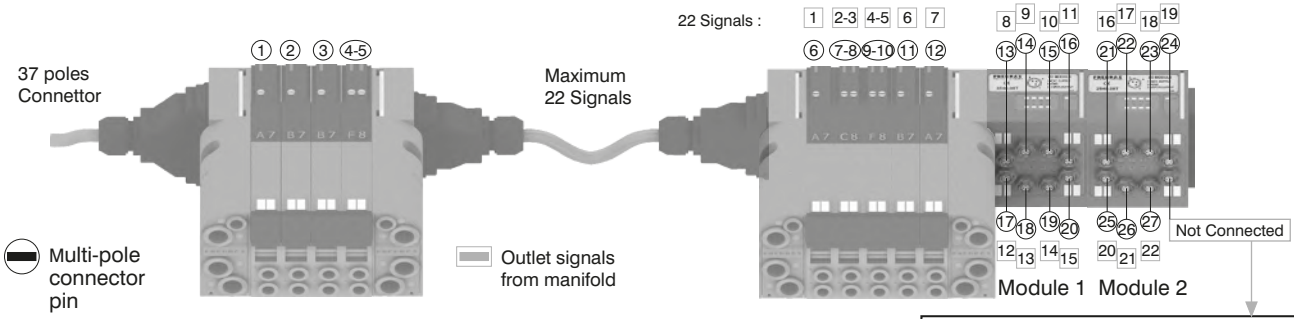

Please note: this example considers a 37 pin multi-pole connector.
The same configuration managed by a 25 pin multi-pole connector will stop at number 22 of multi-pole connector and at number 17 of the manifold. 22 17

Attention:
Signal Not connected
GND Connected
Through line Connected

Overall dimensions and technical information are provided solely for informative purposes and may be modified without notice

Please note: Optyma 32-T solenoid valve manifolds manage up to 32 signals. If the manifold uses more than 24 signals the I/O module will manage only the remainder. Connections that are not managing useful signals will remain unconnected.

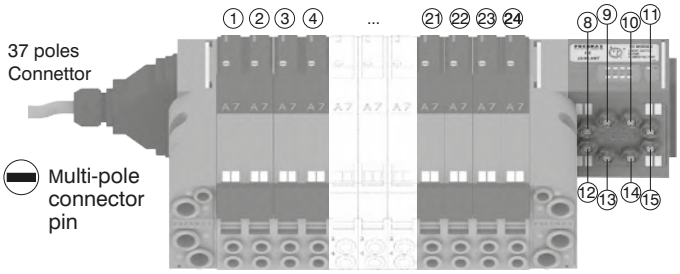

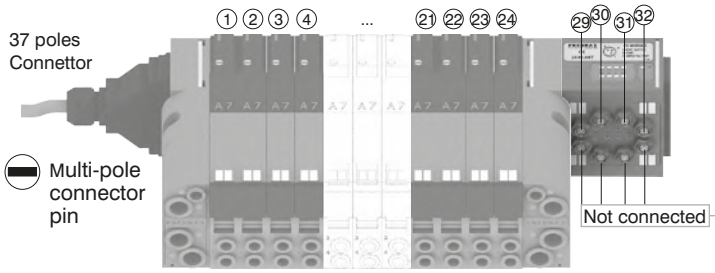

Attention:
Signal Not connected
GND Connected
Through line Connected

B) Control via fieldbus:

With this kind of control the I/O module can only be used as an output. Pin 1 of each connector is not connected. The output voltage will be 0.7V lower than that applied to Pin 4 of the connector.
The maximum output current for each output is 100mA. The correspondence between control byte and each single output depends on how many electrical signals are used by the manifold and by the relative position of the I/O module.

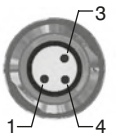

PIN	DESCRIPTION
1	NOT CONNECTED
4	SIGNAL
3	GND

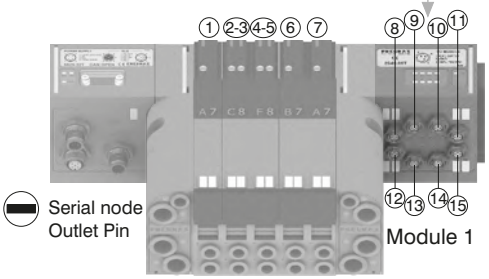

Attention:
Output only

Attention:
Only one more
I/O module
can be added.

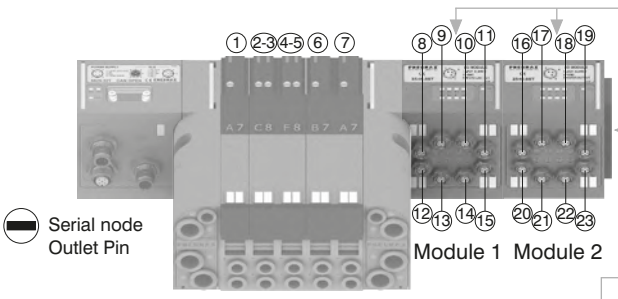

Attention:
Output only

Attention:
No more additions
are possible

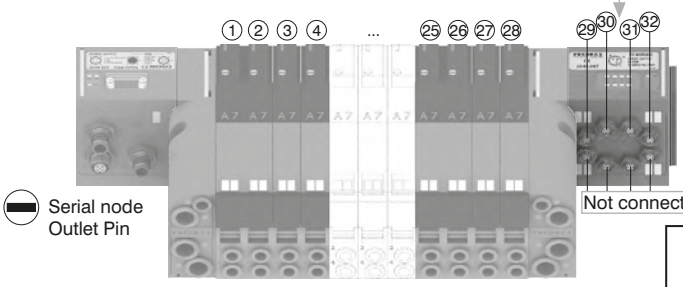

Attention:
Output only

Attention:
Signal Not connected
GND Connected

Please note: I/O modules don't allow to connect any additional valves manifold after them.

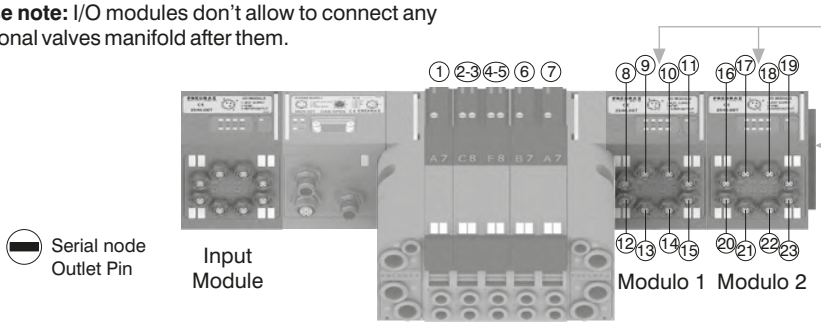

Attention:
Output only

Attention:
No more additions
are possible

From the top

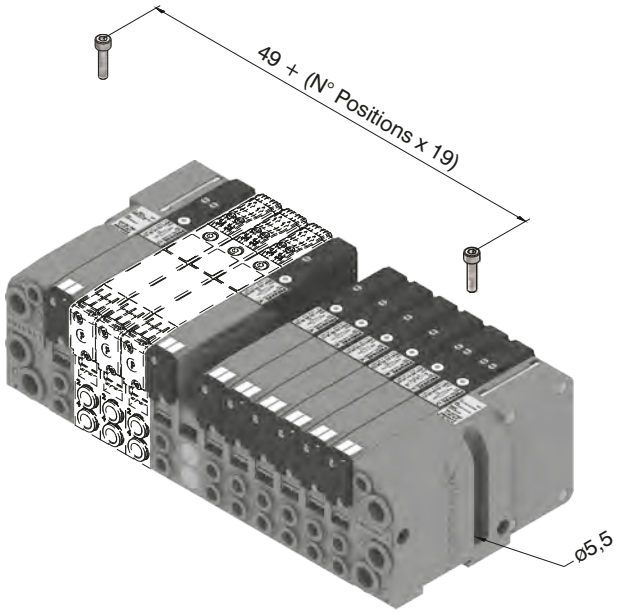

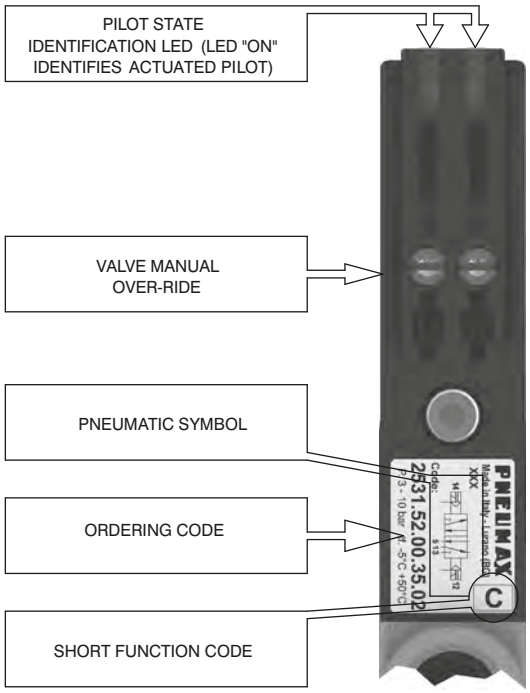

DIN rail fixing

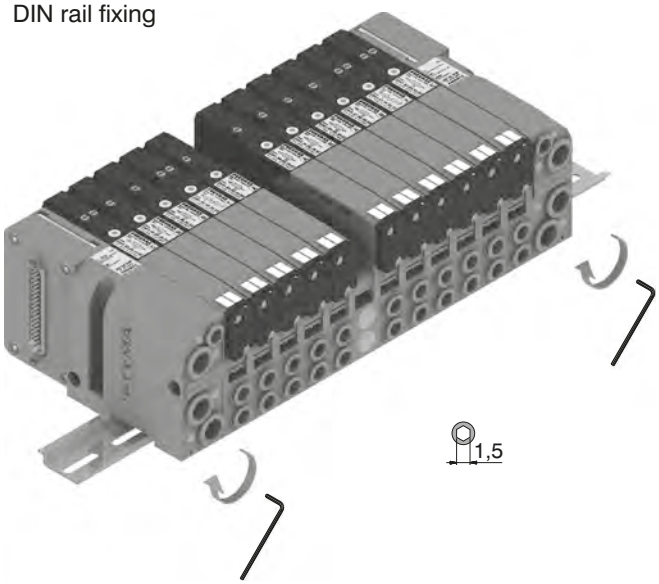

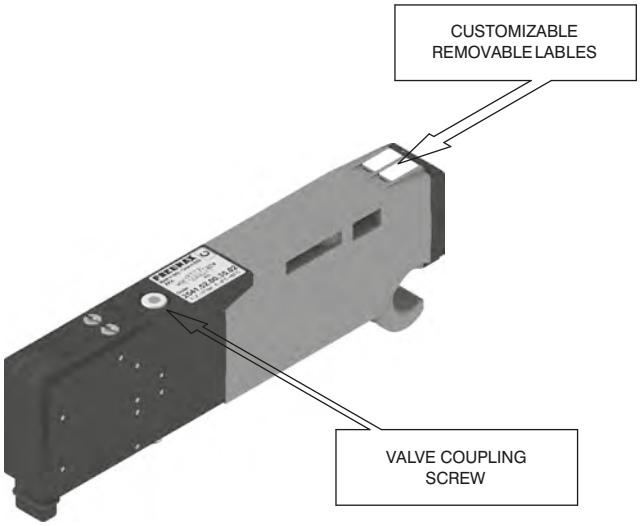

Maximum possible size
according to valves seats

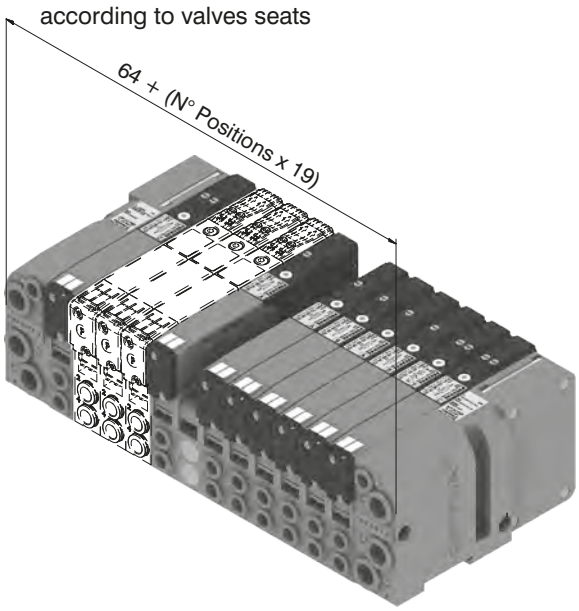

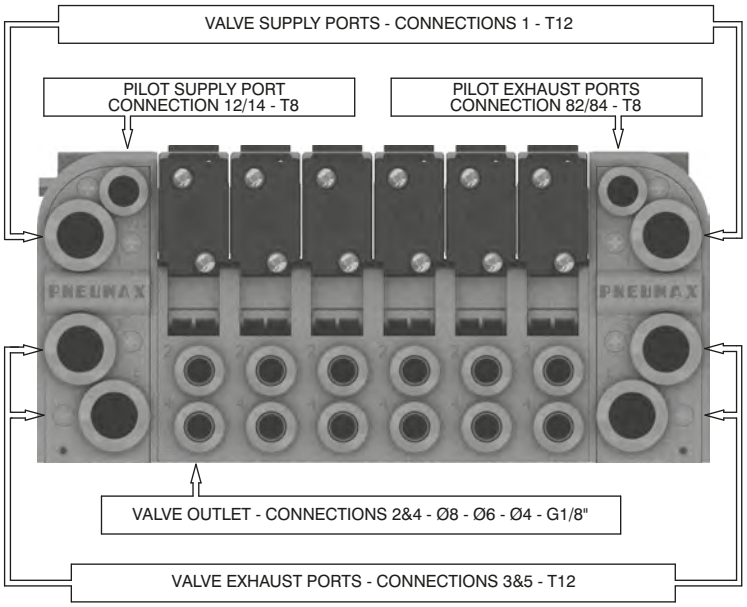

Overall dimensions and technical information are provided solely for informative purposes and may be modified without notice

Manual override actuation

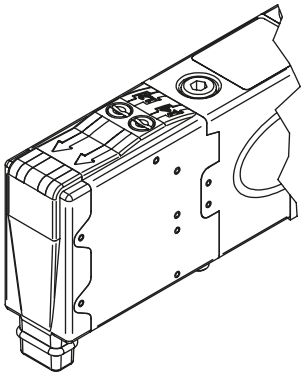

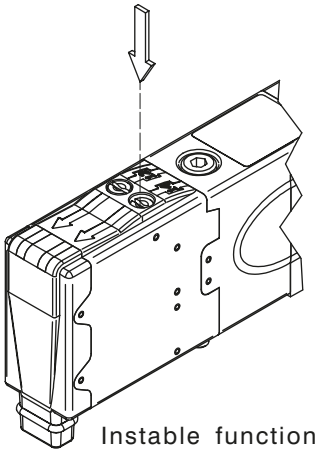

Instable function: push to actuate (when released it moves back to the original position).

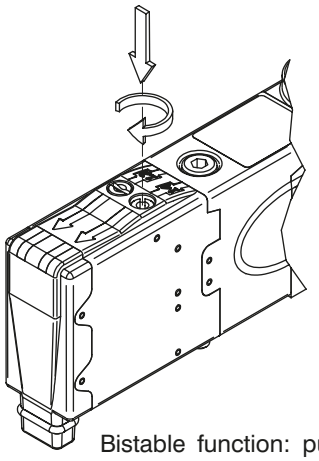

Bistable function: push and turn to get the bistable function

NOTE : It is strongly suggested to replace the original position after using

Valve Installation

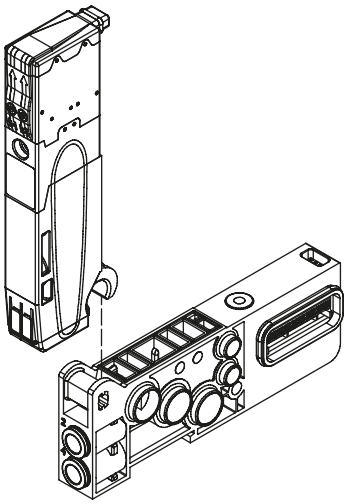

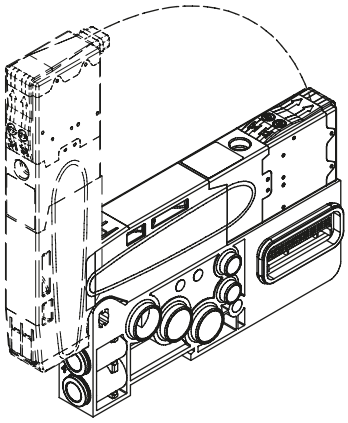

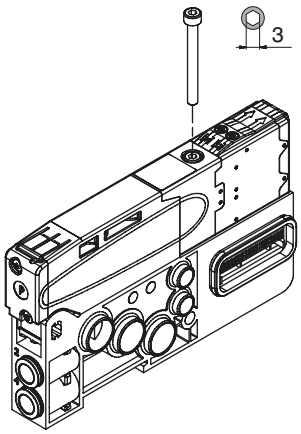

NOTE: Torque moment 1 Nm

Manifold assembly

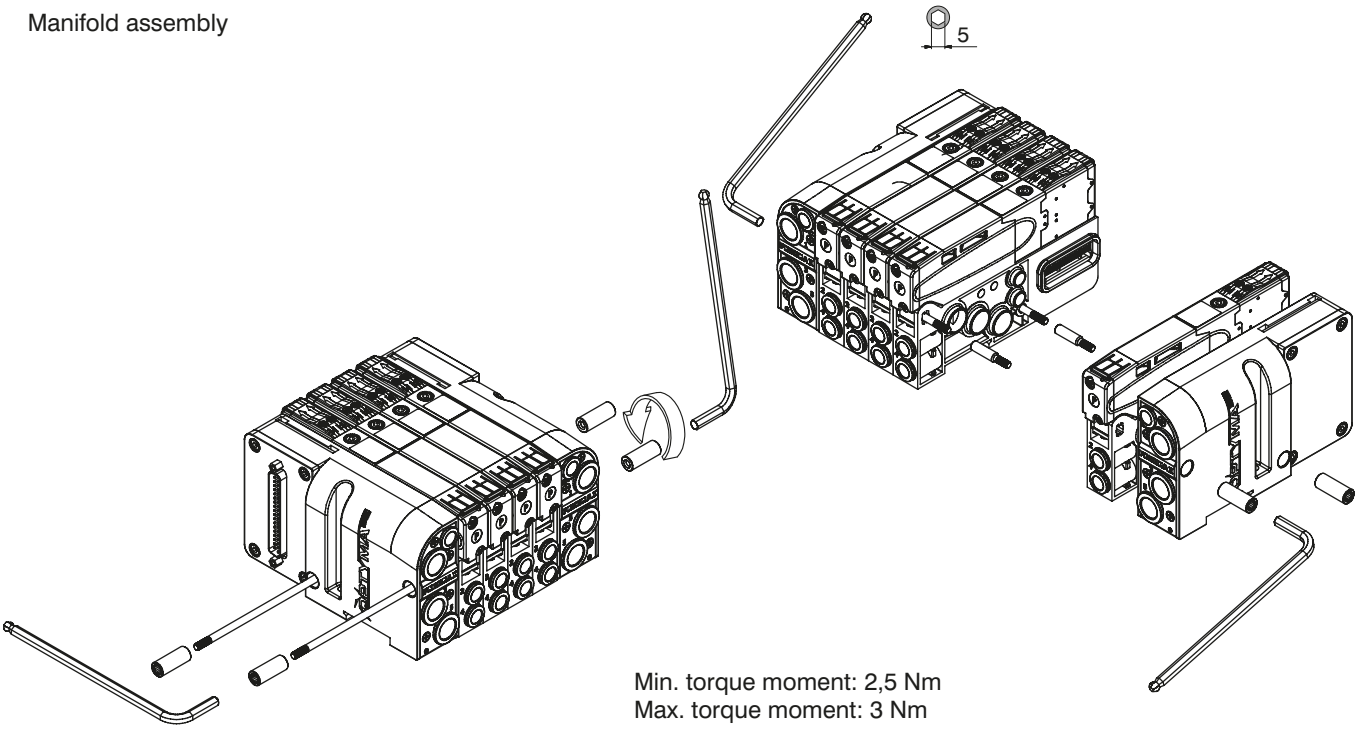

Min. torque moment: 2,5 Nm
Max. torque moment: 3 Nm

Manifold Layout configuration

MULTIPOINT CONNECTION

MP = PNP 24 V DC
MN = NPN 24 V DC
MA = 24 V AC

LEFT ENDPLATE

A2 = 25 poles - Self feeding
A3 = 37 poles - Self feeding
E2 = 25 poles - External feeding
E3 = 37 poles - External feeding

RIGHT ENDPLATE

U0 = Closed
U2 = 25 Poles
U3 = 37 Poles

I/O MODULE

M8
(Requires 25 poles right endplate)

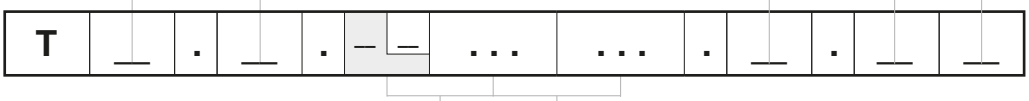

MODUL CONFIGURATION

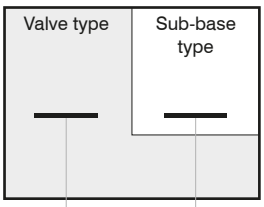

ACCESSORIES CONFIGURATION

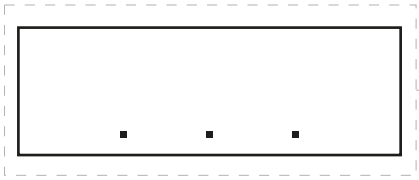

SHORT CODE FUNCTION / CONNECTION :

A1= 5/2 Sol.-Spring + BASE 1 - CARTR. G1/8" GAS
A2= 5/2 Sol.-Spring + BASE 2 - CARTR. G1/8" GAS
A3= 5/2 Sol.-Spring + BASE 1 - CARTR. Ø4
A4= 5/2 Sol.-Spring + BASE 2 - CARTR. Ø4
A5= 5/2 Sol.-Spring + BASE 1 - CARTR. Ø6
A6= 5/2 Sol.-Spring + BASE 2 - CARTR. Ø6
A7= 5/2 Sol.-Spring + BASE 1 - CARTR. Ø8
A8= 5/2 Sol.-Spring + BASE 2 - CARTR. Ø8
B1= 5/2 Sol.-Diff. + BASE 1 - CARTR. G1/8" GAS
B2= 5/2 Sol.-Diff. + BASE 2 - CARTR. G1/8" GAS
B3= 5/2 Sol.-Diff. + BASE 1 - CARTR. Ø4
B4= 5/2 Sol.-Diff. + BASE 2 - CARTR. Ø4
B5= 5/2 Sol.-Diff. + BASE 1 - CARTR. Ø6
B6= 5/2 Sol.-Diff. + BASE 2 - CARTR. Ø6
B7= 5/2 Sol.-Diff. + BASE 1 - CARTR. Ø8
B8= 5/2 Sol.-Diff. + BASE 2 - CARTR. Ø8
C2= 5/2 Sol.-Sol. + BASE 2 - CARTR. G1/8" GAS
C4= 5/2 Sol.-Sol. + BASE 2 - CARTR. Ø4
C6= 5/2 Sol.-Sol. + BASE 2 - CARTR. Ø6
C8= 5/2 Sol.-Sol. + BASE 2 - CARTR. Ø8
E2= 5/3 CC Sol.-Sol. + BASE 2 - CARTR. G1/8" GAS
E4= 5/3 CC Sol.-Sol. + BASE 2 - CARTR. Ø4
E6= 5/3 CC Sol.-Sol. + BASE 2 - CARTR. Ø6
E8= 5/3 CC Sol.-Sol. + BASE 2 - CARTR. Ø8
F2= 2x3/2 NC-NC (= 5/3 OC) Sol.-Sol. + BASE 2 - CARTR. G1/8" GAS
F4= 2x3/2 NC-NC (= 5/3 OC) Sol.-Sol. + BASE 2 - CARTR. Ø4
F6= 2x3/2 NC-NC (= 5/3 OC) Sol.-Sol. + BASE 2 - CARTR. Ø6
F8= 2x3/2 NC-NC (= 5/3 OC) Sol.-Sol. + BASE 2 - CARTR. Ø8
G2= 2x3/2 NO-NO (= 5/3 PC) Sol.-Sol. + BASE 2 - CARTR. G1/8" GAS
G4= 2x3/2 NO-NO (= 5/3 PC) Sol.-Sol. + BASE 2 - CARTR. Ø4
G6= 2x3/2 NO-NO (= 5/3 PC) Sol.-Sol. + BASE 2 - CARTR. Ø6
G8= 2x3/2 NO-NO (= 5/3 PC) Sol.-Sol. + BASE 2 - CARTR. Ø8
H2= 2x3/2 NC-NO Sol.-Sol. + BASE 2 - CARTR. G1/8" GAS
H4= 2x3/2 NC-NO Sol.-Sol. + BASE 2 - CARTR. Ø4
H6= 2x3/2 NC-NO Sol.-Sol. + BASE 2 - CARTR. Ø6
H8= 2x3/2 NC-NO Sol.-Sol. + BASE 2 - CARTR. Ø8
I2= 2x3/2 NO-NC Sol.-Sol. + BASE 2 - CARTR. G1/8" GAS
I4= 2x3/2 NO-NC Sol.-Sol. + BASE 2 - CARTR. Ø4
I6= 2x3/2 NO-NC Sol.-Sol. + BASE 2 - CARTR. Ø6
I8= 2x3/2 NO-NC Sol.-Sol. + BASE 2 - CARTR. Ø8
T1= Free valve space plug + BASE 1 - CARTR. G1/8" GAS
T2= Free valve space plug + BASE 2 - CARTR. G1/8" GAS
T3= Free valve space plug + BASE 1 - CARTR. Ø4
T4= Free valve space plug + BASE 2 - CARTR. Ø4
T5= Free valve space plug + BASE 1 - CARTR. Ø6
T6= Free valve space plug + BASE 2 - CARTR. Ø6
T7= Free valve space plug + BASE 1 - CARTR. Ø8
T8= Free valve space plug + BASE 2 - CARTR. Ø8

NOTE:
While configuring the manifold always be careful that the maximum number of electrical signals available is 32.
The use of monostable valve mounted on a base type 2 (2 electrical signals occupied) causes the loss of one electric signal. In this case the monostable valve can be replaced by a bistable valve. The diaphragms plugs are used to intercept the conduits 1,3 & 5 of the base. If it is necessary to interrupt more than one conduit in the same time then put in line the letters which identifies the position (for exemple : regarding the 3 & 5 conduits, put the Y & Z letters).
Should one or more conduits be cut more than one time it is necessary to add the relevant intermediate Supply/Exhaust module.

ACCESSORIES

U2 = Power supply 2 positions module
U4 = Power supply 4 positions module
W = Intermediate supply & exhaust module
X = Diaphragm plug on pipe 1
Y = Diaphragm plug on pipe 3
Z = Diaphragm plug on pipe 5
XY = Diaphragm plug on pipe 1 & 3
ZX = Diaphragm plug on pipe 5 & 1
ZY = Diaphragm plug on pipe 5 & 3
ZXY = Diaphragm plug on pipe 5, 1 & 3

Series 2500 OPTYMA-T solenoid valve manifolds managed by multipoint connection are "well tried components"

	Well-tried component	- The product is a well-tried product for a safety-related application according to ISO 13849-1. - The relevant basic and well-tried safety principles according ISO 13849-2 for this product are fulfilled. - The suitability of the product for a precise application must be verified and confirmed by the user.
B_{10d}	50.000.000	

Overall dimensions and technical information are provided solely for informative purposes and may be modified without notice

General:

CANopen® module is directly integrated on Optyma-T solenoid valves manifold via a 37 poles connector, normally used for multipolar cable connection.
Optyma-T solenoid valves connected to node must be PNP equivalent (final 02 in ordering code).
The node can be easily installed also on solenoid valves manifold already mounted on equipment.
Module can manage up to 32 solenoid valves, and, in the same time, a max number of 4 Input modules 5225.08T or a max number of 4 Input modules 5225.12T.
CANopen® module recognizes automatically the presence of the Input modules on power on.
Regardless of the number of Input modules connected, the managable solenoid valves are 32.
Node power supply is made by a M12 4P male circular connector.
The separation between node 24 VDC Power supply and outputs 24 VDC allows to switch off the outputs maintaning powered the node and inputs, if present.
Connection to Bus CANopen® is possible via 2 M12 5P male - female circular connectors; these two are connected in parallel and according to CiA Draft Recommendation 303-1 (V. 1.3 : 30 December 2004).
Transmission speed can be set by 3 dip-switches.
The node address can be set by 6 dip-switches using BCD numeration.
The module includes an internal terminating resistance that can be activated by a dip-switch.

Ordering code

5525.32T

Scheme / Overall dimensions and I/O layout :

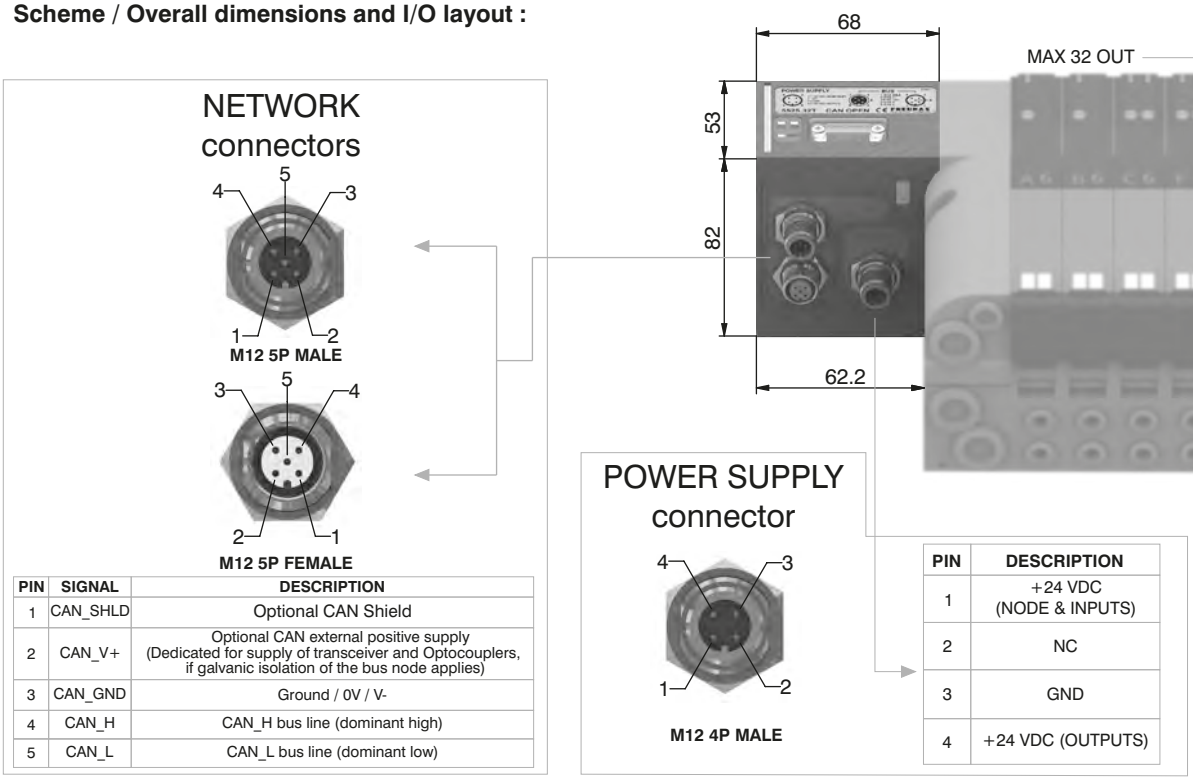

PIN	SIGNAL	DESCRIPTION
1	CAN_SHLD	Optional CAN Shield
2	CAN_V+	Optional CAN external positive supply (Dedicated for supply of transceiver and Optocouplers, if galvanic isolation of the bus node applies)
3	CAN_GND	Ground / 0V / V-
4	CAN_H	CAN_H bus line (dominant high)
5	CAN_L	CAN_L bus line (dominant low)

PIN	DESCRIPTION
1	+24 VDC (NODE & INPUTS)
2	NC
3	GND
4	+24 VDC (OUTPUTS)

Technical characteristics

	Model	5525.32T
	Specifications	CiA Draft Standard Proposal 301 V 4.10 (15 August 2006)
	Case	Reinforced technopolymer
Power supply	Power supply connection	M12 4P male connector (IEC 60947-5-2)
	Power supply voltage	+24 VDC +/- 10%
	Node consumption (without inputs)	30 mA
	Power supply diagnosis	Green LED PWR
Outputs	PNP equivalent outputs	+24 VDC +/- 10%
	Maximum current for each output	100 mA
	Maximum output number	32
	Max output simultaneously actuated	32
Network	Network connectors	2 M12 5P connectors male-female Type A (IEC 60947-5-2)
	Baud rate	10 - 20 - 50 - 125 - 250 - 500 - 800 - 1000 Kbit/s
	Addresses, possible numbers	From 1 to 63
	Max nodes in net	64 (slave + master)
	Bus maximum recommended length	100 m at 500 Kbit/s
	Bus diagnosis	Green LED + Red LED
	Configuration file	Available from our web site: http://www.pneumaxspa.com
	IP protection grade	IP65 when assembled
	Temperature range	From 0° to +50° C

General:

DeviceNet module is directly integrated on Optyma-T solenoid valves manifold via a 37 poles connector, normally used for multipolar cable connection.
Optyma-T solenoid valves connected to node must be PNP equivalent (final 02 in ordering code).
The node can be easily installed also on solenoid valves manifold already mounted on equipment.
Module can manage up to 32 solenoid valves, and, in the same time, a max number of 4 Input modules 5225.08T or a max number of 4 Input modules 5225.12T.
DeviceNet module recognizes automatically the presence of the Input modules on power on.
Regardless of the number of Input modules connected, the managable solenoid valves are 32.
Node power supply is made by a M12 4P male circular connector.
The separation between node 24 VDC Power supply and outputs 24 VDC allows to switch off the outputs maintaning powered the node and inputs, if present.
Connection to Bus DeviceNet is possible via 2 M12 5P male - female circular connectors; these two are connected in parallel and according to DeviceNet Specifications Volume I, release 2.0.
Transmission speed can be set by 3 dip-switches.
The node address can be set by 6 dip-switches using BCD numeration.
The module includes an internal terminating resistance that can be activated by a dip-switch.

Ordering code

5425.32T

Scheme / Overall dimensions and I/O layout :

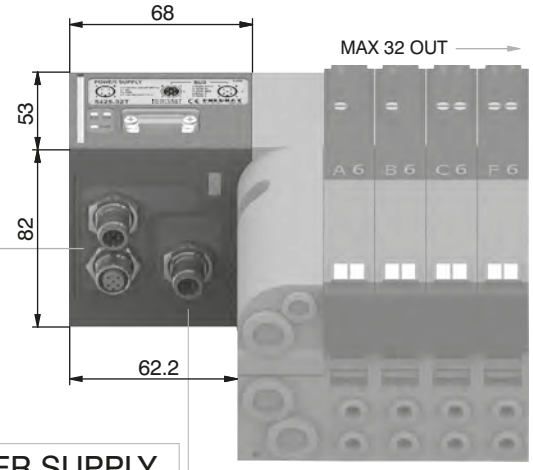

NETWORK connectors

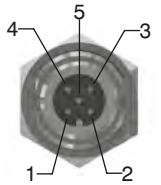

M12 5P MALE

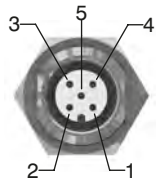

M12 5P FEMALE

PIN	SIGNAL	DESCRIPTION
1	CAN_SHLD	Optional CAN Shield
2	CAN_V+	Optional CAN external positive supply (Dedicated for supply of transceiver and Optocouplers, if galvanic isolation of the bus node applies)
3	CAN_GND	Ground / 0V / V-
4	CAN_H	CAN_H bus line (dominant high)
5	CAN_L	CAN_L bus line (dominant low)

POWER SUPPLY connector

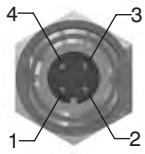

M12 4P MALE

PIN	DESCRIPTION
1	+24 VDC (NODE & INPUTS)
2	NC
3	GND
4	+24 VDC (OUTPUTS)

Technical characteristics

	Model	5425.32T
	Specifications	DeviceNet Specifications Volume I, release 2.0.
	Case	Reinforced technopolymer
Power supply	Power supply connection	M12 4P male connector (IEC 60947-5-2)
	Power supply voltage	+24 VDC +/- 10%
	Node consumption (without inputs)	30 mA
	Power supply diagnosis	Green LED PWR
Outputs	PNP equivalent outputs	+24 VDC +/- 10%
	Maximum current for each output	100 mA
	Maximum output number	32
	Max output simultaneously actuated	32
Network	Network connectors	2 M12 5P connectors male-female Type A (IEC 60947-5-2)
	Baud rate	125 - 250 - 500 Kbit/s
	Addresses, possible numbers	From 1 to 63
	Max nodes in net	64 (slave + master)
	Bus maximum recommended length	100 m at 500 Kbit/s
	Bus diagnosis	Green LED + Red LED
	Configuration file	Available from our web site: http://www.pneumaxspa.com
	IP protection grade	IP65 when assembled
	Temperature range	From 0° to +50° C

Overall dimensions and technical information are provided solely for informative purposes and may be modified without notice

General:

PROFIBUS DP module is directly integrated on Optyma-T solenoid valves manifold via a 37 poles connector, normally used for multipolar cable connection.
Optyma-T solenoid valves connected to node must be PNP equivalent (final 02 in ordering code).
The node can be easily installed also on solenoid valves manifold already mounted on equipment.
Module can manage up to 32 solenoid valves, and, in the same time, a max number of 8 Input modules 5225.08T or a max number of 8 Input modules 5225.12T.
PROFIBUS DP module recognizes automatically the presence of the Input modules on power on.
Regardless of the number of Input modules connected, the managable solenoid valves are 32.
Node power supply is made by a M12 4P male circular connector.
The separation between node 24 VDC Power supply and outputs 24 VDC allows to switch off the outputs maintaning powered the node and inputs, if present.
Connection to Bus PROFIBUS DP is possible via 2 M12 type B 5P male - female circular connectors; these two are connected in parallel and according to PROFIBUS Interconnection Technology (Version 1.1 : August 2001).
The node address can be set using BCD numeration: 4 dip-switches for the units and 4 dip-switches for the tens.
The module includes an internal terminating resistance that can be activated by 2 dip-switches.

Ordering code

5325.32T

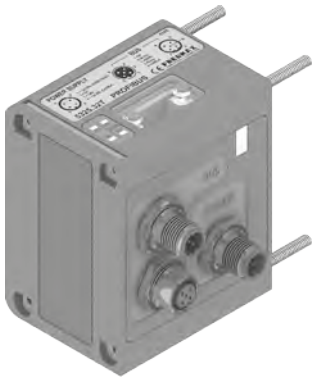

Scheme / Overall dimensions and I/O layout :

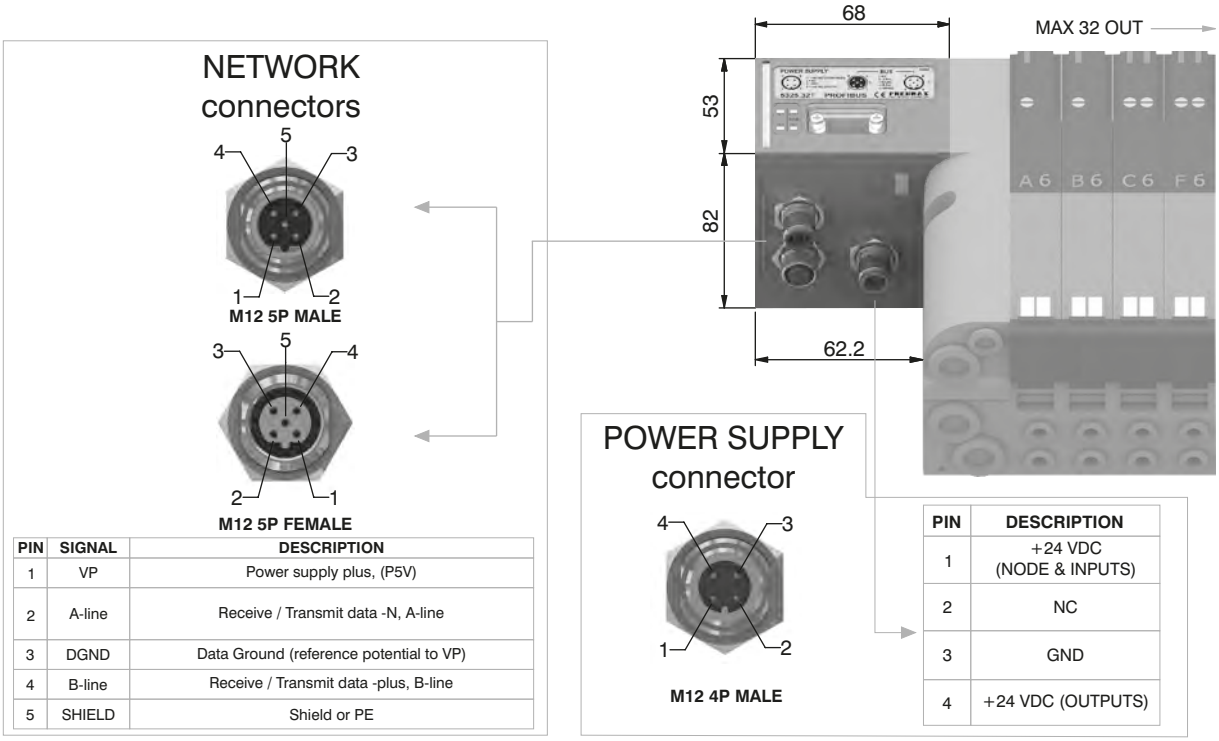

PIN	SIGNAL	DESCRIPTION
1	VP	Power supply plus, (P5V)
2	A-line	Receive / Transmit data -N, A-line
3	DGND	Data Ground (reference potential to VP)
4	B-line	Receive / Transmit data -plus, B-line
5	SHIELD	Shield or PE

PIN	DESCRIPTION
1	+24 VDC (NODE & INPUTS)
2	NC
3	GND
4	+24 VDC (OUTPUTS)

Technical characteristics

	Model	5325.32T
	Specifications	PROFIBUS DP
	Case	Reinforced technopolymer
Power supply	Power supply connection	M12 4P male connector (IEC 60947-5-2)
	Power supply voltage	+24 VDC +/- 10%
	Node consumption (without inputs)	50 mA
	Power supply diagnosis	Green LED PWR / Green LED OUT
Outputs	PNP equivalent outputs	+24 VDC +/- 10%
	Maximum current for each output	100 mA
	Maximum output number	32
	Max output simultaneously actuated	32
Network	Network connectors	2 M12 5P male-female connectors Type B
	Baud rate	9,6 - 19,2 - 93,75 - 187,5 - 500 - 1500 - 3000 - 6000 - 12000 Kbit/s
	Addresses, possible numbers	From 1 to 99
	Max nodes in net	100 (slave + master)
	Bus maximum recommended length	100 m at 12 Mbit/s - 1200 m at 9,6 Kbit/s
	Bus diagnosis	Green LED + Red LED
	Configuration file	Available from our web site: http://www.pneumaxspa.com
	IP protection grade	IP65 when assembled
	Temperature range	From 0° to +50° C

Overall dimensions and technical information are provided solely for informative purposes and may be modified without notice

General:

EtherCAT® module is directly integrated on Optyma-T solenoid valves manifold via a 37 poles connector, normally used for multipolar cable connection.
Optyma-T solenoid valves connected to node must be PNP equivalent (final 02 in ordering code).
The node can be easily installed also on solenoid valves manifold already mounted on equipment.
Module can manage up to 32 solenoid valves, and, in the same time, a max number of 4 Input modules 5225.08T or a max number of 4 Input modules 5225.12T.
The EtherCAT® module, regardless the number of Input module connected, reports to have connected 4 Input modules.
Regardless of the number of Input modules connected, the managable solenoid valves are 32.
Node power supply is made by a M12 4P male circular connector.
The separation between node 24 VDC Power supply and outputs 24 VDC allows to switch off the outputs maintaning powered the node and inputs, if present.
Connection to Bus EtherCAT® is possible via 2 M12 4P type D female circular connectors. These two connectors lead the signal to two different communication ports, so they are not connected in parallel.
The node address is assigned during configuration.
Note: 5700 series has a different configuration file from series 5600.

Ordering code

5725.32T.EC

Scheme / Overall dimensions and I/O layout :

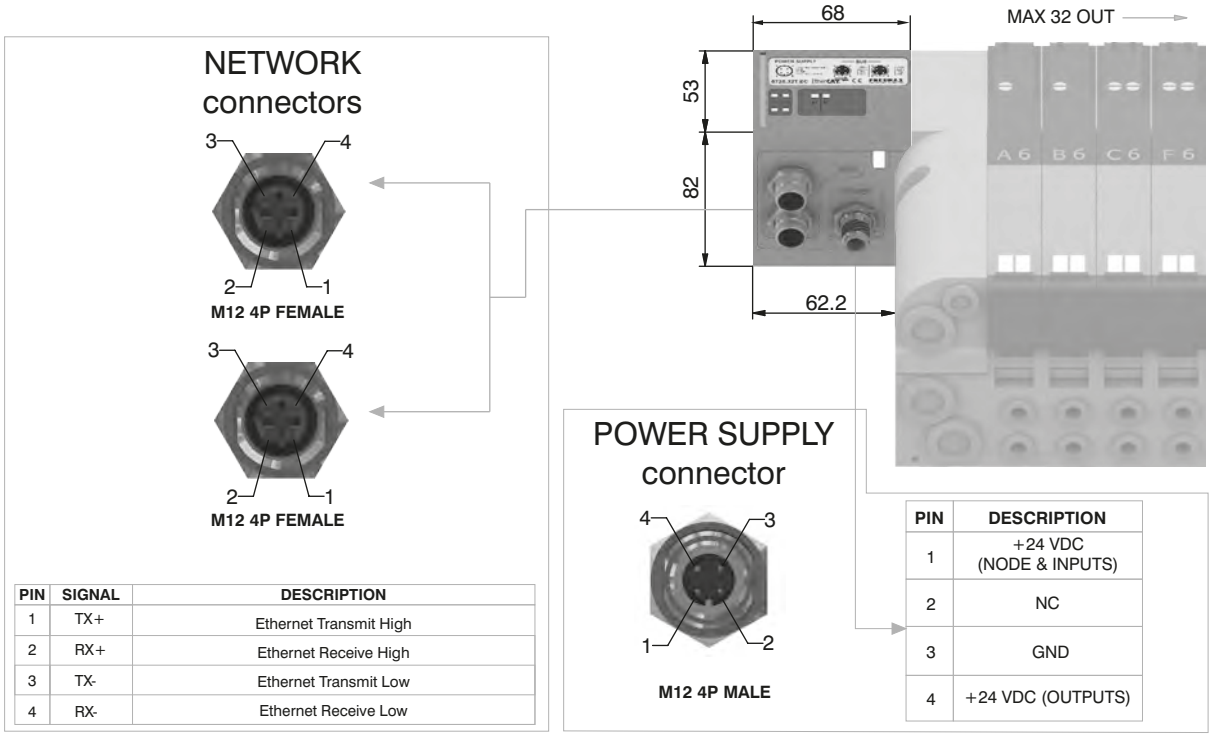

PIN	SIGNAL	DESCRIPTION
1	TX+	Ethernet Transmit High
2	RX+	Ethernet Receive High
3	TX-	Ethernet Transmit Low
4	RX-	Ethernet Receive Low

PIN	DESCRIPTION
1	+24 VDC (NODE & INPUTS)
2	NC
3	GND
4	+24 VDC (OUTPUTS)

Technical characteristics

	Model	5725.32T.EC
	Specifications	EtherCAT® Specifications ETG.1000 series
	Case	Reinforced technopolymer
Power supply	Power supply connection	M12 4P male connector (IEC 60947-5-2)
	Power supply voltage	+24 VDC +/- 10%
	Node consumption (without inputs)	400 mA
	Power supply diagnosis	Green LEDPWR / Green LED OUT
Outputs	PNP equivalent outputs	+24 VDC +/- 10%
	Maximum current for each output	100 mA
	Maximum output number	32
	Max output simultaneously actuated	32
Network	Network connectors	2 M12 4P female connectors Type D (IEC 61076-2-101)
	Baud rate	100 Mbit/s
	Addresses, possible numbers	From 1 to 65535
	Max nodes in net	65536 (Master + Slave)
	Maximum distance between 2 nodes	100 m
	Bus diagnosis	1 green and 1 red LED for status + 2 LEDs for link & activity
	Configuration file	Available from our web site: http://www.pneumaxspa.com
	IP protection grade	IP65 when assembled
	Temperature range	From 0° to +50° C

Overall dimensions and technical information are provided solely for informative purposes and may be modified without notice

General :

PROFINET IO RT module is directly integrated on Optyma-T solenoid valves manifold via a 37 poles connector, normally used for multipolar cable connection.
Optyma-T solenoid valves connected to node must be PNP equivalent (final 02 in ordering code).
The node can be easily installed also on solenoid valves manifold already mounted on equipment.
Module can manage up to 32 solenoid valves, and, in the same time, a max number of 8 Input modules 5225.08T or a max number of 8 Input modules 5225.12T.
The PROFINET IO RT module, regardless the number of Input module connected, reports to have connected 8 Input modules.
Regardless of the number of Input modules connected, the managable solenoid valves are 32.
Node power supply is made by a M12 4P male circular connector.
The separation between node 24 VDC Power supply and outputs 24 VDC allows to switch off the outputs maintaning powered the node and inputs, if present.
Connection to Bus PROFINET IO RT is possible via 2 M12 4P type D female circular connectors. These two connectors lead the signal to two different communication ports, so they are not connected in parallel.
The node address is assigned during configuration.

Ordering code

5725.32T.PN

Scheme / Overall dimensions and I/O layout :

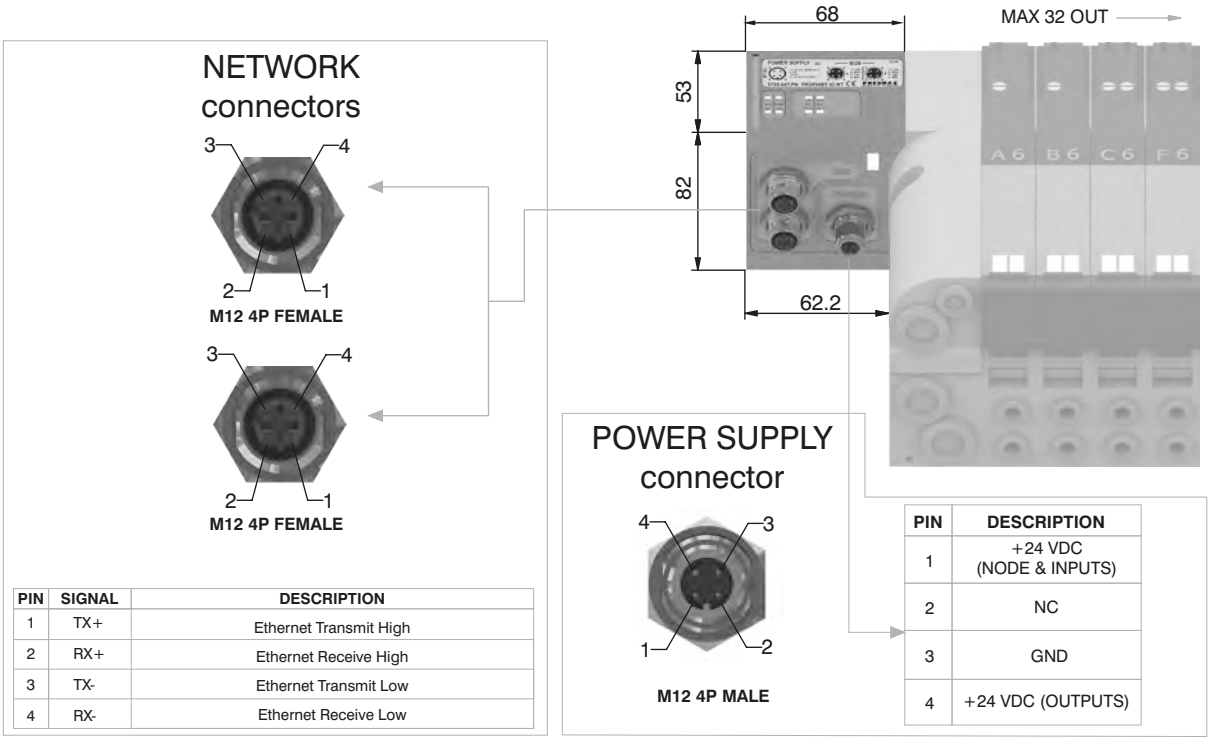

PIN	SIGNAL	DESCRIPTION
1	TX+	Ethernet Transmit High
2	RX+	Ethernet Receive High
3	TX-	Ethernet Transmit Low
4	RX-	Ethernet Receive Low

PIN	DESCRIPTION
1	+24 VDC (NODE & INPUTS)
2	NC
3	GND
4	+24 VDC (OUTPUTS)

Technical characteristics

	Model	5725.32T.PN
	Specifications	PROFINET IO RT
	Case	Reinforced technopolymer
Power supply	Power supply connection	M12 4P male connector (IEC 60947-5-2)
	Power supply voltage	+24 VDC +/- 10%
	Node consumption (without inputs)	400 mA
	Power supply diagnosis	Green LED PWR / Green LED OUT
Outputs	PNP equivalent outputs	+24 VDC +/- 10%
	Maximum current for each output	100 mA
	Maximum output number	32
	Max output simultaneously actuated	32
Network	Network connectors	2 M12 4P female connectors Type D (IEC 61076-2-101)
	Baud rate	100 Mbit/s
	Addresses, possible numbers	As an IP address
	Max nodes in net	As an Ethernet Network
	Maximum distance between 2 nodes	100 m
	Bus diagnosis	1 green and 1 red LED for status + 4 LEDs for link & activity
	Configuration file	Available from our web site: http://www.pneumaxspa.com
	IP protection grade	IP65 when assembled
	Temperature range	From 0° to +50° C

General :

EtherNet/IP module is directly integrated on Optyma-T solenoid valves manifold via a 37 poles connector, normally used for multipolar cable connection.
Optyma-T solenoid valves connected to node must be PNP equivalent (final 02 in ordering code).
The node can be easily installed also on solenoid valves manifold already mounted on equipment.
Module can manage up to 32 solenoid valves, and, in the same time, a max number of 8 Input modules 5225.08T or a max number of 8 Input modules 5225.12T.
The EtherNet/IP module, regardless the number of Input module connected, reports to have connected 8 Input modules.
Regardless of the number of Input modules connected, the managable solenoid valves are 32.
Node power supply is made by a M12 4P male circular connector.
The separation between node 24 VDC Power supply and outputs 24 VDC allows to switch off the outputs maintaning powered the node and inputs, if present.
Connection to Bus EtherNet/IP is possible via 2 M12 4P type D female circular connectors. These two connectors lead the signal to two different communication ports, so they are not connected in parallel.
The node address is assigned during configuration.

Ordering code

5725.32T.EI

Scheme / Overall dimensions and I/O layout :

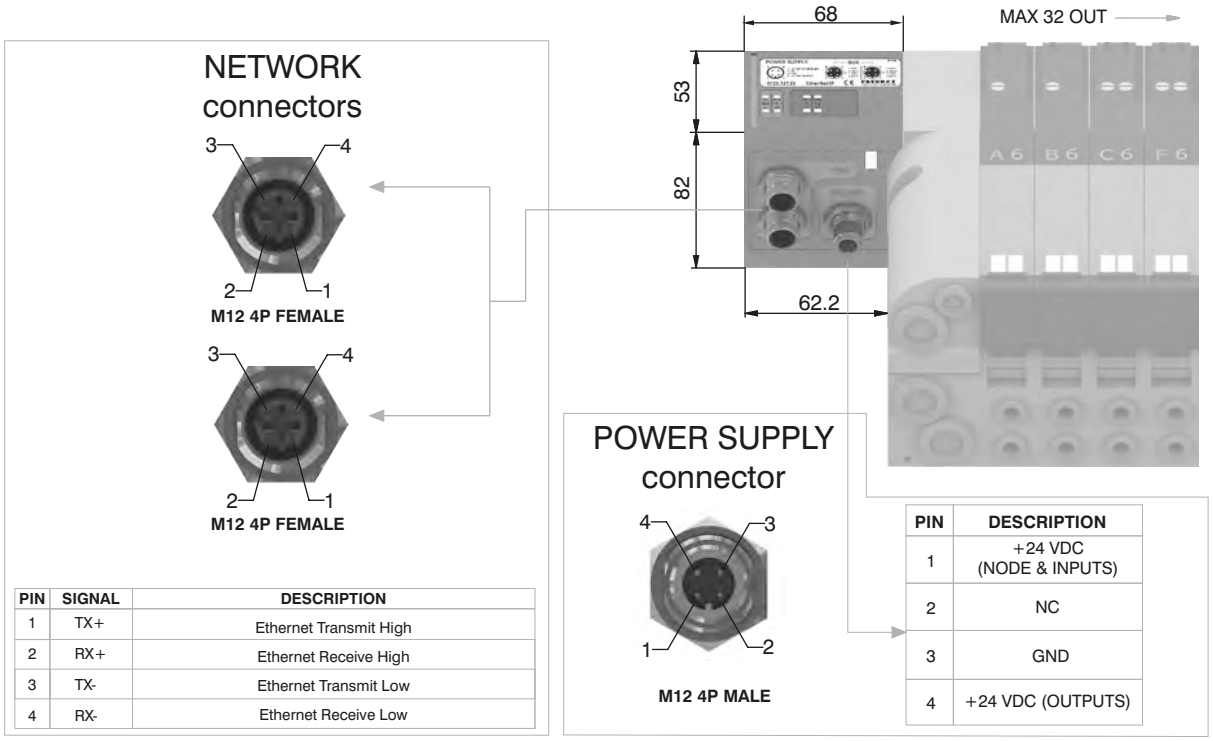

PIN	SIGNAL	DESCRIPTION
1	TX+	Ethernet Transmit High
2	RX+	Ethernet Receive High
3	TX-	Ethernet Transmit Low
4	RX-	Ethernet Receive Low

PIN	DESCRIPTION
1	+24 VDC (NODE & INPUTS)
2	NC
3	GND
4	+24 VDC (OUTPUTS)

Technical characteristics

	Model	5725.32T.EI
	Specifications	The EtherNet/IP Specification
	Case	Reinforced technopolymer
Power supply	Power supply connection	M12 4P male connector (IEC 60947-5-2)
	Power supply voltage	+24 VDC +/- 10%
	Node consumption (without inputs)	400 mA
	Power supply diagnosis	Green LED PWR / Green LED OUT
Outputs	PNP equivalent outputs	+24 VDC +/- 10%
	Maximum current for each output	100 mA
	Maximum output number	32
	Max output simultaneously actuated	32
Network	Network connectors	2 M12 4P female connectors Type D (IEC 61076-2-101)
	Baud rate	100 Mbit/s
	Addresses, possible numbers	As an IP address
	Max nodes in net	As an Ethernet Network
	Maximum distance between 2 nodes	100 m
	Bus diagnosis	1 green and 1 red LED for status + 4 LEDs for link & activity
	Configuration file	Available from our web site: http://www.pneumaxspa.com
	IP protection grade	IP65 when assembled
	Temperature range	From 0° to +50° C

Overall dimensions and technical information are provided solely for informative purposes and may be modified without notice

General :

Powerlink module is directly integrated on Optyma-T solenoid valves manifold via a 37 poles connector, normally used for multipolar cable connection.
Optyma-T solenoid valves connected to node must be PNP equivalent (final 02 in ordering code).
The node can be easily installed also on solenoid valves manifold already mounted on equipment.
Module can manage up to 32 solenoid valves, and, in the same time, a max number of 8 Input modules 5225.08T or a max number of 8 Input modules 5225.12T.
The Powerlink module, regardless the number of Input module connected, reports to have connected 8 Input modules.
Regardless of the number of Input modules connected, the managable solenoid valves are 32.
Node power supply is made by a M12 4P male circular connector.
The separation between node 24 VDC Power supply and outputs 24 VDC allows to switch off the outputs maintaning powered the node and inputs, if present.
Connection to Bus Powerlink is possible via 2 M12 4P type D female circular connectors. These two connectors lead the signal to two different communication ports, so they are not connected in parallel.
The node address is assigned during configuration.

Ordering code

5725.32T.PL

Scheme / Overall dimensions and I/O layout :

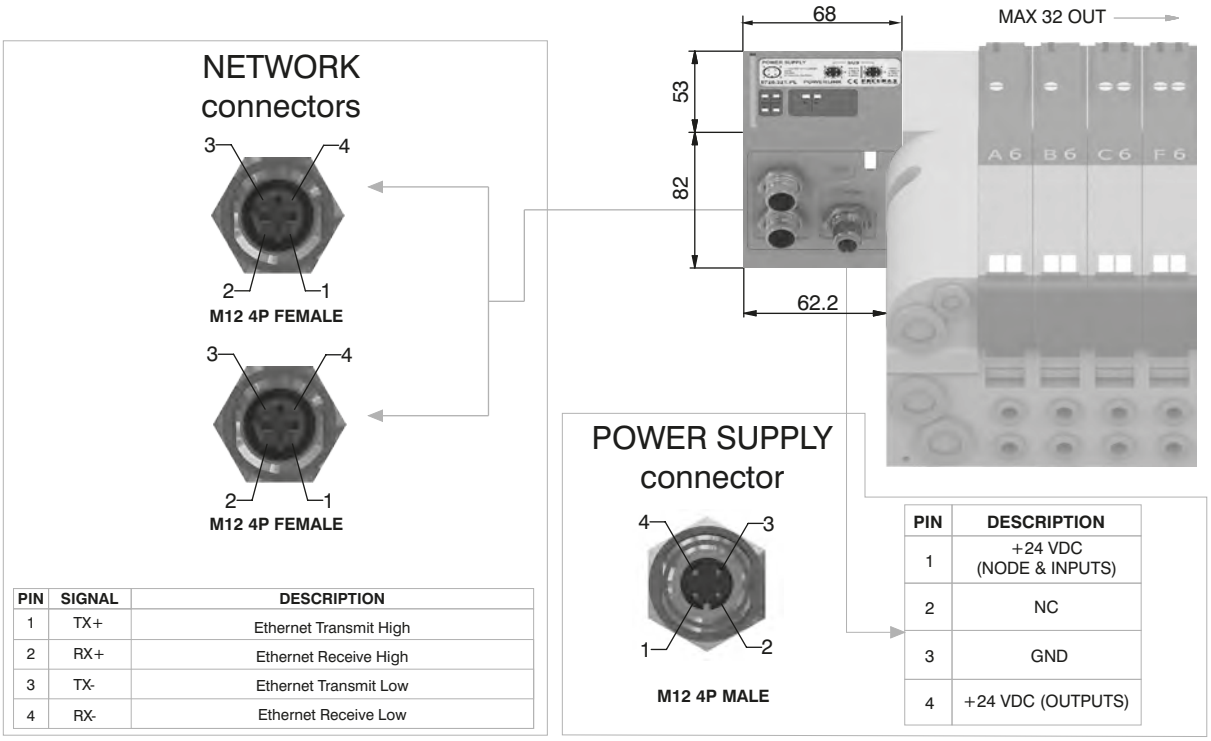

PIN	SIGNAL	DESCRIPTION
1	TX+	Ethernet Transmit High
2	RX+	Ethernet Receive High
3	TX-	Ethernet Transmit Low
4	RX-	Ethernet Receive Low

PIN	DESCRIPTION
1	+24 VDC (NODE & INPUTS)
2	NC
3	GND
4	+24 VDC (OUTPUTS)

Technical characteristics

	Model	5725.32T.PL
	Specifications	Ethernet POWERLINK Communication Profile Specifications
	Case	Reinforced technopolymer
Power supply	Power supply connection	M12 4P male connector (IEC 60947-5-2)
	Power supply voltage	+24 VDC +/- 10%
	Node consumption (without inputs)	400 mA
	Power supply diagnosis	Green LED PWR / Green LED OUT
Outputs	PNP equivalent outputs	+24 VDC +/- 10%
	Maximum current for each output	100 mA
	Maximum output number	32
	Max output simultaneously actuated	32
Network	Network connectors	2 M12 4P female connectors Type D (IEC 61076-2-101)
	Baud rate	100 Mbit/s
	Addresses, possible numbers	239
	Max nodes in net	240
	Maximum distance between 2 nodes	100 m
	Bus diagnosis	1 green and 1 red LED for status + 2 LEDs for link & activity
	Configuration file	Available from our web site: http://www.pneumaxspa.com
	IP protection grade	IP65 when assembled
	Temperature range	From 0° to +50° C

General :

Modbus/TCP module is directly integrated on Optyma-T solenoid valves manifold via a 37 poles connector, normally used for multipolar cable connection.
Optyma-T solenoid valves connected to node must be PNP equivalent (final 02 in ordering code).
The node can be easily installed also on solenoid valves manifold already mounted on equipment.
Module can manage up to 32 solenoid valves, and, in the same time, a max number of 8 Input modules 5225.08T or a max number of 8 Input modules 5225.12T.
The Modbus/TCP module, regardless the number of Input module connected, reports to have connected 8 Input modules.
Regardless of the number of Input modules connected, the managable solenoid valves are 32.
Node power supply is made by a M12 4P male circular connector.
The separation between node 24 VDC Power supply and outputs 24 VDC allows to switch off the outputs maintaning powered the node and inputs, if present.
Connection to Bus Modbus/TCP is possible via 2 M12 4P type D female circular connectors. These two connectors lead the signal to two different communication ports, so they are not connected in parallel.
The node address is assigned during configuration.

Ordering code

5725.32T.MT

Scheme / Overall dimensions and I/O layout :

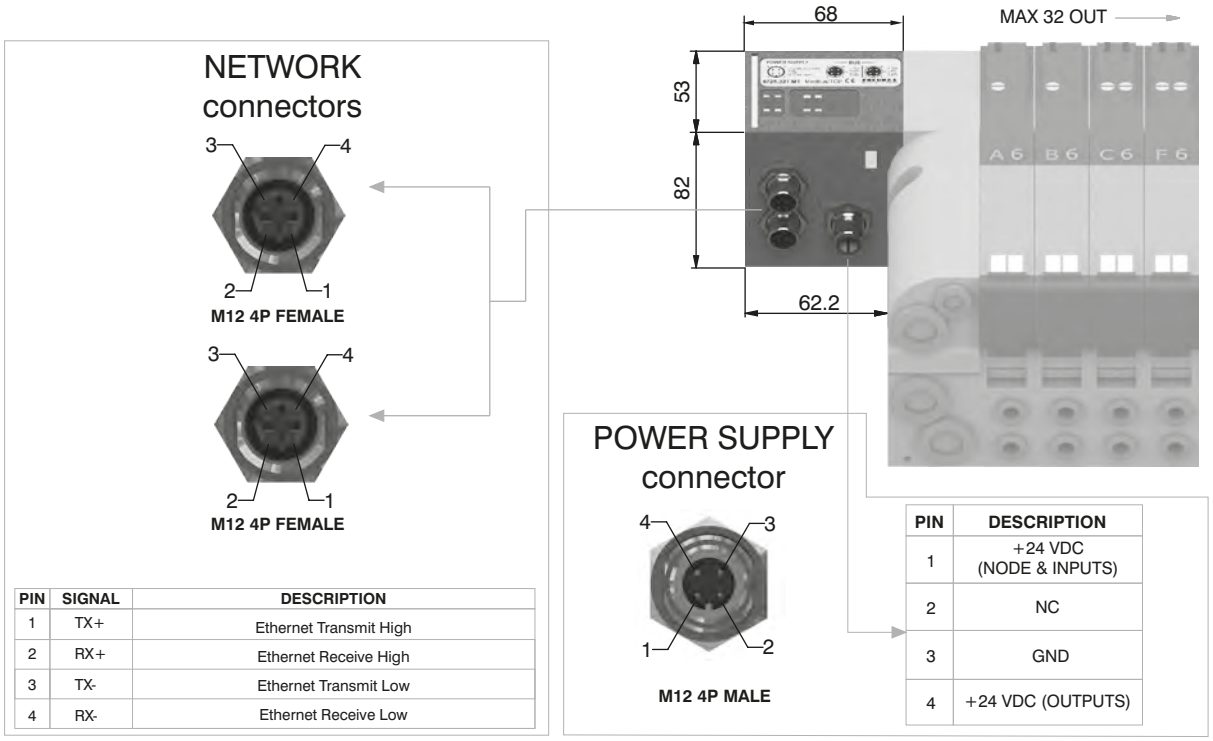

PIN	SIGNAL	DESCRIPTION
1	TX+	Ethernet Transmit High
2	RX+	Ethernet Receive High
3	TX-	Ethernet Transmit Low
4	RX-	Ethernet Receive Low

PIN	DESCRIPTION
1	+24 VDC (NODE & INPUTS)
2	NC
3	GND
4	+24 VDC (OUTPUTS)

Technical characteristics

	Model	5725.32T.MT
	Specifications	MODBUS Application Protocol Specification V1.1a, June 4, 2004
	Case	Reinforced technopolymer
Power supply	Power supply connection	M12 4P male connector (IEC 60947-5-2)
	Power supply voltage	+24 VDC +/- 10%
	Node consumption (without inputs)	400 mA
	Power supply diagnosis	Green LED PWR / Green LED OUT
Outputs	PNP equivalent outputs	+24 VDC +/- 10%
	Maximum current for each output	100 mA
	Maximum output number	32
	Max output simultaneously actuated	32
Network	Network connectors	2 M12 4P female connectors Type D (IEC 61076-2-101)
	Baud rate	100 Mbit/s
	Addresses, possible numbers	248
	Max nodes in net	248
	Maximum distance between 2 nodes	100 m
	Bus diagnosis	1 green and 1 red LED for status + 2 LEDs for link & activity
	Configuration file	Modbus/TCP nodes don't require configuration file
	IP protection grade	IP65 when assembled
	Temperature range	From 0° to +50° C

Overall dimensions and technical information are provided solely for informative purposes and may be modified without notice

General :

Modules have 8 connectors M8 3P female.

The Inputs are PNP equivalent 24 VDC ±10%.
To each connector it is possible to plug both 2 wires Inputs (switches, magnetic switches pressure switches, etc) or 3 wires Inputs (proximity, photocells, electronic sensors, etc).
The maximum current available for all 8 Inputs is 300 mA.
Each module includes a 300 mA self-mending fuse. If a short circuit or a overcharge (overall current >300mA) occur the safety device acts cutting the 24 VDC power supply to all M8 connectors on the module and switching off the green led PWR. Any other Input module connected to the node will remain powered and will function correctly.
Once the cause of the fault disappears the green LED PWR lights up indicating the ON state and the node will re-start to operate.
The maximum number of Input modules supported is 4 for CANopen®, DeviceNet and EtherCAT®.
The maximum number of Input modules supported is 8 for PROFIBUS DP, PROFINET IO RT EtherNet/IP and Powerlink.

Ordering code

5225.08T

Scheme / Overall dimensions and I/O layout :

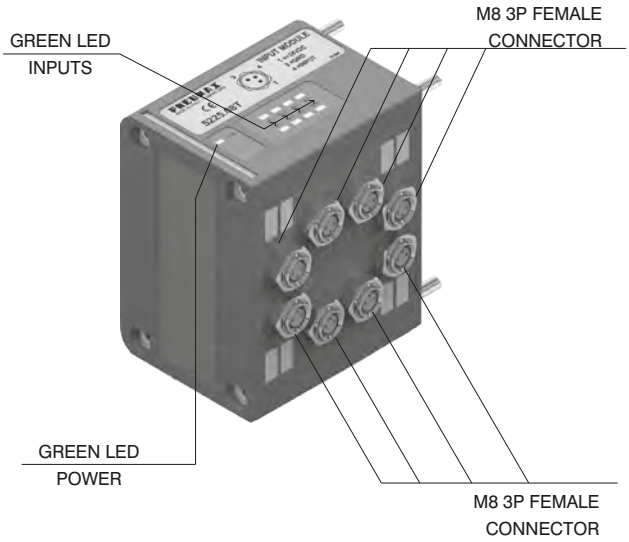

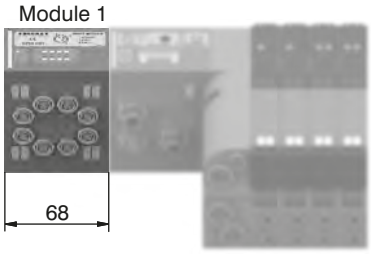

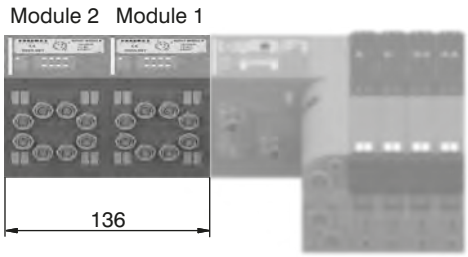

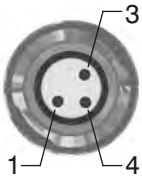

PIN	DESCRIPTION
1	+24 VDC
4	INPUT
3	GND

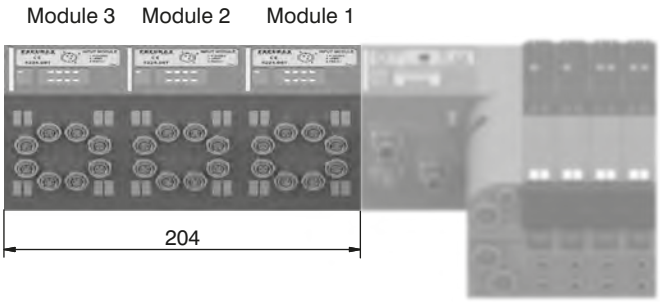

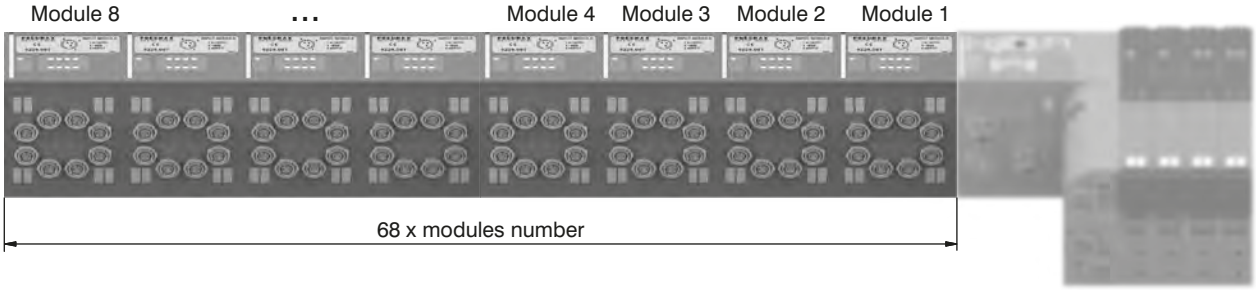

General :

Modules have 4 connectors M12 5P female.

The Inputs are PNP equivalent 24 VDC ±10%.
To each connector it is possible to plug both 2 wires Inputs (switches, magnetic switches pressure switches, etc) or 3 wires Inputs (proximity, photocells, electronic sensors, etc).
The maximum current available for all 8 Inputs is 300 mA.
Each module includes a 300 mA self-mending fuse. If a short circuit or a overcharge (overall current >300mA) occur the safety device acts cutting the 24 VDC power supply to all M8 connectors on the module and switching off the green led PWR. Any other Input module connected to the node will remain powered and will function correctly.
Once the cause of the fault disappears the green LED PWR lights up indicating the ON state and the node will re-start to operate.
The maximum number of Input modules supported is 4 for CANopen®, DeviceNet and EtherCAT®.
The maximum number of Input modules supported is 8 for PROFIBUS DP, PROFINET IO RT EtherNet/IP and Powerlink.

Ordering code

5225.12T

Scheme / Overall dimensions and I/O layout :

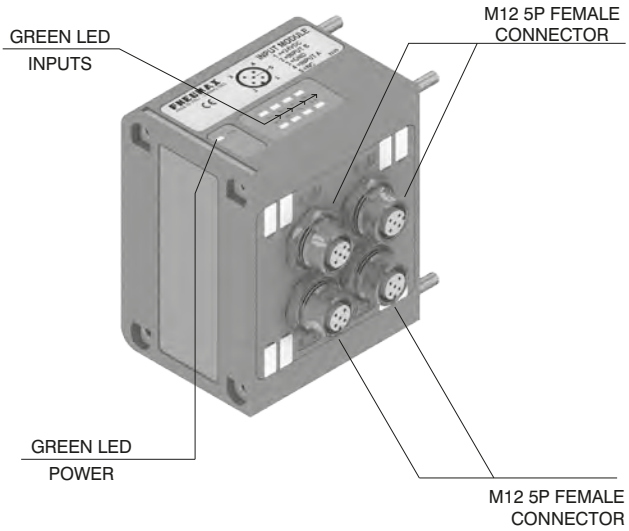

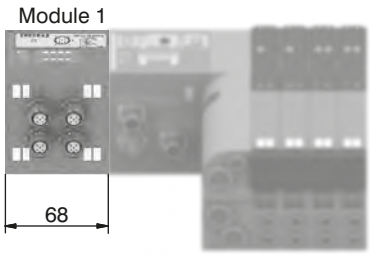

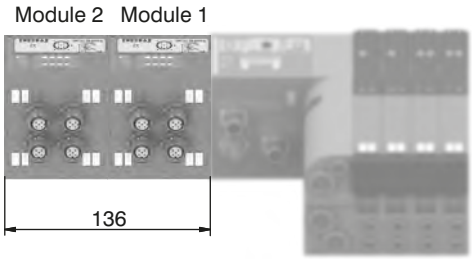

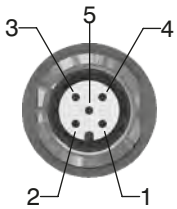

PIN	DESCRIPTION
1	+24 VDC
2	INPUT B
3	GND
4	INPUT A
5	NC

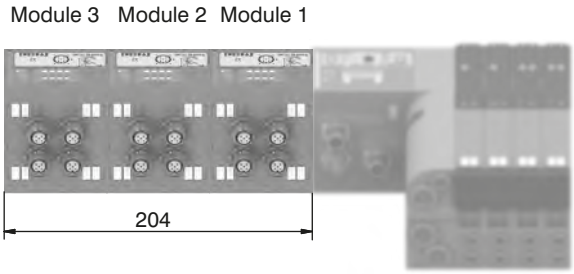

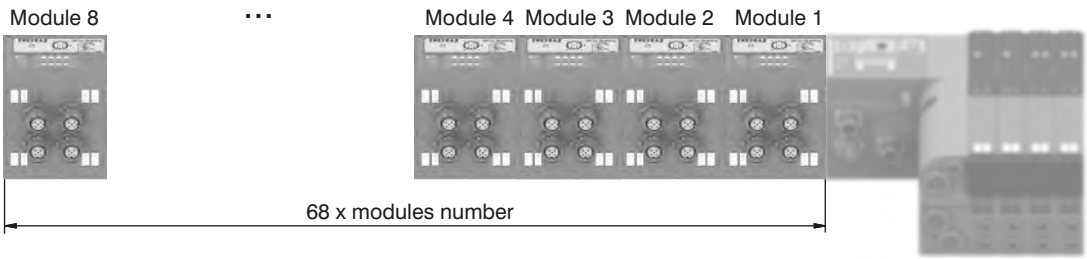

Overall dimensions and technical information are provided solely for informative purposes and may be modified without notice

General :

This module is fitted with two M8 3 pin female connectors.

With this module is possible to read two analogue inputs (voltage or current).
The inputs are sampled at 12 bit.
For practicality the sampled value is transmitted with 16 bit, of which the four less significant are fixed at zero.

Available models:
5225.2T.00T (voltage signal 0 - 10V);
5225.2T.01T (voltage signal 0 - 5V);
5225.2C.00T (current signal 4 - 20mA);
5225.2C.01T (current signal 0 - 20mA).

Each module includes a 300 mA self-mending fuse. Should a short circuit or a overcharge (overall current >300mA) occur the safety device intervenes cutting the 24VDC power supply to all M8 connectors on the module and switching off the green LED PWR. Any other Input module connected to the node will remain powered and will function correctly. Once the cause of the fault is removed the green LED lights up indicating the ON state and the node will re-start to operate.

This module is counted as four 8 digital Inputs modules.

The Maximum number of 2 analogue Inputs modules supported is 1 for CANopen®, DeviceNet, PROFIBUS DP and EtherCAT®.
The Maximum number of 2 analogue Inputs modules supported is 2 for PROFINET IO RT, EtherNet/IP and Powerlink.

Ordering code

5225.2 _ . _T

Scheme / Overall dimensions and I/O layout :

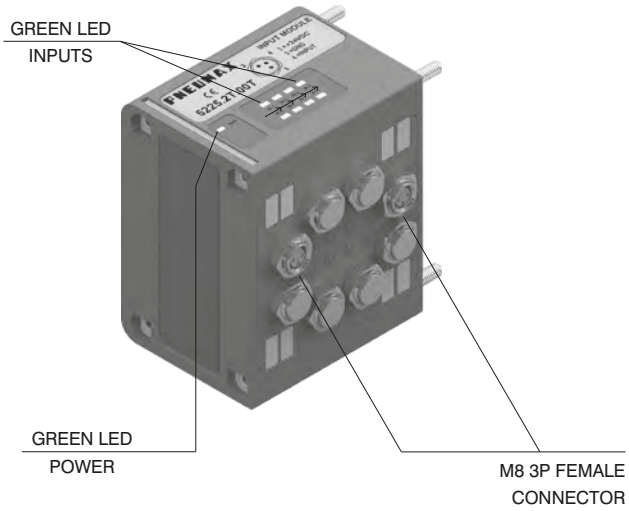

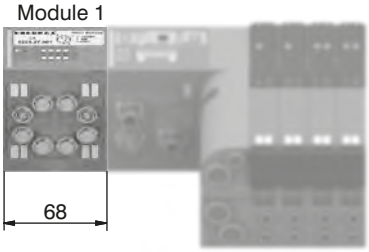

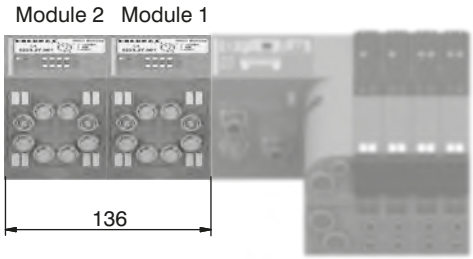

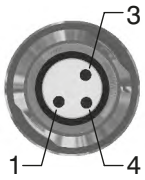

PIN	DESCRIPTION
1	+24 VDC
4	INPUT
3	GND

General :

This module is fitted with two M8 3 pin female connectors.

With this module is possible to read two Pt100 probes.
The inputs are sampled at 12 bit.
For practicality the sampled value is transmitted with 16 bit, of which the four less significant are fixed at zero.

It is possible to plug 3-wires probes or 2-wires probes.
The temperature is expressed in tenths of degree.
The temperature range is 0 – 250°C, beyond which the green LED for probe presence doesn't light on.
The module returns a value correspondent to 250°C when the probe is not connected.

Available models:
5225.2P.00T (2-wires probes);
5225.2P.01T (3-wires probes).

Each module includes a 300 mA self-mending fuse. Should a short circuit or a overcharge (overall current >300mA) occur the safety device intervenes cutting the 24VDC power supply to all M8 connectors on the module and switching off the green LED PWR. Any other Input module connected to the node will remain powered and will function correctly.
Once the cause of the fault is removed the green LED lights up indicating the ON state and the node will re-start to operate.
This module is counted as four 8 digital Inputs modules.

The Maximum number of 2 Pt100 Inputs modules supported is 1 for CANopen®, DeviceNet, PROFIBUS DP and EtherCAT®.
The Maximum number of 2 Pt100 Inputs modules supported is 2 for PROFINET IO RT, EtherNet/IP and Powerlink.

Ordering code

5225.2P . 0_T

Scheme / Overall dimensions and I/O layout :

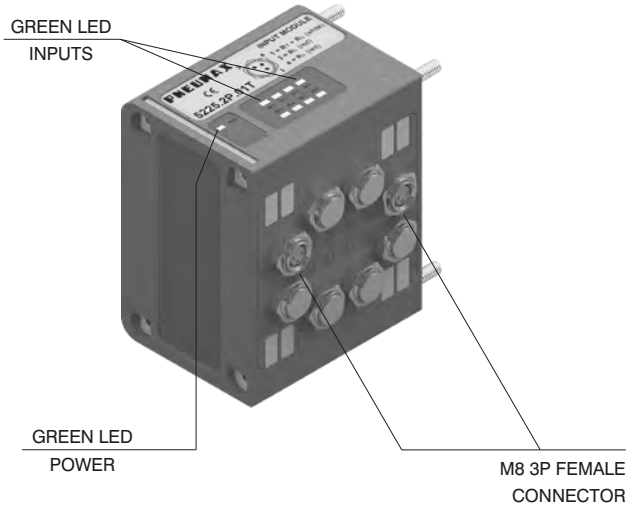

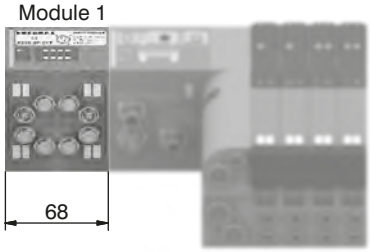

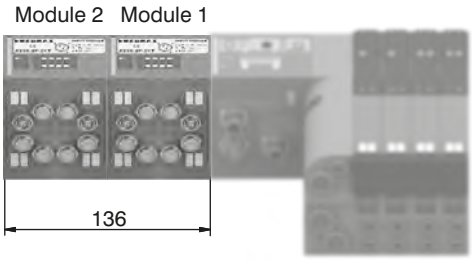

3 WIRES

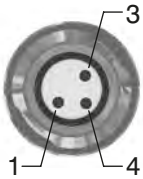

PIN	DESCRIPTION
1	RT (white)
4	RL (red)
3	RL (red)

2 WIRES

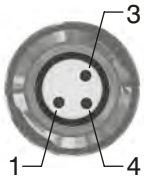

PIN	DESCRIPTION
1	RT (white)
4	NC
3	RL (red)

Overall dimensions and technical information are provided solely for informative purposes and may be modified without notice

General :

This module is fitted with two M8 3 pin female connectors.

With this module is possible to read two Pt100 probes.
The inputs are sampled at 12 bit.
For practicality the sampled value is transmitted with 16 bit, of which the four less significant are fixed at zero.

It is possible to plug 3-wires probes or 2-wires probes.
The temperature is expressed in points according to the formula

$$\text{Temperature} = \left(\frac{\text{Points}}{4095} \times 600\right) - 200$$

The temperature range is -200 to +400°C, beyond which the green LED for probe presence doesn't light on.
The module returns a value correspondent to 400°C when the probe is not connected.

Available models:
5225.2P.10T (2-wires probes);
5225.2P.11T (3-wires probes).

Each module includes a 300 mA self-mending fuse. Should a short circuit or a overcharge (overall current >300mA) occur the safety device intervenes cutting the 24VDC power supply to all M8 connectors on the module and switching off the green LED PWR. Any other INPUT module connected to the node will remain powered and will function correctly.
Once the cause of the fault is removed the green LED lights up indicating the ON state and the node will re-start to operate.
This module is counted as four 8 digital Inputs modules.

The Maximum number of 2 Pt100 Inputs modules supported is 1 for CANopen®, DeviceNet, PROFIBUS DP and EtherCAT®.
The Maximum number of 2 Pt100 Inputs modules supported is 2 for PROFINET IO RT, EtherNet/IP and Powerlink.

Ordering code

5225.2P . 1_T

Scheme / Overall dimensions and I/O layout :

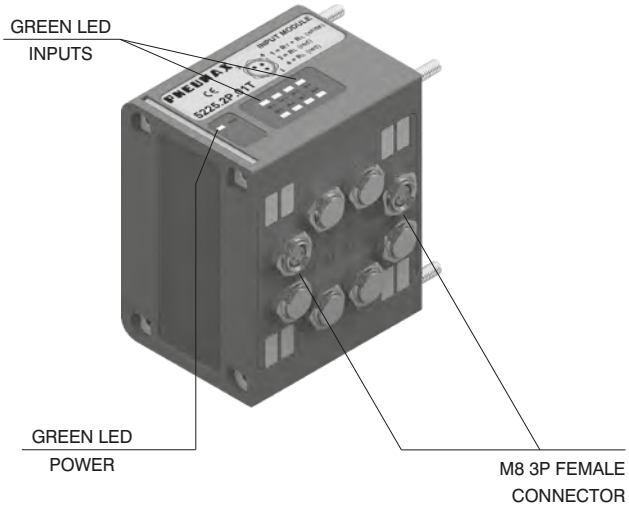

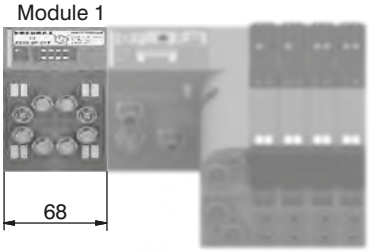

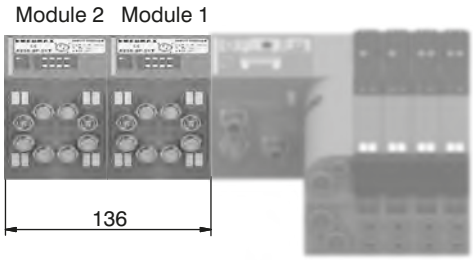

3 WIRES

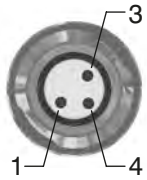

PIN	DESCRIPTION
1	RT (white)
4	RL (red)
3	RL (red)

2 WIRES

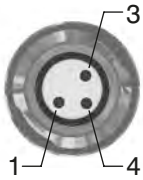

PIN	DESCRIPTION
1	RT (white)
4	NC
3	RL (red)

POWER SUPPLY connector

Socket for Power Supply
STRAIGHT CONNECTOR
M12A 4P FEMALE

Ordering code

5312A.F04.00

Upper view
Slave connector

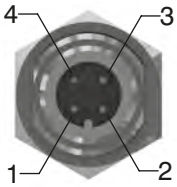

PIN	DESCRIPTION
1	+24 VDC Node
2	
3	0 V
4	+24 VDC Outputs

NETWORK connectors

Socket for Bus CANopen®/DeviceNet
STRAIGHT CONNECTOR
M12A 5P FEMALE

Ordering code

5312A.F05.00

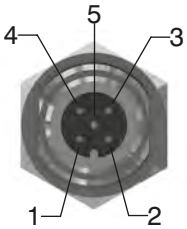

Plug for Bus CANopen®/DeviceNet
STRAIGHT CONNECTOR
M12A 5P MALE

Ordering code

5312A.M05.00

PIN	DESCRIPTION
1	(CAN_SHIELD)
2	(CAN_V+)
3	CAN_GND
4	CAN_H
5	CAN_L

Upper view
Slave connector

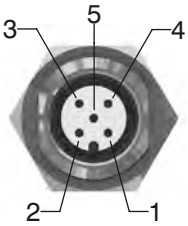

Plug for Bus EtherCAT®,
PROFINET IO RT,
EtherNet/IP and Powerlink
STRAIGHT CONNECTOR M12D 4P MALE

Ordering code

5312D.M04.00

PIN	SIGNAL	DESCRIPTION
1	TX+	Ethernet Transmit High
2	RX+	Ethernet Receive High
3	TX-	Ethernet Transmit Low
4	RX-	Ethernet Receive Low

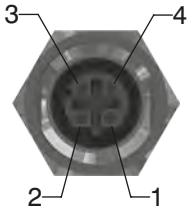

Upper view
Slave connector

Socket for Bus PROFIBUS DP
STRAIGHT CONNECTOR
M12B 5P FEMALE

Ordering code

5312B.F05.00

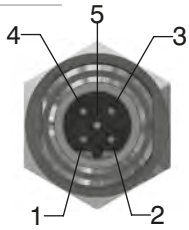

PIN	DESCRIPTION
1	Power Supply
2	A-line
3	DGND
4	B-line
5	SHIELD

Upper view
Slave connector

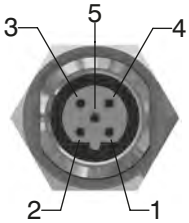

Plug for Bus PROFIBUS DP
STRAIGHT CONNECTOR
M12B 5P MALE

Ordering code

5312B.M05.00

INPUT connectors

Plug for Input module
STRAIGHT CONNECTOR
M8 3P MALE

Ordering code

5308A.M03.00

Upper view
Slave connector

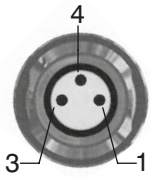

PIN	DESCRIPTION
1	+24 VDC
4	INPUT
3	GND

Plug for Input module
STRAIGHT CONNECTOR
M12A 5P MALE

Ordering code

5312A.M05.00

Plugs

M12 plug

Ordering code

5300.T12

M8 plug

Ordering code

5300.T08

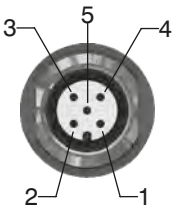

PIN	DESCRIPTION
1	+24 VDC
2	INPUT B
3	GND
4	INPUT A
5	NC

Trademarks: EtherCAT® is registered trademark and patented technology, licensed by Beckhoff Automation GmbH, Germany.

Overall dimensions and technical information are provided solely for informative purposes and may be modified without notice

Manifold Layout configuration

LEFT ENDPLATE

A3 = 37 poles - Self feeding
E3 = 37 poles - External feeding

INPUT MODULES

A = No module
D1= 8 M8 digital inputs module
D2= 8 M12 digital inputs module
T1= 2 analogue inputs 0-5V module
T2= 2 analogue inputs 0-10V module
C1= 2 analogue inputs 0-20mA module
C2= 2 analogue inputs 4-20mA module
P1= 2 Pt100 inputs 2 wires module
P2= 2 Pt100 inputs 3 wires module
E1= 2 Pt100 inputs 2 wires module extended range
E2= 2 Pt100 inputs 3 wires module extended range

RIGHT ENDPLATE

U0 = Closed
U2 = 25 Poles
U3 = 37 Poles

32 OUT VERSION

C3 = CANopen® 32OUT
D3 = DeviceNet 32OUT
P3 = PROFIBUS 32OUT
A3 = EtherCAT® 32OUT (5700
I3 = Series) EtherNet / IP 32OUT
N3 = PROFINET IO RT 32OUT
L3 = Powerlink 32OUT
M3 = Modbus/TCP 32OUT

I/O MODULE

M8
(Requires 25 poles right endplate)

T | __ | . | __ | . . . | __ | . | __ | . | __ | __ | . . . | . . . | . | __ | . | __ | __

MODULE CONFIGURATION

Valve type	Sub-base type
__	__

ACCESSORIES CONFIGURATION

. . .

SHORT CODE FUNCTION / CONNECTION :

A1= 5/2 Sol.-Spring + BASE 1 - CARTR. G1/8" GAS
A2= 5/2 Sol.-Spring + BASE 2 - CARTR. G1/8" GAS
A3= 5/2 Sol.-Spring + BASE 1 - CARTR. Ø4
A4= 5/2 Sol.-Spring + BASE 2 - CARTR. Ø4
A5= 5/2 Sol.-Spring + BASE 1 - CARTR. Ø6
A6= 5/2 Sol.-Spring + BASE 2 - CARTR. Ø6
A7= 5/2 Sol.-Spring + BASE 1 - CARTR. Ø8
A8= 5/2 Sol.-Spring + BASE 2 - CARTR. Ø8
B1= 5/2 Sol.-Diff. + BASE 1 - CARTR. G1/8" GAS
B2= 5/2 Sol.-Diff. + BASE 2 - CARTR. G1/8" GAS
B3= 5/2 Sol.-Diff. + BASE 1 - CARTR. Ø4
B4= 5/2 Sol.-Diff. + BASE 2 - CARTR. Ø4
B5= 5/2 Sol.-Diff. + BASE 1 - CARTR. Ø6
B6= 5/2 Sol.-Diff. + BASE 2 - CARTR. Ø6
B7= 5/2 Sol.-Diff. + BASE 1 - CARTR. Ø8
B8= 5/2 Sol.-Diff. + BASE 2 - CARTR. Ø8
C2= 5/2 Sol.-Sol. + BASE 2 - CARTR. G1/8" GAS
C4= 5/2 Sol.-Sol. + BASE 2 - CARTR. Ø4
C6= 5/2 Sol.-Sol. + BASE 2 - CARTR. Ø6
C8= 5/2 Sol.-Sol. + BASE 2 - CARTR. Ø8
E2= 5/3 CC Sol.-Sol. + BASE 2 - CARTR. G1/8" GAS
E4= 5/3 CC Sol.-Sol. + BASE 2 - CARTR. Ø4
E6= 5/3 CC Sol.-Sol. + BASE 2 - CARTR. Ø6
E8= 5/3 CC Sol.-Sol. + BASE 2 - CARTR. Ø8
F2= 2x3/2 NC-NC (= 5/3 OC) Sol.-Sol. + BASE 2 - CARTR. G1/8" GAS
F4= 2x3/2 NC-NC (= 5/3 OC) Sol.-Sol. + BASE 2 - CARTR. Ø4
F6= 2x3/2 NC-NC (= 5/3 OC) Sol.-Sol. + BASE 2 - CARTR. Ø6
F8= 2x3/2 NC-NC (= 5/3 OC) Sol.-Sol. + BASE 2 - CARTR. Ø8
G2= 2x3/2 NO-NO (= 5/3 PC) Sol.-Sol. + BASE 2 - CARTR. G1/8" GAS
G4= 2x3/2 NO-NO (= 5/3 PC) Sol.-Sol. + BASE 2 - CARTR. Ø4
G6= 2x3/2 NO-NO (= 5/3 PC) Sol.-Sol. + BASE 2 - CARTR. Ø6
G8= 2x3/2 NO-NO (= 5/3 PC) Sol.-Sol. + BASE 2 - CARTR. Ø8
H2= 2x3/2 NC-NO Sol.-Sol. + BASE 2 - CARTR. G1/8" GAS
H4= 2x3/2 NC-NO Sol.-Sol. + BASE 2 - CARTR. Ø4
H6= 2x3/2 NC-NO Sol.-Sol. + BASE 2 - CARTR. Ø6
H8= 2x3/2 NC-NO Sol.-Sol. + BASE 2 - CARTR. Ø8
I2= 2x3/2 NO-NC Sol.-Sol. + BASE 2 - CARTR. G1/8" GAS
I4= 2x3/2 NO-NC Sol.-Sol.+ BASE 2 - CARTR. Ø4
I6= 2x3/2 NO-NC Sol.-Sol. + BASE 2 - CARTR. Ø6
I8= 2x3/2 NO-NC Sol.-Sol. + BASE 2 - CARTR. Ø8
T1= Free valve space plug + BASE 1 - CARTR. G1/8" GAS
T2= Free valve space plug + BASE 2 - CARTR. G1/8" GAS
T3= Free valve space plug + BASE 1 - CARTR. Ø4
T4= Free valve space plug + BASE 2 - CARTR. Ø4
T5= Free valve space plug + BASE 1 - CARTR. Ø6
T6= Free valve space plug + BASE 2 - CARTR. Ø6
T7= Free valve space plug + BASE 1 - CARTR. Ø8
T8= Free valve space plug + BASE 2 - CARTR. Ø8

NOTE:
While configuring the manifold always be careful that the maximum number of electrical signals available is 32.
The use of monostable valve mounted on a base type 2 (2 electrical signals occupied) causes the loss of one electric signal. In this case the monostable valve can be replaced by a bistable valve. The diaphragms plugs are used to intercept the conduits 1,3 & 5 of the base. If it is necessary to interrupt more than one conduit in the same time then put in line the letters which identifies the position (for exemple : regarding the 3 & 5 conduits, put the Y & Z letters).
Should one or more conduits be cut more than one time it is necessary to add the relevant intermediate Supply/Exhaust module.

ACCESSORIES

U2 = Power supply 2 positions module
U4 = Power supply 4 positions module
W = Intermediate supply & exhaust module
X = Diaphragm plug on pipe 1
Y = Diaphragm plug on pipe 3
Z = Diaphragm plug on pipe 5
XY = Diaphragm plug on pipe 1 & 3
ZX = Diaphragm plug on pipe 5 & 1
ZY = Diaphragm plug on pipe 5 & 3
ZXY = Diaphragm plug on pipe 5, 1 & 3

Overall dimensions and technical information are provided solely for informative purposes and may be modified without notice

Overall dimensions and technical information are provided solely for informative purposes and may be modified without notice

Solenoid valves series 3000

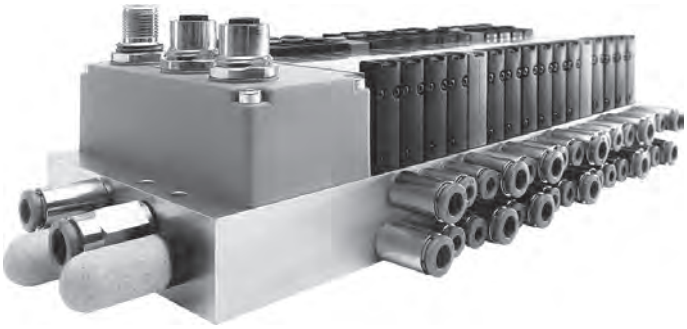

- **10 mm size**
- **Nominal flow rate up to 200 Nl/min**
- **Available sub-base mounted or with M5 threaded ports**
- **The ability to replace valves without disconnecting the pipework**
- **Available with a wide range of serial system protocols**
- **Wide range of accessories**
- **Stand-alone or manifold mounted versions**
- **Suitable for use with pressure or vacuum**

Versatility and maximum reliability: With these prerogatives in mind, new products are being developed dedicated to control in a smarter context. Having the flexibility to be configured within control systems to provide optimal management through a constant interface and communication with the machines control system. The Pneumax 3000 series solenoid valve range has been developed with this in mind and has been developed to suit both stand-alone and manifold mounted applications.

Both stand alone and manifold mounted versions are available in the most commonly used types, capable of working with positive pressures up to 10 Bar or vacuum. The valves have aluminum bodies with integrated electrical connections, manual override and an LED that indicates when the valve is actuated. The Pneumax 3000 series is another addition to the extensive range of solenoid valve systems designed for applications from assembly to automotive.

Construction characteristics	
Body	Aluminium
Operators	Technopolymer
Spool	Aluminium
Seals	NBR
Piston seals	NBR
Springs	AISI 302 stainless steel
Pistons	Aluminium

Operational characteristics	
Voltage	24 VDC ±10%
Pilot power consumption	1.3W nominal in the STAND ALONE version (M8 version 1.3W with energy saving) 1.3W nominal in energy saving mode in the MANIFOLD version.
Valve working pressure [1]	from vacuum to 10 bar max.
Pilot working pressure [12-14]	from 2,5 to 7 bar max.
Operating temperature	from -5°C to +50°C
Fluid	Filtered air. No lubrication needed, if applied it shall be continuous

STAND ALONE solenoid valves version

General

The 10mm solenoid valves range with a flow of 200 Nl/min, is available in STAND ALONE self-feeding or external feeding versions and realised with point to point connections in three different types of interface: with miniature connector type H, with 300mm leads and with an M8 connector with an integrated snap-on fitting.

Main characteristics

10 mm size thick.
Multi-position sub-bases in different lengths.

Functions

S.V. 5/2 Monostable Solenoid-Spring
S.V. 5/2 Monostable Solenoid-Differential (only self feeding)
S.V. 5/2 Bistable Solenoid-Solenoid
S.V. 5/3 C.C. Solenoid-Solenoid
S.V. 2x3/2 N.C.-N.C. (= 5/3 O.C.) Solenoid-Solenoid
S.V. 2x3/2 N.O.-N.O. (= 5/3 P.C.) Solenoid-Solenoid
S.V. 2x3/2 N.C.-N.O. Solenoid-Solenoid
S.V. 2x3/2 N.O.-N.C. Solenoid-Solenoid

Solenoid valve ordering code

3115. 52.00 . 39 . 02

Function
52.00: Solenoid valve 5/2
53.31: Solenoid valve 5 way 3 positions
62.44: 2x Solenoid valve 3/2 N.C.-N.C.
62.55: 2x Solenoid valve 3/2 N.O.-N.O.
62.45: 2x Solenoid valve 3/2 N.C.-N.O.
62.54: 2x Solenoid valve 3/2 N.O.-N.C.

Valves type
36: Solenoid - Differential self-feeding
39: Solenoid - Spring self-feeding
35: Solenoid - Solenoid self-feeding
29: Solenoid - Spring external feeding
25: Solenoid - Solenoid external feeding

Connection
02: H 90° connector
32: 300 mm cables
82: M8 SPEED-UP connector

Example in the table : 3115.52.00.39.02 : Solenoid valve 5/2 solenoid-spring self-feeding, H 90° connector

Overall dimensions and technical information are provided solely for informative purposes and may be modified without notice

Configurator

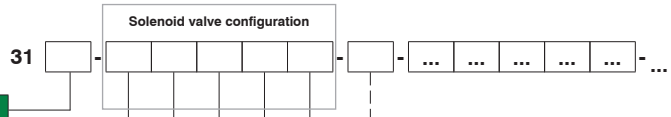

Number of collector positions
02: 2 positions collector
03: 3 positions collector
04: 4 positions collector
05: 5 positions collector
06: 6 positions collector
07: 7 positions collector
08: 8 positions collector
09: 9 positions collector
10: 10 positions collector

Valve type
A: Solenoid valve 5/2 Solenoid-Spring
B: Solenoid valve 5/2 Solenoid-Differential (only self feeding)
C: Solenoid valve 5/2 Solenoid-Solenoid
E: Solenoid valve 5/3 C.C. Solenoid-Solenoid
F: Solenoid valve 2x3/2 N.C.-N.C. (=5/3 O.C.) Solenoid-Solenoid
G: Solenoid valve 2x3/2 N.O.-N.O. (=5/3 P.C.) Solenoid-Solenoid
H: Solenoid valve 2x3/2 N.C.-N.O. Solenoid-Solenoid
I: Solenoid valve 2x3/2 N.O.-N.C. Solenoid-Solenoid

Power supply
2: External feeding
3: Self feeding

Connector type
H: H 90° connector
C: 300 mm cables
M: M8 SPEED UP connector

Voltage
1: 24 VDC

Connections
5: M5

Accessories (optional)
T: Free valve space plug

Accessories (optional) no valve position occupied on the manifold
0X0: Diaphragm plug on pipe 1
00Y: Diaphragm plug on pipe 3
Z00: Diaphragm plug on pipe 5
0XY: Diaphragm plugs on pipes 1 and 3
ZX0: Diaphragm plugs on pipes 5 and 1
Z0Y: Diaphragm plugs on pipes 5 and 3
ZXY: Diaphragm plugs on pipes 5, 1 and 3

Example in the table : 3104-C2H15-T-0X0-A3H15-F3M15
Four-position manifold composed of:
- Solenoid valve 5/2 solenoid-solenoid external feeding, H90° connector, 24 VDC
- Free valve space plug
- Diaphragm plug on pipe 1
- Solenoid valve 5/2 solenoid-spring self-feeding, H90° connector, 24 VDC
- Solenoid valve 2x3/2 N.C.-N.C. (=5/3 O.C.) solenoid-solenoid, M8 SPEED UP connector, 24 VDC

Solenoid-Spring / Solenoid-Differential

Coding: 3115.52.00.Ⓕ.Ⓒ

Ⓕ	FUNCTION
	36=Solenoid-Differential
	39=Solenoid-Spring
Ⓒ	CONNECTIONS
	02=H 90° connector, 24 VDC
	32=300mm cable, 24 VDC
	82=M8 SPEED UP connector 24VDC

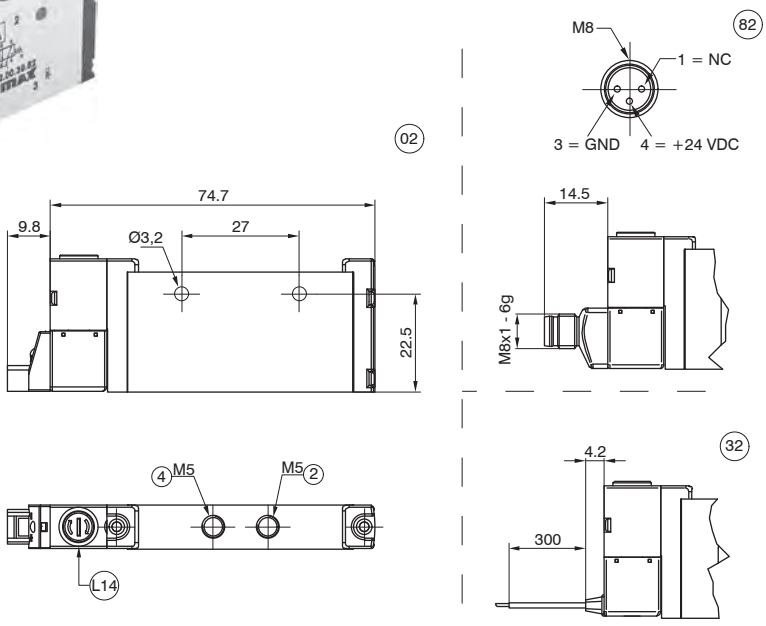

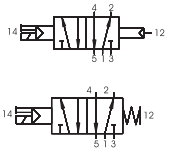

SHORT FUNCTION CODE "A" (39)
SHORT FUNCTION CODE "B" (36)

L14 = Manual over ride - Side 14

Operational characteristics		"Shifting time of pneumatic directional control valves or moving parts, logic devices were measured in accordance to ISO 12238:2001"					
Code	Fluid	Flow rate at 6 bar with Δp=1(Nl/min)	Response time according to ISO 12238, activation time (ms)	Response time according to ISO 12238, deactivation time (ms)	Piloting pressure (bar)	Temperature °C	Weight (g)
3115.52.00.39.Ⓒ Solenoid-Spring	Filtered air. No lubrication needed, if applied it shall be continuous	160	10	20	2,5 - 7	-5 - +50	49
3115.52.00.36.Ⓒ Solenoid-Differential				15			

Solenoid - Solenoid

Coding: 3115.52.00.35.Ⓒ

Ⓒ	CONNECTIONS
	02=H 90° connector, 24 VDC
	32=300mm cable, 24 VDC
	82=M8 SPEED UP connector 24VDC

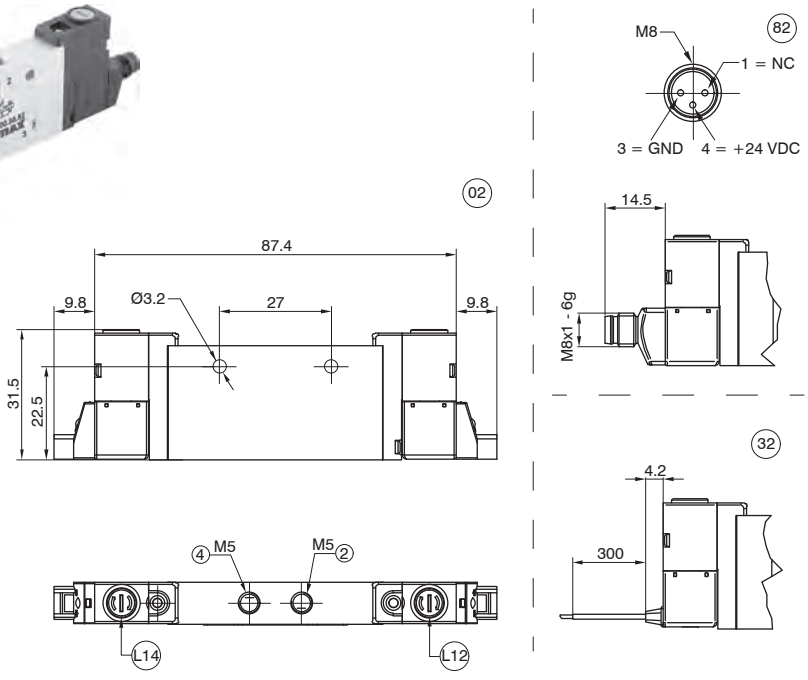

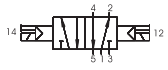

SHORT FUNCTION CODE "C"

L12 = Manual over ride - Side 12
L14 = Manual over ride - Side 14

Operational characteristics		"Shifting time of pneumatic directional control valves or moving parts, logic devices were measured in accordance to ISO 12238:2001"					
Code	Fluid	Flow rate at 6 bar with Δp=1(Nl/min)	Response time according to ISO 12238, activation time (ms)	Response time according to ISO 12238, deactivation time (ms)	Piloting pressure (bar)	Temperature °C	Weight (g)
3115.52.00.35.Ⓒ Solenoid-Differential	Filtered air. No lubrication needed, if applied it shall be continuous	160	10	20	2,5 - 7	-5 - +50	59

Overall dimensions and technical information are provided solely for informative purposes and may be modified without notice

Solenoid - Solenoid (Closed centres)

Coding: 3115.53.31.35.Ⓒ

Ⓒ	CONNECTIONS
	02=H 90° connector, 24 VDC
	32=300mm cable, 24 VDC
	82=M8 SPEED UP connector 24VDC

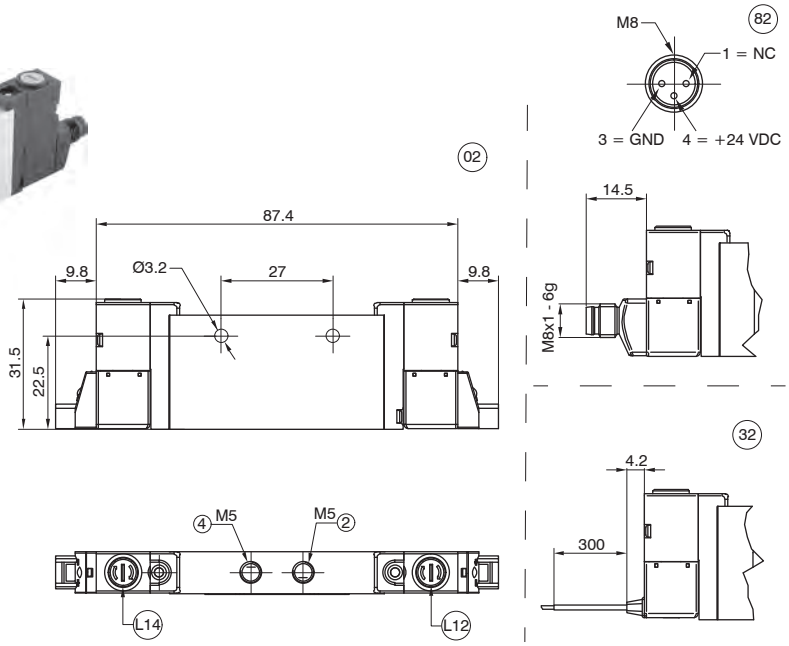

L12 = Manual over ride - Side 12
L14 = Manual over ride - Side 14

SHORT FUNCTION CODE "E"

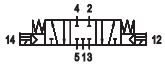

Operational characteristics		"Shifting time of pneumatic directional control valves or moving parts, logic devices were measured in accordance to ISO 12238:2001"					
Code	Fluid	Flow rate at 6 bar with Δp=1(Nl/min)	Response time according to ISO 12238, activation time (ms)	Response time according to ISO 12238, deactivation time (ms)	Piloting pressure (bar)	Temperature °C	Weight (g)
3115.53.31.35.Ⓒ Solenoid-Solenoid (Closed centres)	Filtered air. No lubrication needed, if applied it shall be continuous	150	10	20	2,5 - 7	-5 - +50	59

Solenoid - Solenoid 2x3/2

Coding: 3115.62.Ⓕ.35.Ⓒ

Ⓕ	FUNCTION
	44=NC-NC (5/3 Open centres)
	45=NC-NO
	55=NO-NO (5/3 Pressured centres)
	54=NO-NC
Ⓒ	CONNECTIONS
	02=H 90° connector, 24 VDC
	32=300mm cable, 24 VDC
	82=M8 SPEED UP connector 24VDC

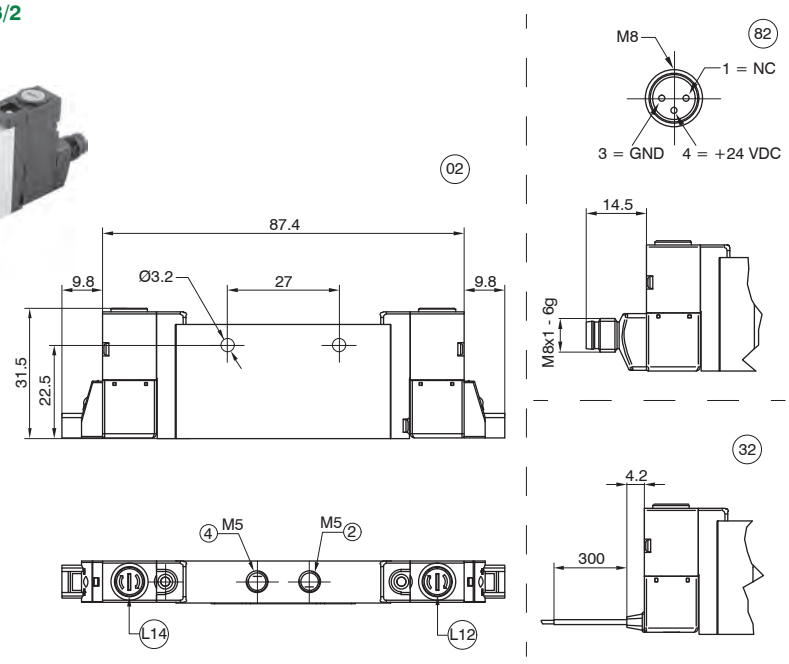

L12 = Manual over ride - Side 12
L14 = Manual over ride - Side 14

SHORT FUNCTION CODE:
NC-NC (5/3 Open centres)="F"
NO-NAO(5/3 Pressured centres)="G"
NC-NO="H"
NO-NC="I"

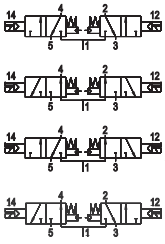

Operational characteristics		"Shifting time of pneumatic directional control valves or moving parts, logic devices were measured in accordance to ISO 12238:2001"					
Code	Fluid	Flow rate at 6 bar with Δp=1(Nl/min)	Response time according to ISO 12238, activation time (ms)	Response time according to ISO 12238, deactivation time (ms)	Piloting pressure (bar)	Temperature °C	Weight (g)
3115.62.44.35.Ⓒ NC-NC (5/3 Open centres)	Filtered air. No lubrication needed, if applied it shall be continuous	150	10	15	2,5 - 7	-5 - +50	59,4
3115.62.55.35.Ⓒ NO-NO (5/3 Pressured centres)							
3115.62.45.35.Ⓒ NC-NO							
3115.62.54.35.Ⓒ NO-NC							

Solenoid-Spring

Coding: 3115.52.00.29.Ⓒ

	CONNECTIONS
Ⓒ	02=H 90° connector, 24 VDC
	32=300mm cable, 24 VDC
	82=M8 SPEED UP connector 24VDC

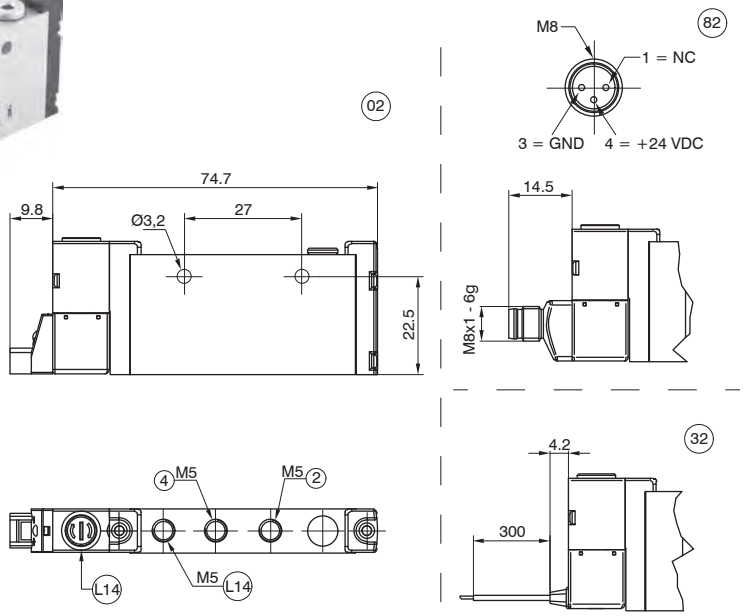

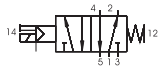

SHORT FUNCTION CODE "A" (29)

L12 = Manual over ride - Side 12
L14 = Manual over ride - Side 14

Operational characteristics		"Shifting time of pneumatic directional control valves or moving parts, logic devices were measured in accordance to ISO 12238:2001"						
Code	Fluid	Flow rate at 6 bar with Δp=1(Nl/min)	Response time according to ISO 12238, activation time (ms)	Response time according to ISO 12238, deactivation time (ms)	Working pressure (bar)	Piloting pressure (bar)	Temperature °C	Weight (g)
3115.52.00.29.Ⓒ Solenoid-Spring	Filtered air. No lubrication needed, if applied it shall be continuous	160	10	20	From vacuum to 10	2,5 - 7	-5 - +50	49

Solenoid - Solenoid

Coding: 3115.52.00.25.Ⓒ

	CONNECTIONS
Ⓒ	02=H 90° connector, 24 VDC
	32=300mm cable, 24 VDC
	82=M8 SPEED UP connector 24VDC

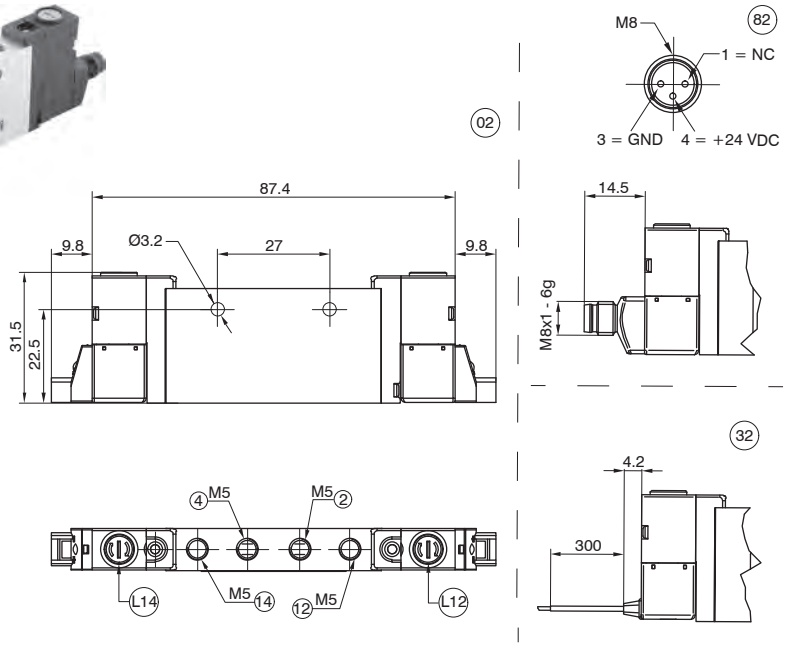

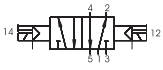

SHORT FUNCTION CODE "C"

L12 = Manual over ride - Side 12
L14 = Manual over ride - Side 14

Operational characteristics		"Shifting time of pneumatic directional control valves or moving parts, logic devices were measured in accordance to ISO 12238:2001"						
Code	Fluid	Flow rate at 6 bar with Δp=1(Nl/min)	Response time according to ISO 12238, activation time (ms)	Response time according to ISO 12238, deactivation time (ms)	Working pressure (bar)	Piloting pressure (bar)	Temperature °C	Weight (g)
3115.52.00.25.Ⓒ Solenoid-Solenoid	Filtered air. No lubrication needed, if applied it shall be continuous	160	10	10	From vacuum to 10	2,5 - 7	-5 - +50	59

Overall dimensions and technical information are provided solely for informative purposes and may be modified without notice

Solenoid - Solenoid 5/3 (Closed centres)

Coding: 3115.53.31.25.Ⓒ

Ⓒ	CONNECTIONS
	02=H 90° connector, 24 VDC
	32=300mm cable, 24 VDC
	82=M8 SPEED UP connector 24VDC

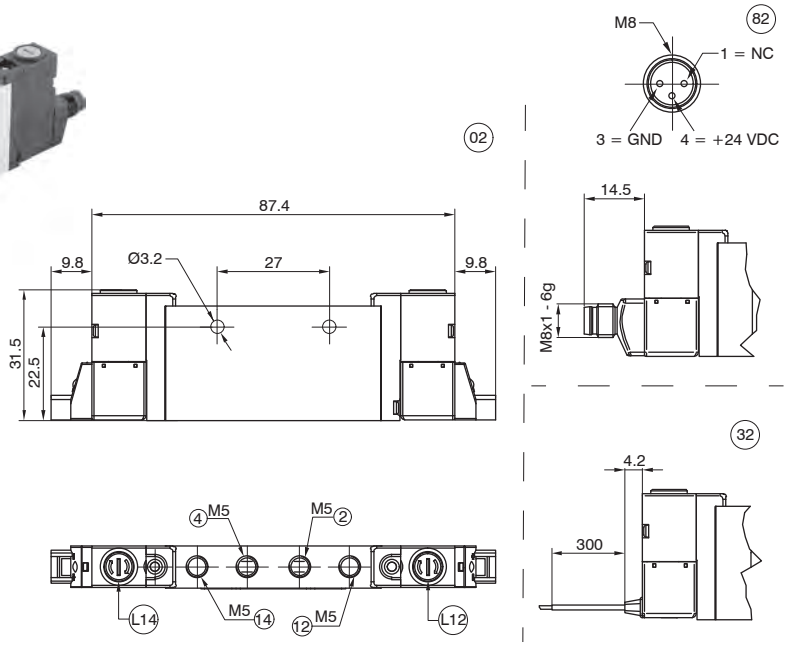

L12 = Manual over ride - Side 12
L14 = Manual over ride - Side 14

SHORT FUNCTION CODE "E"

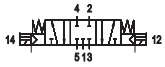

Operational characteristics		"Shifting time of pneumatic directional control valves or moving parts, logic devices were measured in accordance to ISO 12238:2001"						
Code	Fluid	Flow rate at 6 bar with Δp=1(Nl/min)	Response time according to ISO 12238, activation time (ms)	Response time according to ISO 12238, deactivation time (ms)	Working pressure (bar)	Piloting pressure (bar)	Temperature °C	Weight (g)
3115.53.31.25.Ⓒ Solenoid-Solenoid 5/3 (Closed centres)	Filtered air. No lubrication needed, if applied it shall be continuous	150	10	20	From vacuum to 10	2,5 - 7	-5 - +50	59

Solenoid - Solenoid 2x3/2

Coding: 3115.62.Ⓕ.25.Ⓒ

Ⓕ	FUNCTION
	44=NC-NC (5/3 Open centres)
	45=NC-NO
	55=NO-NO (5/3 Pressed centres)
	54=NO-NC
Ⓒ	CONNECTIONS
	02=H 90° connector, 24 VDC
	32=300mm cable, 24 VDC
	82=M8 SPEED UP connector 24VDC

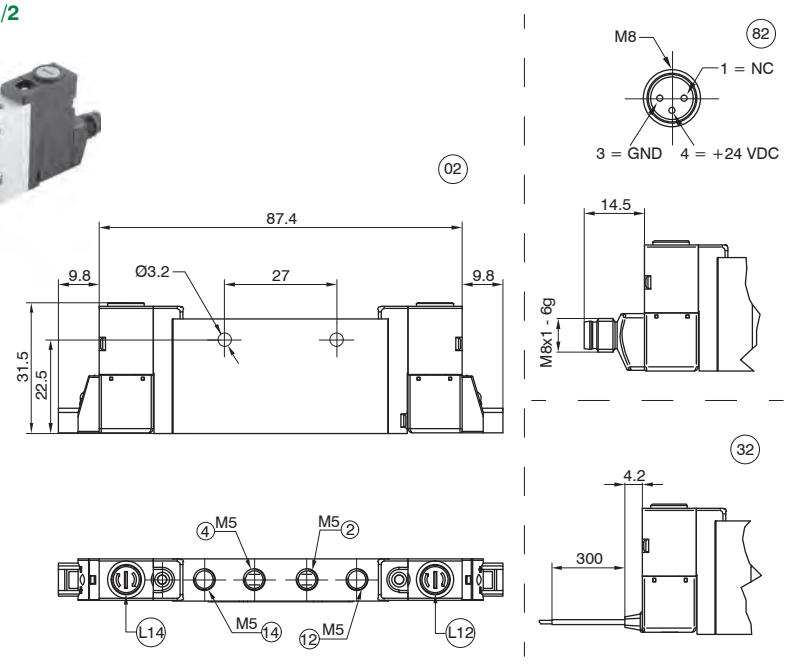

L12 = Manual over ride - Side 12
L14 = Manual over ride - Side 14

SHORT FUNCTION CODE:
NC-NC (5/3 Open centres)="F"
NO-NO (5/3 Pressed centres)="G"
NC-NO="H"
NO-NC="I"

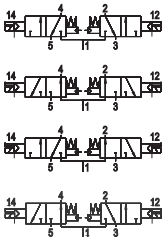

Operational characteristics		"Shifting time of pneumatic directional control valves or moving parts, logic devices were measured in accordance to ISO 12238:2001"						
Code	Fluid	Flow rate at 6 bar with Δp=1(Nl/min)	Response time according to ISO 12238, activation time (ms)	Response time according to ISO 12238, deactivation time (ms)	Working pressure (bar)	Piloting pressure (bar)	Temperature °C	Weight (g)
3115.62.44.25.Ⓒ NC-NC (5/3 Open centres)	Filtered air. No lubrication needed, if applied it shall be continuous	150	10	15	From vacuum to 10	≥3+ (02x Inlet press.)	-5 - +50	59,4
3115.62.55.25.Ⓒ NO-NO (5/3 Pressed centres)								
3115.62.45.25.Ⓒ NC-NO								
3115.62.54.25.Ⓒ NO-NC								

Manifold

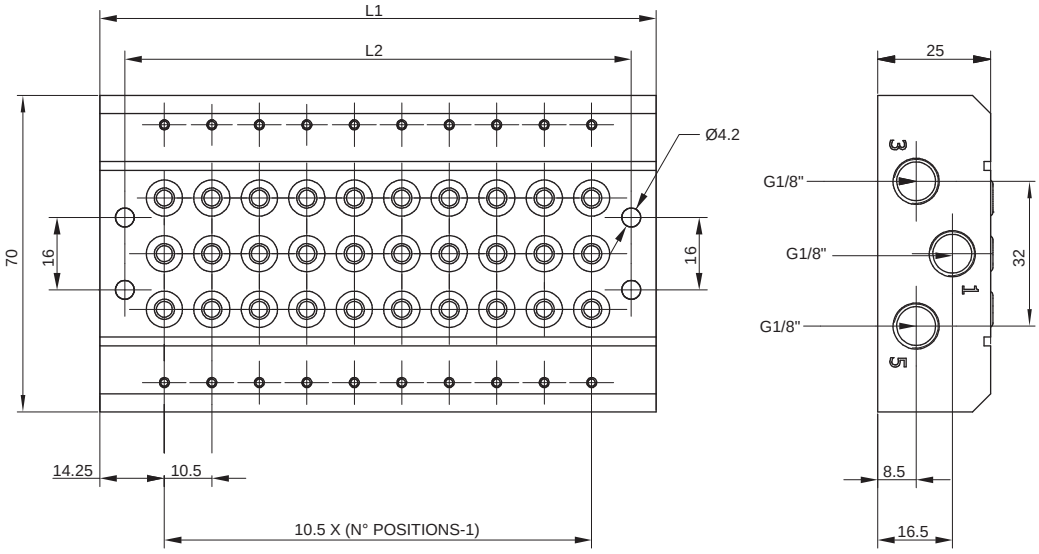

Coding: 3115.Ⓟ

Ⓟ	POSITIONS	L1	L2
	02=2 POSITIONS (weight 150 g)	39	29
	03=3 POSITIONS (weight 200 g)	49,5	39,5
	04=4 POSITIONS (weight 250 g)	60	50
	05=5 POSITIONS (weight 300 g)	70,5	60,5
	06=6 POSITIONS (weight 350 g)	81	71
	07=7 POSITIONS (weight 400 g)	91,5	81,5
	08=8 POSITIONS (weight 450 g)	102	92
	09=9 POSITIONS (weight 500 g)	112,5	102,5
	10=10 POSITIONS (weight 550 g)	123	113

Assembling kit

Coding: 3115.KV

Weight 2 g

Closing plate

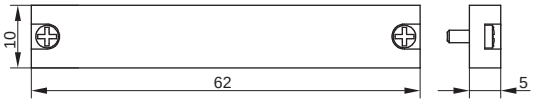

Coding: 3115.00

Weight 10 g

Diaphragm plug

Coding: 3130.17

Weight 1,5 g

Overall dimensions and technical information are provided solely for informative purposes and may be modified without notice

Solenoid valve description

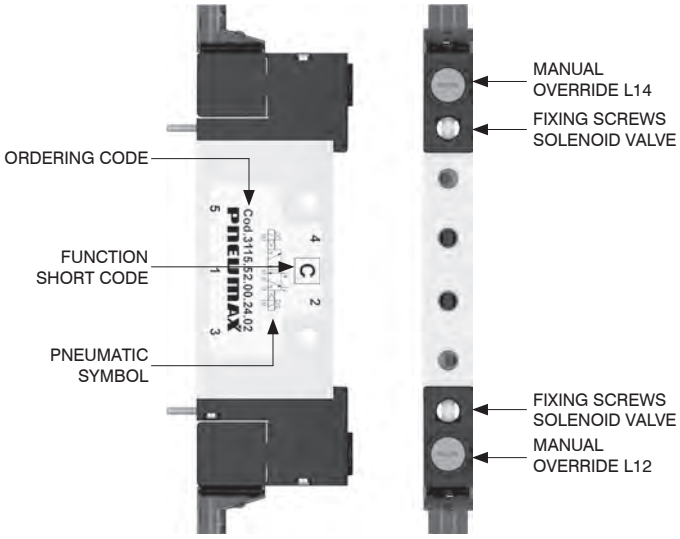

From the top

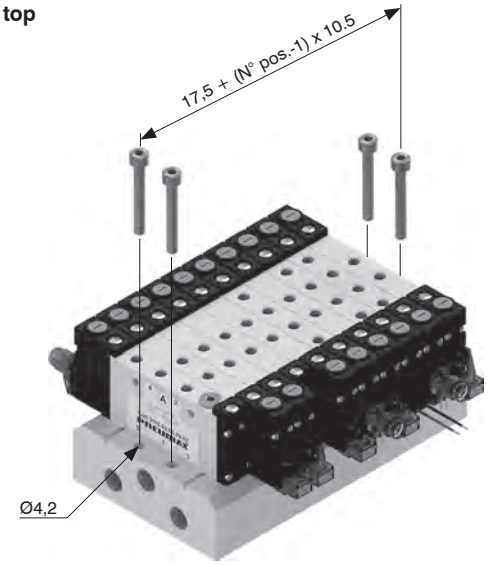

DIN rail fixing

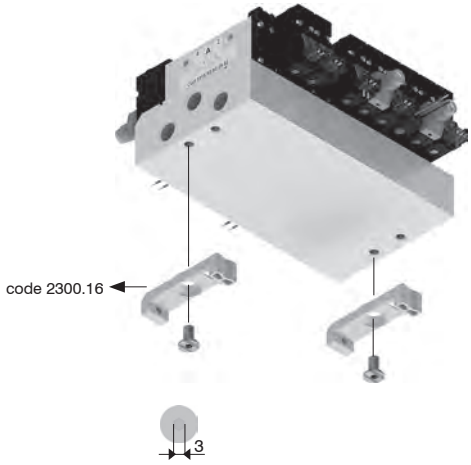

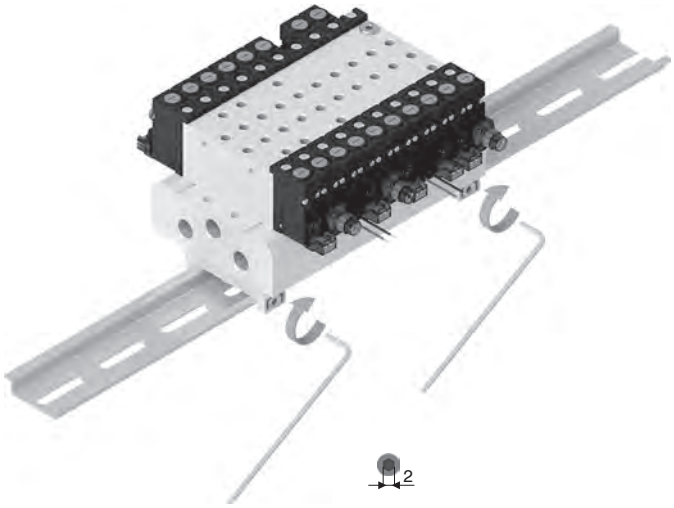

Supply ports and maximum possible size according to valves used

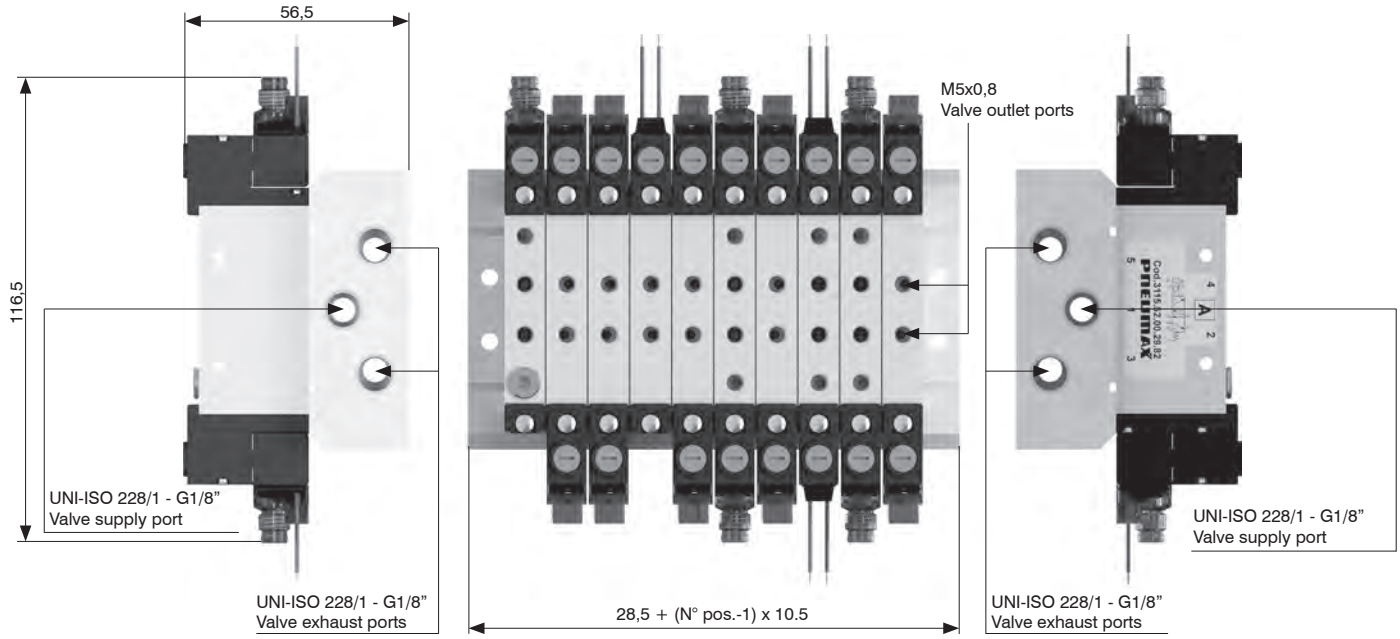

Manual override actuation

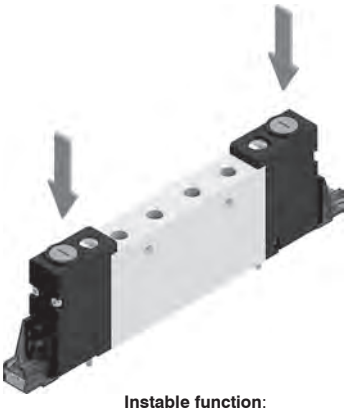

Instable function:
Push to actuate
(when released it moves back
to the original position)

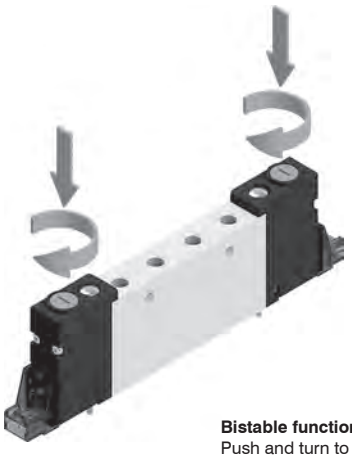

Bistable function:
Push and turn to get the bistable
function

Note: it is strongly suggested to replace the original position after using

Solenoid valves installation

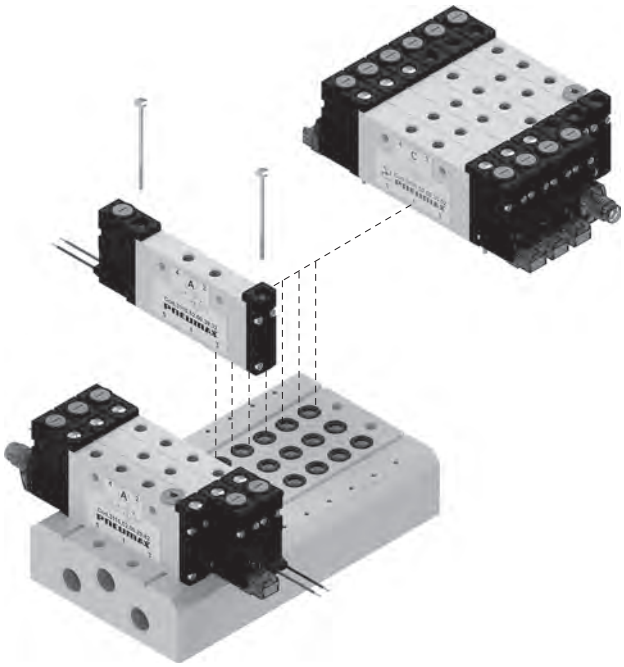

Max. torque moment: 0,2 Nm

Overall dimensions and technical information are provided solely for informative purposes and may be modified without notice

MANIFOLD version

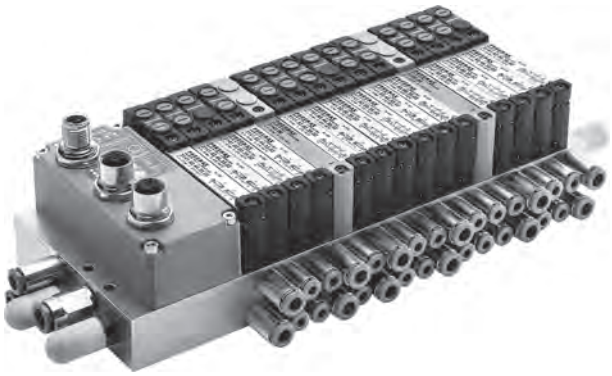

General

The range of solenoid valves, dedicated to the assembly sector in pre-configured manifold, is available in multipolar and serial versions, thanks to a vast choice of connectors and analogue and digital input and output accessories. The compact and clean design of both the valve body and the manifold, each one produced in aluminium, allows their use in applications requiring space optimisation and weight reduction without sacrificing the reliability and the characteristics of aluminium. The multipolar version is available in three different types of connections:

- SUB-D 25 poles equipped with 24 outputs and configurable in different lengths up to manifolds with a maximum of 12 bistable valve positions
- SUB-D 37 poles equipped with 32 outputs and configurable in different lengths up to manifolds with a maximum of 16 bistable valve positions
- SUB-D 25 poles HD (44 poles) equipped with 40 outputs and configurable in different lengths up to manifolds with a maximum of 20 bistable valve positions

Every one of these options covers the wide range of application requirements and provides electronic management by default capable of energy saving on individual coils and managing PNP and NPN connections automatically without any difference in installation for the end user.
Precisely in order to guarantee maximum versatility in integration in different machines and applications, the 3000 series valves in the serial version are designed to interface with all the main communication protocols: CANopen®, EtherCAT®, PROFINET IO RT/IRT, EtherNet/IP, Powerlink, PROFIBUS DP and IO-Link.
Each manifold has also been thought out in order to be extremely flexible in the management or addition of further outputs through the use of a sub-base system that expands the main manifold.
This system of sub-bases can be connected through the use of a specific kit of connecting pins which can be repeated modularly until reaching the maximum number of outputs managed by the serial protocol used.
Taking advantage of the expansion of the output signals it is possible to connect other components to manage, for example, proportional pressure regulation or to control other solenoid valves.
With the same system it is also possible to connect a series of modules to the main manifold dedicated to the management of input signals up to the maximum number of inputs manageable by the specific serial node used.
In fact, input modules with different interfaces and different technologies have been provided, that is: modules with eight digital inputs with M8 or M12 connection or; analogue or voltage input modules with M8 connection interface.
The strong point of this system is the possibility to configure the series of input and output modules freely giving the advantage of installation flexibility.

Main characteristics

10 mm size thick.
Multi-position sub-bases in different lengths.
Integrated and optimized electrical connection as standard

Functions

S.V. Monostable Solenoid-Spring
S.V. Monostable Solenoid-Differential
S.V. 5/2 Bistable Solenoid-Solenoid
S.V. 5/3 C.C. Solenoid-Solenoid
S.V. 2x3/2 N.C.-N.C. (= 5/3 O.C.) Solenoid-Solenoid
S.V. 2x3/2 N.O.-N.O. (= 5/3 P.C) Solenoid-Solenoid
S.V. 2x3/2 N.C.-N.O. Solenoid-Solenoid
S.V. 2x3/2 N.O.-N.C. Solenoid-Solenoid

Configurator

31 [ ] [ ] [ ] ... [ ] ...

Power supply
A: Self-feeding
E: External feeding

Electric connection
MP2: 25 poles multipoint module
MP3: 37 poles multipoint module
MP4: 44 poles HD multipoint module
C3: CANopen® module 64 IN - 64 OUT (32 fixed)
C4: CANopen® module 64 IN - 64 OUT (48 fixed)
P3: PROFIBUS DP module 64 IN - 64 OUT (32 fixed)
P4: PROFIBUS DP module 64 IN - 64 OUT (48 fixed)
I4: EtherNet/IP module 128 IN - 128 OUT (48 fixed)
A4: EtherCAT® module 128 IN - 128 OUT (48 fixed)
N4: PROFINET IO RT/IRT module 128 IN - 128 OUT (48 fixed)
K3: IO-Link module 64 IN - 64 OUT (32 fixed)
K4: IO-Link module 64 IN - 64 OUT (48 fixed)

Inputs module - Analog / Digital (Optional)
D8: 8 M8 digital inputs module
D12: 8 M12 digital inputs module
D3: 32 digital inputs SUB-D 37 pins
T1: 2 analogue inputs 0-5V module (voltage signal)
T2: 2 analogue inputs 0-10V module (voltage signal)
T3: 4 analogue inputs 0-5V module (voltage signal)
T4: 4 analogue inputs 0-10V module (voltage signal)
C1: 2 analogue inputs 0-20mA module (current signal)
C2: 2 analogue inputs 4-20mA module (current signal)
C3: 4 analogue inputs 0-20mA module (current signal)
C4: 4 analogue inputs 4-20mA module (current signal)
P1: 2 Pt100 2 wires inputs module
P2: 2 Pt100 3 wires inputs module
P3: 2 Pt100 4 wires inputs module
P4: 4 Pt100 2 wires inputs module
P5: 4 Pt100 3 wires inputs module
P6: 4 Pt100 4 wires inputs module
Outputs module - Analog / Digital (Optional)
M8: 8 M8 digital outputs module
M12: 8 M12 digital outputs module
M3: 32 digital outputs SUB-D 37 pins
V1: 2 analogue outputs 0-5V module (voltage signal)
V2: 2 analogue outputs 0-10V module (voltage signal)
V3: 4 analogue outputs 0-5V module (voltage signal)
V4: 4 analogue outputs 0-10V module (voltage signal)
L1: 2 analogue outputs 0-20mA module (current signal)
L2: 2 analogue outputs 4-20mA module (current signal)
L3: 4 analogue outputs 0-20mA module (current signal)
L4: 4 analogue outputs 4-20mA module (current signal)
Additional power supply module (Optional)
P12: M12 additional power supply module
J0: Optional position module

Valves type
A: Solenoid valve 5/2 Solenoid - Spring
B: Solenoid valve 5/2 Solenoid - Differential
C: Solenoid valve 5/2 Solenoid - Solenoid
E: Solenoid valve 5/3 C.C. Solenoid - Solenoid
F: Solenoid valve 2X3/2 N.C.-N.C. (=5/3 O.C.) Solenoid - Solenoid
G: Solenoid valve 2X3/2 N.O.-N.O. (=5/3 P.C.) Solenoid - Solenoid
H: Solenoid valve 2X3/2 N.C.-N.O. Solenoid - Solenoid
I: Solenoid valve 2X3/2 N.O.-N.C. Solenoid - Solenoid
T: Closing plate
X: Diaphragm plug on pipe 1
Y: Diaphragm plug on pipe 3
Z: Diaphragm plug on pipe 5
W: Intermediate supply and exhaust module

Overall dimensions and technical information are provided solely for informative purposes and may be modified without notice

Configuration examples

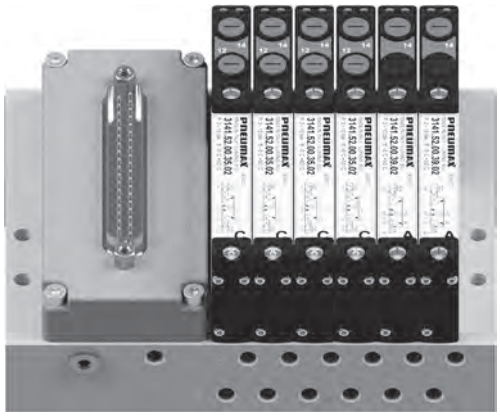

Example shown : 31EMP3CCCCAA
Manifold with external feeding, multipolar; 37 poles and solenoid valves.

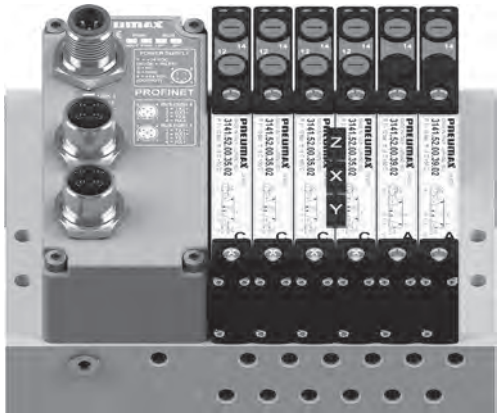

Example shown : 31EN4CCCXYZCAA
Manifold with external feeding, serial module, solenoid valves and diaphragm plugs.

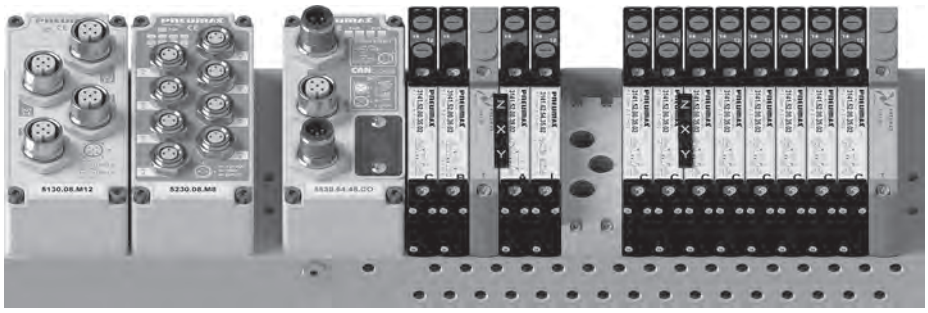

Example shown : 31EC4D8M12CBTXYZAIWCCXYZCCCCCCT
Manifold with external feeding, serial module, M8 input module, M12 output module; solenoid valves, multi-position diaphragm plugs, additional power supply module.

Example shown : 31AC4D8D8M12JØCBIIIITT
Self-feeding manifold with serial module, M8 input module, M12 output module, optional position module, solenoid valves.

Solenoid - Spring / Solenoid - Differential

Coding: 3141.52.00.Ⓕ.Ⓒ

Ⓕ	FUNCTION
	36=Solenoid - Differential
	39=Solenoid-Spring
Ⓒ	CONNECTIONS
	02=24VDC

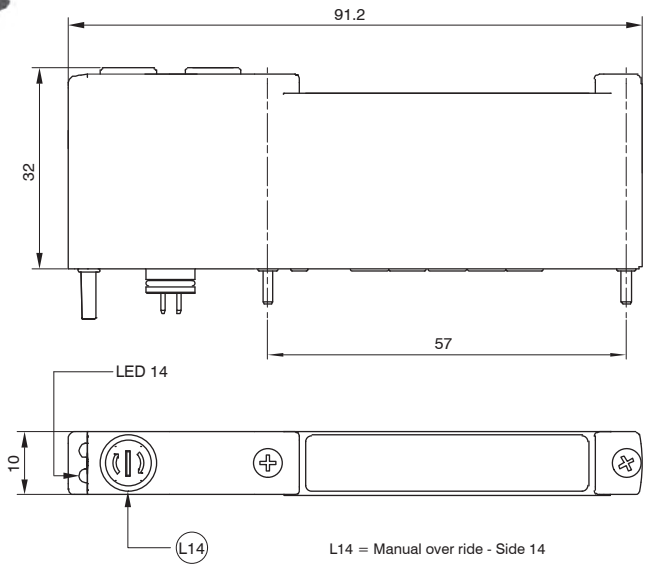

L14 = Manual over ride - Side 14

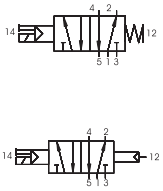

SHORT FUNCTION CODE "A" (39)
SHORT FUNCTION CODE "B" (36)

Operational characteristics		"Shifting time of pneumatic directional control valves or moving parts, logic devices were measured in accordance to ISO 12238:2001"						
Code	Fluid	Flow rate at 6 bar with Δp=1(Nl/min)	Response time according to ISO 12238, activation time (ms)	Response time according to ISO 12238, deactivation time (ms)	Working pressure (bar)	Piloting pressure (bar)	Temperature °C	Weight (g)
3141.52.00.39.Ⓒ Solenoid-Spring	Filtered air. No lubrication needed, if applied it shall be continuous	200	10	20	From vacuum to 10	2,5 - 7	-5 - +50	55,7
3141.52.00.36.Ⓒ Solenoid-Differential								

Solenoid - Solenoid

Coding: 3141.52.00.35.Ⓒ

Ⓒ	CONNECTIONS
	02=24VDC

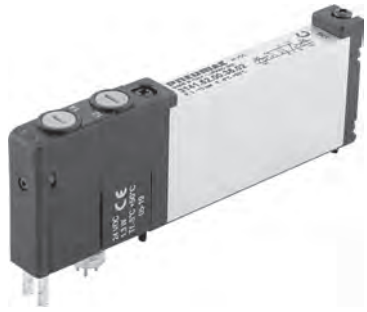

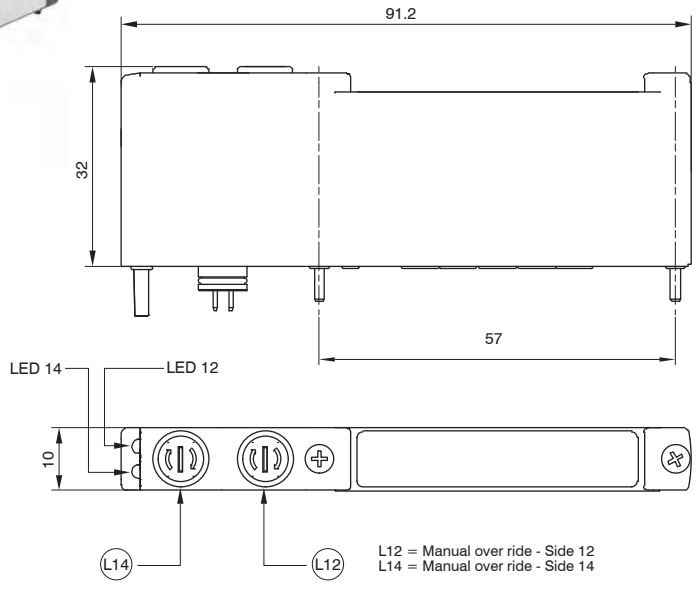

L12 = Manual over ride - Side 12
L14 = Manual over ride - Side 14

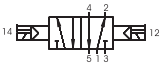

SHORT FUNCTION CODE "C"

Operational characteristics		"Shifting time of pneumatic directional control valves or moving parts, logic devices were measured in accordance to ISO 12238:2001"						
Code	Fluid	Flow rate at 6 bar with Δp=1(Nl/min)	Response time according to ISO 12238, activation time (ms)	Response time according to ISO 12238, deactivation time (ms)	Working pressure (bar)	Piloting pressure (bar)	Temperature °C	Weight (g)
3141.52.00.35.Ⓒ Solenoid-Solenoid	Filtered air. No lubrication needed, if applied it shall be continuous	200	10	10	From vacuum to 10	2,5 - 7	-5 - +50	55,7

Overall dimensions and technical information are provided solely for informative purposes and may be modified without notice

Solenoid - Solenoid 5/3 (Closed centres)

Coding: 3141.53.31.35.Ⓒ

Ⓒ	CONNECTIONS
	02=24VDC

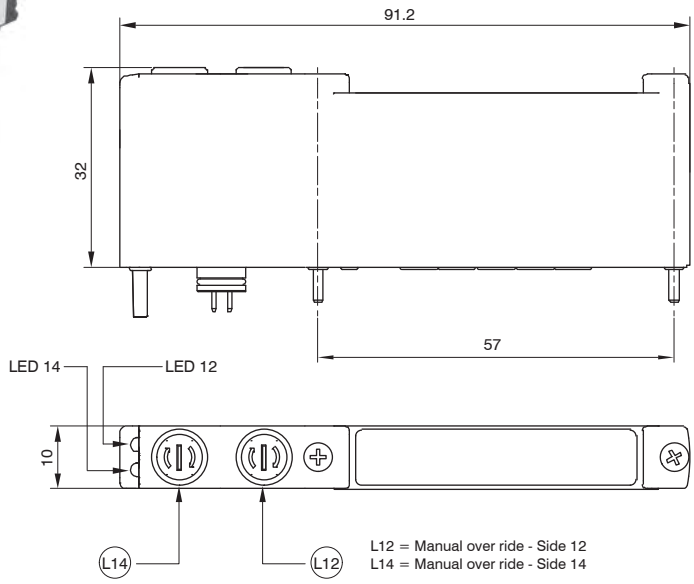

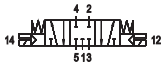

SHORT FUNCTION CODE "E"

Operational characteristics		"Shifting time of pneumatic directional control valves or moving parts, logic devices were measured in accordance to ISO 12238:2001"						
Code	Fluid	Flow rate at 6 bar with Δp=1(Nl/min)	Response time according to ISO 12238, activation time (ms)	Response time according to ISO 12238, deactivation time (ms)	Working pressure (bar)	Piloting pressure (bar)	Temperature °C	Weight (g)
3141.53.31.35.Ⓒ Solenoid-Solenoid 5/3 (Closed centres)	Filtered air. No lubrication needed, if applied it shall be continuous	170	10	20	From vacuum to 10	2,5 - 7	-5 - +50	60,3

Solenoid - Solenoid 2x3/2

Coding: 3141.62.Ⓕ.35.Ⓒ

Ⓕ	FUNCTION
	44=NC-NC (5/3 Open centres)
	45=NC-NO
	55=NO-NO 5/3 (Pressured centres)
	54=NO-NC
Ⓒ	CONNECTIONS
	02=24VDC

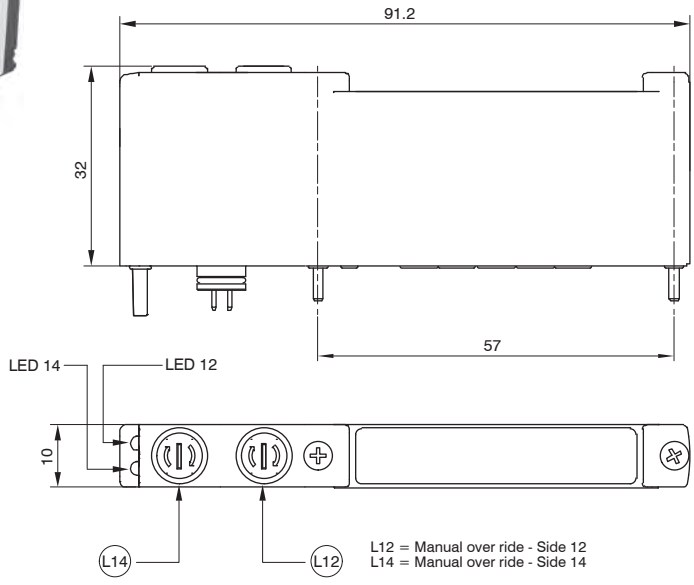

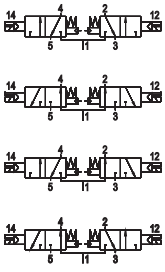

SHORT FUNCTION CODE:
NC-NC (5/3 Open centres)="F"
NO-NO (5/3 Pressured centres)="G"
NC-NO="H"
NO-NC="I"

Operational characteristics		"Shifting time of pneumatic directional control valves or moving parts, logic devices were measured in accordance to ISO 12238:2001"						
Code	Fluid	Flow rate at 6 bar with Δp=1(Nl/min)	Response time according to ISO 12238, activation time (ms)	Response time according to ISO 12238, deactivation time (ms)	Working pressure (bar)	Piloting pressure (bar)	Temperature °C	Weight (g)
3141.62.44.35.Ⓒ NC-NC (5/3 Open centres)	Filtered air. No lubrication needed, if applied it shall be continuous	170	10	15	From vacuum to 10	≥3+ (02x Inlet press.)	-5 - +50	60,7
3141.62.45.35.Ⓒ NC-NO								
3141.62.55.35.Ⓒ NO-NO (5/3 Pressured centres)								
3141.62.54.35.Ⓒ NO-NC								

Multipoint module

Codifica: 3140.00.Ⓒ

Ⓒ	ELECRICAL CONNECTIONS
	25P=Connector 25 poles
	37P=Connector 37 poles
	44P=Connector 44 poles

Operational characteristics			
Code	3140.00.25P (25 poles)	3140.00.37P (37 poles)	3140.00.44P (44 poles)
Temperature °C	-5 - +50		
Weight (g)	47,4	51,3	49,1

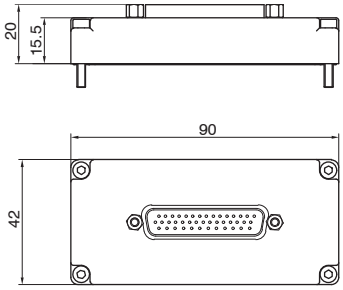

25 POLES MULTIPOINT MODULE
12 SOLENOID VALVES
PNP OR NPN SELF CONFIGURING
ENERGY SAVING

25P CONNECTOR PINOUT

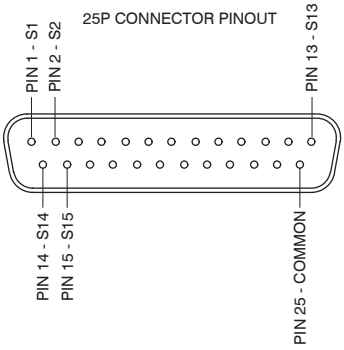

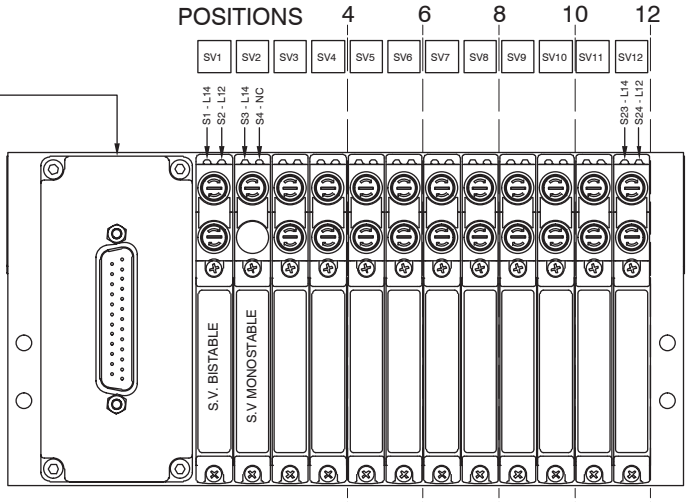

37 POLES MULTIPOINT MODULE
16 SOLENOID VALVES
PNP OR NPN SELF CONFIGURING
ENERGY SAVING

37P CONNECTOR PINOUT

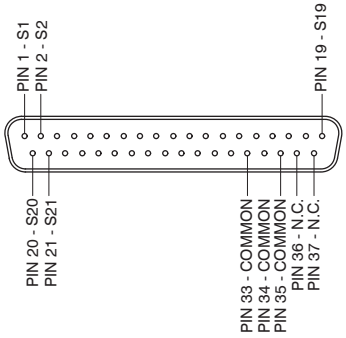

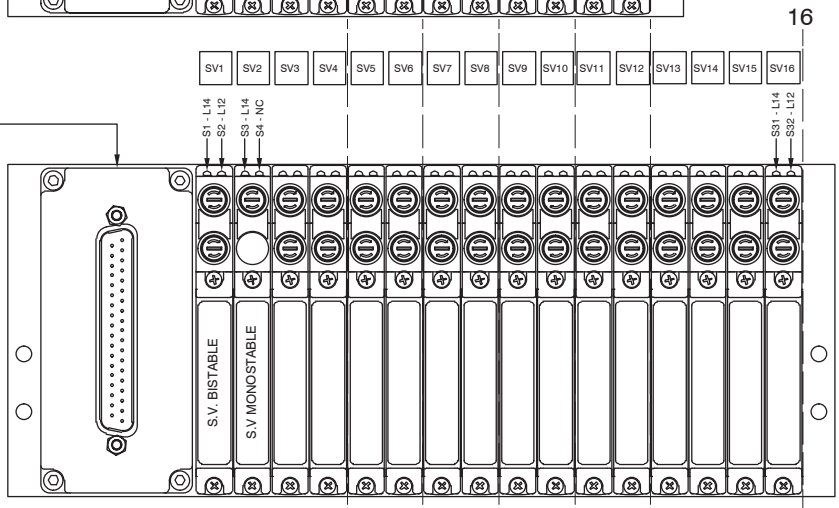

44 POLES MULTIPOINT MODULE
20 SOLENOID VALVES
PNP OR NPN SELF CONFIGURING
ENERGY SAVING

44P CONNECTOR PINOUT

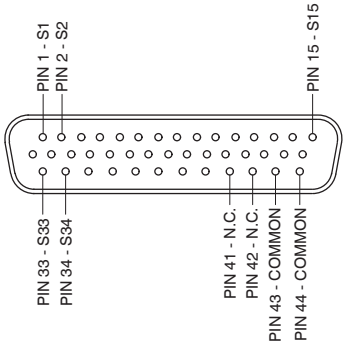

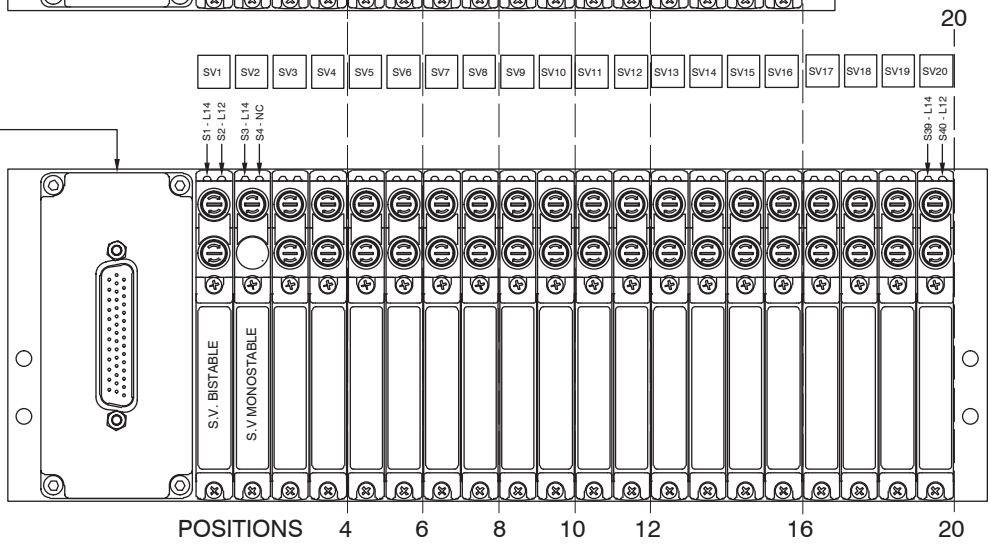

Overall dimensions and technical information are provided solely for informative purposes and may be modified without notice

DIN rail adapter

Coding: 2300.16

Weight 12 g

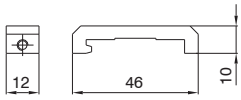

Fitting M5 Ø6

Coding: RDR560

Weight 7 g

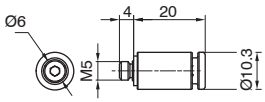

Free valve space plug

Coding: 3140.00

Weight 21 g

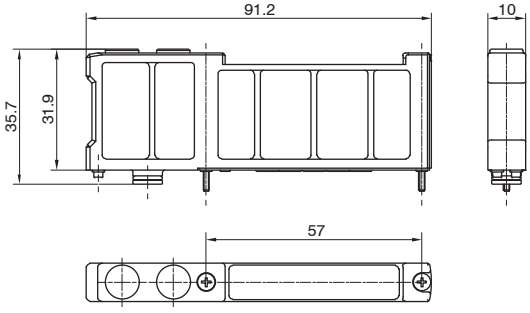

Inlet/Exhaust module

Coding: 3140.10

Weight 50 g

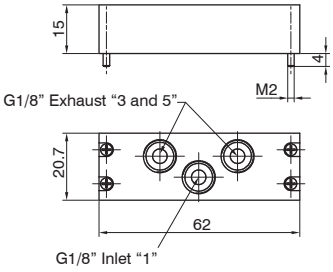

Diaphragm plug

Coding: 3130.17

Weight 1,5 g

Diaphragm plug installation

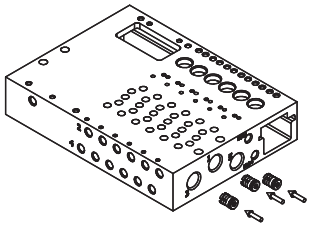

Diaphragm plug fixing

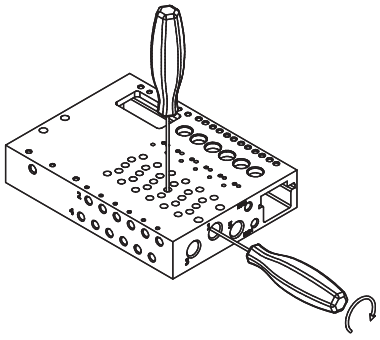

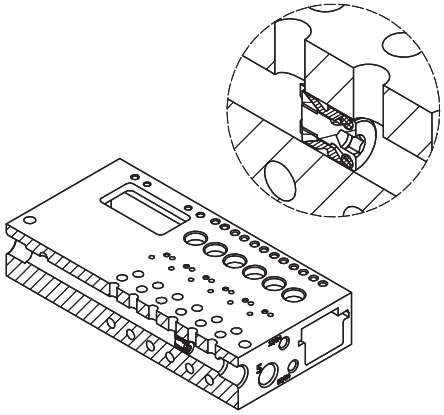

Cable complete with connector, 25 poles, IP65

Coding: 2300.25.Ⓛ.Ⓒ

Ⓛ	CABLE LENGTH
	03=3 meters
	05=5 meters
	10=10 meters
Ⓒ	CONNECTORS
	10=In line
	90=90° angle

Cable complete with connector 37 poles, IP65

Coding: 2400.37.Ⓛ.Ⓒ

Ⓛ	CABLE LENGTH
	03=3 meters
	05=5 meters
	10=10 meters
Ⓒ	CONNECTORS
	10=In line
	90=90° angle

Cable complete with connector 44 poles, IP65

Coding: 2300.44.Ⓛ.Ⓒ

Ⓛ	CABLE LENGTH
	03=3 meters
	05=5 meters
	10=10 meters
Ⓒ	CONNECTORS
	10=In line
	90=90° angle

Overall dimensions and technical information are provided solely for informative purposes and may be modified without notice

Manifold

Coding: 3145.Ⓥ.Ⓟ

Ⓥ	VERSION		
	02 = External feeding		
	12= Self feeding		
Ⓟ	POSITIONS	L1	L2
	04=4 Positions (weight 432 g)	103	94
	06=6 Positions (weight 518 g)	124	115
	08=8 Positions (weight 604 g)	145	136
	10=10 Positions (weight 690 g)	166	157
	12=12 Positions (weight 776 g)	187	178
	16=16 Positions (weight 948 g)	229	220
	20=20 Positions (weight 1120 g)	271	262
	24=24 Positions (weight 1280 g)	313	304

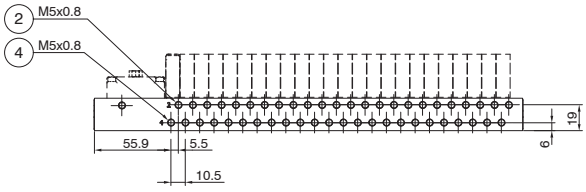

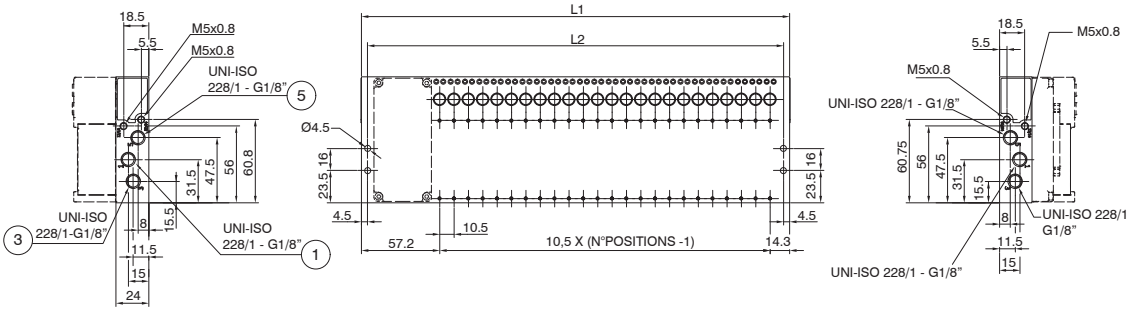

Manifold with accessories

Coding: 3145.Ⓥ.Ⓟ.Ⓐ

1 = Inlet port G1/8"
2 and 4 = Outlet port M5
3 and 5 = Exhaust port G1/8"

Ⓥ	VERSION		
	02 = External feeding		
	12= Self feeding		
Ⓟ	POSITIONS	L1	L2
	04=4 Positions (weight 432 g)	103	94
	06=6 Positions (weight 518 g)	124	115
	08=8 Positions (weight 604 g)	145	136
	10=10 Positions (weight 690 g)	166	157
	12=12 Positions (weight 776 g)	187	178
	16=16 Positions (weight 948 g)	229	220
	20=20 Positions (weight 1120 g)	271	262
	24=24 Positions (weight 1280 g)	313	304
Ⓐ	ACCESSORIES		
	01= 1 optional position		
	02= 2 optional positions		
	04= 4 optional positions		
	08= 8 optional positions		
	12= 12 optional positions		

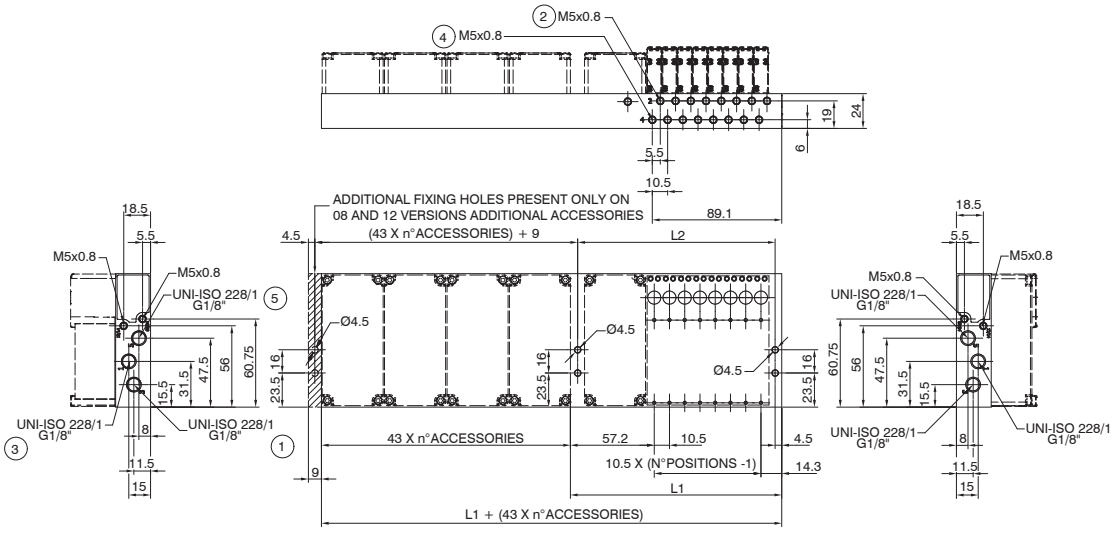

Solenoid valve description

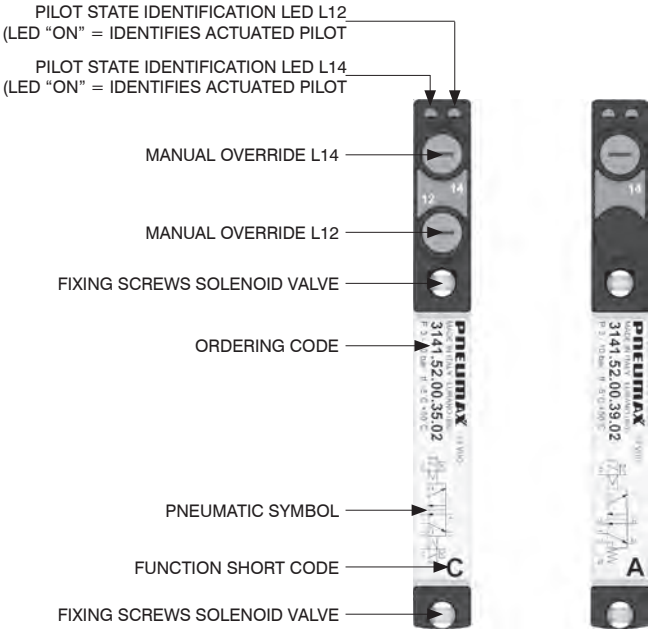

From the top

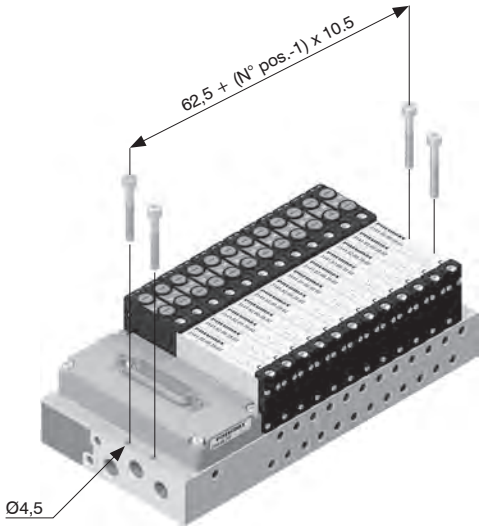

DIN rail fixing

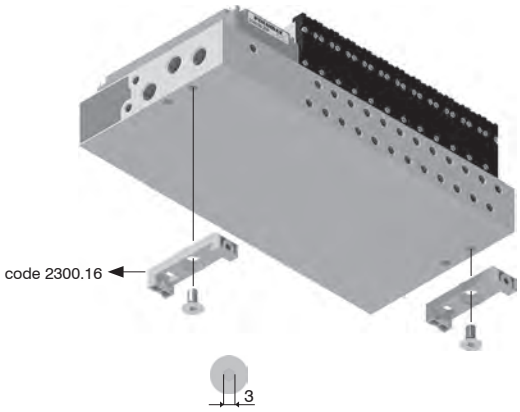

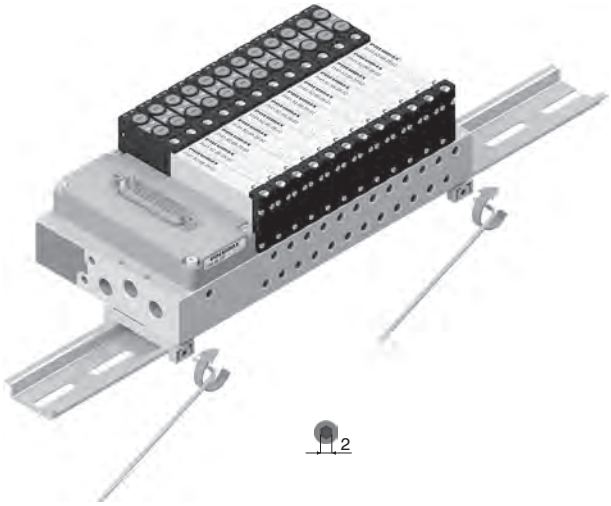

Supply ports and maximum possible size according to valves used

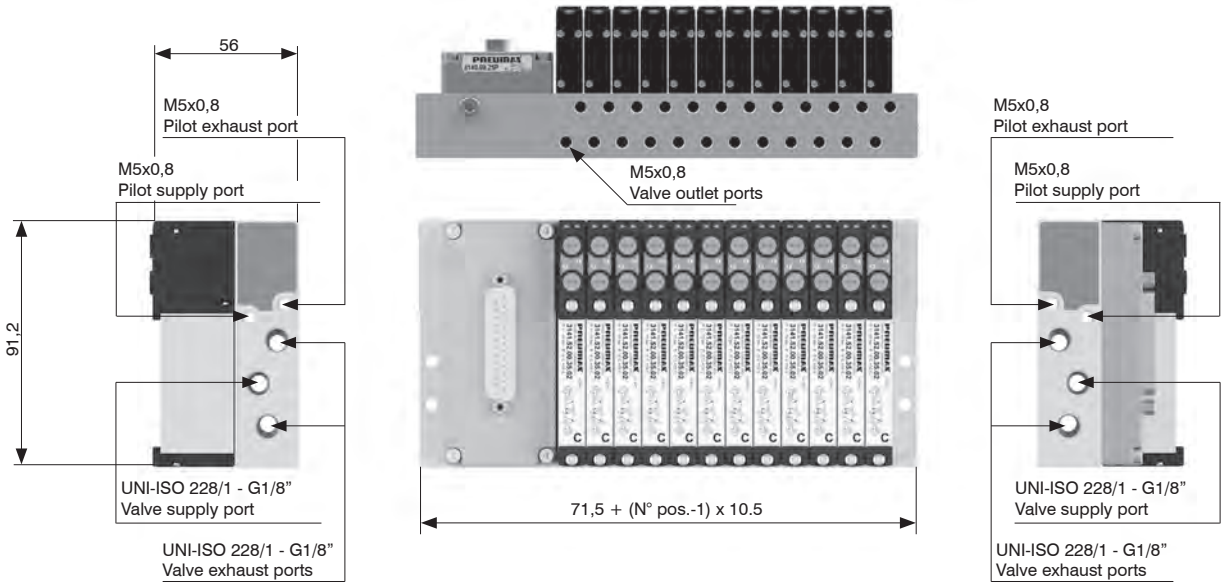

Overall dimensions and technical information are provided solely for informative purposes and may be modified without notice

Manual override actuation

Instable function:
Push to actuate
(when released it moves back
to the original position)

Bistable function:
Push and turn to get the bistable
function

Note: it is strongly suggested to replace the original position after using

Solenoid valves installation

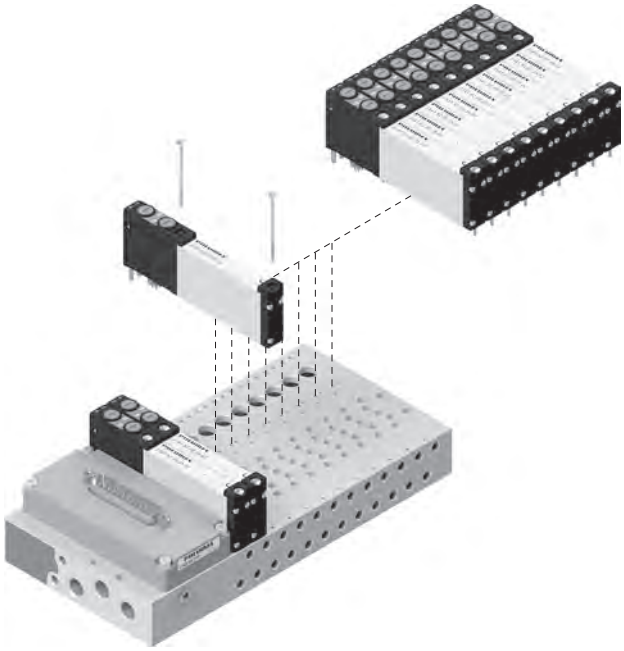

Max. torque moment: 0,2 Nm

Serial systems and multipoint system installation

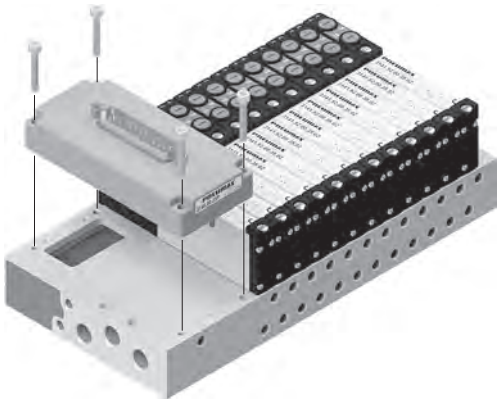

2,5

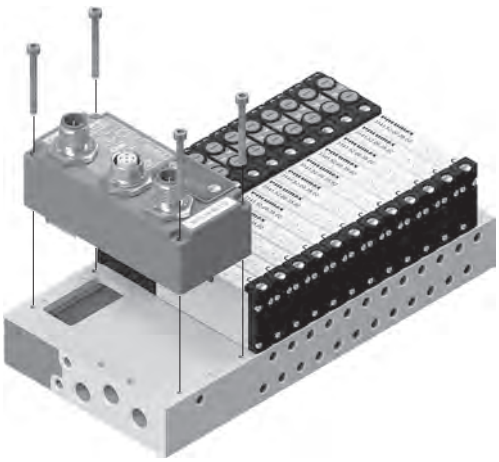

Max. torque moment: 0,5 Nm

General - CANopen® slave modules

CANopen® node handles up to 64 inputs and outputs, both divided into 8 bytes. Output typologies include solenoid valves, digital outputs (e.g. 5130.08.M8) and analog outputs (e.g. 5130.2T.00). Connectable inputs typologies include digital inputs modules (e.g. 5230.08.M8), analog input modules (e.g. 5230.2T.00), and Pt100 inputs modules (e.g. 5230.4P.02). Optional modules can be connected to the manifold in any order and configuration, provided that modules are installed starting from the node and optional position modules left to furthest end.
Electrical power must be supplied via circular M12 4 pins type A male connector. The separation between 24VDC supply of the node and 24VDC of the outputs allows to turn off outputs leaving the node and eventual inputs operational.
CANopen® network connection is achieved via two circular male-female M12 5 pins type A connectors connected in parallel; connectors pinout is compliant to CiA Draft Recommendation 303-1 (V. 1.3 : 30 December 2004).
Transmission speed and address are set via DIP-switch.
Internal termination resistance is on-board and can be enabled via DIP-switch as well.
There are two CANopen® node versions: they differ by number of outputs directly allocated to solenoid valve positions.
5530.64.32CO part number provides the first 32 out of 64 outputs, corresponding to less significant 4 bytes, are permanently allocated to solenoid valve positions, regardless how many they physically are and how many valves are installed. The remaining 32 outputs can be used to handle optional output modules. Bytes allocation to optional modules is done automatically.
5530.64.48CO part number provides the first 48 out of 64 outputs, corresponding to less significant 6 bytes, are permanently allocated to solenoid valve positions, regardless how many they physically are and how many valves are installed. The remaining 16 outputs can be used to handle optional output modules. Bytes allocation to optional modules is done automatically.
Two part-numbers have been provided to tailor configuration on your needs. 5530.64.48CO part number is recommended in case several solenoid valves must be handled, whilst ensuring room for future expansions. 5530.64.32CO part number is recommended in case increased flexibility is needed for digital outputs.
To better understand different possibilities offered during configuration, some examples follow.

Ordering code

5530.64.32CO
5530.64.48CO

Scheme / Overall dimensions and I/O layout

NETWORK connectors

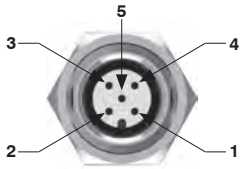

M12A 5P FEMALE

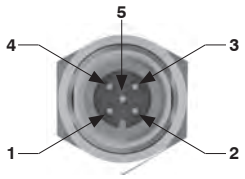

M12A 5P MALE

PIN	SIGNAL	DESCRIPTION
1	CAN_SHLD	Optional CAN Shield
2	CAN_V+	Optional CAN external positive supply (Dedicated for supply of transceiver and Optocouplers, if galvanic isolation of the bus node applies)
3	CAN_GND	Ground / 0V / V-
4	CAN_H	CAN_H bus line (dominant high)
5	CAN_L	CAN_L bus line (dominant low)

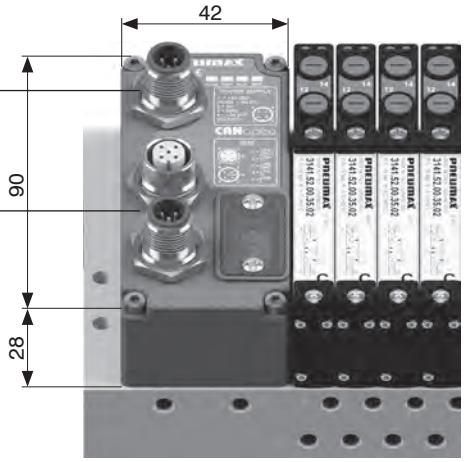

POWER SUPPLY connector

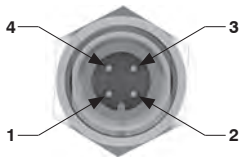

M12A 4P MALE

PIN	DESCRIPTION
1	+ 24 VDC (NODE & INPUTS)
2	NC
3	GND
4	+24 VDC (OUTPUTS)

Technical characteristics

	Specifications	CiA Draft Standard Proposal 301 V 4.10 (15 August 2006)
	Case	Reinforced technopolymer
Power supply	Power supply connection	M12 4 P male connector (IEC 60947-5-2)
	Power supply voltage	+24 VDC +/- 10%
	Node consumption (without inputs)	30 mA
	Power supply diagnosis	Green LED PWR / Green LED OUT
Network	Network connectors	2 M12 5 P connectors male-female type A (IEC 60947-5-2)
	Baud rate	10 - 20 - 50 - 125 - 250 - 500 - 800 - 1000 Kbit/s
	Addresses possible numbers	From 1 to 63
	Max. node in net	64 (slave + master)
	Bus maximum recommended length	100 m at 500 Kbit/s
	Bus diagnosis	Green LED + red LED
	Configuration file	Available from our web site http://www.pneumaxspa.com
	IP Rating	IP65 when assembled
	Temperature range	From 0°C to +50°C

Overall dimensions and technical information are provided solely for informative purposes and may be modified without notice

General - PROFIBUS DP slave modules

PROFIBUS DP node handles up to 64 inputs and outputs, both divided into 8 bytes. Output typologies include solenoid valves, digital outputs (e.g. 5130.08.M8) and analog outputs (e.g. 5130.2T.00). Connectable inputs typologies include digital inputs modules (e.g. 5230.08.M8), analog input modules (e.g. 5230.2T.00), and Pt100 inputs modules (e.g. 5230.4P.02). Optional modules can be connected to the manifold in any order and configuration, provided that modules are installed starting from the node and optional position modules left to furthest end.
Electrical power must be supplied via circular M12 4 pins type A male connector. The separation between 24VDC supply of the node and 24VDC of the outputs allows to turn off outputs leaving the node and eventual inputs operational.
PROFIBUS DP network connection is achieved via two circular male-female M12 5 pins type B connectors, connected in parallel; connector pinout is PROFIBUS Interconnection Technology compliant (Version 1.1 August 2001).
Network node address is set via DIP-switch.
Internal termination resistance is on-board and can be enabled via DIP-switch as well.
There are two PROFIBUS DP node versions: they differ by number of outputs directly allocated to solenoid valve positions.
5330.64.32PB part number provides the first 32 out of 64 outputs, corresponding to less significant 4 bytes, are permanently allocated to solenoid valve positions, regardless how many they physically are and how many valves are installed. The remaining 32 outputs can be used to handle optional output modules. Bytes allocation to optional modules is done automatically.
5330.64.48PB part number provides the first 48 out of 64 outputs, corresponding to less significant 6 bytes, are permanently allocated to solenoid valve positions, regardless how many they physically are and how many valves are installed. The remaining 16 outputs can be used to handle optional output modules. Bytes allocation to optional modules is done automatically.
Two part-numbers have been provided to tailor configuration on your needs. 5330.64.48PB part number is recommended in case several solenoid valves must be handled, whilst ensuring room for future expansions. 5330.64.32PB part number is recommended in case increased flexibility is needed for digital outputs.
To better understand different possibilities offered, some configuration examples are made in the following pages.

Ordering code

5330.64.32PB
5330.64.48PB

Scheme / Overall dimensions and I/O layout

NETWORK connectors

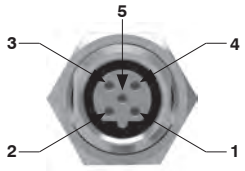

M12B 5P FEMALE

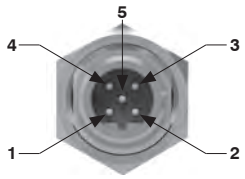

M12B 5P MALE

PIN	SIGNAL	DESCRIPTION
1	VP	Optional Power supply plus, (P5V)
2	A-line	Receive / Transmit data -N, A-line
3	DGND	Data Ground (reference potential to VP)
4	B-line	Receive / Transmit data -P, B-line
5	SHIELD	Shield or PE

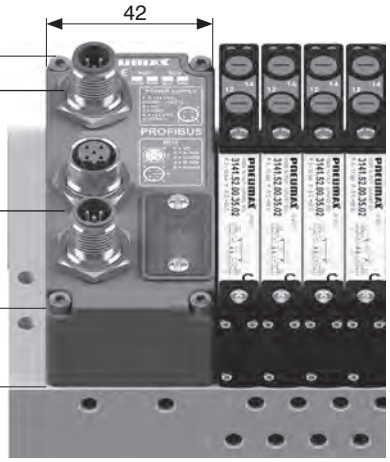

POWER SUPPLY connector

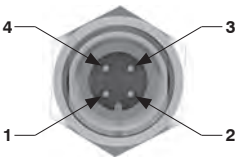

M12A 4P MALE

PIN	DESCRIPTION
1	+ 24 VDC (NODE & INPUTS)
2	NC
3	GND
4	+24 VDC (OUTPUTS)

Technical characteristics

	Specifications	PROFIBUS DP
	Case	Reinforced technopolymer
Power supply	Power supply connection	M12 4 P male connector (IEC 60947-5-2)
	Power supply voltage	+24 VDC +/- 10%
	Node consumption (without inputs)	50 mA
	Power supply diagnosis	Green LED PWR / Green LED OUT
Network	Network connectors	2 M12 5 P connectors male-female type B
	Baud rate	9,6 - 19,2 - 93,75 - 187,5 - 500 - 1500 - 3000 - 6000 - 12000 Kbit/s
	Addresses possible numbers	From 1 to 99
	Max. node in net	100 (slave + master)
	Bus maximum recommended length	100 m at 12 Mbit/s - 1200 m at 9,6 Kbit/s
	Bus diagnosis	Green LED + red LED
	Configuration file	Available from our web site http://www.pneumaxspa.com
	IP Rating	IP65 when assembled
	Temperature range	From 0°C to +50°C

Overall dimensions and technical information are provided solely for informative purposes and may be modified without notice

General - EtherNet/IP - EtherCAT® - PROFINET IO RT slave modules

5730.128.48PN, 5730.128.48EC e 5730.128.48EI nodes handle up to 128 inputs and outputs, both divided into 16 bytes. Output typologies include solenoid valves, digital outputs (e.g. 5130.08.M8) and analog outputs (e.g. 5130.2T.00). Connectable input types include digital inputs modules (e.g. 5230.08.M8), analog inputs modules (e.g. 5230.2T.00) and Pt100 inputs modules (e.g. 5230.4P.02). Optional modules can be connected to the manifold in any order and configuration, provided that modules are installed starting from the node and optional position modules left to furthest end.

Electric power must be supplied via circular M12 4 pins male type A connector. The separation between 24VDC supply of the node and 24VDC of the outputs allows to turn off outputs leaving the node and eventual inputs operational.

The network connection is achieved via two circular female connectors (M12 4 pins, type D); these two circular connectors belong to two separate communication ports; hence they are not connected in parallel.

In 5730.128.48PN, 5730.128.48EC and 5730.128.48EI part numbers the first 48 out of 128 outputs, corresponding to less significant 6 bytes, are permanently allocated to the solenoid valve positions, regardless how many they are and how many valves are installed. The remaining 80 outputs can be used to handle optional output modules. Bytes allocation to optional modules is done automatically.

When more than 64 inputs are needed and current coming from 24VDC rail is higher than 2.5A, the use of additional power supply module (part number 5030.M12) is mandatory. 5030.M12 additional power supply module must be plugged-in upstream to the modules exceeding the above stated current limit, therefore close to the network node. On the other hand, whenever 64 outputs are used and further optional outputs modules are required, if total computed simultaneous current is higher than 2A, the 5030.M12 module is mandatory. 5030.M12 module is plugged-in upstream to additional modules; it will supply electrical power to downstream modules. If 5030.M12 module has been already integrated to supply inputs modules, it is not necessary to install a second one, since it already supplies outputs modules.

Ordering code

5730.128.48EI
5730.128.48EC
5730.128.48PN

Scheme / Overall dimensions and I/O layout

NETWORK connectors

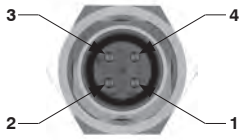

M12D 4P FEMALE

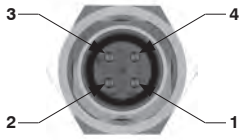

M12D 4P FEMALE

PIN	SIGNAL	DESCRIPTION
1	TX +	Ethernet Transmit High
2	RX +	Ethernet Receive High
3	TX -	Ethernet Transmit Low
4	RX -	Ethernet Receive Low

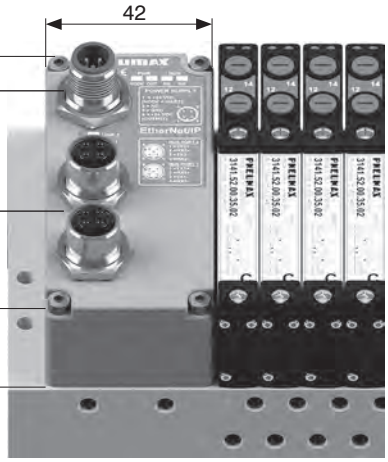

POWER SUPPLY connector

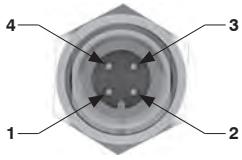

M12A 4P MALE

PIN	DESCRIPTION
1	+ 24 VDC (NODE & INPUTS)
2	NC
3	GND
4	+24 VDC (OUTPUTS)

Technical characteristics

	Case	Reinforced technopolymer
Power supply	Power supply connection	M12 4 P male connector (IEC 60947-5-2)
	Power supply voltage	+24 VDC +/- 10%
	Node consumption (without inputs)	100 mA
	Power supply diagnosis	Green LED PWR / Green LED OUT
Network	Network connectors	2 M12 4 P female connectors type D (IEC 61076-2-101)
	Baud rate	100 Mbit/s
	Addresses possible numbers	As an IP address
	Maximum distance between 2 nodes	100 m
	Bus diagnosis	2 bicolor red / green LEDs + 4 LEDs for link & activity
	Configuration file	Available from our web site http://www.pneumaxspa.com
	IP Rating	IP65 when assembled
	Temperature range	From 0°C to +50°C

Overall dimensions and technical information are provided solely for informative purposes and may be modified without notice

General - IO-Link slave modules

IO-Link node handles up to 64 inputs and outputs, both divided into 8 bytes. Output typologies include solenoid valves, digital outputs (e.g. 5130.08.M8) and analog outputs (e.g. 5130.2T.00). Connectable inputs typologies include digital inputs modules (e.g. 5230.08.M8), analog input modules (e.g. 5230.2T.00), and Pt100 inputs modules (e.g. 5230.4P.02). Optional modules can be connected to the manifold in any order and configuration, provided that modules are installed starting from the node and optional position modules left to furthest end.
Electrical power and connection to IO-Link Master come through male circular connector M12, 5 poles, type A, "CLASS B" according to IO-Link specifications. L+/L- electrical power allows to supply the node while P24/N24 electrical power allows to supply inputs and outputs modules, including solenoid valves, connected to the manifold. L+/L- and P24/N24 power supplies are galvanically isolated into the IO-Link node.
IO-Link node exists in two versions: they differ by number of outputs directly allocated to solenoid valve positions.
5830.64.32IK part number provides the first 32 out of 64 outputs, corresponding to less significant 4 bytes, are permanently allocated to solenoid valve positions, regardless how many they physically are and how many valves are installed. The remaining 32 outputs can be used to handle optional output modules. Bytes allocation to optional modules is done automatically.
5830.64.48IK part number provides the first 48 out of 64 outputs, corresponding to less significant 6 bytes, are permanently allocated to solenoid valve positions, regardless how many they physically are and how many valves are installed. The remaining 16 outputs can be used to handle optional output modules. Bytes allocation to optional modules is done automatically.
Two part-numbers have been provided to tailor configuration on your needs. 5830.64.48IK part number is recommended in case several solenoid valves must be handled, whilst ensuring room for future expansions. 5830.64.32IK part number is recommended in case increased flexibility is needed for digital outputs.

Ordering code

5830.64.32IK
5830.64.48IK

Scheme / Overall dimensions and I/O layout

CLASS B connector

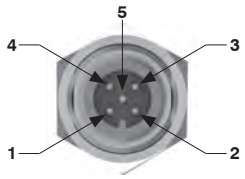

M12A 5P MALE

PIN	SIGNAL
1	L+
2	P24 (+24 VDC)
3	L-
4	C/Q
5	N24 (GND)

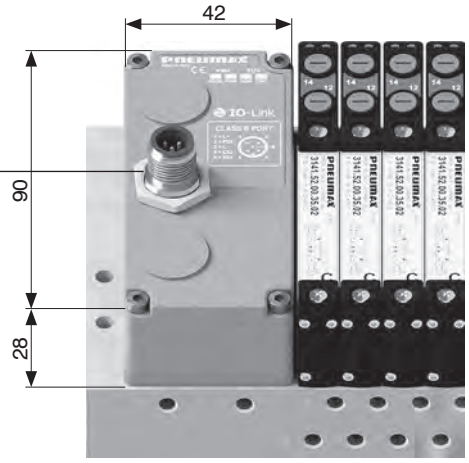

Technical characteristics

	Specifications	IO-Link Specification v1.1
	Case	Reinforced technopolymer
Outputs	PNP equivalent outputs	+24 VDC +/- 10%
	Maximum output number	64
	Maximum output simultaneously actuated	64
Network	Network connectors	Class B port
	Communication speed	COM2
	Maximum distance from Master	20 m
	Bus diagnosis	1 green and 1 red LED di stato for status
	Vendor ID / Device ID	1257 (hex 0x04E9) / 3000 (hex 0x0BB8)
	Configurations file IODD	Available from our web site http://www.pneumaxspa.com
	IP Rating	IP65 when assembled
	Temperature range	From 0°C to +50°C

General - 8 M8 digital inputs module

M8 digital inputs module provides 8 M8, 3 pins, female connectors.
Inputs have PNP logic, 24VDC ± 10%.
It is possible to connect 2 wires devices (e.g. switches, magnetic limit switches, pressure switches, etc...) as well as 3 wires devices (e.g. proximity sensors, photocells, electronic magnetic limit switches, etc.).
Inputs module power supply is provided by 24VDC power input on the serial system (type A, 4 pin M12 power connector, pin 1) or by module 5030.M12, in case it were installed upstream of the inputs module.
Maximum overall available current for all 8 inputs on 24VDC rail is 300mA, since every module is equipped with an auto-resettable fuse with 300mA threshold, thus, in case of overload or short circuit, 24VDC rail is interrupted and, as a consequence, all 8 inputs 24VDC is turned off along with green PWR LED. Other eventually connected inputs modules stays operational. Removing fault cause, green PWR LED gets back in on status and module becomes operational again.
The M8 digital inputs module takes up 8 input bits of the serial node installed on the manifold.

Ordering code

5230.08.M8

Scheme / Overall dimensions and I/O layout

M8 3P female connector

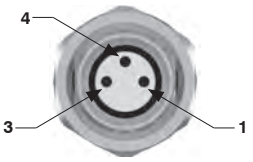

PIN	DESCRIPTION
1	+ 24 VDC (INPUTS)
3	GND
4	INPUT

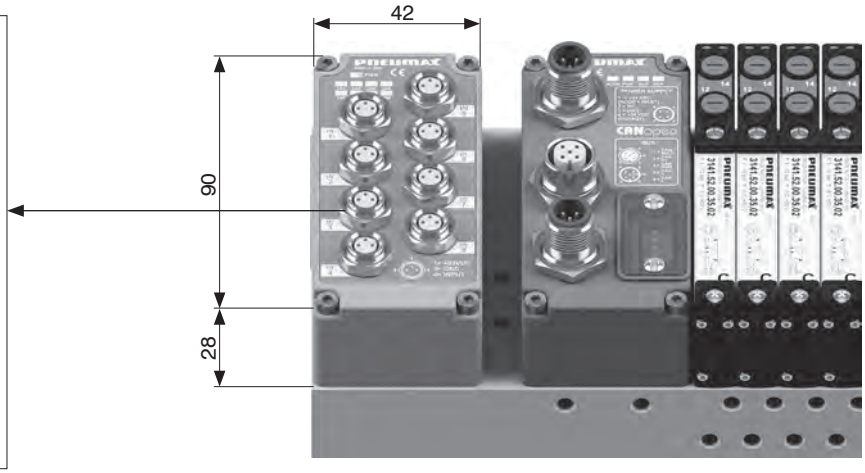

General - 8 M12 digital inputs module

M12 digital inputs module provides 4 M12, 5 pins, female connectors.
Inputs have PNP logic, 24VDC ± 10%.
Every connector takes two independent input channels.
It is possible to connect 2 wires devices (e.g. switches, magnetic limit switches, pressure switches, etc...) as well as 3 wires devices (e.g. proximity sensors, photocells, electronic magnetic limit switches, etc.).
Inputs module power supply is provided by 24VDC power input on the serial system (type A, 4 pin M12 power connector, pin 1) or by module 5030.M12, in case it were installed upstream of the inputs module.
Maximum overall available current for all 4 connectors on 24VDC rail is 300mA, since every module is equipped with an auto-resettable fuse with 300mA threshold, thus, in case of overload or short circuit, 24VDC rail is interrupted and as a consequence all inputs 24VDC is turned off along with green PWR LED. Other eventually connected inputs modules remains operational. Removing fault cause, green PWR LED gets back in on status and module becomes operational again.
The M12 digital inputs module takes up 8 input bits of the serial node installed on the manifold.

Ordering code

5230.08.M12

Scheme / Overall dimensions and I/O layout

M12 5P female connector

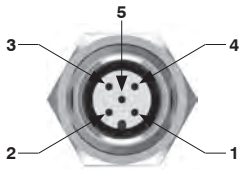

M12A 5P FEMALE

PIN	DESCRIPTION
1	+ 24 VDC (INPUTS)
2	INPUT B
3	GND
4	INPUT A
5	NC

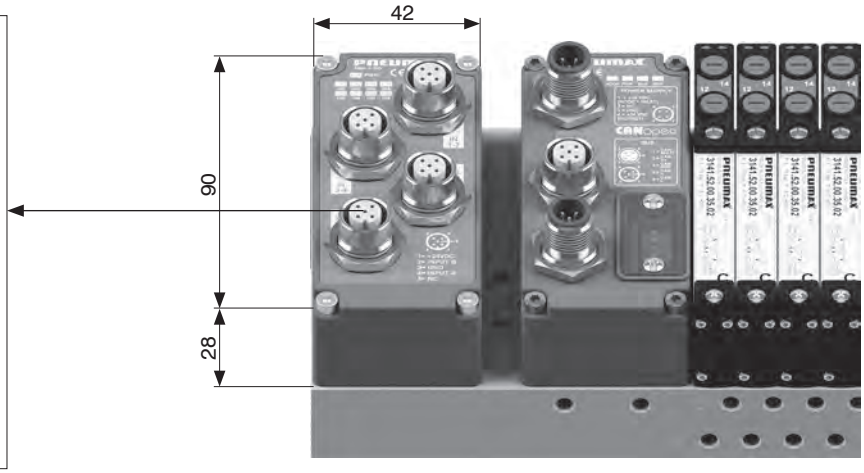

Overall dimensions and technical information are provided solely for informative purposes and may be modified without notice

General - 8 M8 digital outputs module
Module has 8 M8 female connectors.
Outputs have PNP logic, 24VDC ± 10%.
Maximum available current per output is 100mA.
Electric power on outputs module is supplied by pin 4 of the M12 power connector on the network node or by the expansion module (5030.M12 part number). Power supply presence is displayed by “PWR OUT” green LED light-on.
The module takes up 8 outputs (8 bits of the output bytes) of the serial node.

Ordering code

5130.08.M8

Scheme / Overall dimensions and I/O layout

M8 3P female connector

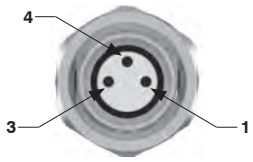

PIN	DESCRIPTION
1	NC
3	GND
4	OUTPUT

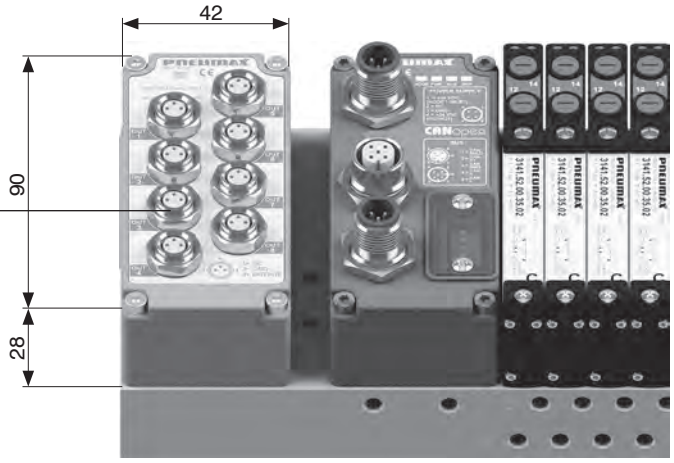

General - 8 M12 digital outputs module
Module has 4 M12 female connectors.
Outputs have PNP logic, 24VDC ± 10%.
Maximum available current per output is 100mA.
Electric power on outputs module is supplied by pin 4 of the M12 power connector on the network node or by the expansion module (5030.M12 part number). Power supply presence is displayed by “PWR OUT” green LED light-on.
The module takes up 8 outputs (8 bits of the output bytes) of the serial node.

Ordering code

5130.08.M12

Scheme / Overall dimensions and I/O layout

M12 5P female connector

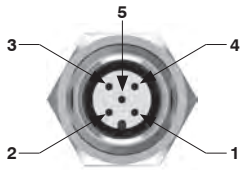

M12A 5P FEMALE

PIN	DESCRIPTION
1	NC
2	OUTPUT B
3	GND
4	OUTPUT A
5	NC

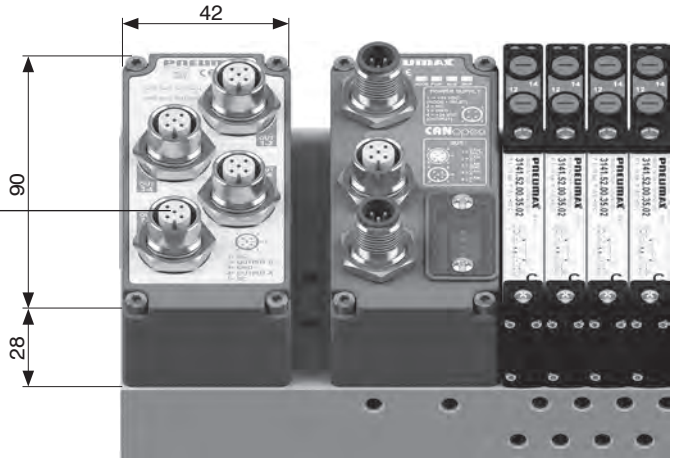

General - 32 digital inputs SUB-D 37 pins module

The module provides a SUB-D 37 pins female connector.
Inputs have PNP logic, 24VDC ± 10%.
It is possible to connect 2 wires devices (e.g. switches, magnetic limit switches, pressure switches, etc...) as well as 3 wires devices (e.g. proximity sensors, photocells, electronic magnetic limit switches, etc.).
Inputs module power supply is provided by 24VDC power input on the serial system (type A, 4 pin M12 power connector, pin 1) or by module 5030.M12, in case it were installed upstream of the inputs module.
Maximum overall available current for all 32 inputs on 24VDC rail is 1A, since every module is equipped with an auto-resettable fuse with 1A threshold, thus, in case of overload or short circuit, 24VDC rail is interrupted and as a consequence all 32 inputs 24VDC is turned off along with green PWR LED. Other eventually connected inputs modules stays operational. Removing fault cause, green PWR LED gets back in on status and module becomes operational again.
The module takes up 32 bits on the input data of the serial node installed.

Ordering code

5230.32.37P

Scheme / Overall dimensions and I/O layout

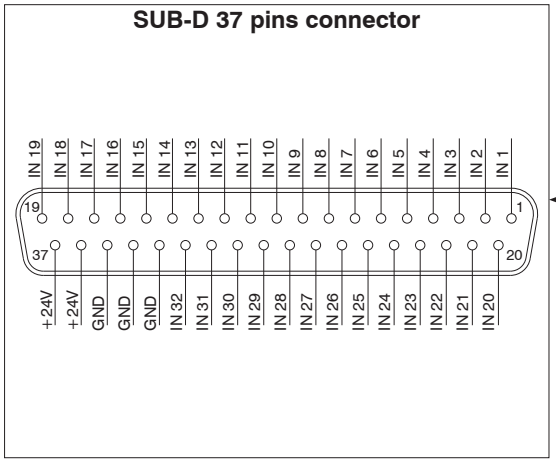

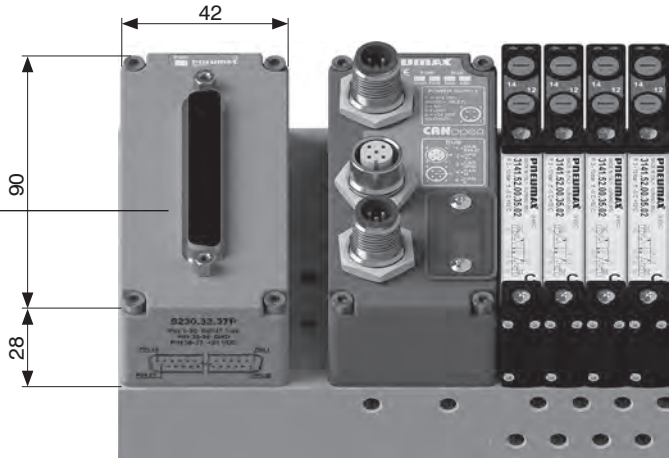

General - 32 digital outputs SUB-D 37 pins module

Module has a SUB-D 37 pins female connector.
Outputs have PNP logic, 24VDC ± 10%.
Maximum available current per output is 100mA.
Electric power on outputs module is supplied by pin 4 of the M12 power connector on the network node or by the expansion module (5030.M12 part number). Power supply presence is displayed by “PWR OUT” green LED light-on.
The module takes up 32 outputs (32 bits of the output bytes) of the serial node.

Ordering code

5130.32.37P

Scheme / Overall dimensions and I/O layout

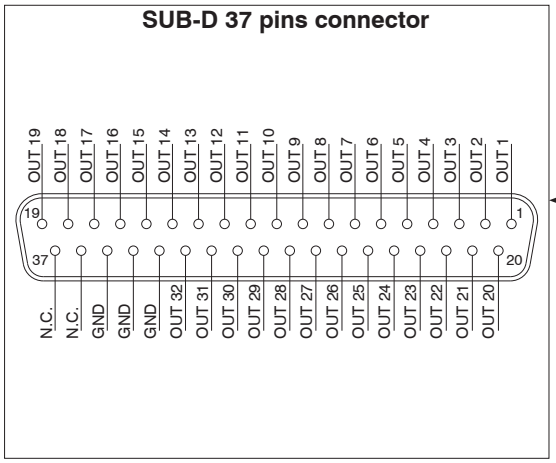

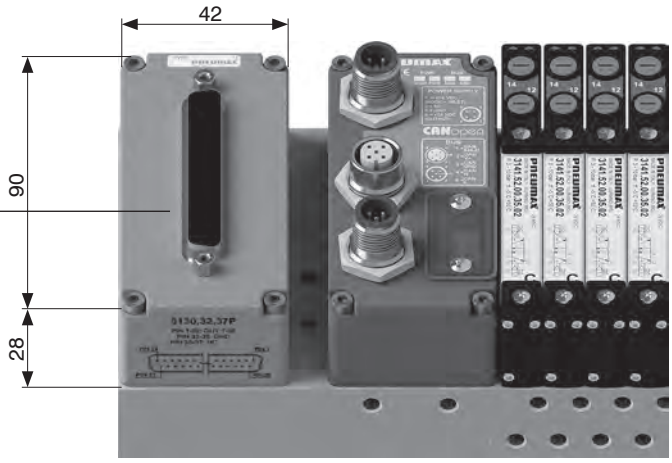

Overall dimensions and technical information are provided solely for informative purposes and may be modified without notice

General - M8 analogue inputs modules

M8 analog inputs module digitizes analog signals and transfer acquired data to field bus, via network node.
Each input is sampled at 12 bits and transmitted, for convenience, at 16 bit, whose less significant bits padded to 0. Therefore, each digitized signal takes 16 inputs (2 bytes) of the serial node. During the ordering process, it is necessary to verify that the serial node has enough free inputs.
Following table reports available models:

Ordering code

5230._ _.0_

CODE	SIGNAL	ANALOGUE INPUTS	MAXIMUM CURRENT ON +24 VDC RAIL	OCCUPIED INPUTS
5230.2T.00	VOLTAGE 0-10V	2	300 mA	32 (4 Byte)
5230.2T.01	VOLTAGE 0-5V	2	300 mA	32 (4 Byte)
5230.4T.00	VOLTAGE 0-10V	4	750 mA	64 (8 Byte)
5230.4T.01	VOLTAGE 0-5V	4	750 mA	64 (8 Byte)
5230.2C.00	CURRENT 4-20mA	2	300 mA	32 (4 Byte)
5230.2C.01	CURRENT 0-20mA	2	300 mA	32 (4 Byte)
5230.4C.00	CURRENT 4-20mA	4	750 mA	64 (8 Byte)
5230.4C.01	CURRENT 0-20mA	4	750 mA	64 (8 Byte)

Power supply of the M8 analog inputs module is provided by 24VDC power input on the serial system (type A, 4 pin M12 power connector, pin 1) or by module 5030.M12, in case it were installed upstream of the inputs module.
Modules provide M8 3 pins female connectors and a diagnostic LED for every analog input. The LED indicates signal presence (green) or signal out of range (red).
Maximum available current for each channel on 24VDC rail (pin 1) is reported in the table. Each module provides an internal resettable fuse, which cuts 24VDC power supply to every M8 connector and turning off green PWR LED when thresholds are exceeded. Inputs of other eventual modules connected to the node continue to operate uninterrupted. By removing the cause of the threshold overrun, green PWR LED gets back in ON status and the module becomes operational again.

Scheme / Overall dimensions and I/O layout

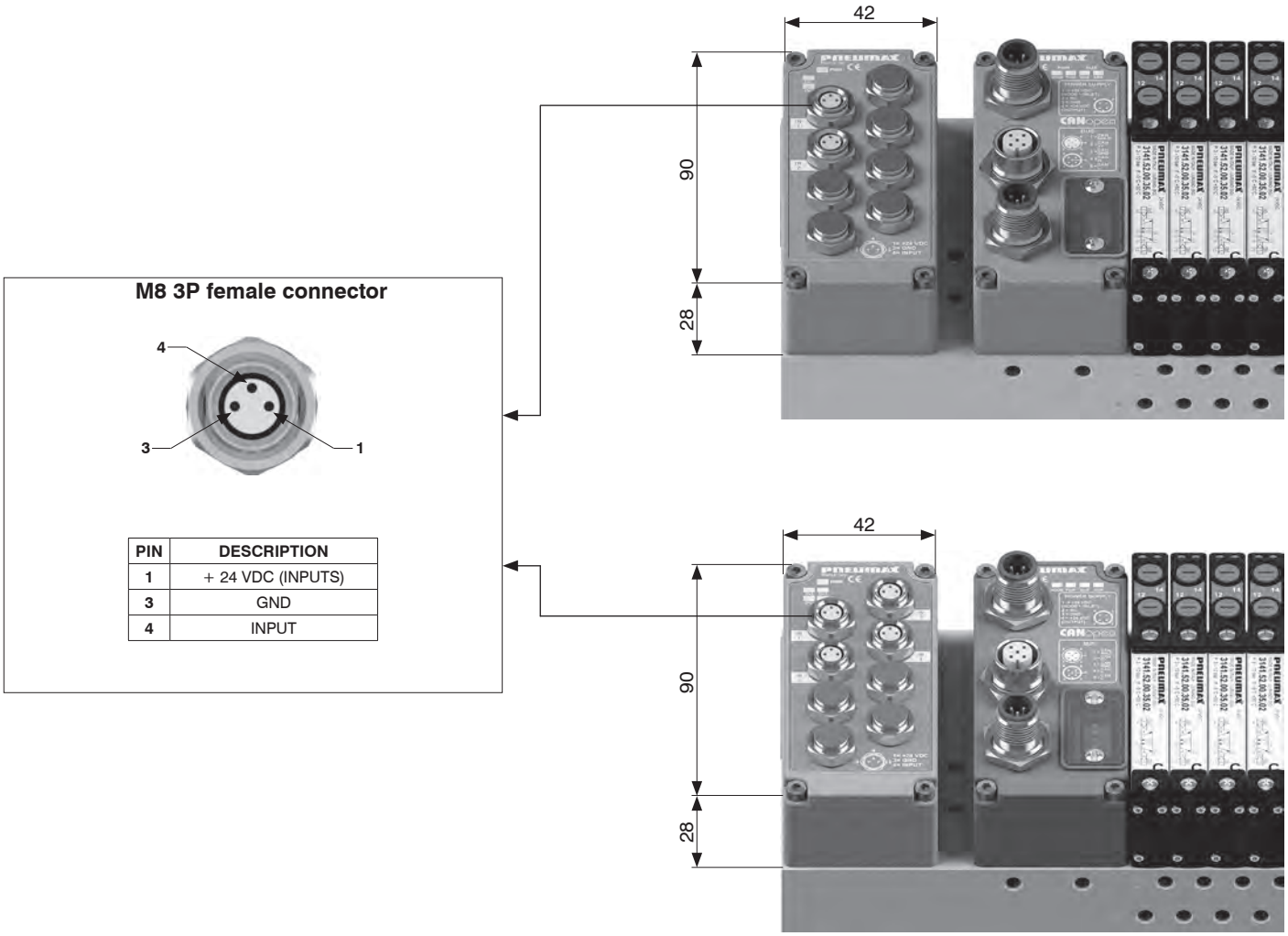

General - M8 analogue outputs modules

M8 analog outputs module converts output data, received from field bus via network node, into analog signal.
Each analog output has a resolution of 12 bits, processed from 16 outputs (2 bytes), ignoring 4 less significant bits.
During the ordering process, it is necessary to verify that the serial node has enough free outputs.
Different models are available:

Ordering code

5130._ _.0_

CODE	SIGNAL	ANALOGUE OUTPUTS	MAXIMUM CURRENT ON + 24 VDC RAIL	OCCUPIED OUTPUTS
5130.2T.00	VOLTAGE 0-10V	2	1 A	32 (4 Byte)
5130.2T.01	VOLTAGE 0-5V	2	1 A	32 (4 Byte)
5130.4T.00	VOLTAGE 0-10V	4	2 A (1A for each pair of channel)	64 (8 Byte)
5130.4T.01	VOLTAGE 0-5V	4	2 A (1A for each pair of channel)	64 (8 Byte)
5130.2C.00	CURRENT 4-20mA	2	1 A	32 (4 Byte)
5130.2C.01	CURRENT 0-20mA	2	1 A	32 (4 Byte)
5130.4C.00	CURRENT 4-20mA	4	2 A (1A for each pair of channel)	64 (8 Byte)
5130.4C.01	CURRENT 0-20mA	4	2 A (1A for each pair of channel)	64 (8 Byte)

Power supply of the M8 analog outputs module is provided by 24VDC power input on the serial system (type A, 4 pin M12 power connector, pin 4) or by module 5030.M12, in case it were installed upstream of the outputs module. Modules provide M8 3 pins female connectors and a diagnostic LED for every analog input. The LED indicates signal presence (green) or overload fault (red).
Maximum available current for each channel on 24VDC rail (pin 1) is reported in the table. Each module provides an internal resettable fuse, which cuts 24VDC power supply to every M8 connector and turning off green PWR LED when thresholds are exceeded. Outputs of other eventual modules connected to the node continue to operate uninterrupted. By removing the cause of the threshold overrun, green PWR LED gets back in ON status and the module becomes operational again.

Scheme / Overall dimensions and I/O layout

M8 3P female connector

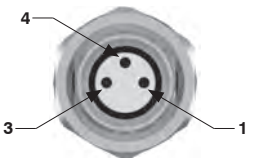

PIN	DESCRIPTION
1	+24 VDC (OUTPUTS)
3	GND
4	OUTPUT

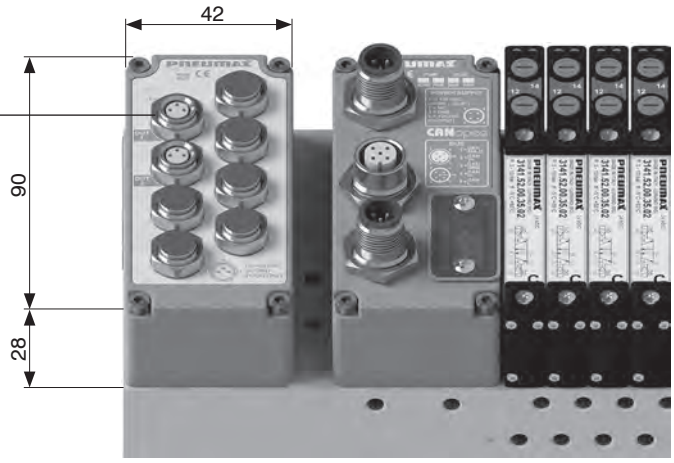

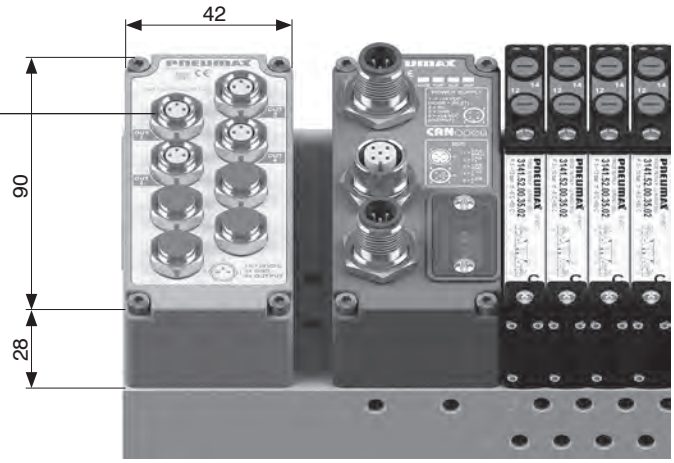

Overall dimensions and technical information are provided solely for informative purposes and may be modified without notice

General - Pt100 inputs modules

Pt100 inputs module digitizes signals from Pt100 sensors and transfers acquired data to field bus, via network node. Each input is sampled at 12 bits and transmitted, for convenience, at 16 bits, whose less significant bits padded to 0. Therefore, each digitized signal takes 16 inputs (2 bytes) of the serial node. During the ordering process, it is necessary to verify that the serial node has enough free inputs.

It is possible to connect two, three or four wire sensors.
Temperature range is from -100°C to 300°C.
When sensor is not connected, it is returned a value corresponding to -100°C.

Temperature can be obtained from node read value (in points) using this formula:

$$\text{Temperature (°C)} = \left(\frac{\text{Points}}{4095} \times 400\right) - 100$$

Following table reports available models:

CODE	MODEL	INPUTS NUMBER	OCCUPIED INPUTS
5230.2P.00	Pt100 2 wires	2	32 (4 Byte)
5230.2P.01	Pt100 3 wires	2	32 (4 Byte)
5230.2P.02	Pt100 4 wires	2	32 (4 Byte)
5230.4P.00	Pt100 2 wires	4	64 (8 Byte)
5230.4P.01	Pt100 3 wires	4	64 (8 Byte)
5230.4P.02	Pt100 4 wires	4	64 (8 Byte)

Module provides M8 4 pins female connectors and a diagnostic LED for every input.
The LED indicates the presence of the PT100 sensor or the overcoming of set temperature threshold.

Inputs module power supply is provided by 24VDC power input on the serial system (type A, 4 pin M12 power connector, pin 1) or by module 5030.M12, in case it were installed upstream of the inputs module.
Presence of power supply +24VDC is indicated by a PWR green LED.

Ordering code

5230._ _.0_

Scheme / Overall dimensions and I/O layout

M8 4P female connector

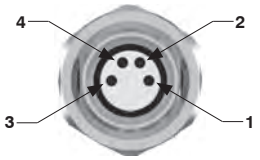

Connection scheme 2 wires probe

PIN	DESCRIPTION
1	NC
2	SENSOR +
3	POWER SUPPLY -
4	NC

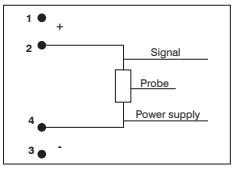

Connection scheme 3 wires probe

PIN	DESCRIPTION
1	POWER SUPPLY -
2	SENSOR +
3	POWER SUPPLY -
4	NC

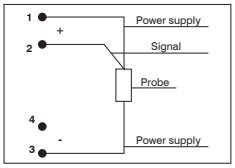

Connection scheme 4 wires probe

PIN	DESCRIPTION
1	POWER SUPPLY +
2	SENSOR +
3	POWER SUPPLY -
4	SENSORE -

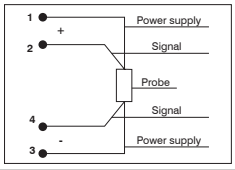

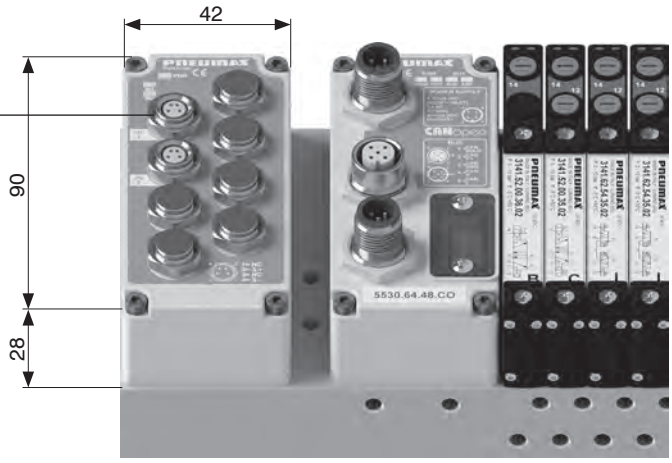

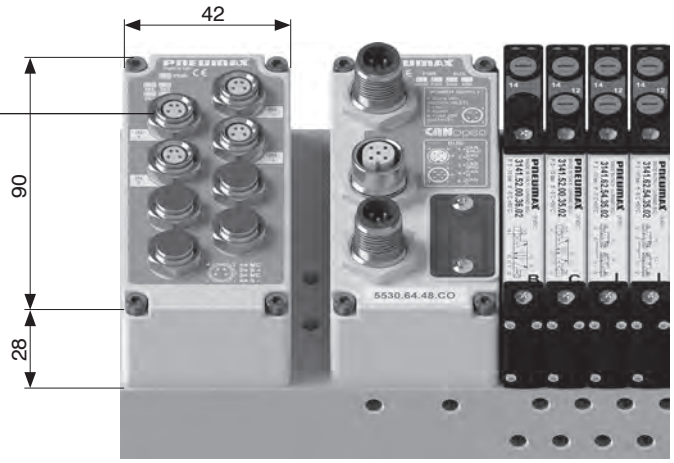

General - Additional power supply module

Additional power supply module 5030.M12 supplies additional electric power for downstream optional modules, where “downstream” means farther from serial node.
Electric connection of the module to external power supply unit occurs via an M12 4 pins type A male connector.
M12 connector has two different pins to power up inputs (pin 1) and outputs (pin 4). Presence of each power supply rail is indicated by corresponding green LED.

Ordering code

5030.M12

Scheme / Overall dimensions and I/O layout

M12 4P male connector

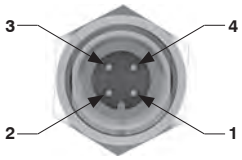

M12A 4P MALE

PIN	DESCRIPTION
1	+ 24 VDC
2	NC
3	GND
4	PWR OUT

Electric power supply provided by additional power supply module

Electric power supply provided by serial system

General - Optional position module

Optional position module is employed to protect manifold connections where no module has yet been installed.
Optional position modules must be installed at the left end of the system, that is downstream the other modules.

Ordering code

5030.T00

Configuration example

The code 5030.T00 can be replaced by any of the modules presented in the previous pages, as long as the availability of the necessary inputs or outputs is checked on the node.

Overall dimensions and technical information are provided solely for informative purposes and may be modified without notice

Signal management

64 INPUT + 64 OUTPUT serial systems - 32 fixed OUTPUT (Ex. PROFIBUS DP and CANopen®)

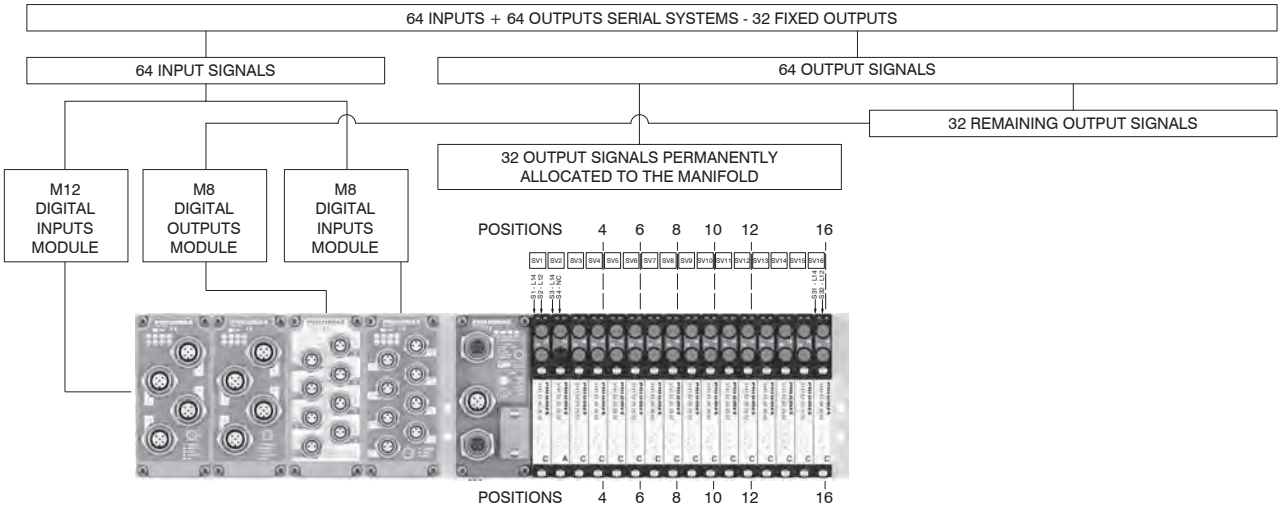

64 INPUT + 64 OUTPUT serial systems - 48 fixed OUTPUT (Ex. PROFIBUS DP and CANopen®)

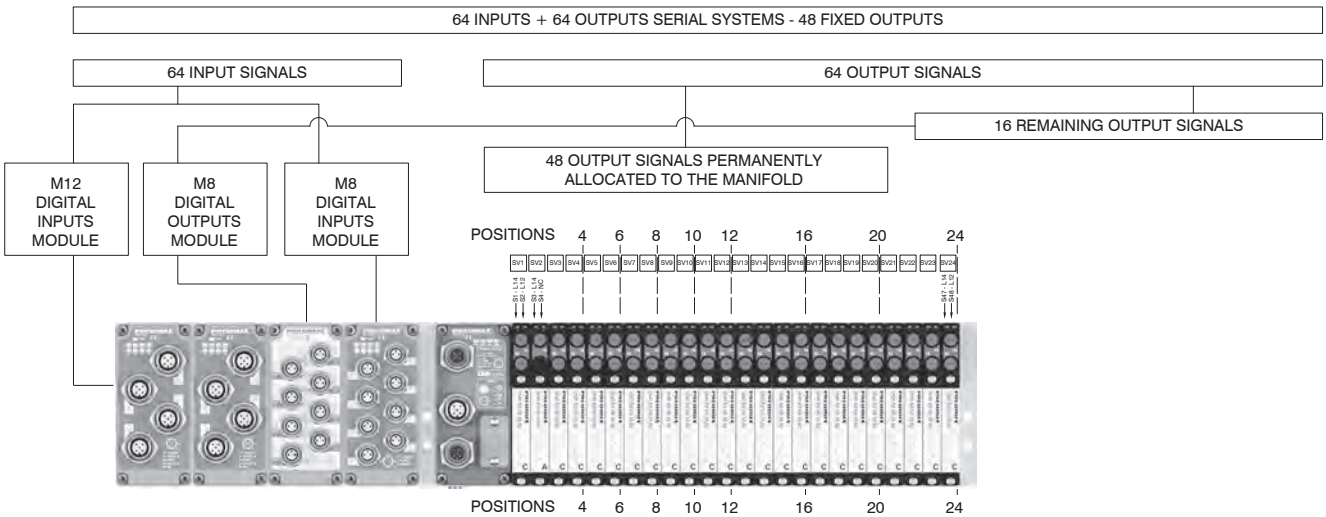

128 INPUT + 128 OUTPUT serial systems - 48 fixed OUTPUT (Ex. EtherNet/IP - EtherCAT® - PROFINET IO RT/IRT)

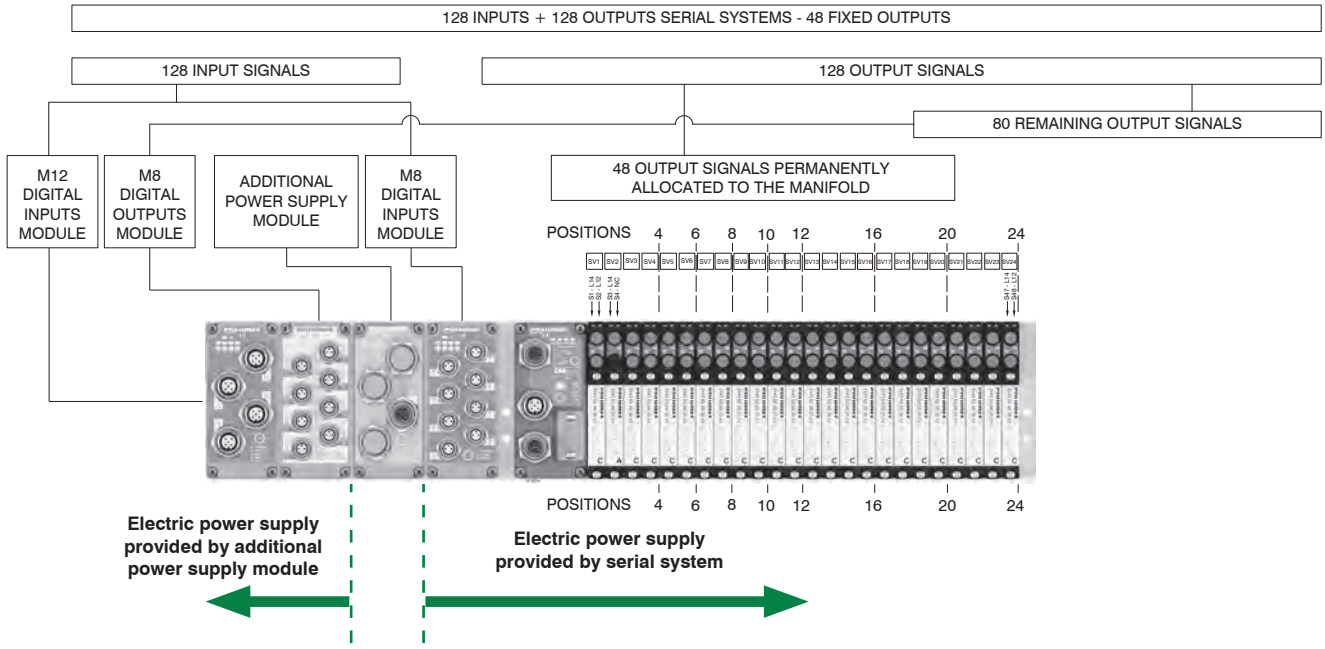

Section 02

Air treatment

Components for compressed air treatment

Air service units

Wide range of components for compressed air treatment, are available in aluminium, technopolymer and steel, in several sizes with connections from 1/8" to 1" and flow rates up to 8000 Nl/m.

Series AIRPLUS 2.1

Product overview	2.3	**Regulators**	2.33	**Air intake**	2.65
Filter	2.5	**Piloted pressure regulators**	2.39	**Pressure switch**	2.67
Coalescing filter	2.10	**Pressure regulators for manifold**	2.44	**Air intake with pressure gauge or digital pressure switch integrated**	2.69
Oil removal filters	2.15	**Manifold pressure regulators**	2.48	**Safeline valves**	2.75
Carbon filters	2.20	**Lubricators**	2.53	**Manifold unit**	2.82
Filter regulators	2.25	**Shut off valves**	2.58		
Accessories	2.32	**Progressive start-up valve**	2.62		

Series 1700 2.88

Product overview	2.88	**Piloted pressure regulators**	2.115	**Electric shut-off valve**	2.136
Filter	2.90	**High sensitive pressure regulator with pneumatic pilot**	2.119	**Pneumatic shut-off valve**	2.138
Coalescing filter	2.94	**Panel mounting pressure regulator**	2.121	**Progressive start-up valve**	1.140
Dynamic drier	2.98	**Panel mounting pressure regulator including pressure gauge**	2.123	**Presa d'aria**	2.142
Filter regulators	2.100	**Pressure regulators for manifold**	2.125	**Air Intake - "H" profile**	2.144
Regulators	2.104	**Manifold pressure regulators**	2.127	**Pressure Switch complete with adapter**	2.146
Regulators with integrated pressure gauge	2.109	**Lubricators**	2.130	**Manifold unit**	2.148
High sensitive air pressure regulators with high flow rate relieving	2.112	**Shut-off valve**	2.134	**Accessories**	2.156

Series 1700 Steel line 2.159

Sizes 2	2.160	**Sizes 3**	2.165	**Sizes 4**	2.168

Proportional technology

The proportional pressure regulators are available in 3 sizes, standard, CANopen® and IO-Link, or miniaturized versions

Series 1700 standard 2.172

Series 1700 Miniaturized 2.188

Measuring devices

Digital pressure switches and pressure gauges, panel mounting or manifold versions

Pressure switches Series DS 2.204

Pressure gauges Series DS 2.206

Pressure booster

3 sizes aluminium Pressure boosters available or technopolymer with 2:1 compression ratio

Series 1700 2.208

Series P+ 2.213

Le informazioni tecniche sono fornite solo a scopo informativo e possono essere soggette a modifiche senza preavviso

Product overview

PRODUCT	VERSION	SIZE				MAX. PRESSURE		MIN - MAX AMBIENT TEMPERATURE		ATEX
		Size 1	Size 2	Size 3	Size 4	Technopolymer body or bowl	Metal body and bowl	Technopolymer body or bowl	Metal body and bowl	
FILTER (F)	**T** : Technopolymer body and thread	●	●	●		13 bar - 10 bar (automatic drain)	/	-5°C +50°C	/	●
	N : Technopolymer body and metal inserts	●	●	●						
	P : Aluminum body		●	●	●		20 bar - 16 bar (automatic drain)		-30°C +80°C	
	L : Aluminum body, low temperature		●	●	●				-40°C +80°C	
COALESCING FILTER (D)	**T** : Technopolymer body and thread	●	●	●		13 bar - 10 bar (automatic drain)	/	-5°C +50°C	/	●
	N : Technopolymer body and metal inserts	●	●	●						
	P : Aluminum body		●	●	●		20 bar - 16 bar (automatic drain)		-30°C +80°C	
	L : Aluminum body, low temperature		●	●	●				-40°C +80°C	
OIL REMOVAL FILTER (DBV) (DCV) (DAV)	**T** : Technopolymer body and thread			●		10 bar		-5°C +50°C		●
	N : Technopolymer body and metal inserts			●						
	P : Aluminum body			●	●					
	L : Aluminum body, low temperature					/		/		
CARBON FILTER (DD)	**T** : Technopolymer body and thread			●		13 bar	/	-5°C +50°C	/	●
	N : Technopolymer body and metal inserts			●						
	P : Aluminum body			●	●		20 bar		-30°C +80°C	
	L : Aluminum body, low temperature			●	●				-40°C +80°C	
REGULATOR (R) (RM) (RW)	**T** : Technopolymer body and thread	●	●	●		13 bar	20 bar	-5°C +50°C	/	●
	N : Technopolymer body and metal inserts	●	●	●						
	P : Aluminum body		●	●	●				-30°C +80°C	
	L : Aluminum body, low temperature		●	●	●				-40°C +80°C	
PRESSURE REGULATOR FOR MANIFOLD (B) (M)	**T** : Technopolymer body and thread	●				13 bar	/	-5°C +50°C	/	●
	N : Technopolymer body and metal inserts	●								
	P : Aluminum body							/		
	L : Aluminum body, low temperature					/		/		
PILOTED PRESSURE REGULATOR (RP) (RMP) (RPP)	**T** : Technopolymer body and thread					/	/	/	/	●
	N : Technopolymer body and metal inserts									
	P : Aluminum body				●	/	20 bar	/	-30°C +80°C	
	L : Aluminum body, low temperature					/		/		
PILOTED PRESSURE REGULATOR WITH DIGITAL PRESSURE SWITCH (RPP) (RPZ)	**T** : Technopolymer body and thread					/	/	/	/	
	N : Technopolymer body and metal inserts									
	P : Aluminum body				●	/	20 bar	/	0°C +50°C	
	L : Aluminum body, low temperature					/		/		
FILTER REGULATOR (E) (EM) (EW)	**T** : Technopolymer body and thread	●	●	●		13 bar - 10 bar (automatic drain)	20 bar - 16 bar (automatic drain)	-5°C +50°C	/	●
	N : Technopolymer body and metal inserts	●	●	●						
	P : Aluminum body		●	●	●				-30°C +80°C	
	L : Aluminum body, low temperature		●	●	●				-40°C +80°C	
REGULATOR WITH DIGITAL PRESSURE SWITCH (RP) (RZ)	**T** : Technopolymer body and thread	●	●	●		13 bar	20 bar	0°C +50°C		
	N : Technopolymer body and metal inserts	●	●	●						
	P : Aluminum body		●	●	●					
	L : Aluminum body, low temperature		●	●	●					
FILTER REGULATOR WITH DIGITAL PRESSURE SWITCH (E) (EP) (EZ)	**T** : Technopolymer body and thread	●	●	●		13 bar - 10 bar (automatic drain)	20 bar - 16 bar (automatic drain)	0°C +50°C		
	N : Technopolymer body and metal inserts	●	●	●						
	P : Aluminum body		●	●	●					
	L : Aluminum body, low temperature		●	●	●					
LUBRICATOR (L)	**T** : Technopolymer body and thread	●	●	●		13 bar		-5°C +50°C		●
	N : Technopolymer body and metal inserts	●	●	●						
	P : Aluminum body		●	●	●					
	L : Aluminum body, low temperature					/		/		

PRODUCT	VERSION	SIZE				MAX. PRESSURE		MIN - MAX AMBIENT TEMPERATURE		ATEX
		Size 1	Size 2	Size 3	Size 4	Technopolymer body or bowl	Metal body and bowl	Technopolymer body or bowl	Metal body and bowl	
LUBRICATOR WITH ELECTRICAL MINIMUM LEVEL SENSOR (LA) (LC)	**T** : Technopolymer body and thread	●	●	●		13 bar		-5°C +50°C		
	N : Technopolymer body and metal inserts	●	●	●						
	P : Aluminum body		●	●	●					
	L : Aluminum body, low temperature					/		/		
SHUT OFF VALVE (VL)	**T** : Technopolymer body and thread	●	●	●		13 bar - 10 bar (for size 4)		-5°C +50°C	/	●
	N : Technopolymer body and metal inserts	●	●	●						
	P : Aluminum body		●	●	●				-30°C +80°C	
	L : Aluminum body, low temperature		●	●	●				-40°C +80°C	
PNEUMATIC SHUT OFF VALVE (VP)	**T** : Technopolymer body and thread	●	●	●		13 bar	20 bar	-5°C +50°C	/	●
	N : Technopolymer body and metal inserts	●	●	●						
	P : Aluminum body		●	●	●				-30°C +80°C	
	L : Aluminum body, low temperature		●	●	●				-40°C +80°C	
ELECTRIC SHUT OFF VALVE (VE)	**T** : Technopolymer body and thread	●	●	●		10 bar		-5°C +50°C		●
	N : Technopolymer body and metal inserts	●	●	●						
	P : Aluminum body		●	●	●					
	L : Aluminum body, low temperature					/		/		
PROGRESSIVE START-UP VALVE (AP)	**T** : Technopolymer body and thread	●	●	●		13 bar - 10 bar (for size 4)		-5°C +50°C		●
	N : Technopolymer body and metal inserts	●	●	●						
	P : Aluminum body		●	●	●					
	L : Aluminum body, low temperature		●	●	●					
AIR INTAKE (PA)	**T** : Technopolymer body and thread	●	●	●		13 bar	20 bar	-5°C +50°C	/	●
	N : Technopolymer body and metal inserts	●	●	●						
	P : Aluminum body		●	●	●				-30°C +80°C	
	L : Aluminum body, low temperature					/		/		
PRESSURE SWITCH (PP)	**T** : Technopolymer body and thread	●	●	●		13 bar	20 bar	-5°C +50°C		
	N : Technopolymer body and metal inserts	●	●	●						
	P : Aluminum body		●	●	●					
	L : Aluminum body, low temperature					/		/		
AIR INTAKE WITH INTEGRATED PRESSURE GAUGE (PM-PW)	**T** : Technopolymer body and thread	●	●	●		13 bar		-5°C +50°C	/	●
	N : Technopolymer body and metal inserts	●	●	●						
	P : Aluminum body		●	●	●				-30°C +80°C	
	L : Aluminum body, low temperature					/		/		
AIR INTAKE WITH INTEGRATED DIGITAL PRESSURE SWITCH (PP-PZ)	**T** : Technopolymer body and thread	●	●	●		13 bar		0°C +50°C		
	N : Technopolymer body and metal inserts	●	●	●						
	P : Aluminum body		●	●	●					
	L : Aluminum body, low temperature					/		/		

Overall dimensions and technical information are provided solely for informative purposes and may be modified without notice

Air service units, series AIRPLUS

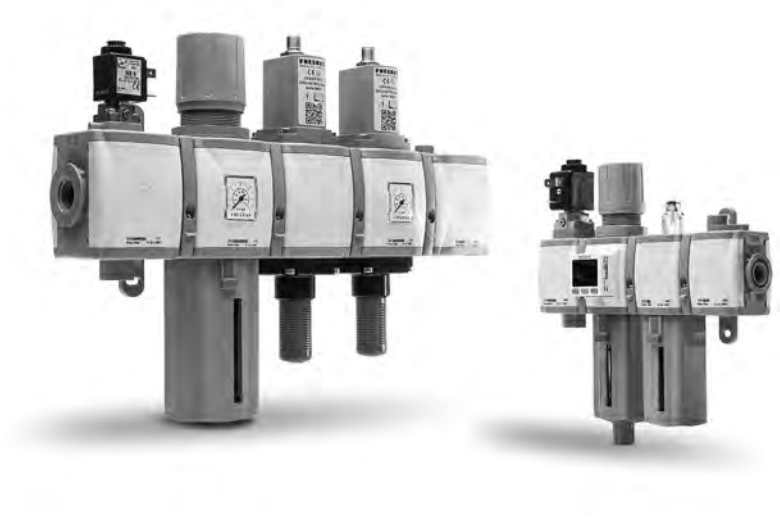

- **Modular system**
- **Compact and linear design**
- **Maximum flexibility and reliability**
- **Plug-n-play connection thru couplig flanges**
- **Integral safety elements in assembled group**
- **Available in 4 sizes with connections from 1/8” to 1”**
- **ATEX certification (II 2GD or II 3GD)**

Construction and working characteristics
Pneumax AIRPLUS air treatment units have been designed and developed to increase reliability, modularity and user-friendly operation and installation.
Thanks to a wide range of modules with different functions and characteristics, together with a wide choice of materials selection, make the Pneumax AIRPLUS air treatment units a robust, reliable and extremely flexible modular system, adaptable to many applications.
AIRPLUS units correctly assembled are modular with unlimited configurations and solutions, capable of fulfilling all functions of compressed air treatment such as filtration, regulation, lubrication, interception and distribution.
Filters, including coalescing and active carbon elements as well as oil separators provide adequate media filtration. Precise and reliable pressure regulation is provided by the regulators or filter-regulators which are also available with a built in pressure gauge or integral digital pressure switch.The lubricators provide oil mist lubrication in proportion to air being consumed whilst the shut-off valves, which can be operated pneumatic, electro-pneumatic or manually will effectively manage the supply and exhaust of the compressed air system.
The range is completed by a series of complementary modules, such as pneumatic connection by-pass, pressure switch and progressive start-up.
The complete assembly is built up using the individual modules connected together via quick coupling flanges which provide a ‘plug & play’ assembly. This provides quick and easy installation or replacement.
Pneumax Airplus air treatment units can be integrated with safety elements that comply with EN-ISO 13849-1 and CE marking according to EU Machinery Directive, Annex V.
AIRPLUS air treatment units are available in 4 different sizes, with connections from 1/8 “to 1” and flow rates performances up to 8000Nl/min.

Instruction for installation and operation
The FRL unit should be installed as close as possible to the ‘point of use’. The air flow direction should follow the direction indicated on the individual modules, following threaded connections (IN and OUT). Units fitted with a with bowl should be mounted vertically with the bowl facing down.
All units should be operated in accordance to the specified pressure and temperature ranges and should never exceed 0.2 Hz max frequency whether pulsing inlet pressure occur.
Fittings shall be mounted according to the maximum torque specified.

Maintenance
To carry out maintenance which involves the removal of the caps or supports above the body and where the retaining screws are present, it is necessary to remove the cover plates beforehand. If you attempt to dis-assemble the caps or supports without removing the cover plates and retaining screws, the integrity and function of the device could be compromised.
Bowls, plugs and supports are assembled with a bayonet type mechanism. In order to remove them, rotate anti-clockwise until the mechanical stop is reached and then remove from the body (for the bowls firstly press down the green safety button).
Bowls and transparent parts can be cleaned with water and neutral soap. Do not use solvents or alcohol.
Filtering elements (present in filters and filter regulators) made of HDPE can be regenerated by washing and blowing them.
In order to remove them it is necessary to remove the bowl unscrew the filter element and replace it with a new one or clean it.
Lubricator oil recharge might be performed during normal operation (apart TG1 size) depressurizing the bowl thru dedicated plug.
Pneumax suggest refilling oil directly into the bowl.
No others maintenance operation shall be carried out by client itself, due to complexity of the assembly and Pneumax dedicated post-maintenance testing activities.

FILTRATION

Filter pore sizes
from 50 μm to 5μm

Coalescing filter with
retention efficiency of 99,97%
particle removal down to 0,01 μm

Coalescing/oil removal filter
with oil residual up to 0,01 ppm

Carbon filter
with oil residual up to < 0,003 ppm

REGULATION

Regulators and filter regulators

Pressure regulation range up to 12 bar

Available with
integrated pressure gauge,
pressure switch or G1/8" connection

LUBRICATION

Manual adjustment of oil quantity
complete with visual indicator

Oil refilled with
pressurized circuit

Oil mist lubrication

SHUT OFF

Manual, pneumatic
or electropneumatic
operation availability

Manual version lockable
up to 3 padlock

COMPLEMENTARY MODULES

Pressure switch

Air intake

Progressive start-up valve

SAFETY

Integrated diagnostic system

Single version CAT.2
in accordance with
ISO EN 13849 up to PL=C

Double version CAT.4
in accordance with
ISO EN 13849 up to PL=E

In accordance with
EU Machynery directive,
annex V

Overall dimensions and technical information are provided solely for informative purposes and may be modified without notice

Filters (F)

- Double filter action: air flow centrifugation and filter element
- Available in 4 sizes with flow rates up to 14000 Nl/min and connections from 1/8” to 1”
- Filtering cartridge made of HDPE available in three different filtration grades (5μm, 20μm, 50μm)
- Filter cartridge can be regenerated by washing / blowing it or replaced
- Bowl assembly via bayonet type quick coupling mechanism with safety button
- Semi-automatic or automatic drain
- Atex certification (II 2GD or II 3GD)
- Inlet pressures up to 20 bar

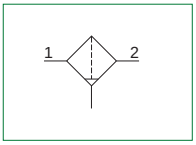

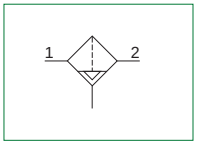

Note
In order to ensure that any fluid discharged by the auto drain assembly is adequately drained away, it is recommended you use a 6mm fitting and tube.

Technical characteristics					
Size		**Size 1**	**Size 2**	**Size 3**	**Size 4**
Body and connections type		Technopolymer body, integrated technopolymer connections (T version) Technopolymer body, metal connections (N version)			/ /
		/	Aluminium body, integrated aluminium connections (P - L versions)		
Protection and bowl type		Technopolymer protection - PC bowl Technopolymer protection - PA bowl			
			Metal protection - PC bowl Metal protection - PA bowl Metal bowl (blind metal bowl)		
IN / OUT connections	**T version**	G1/4”	G3/8”	G1/2”	not available
	N version	G1/8” - G1/4” - 1/4” NPT	G3/8” - G1/4” - 3/8” NPT	G3/8” - G1/2” - 1/2” NPT	
	P and L version	not available	G3/8” - 1/4” NPT	G1/2” - 1/2” NPT	G1” - 1” NPT
Assembly configuration		Stand alone			
					Panel mounted
Assembly positions		Vertical ±5°			
Filter pore size		5 μm 20 μm 50 μm			
Bowl capacity		18 cm³	34 cm³	68 cm³	90 cm³
Condensation drain		Semi-automatic Automatic			
Max. fittings torque IN / OUT connections		G1/8” metal: 15Nm G1/4” metal: 20Nm G1/4” technopolymer: 9Nm	G1/4” metal: 20Nm G3/8” metal: 25Nm G3/8” technopolymer: 16Nm	G3/8” metal: 25Nm G1/2” metal: 30Nm G1/2” technopolymer: 22Nm	G1”metal: 35Nm

Operational characteristics								
Size	**Size 1**	**Size 2**	**Size 3**	**Size 4**	**Size 1**	**Size 2**	**Size 3**	**Size 4**
Condensation drain	**Semi-automatic**				**Automatic**			
Maximum working pressure	13 bar				10 bar			
		20 bar (only with body and metal bowl)				16 bar (only with body and metal bowl)		
Minimum working pressure	0,5 bar				0,5 bar			
Working temperature	-5°C +50°C				-5°C +50°C			
		-30°C +80°C (only for P version and metal bowl) -40°C +80°C (only for L version and metal bowl)						

Weights				
Size	Size 1	Size 2	Size 3	Size 4
Fully technopolymer version	129 g	226 g	355 g	/
Technopolymer body version, aluminium bowl protection and technopolymer bowl	/	257 g	393 g	/
Technopolymer body version, aluminium bowl	/	301 g	465 g	/
Aluminium body version, technopolymer protection and bowl	/	314 g	477 g	1163 g
Aluminium body version, aluminium bowl protection and technopolymer bowl	/	344 g	514 g	1306 g
Aluminium body version and aluminium bowl	/	389 g	587 g	1330 g

Materials
Exploded sectioned

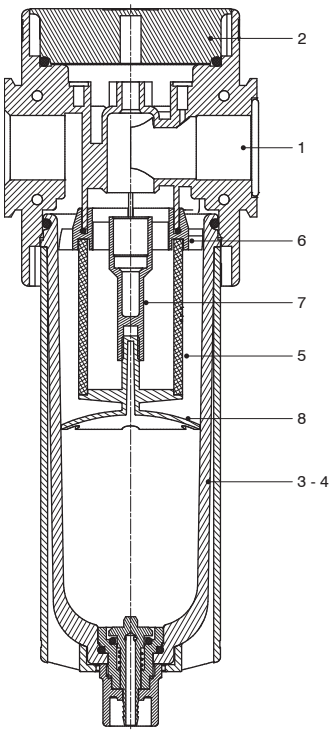

Filter		
1	Body	Polyamide Die-cast aluminium
2	Plug	Polyamide
3	Technopolymer bowl	Polycarbonate Polyamide
4	Metal bowl Bowl protection	Die-cast aluminium Polyamide - Die-cast aluminium
5	Filtering element	Polyethylene
6	Baffle	Acetal resin
7	Spool support	Acetal resin
8	Filtering element support	Acetal resin

Design

Size 1 - Size 2 - Size 3
Technopolymer protection

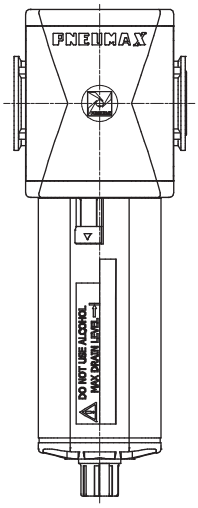

Size 1 - Size 2 - Size 3
Protection / Metal bowl

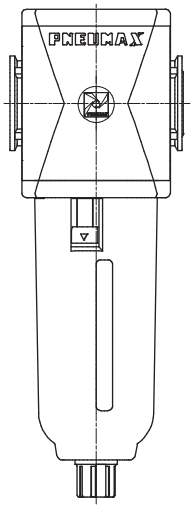

Size 4
All versions

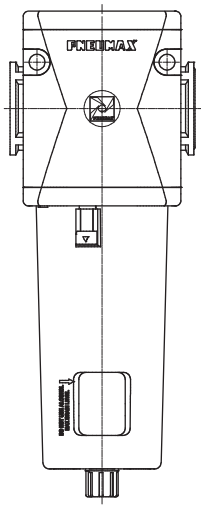

Overall dimensions and technical information are provided solely for informative purposes and may be modified without notice

Order codes

T	17	3B	F	B	S	T

Version
N : Technopolymer body and metal inserts (not available for size 4)
T : Technopolymer body and thread (not available for size 4)
P : Aluminum body (not available for size 1)
L : Aluminum body, low temperature (not available for size 1)

Size and connections
1A : Size 1 - G1/8” only for N version
1B : Size 1 - G1/4” only for T - N versions
1C : Size 1 - 1/4” NPT only for N version
2A : Size 2 - G1/4” only for N version
2B : Size 2 - G3/8” for all versions
2C : Size 2 - 3/8” NPT only for N version - 1/4” NPT only for P - L versions
3A : Size 3 - G3/8” only for N version
3B : Size 3 - G1/2” for all versions
3C : Size 3 - 1/2” NPT only for N - P - L versions
4B : Size 4 - G1” only for P - L versions
4C : Size 4 - 1” NPT only for P - L versions

Filter pore size
A : 5 μm
B : 20 μm
C : 50 μm

Condensation drain
: Semi-automatic drain
S : Automatic drain

Bowl options
: Technopolymer protection - PC bowl
N : Technopolymer protection - PA bowl
P : Metal protection - PC bowl (not available for size 1)
R : Metal protection - PA bowl (not available for size 1)
T : Metal bowl (not available for size 1)

Example : T173BFBST : Size 3 filter G1/2” 20 μm, automatic drain and metal bowl

Characteristic curves

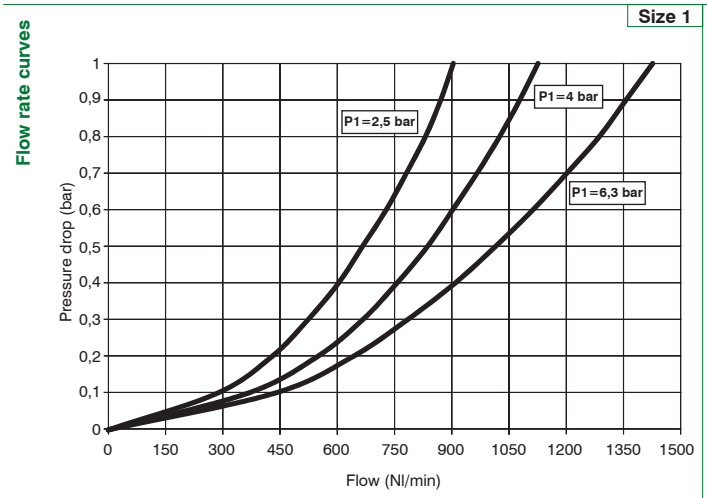

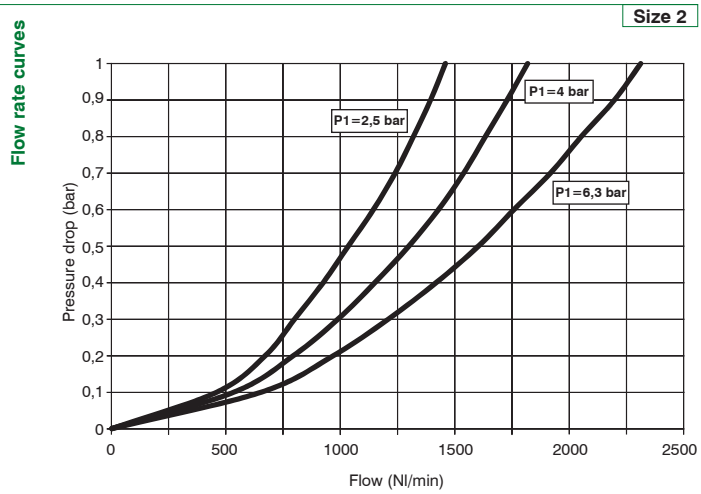

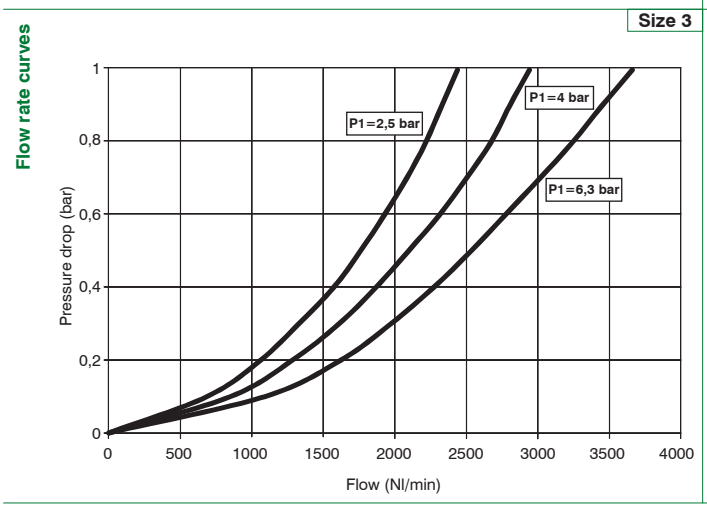

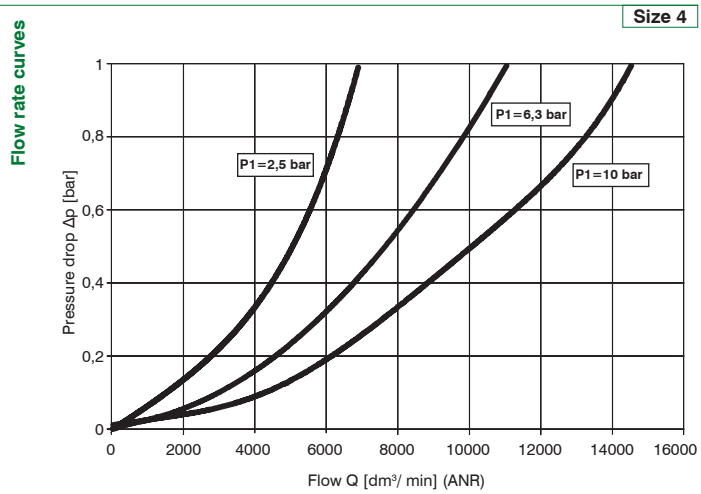

Dimensions

Semi-automatic drain version

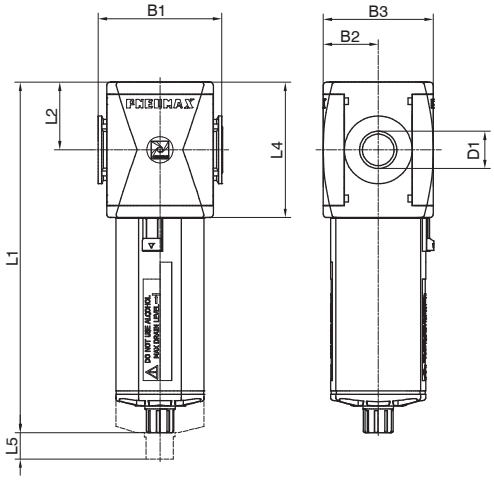

Fixing holes dimension detail
(only for size 4)

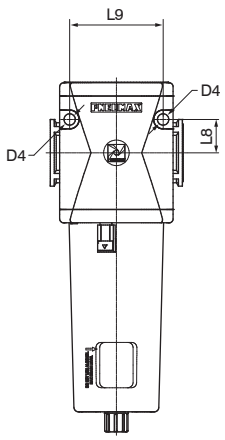

Model	B1	B2	B3	D1	D4	L1 - Bowl material		L2	L4	L5	L8	L9
						Technopolymer	Metal					
#171..	48	21	42	G1/8” G1/4” 1/4” NPT	/	148	/	27,5	55	40	/	/
#172..	62	28,5	57	G1/4” G3/8” 1/4” NPT 3/8” NPT	/	169,1	171,5	34	68	50	/	/
#173..	73	32,5	65	G3/8” G1/2” 1/2” NPT	/	207,2	209,5	40	80	65	/	/
#174..	99	44	88	G1” 1” NPT	8,5	262	264,5	52,5	105	103	25	70

Overall dimensions and technical information are provided solely for informative purposes and may be modified without notice

Variable dimensions

Semi-automatic drain version

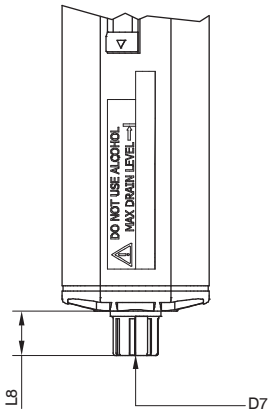

Automatic drain version

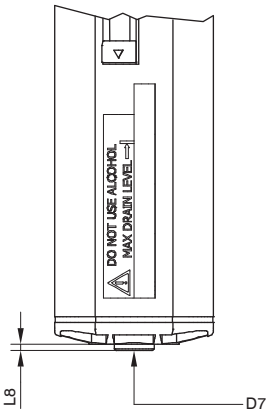

Model	L8 - Bowl material		D7
	Technopolymer	Metal	
Semi-automatic drain	15,7	18	Plastic hose connector
Automatic drain	2	4,5	G1/8”

Coalescing filters (DA)

- Coalescing filter
- Available in 4 sizes with flow rates up to 8000 Nl/min and connections from 1/8” to 1”
- Filtering cartridge with filtration grade of 0,01 μm
- Filtering performances 99.97% (particles up to 0.01 μm)
- Bowl assembly via bayonet type quick coupling mechanism with safety button
- Semi-automatic or automatic drain
- Atex certification (II 2GD or II 3GD)
- Inlet pressures up to 20 bar

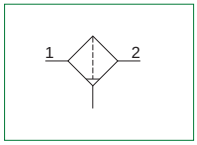

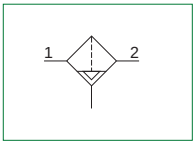

Note
In order to ensure the high level of filtration, it is recommended that a 5μ filter is installed before the coalescing filter. In order to ensure that any fluid discharged by the auto drain assembly is adequately drained away, it is recommended you use a 6mm fitting and tube.

Technical characteristics					
Size		**Size 1**	**Size 2**	**Size 3**	**Size 4**
Body and connections type		Technopolymer body, integrated technopolymer connections (T version) Technopolymer body, metal connections (N version)			/ /
		/	Aluminium body, integrated aluminium connections (P - L versions)		
Protection and bowl type		Technopolymer protection - PC bowl Technopolymer protection - PA bowl			
			Metal protection - PC bowl Metal protection - PA bowl Metal bowl (blind metal bowl)		
IN / OUT connections	**T version**	G1/4”	G3/8”	G1/2”	not available
	N version	G1/8” - G1/4” - 1/4” NPT	G3/8” - G1/4” - 3/8” NPT	G3/8” - G1/2” - 1/2” NPT	
	P and L version	not available	G3/8”	G1/2”	G1”
Assembly configuration		Stand alone			
					Panel mounted
Assembly positions		Vertical ±5°			
Filter pore size		0,01 μm, efficiency of 99,97%			
Bowl capacity		18 cm³	34 cm³	68 cm³	90 cm³
Condensation drain		Semi-automatic Automatic			
Max. fittings torque IN / OUT connections		G1/8” metal: 15Nm G1/4” metal: 20Nm G1/4” technopolymer: 9Nm	G1/4” metal: 20Nm G3/8” metal: 25Nm G3/8” technopolymer: 16Nm	G3/8” metal: 25Nm G1/2” metal: 30Nm G1/2” technopolymer: 22Nm	G1”metal: 35Nm

Operational characteristics								
Size	**Size 1**	**Size 2**	**Size 3**	**Size 4**	**Size 1**	**Size 2**	**Size 3**	**Size 4**
Condensation drain	**Semi-automatic**				**Automatic**			
Maximum working pressure	13 bar				10 bar			
		20 bar (only with body and metal bowl)				16 bar (only with body and metal bowl)		
Minimum working pressure	0,5 bar				0,5 bar			
Working temperature	-5°C +50°C				-5°C +50°C			
		-30°C +80°C (only for P version and metal bowl) -40°C +80°C (only for L version and metal bowl)						

Overall dimensions and technical information are provided solely for informative purposes and may be modified without notice

Weights				
Size	Size 1	Size 2	Size 3	Size 4
Fully technopolymer version	130 g	224 g	366 g	/
Technopolymer body version, aluminium bowl protection and technopolymer bowl	/	251 g	402 g	/
Technopolymer body version, aluminium bowl	/	293 g	475 g	/
Aluminium body version, technopolymer protection and bowl	/	309 g	493 g	1197 g
Aluminium body version, aluminium bowl protection and technopolymer bowl	/	337 g	529 g	1340 g
Aluminium body version and aluminium bowl	/	378 g	603 g	1365 g

Materials
Exploded sectioned

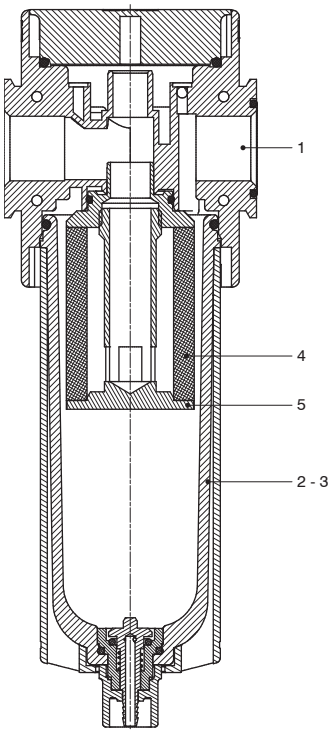

Coalescing filter		
1	Body	Polyamide Die-cast aluminium
2	Technopolymer bowl	Polycarbonate Polyamide
3	Metal bowl Bowl protection	Die-cast aluminium Polyamide - Die-cast aluminium
4	Filtering element	Borosilicate glass fiber
5	Filtering element support	Aluminium

Design

Size 1 - Size 2 - Size 3
Technopolymer protection

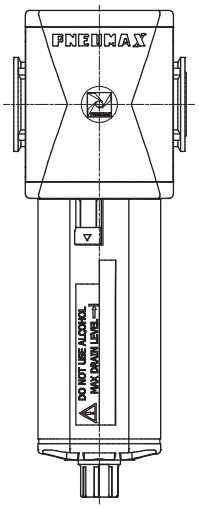

Size 1 - Size 2 - Size 3
Protection / Metal bowl

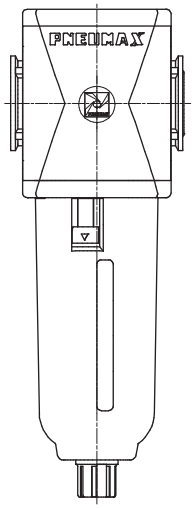

Size 4
All versions

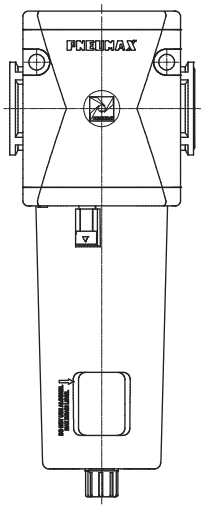

Order codes

T 17 3B DA S T

Version
N : Technopolymer body and metal inserts (not available for size 4)
T : Technopolymer body and thread (not available for size 4)
P : Aluminum body (not available for size 1)
L : Aluminum body, low temperature (not available for size 1)

Size and connections
1A : Size 1 - G1/8” only for N version
1B : Size 1 - G1/4” only for T - N versions
1C : Size 1 - 1/4” NPT only for N version
2A : Size 2 - G1/4” only for N version
2B : Size 2 - G3/8” for all versions
2C : Size 2 - 3/8” NPT only for N version
3A : Size 3 - G3/8” only for N version
3B : Size 3 - G1/2” for all versions
3C : Size 3 - 1/2” NPT only for N version
4B : Size 4 - G1” only for P - L versions

Condensation drain
: Semi-automatic drain
S : Automatic drain

Bowl options
: Technopolymer protection - PC bowl
N : Technopolymer protection - PA bowl
P : Metal protection - PC bowl (not available for size 1)
R : Metal protection - PA bowl (not available for size 1)
T : Metal bowl (not available for size 1)

Example : T173BDAST : Size 3 coalescing filter G1/2” 0,01 μm, automatic drain and metal bowl

Overall dimensions and technical information are provided solely for informative purposes and may be modified without notice

Characteristic curves

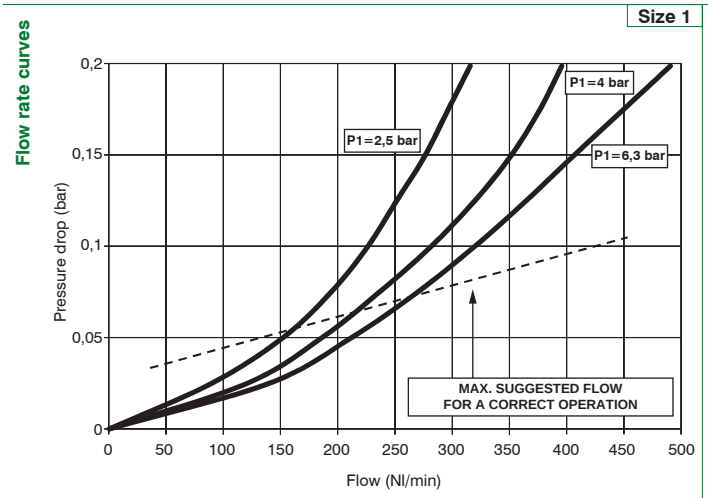

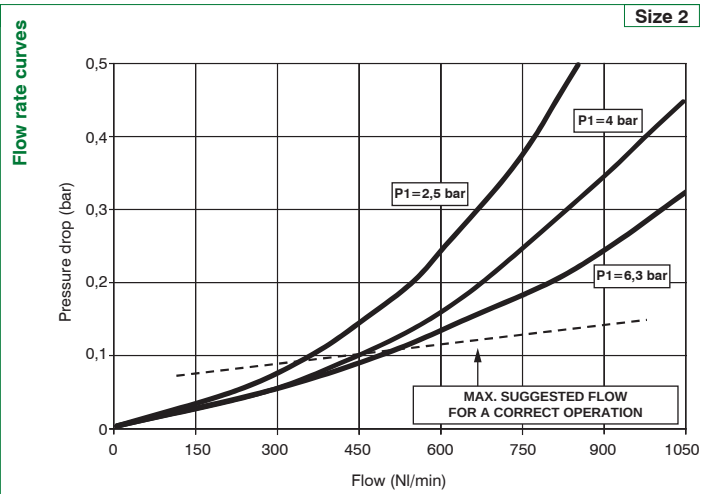

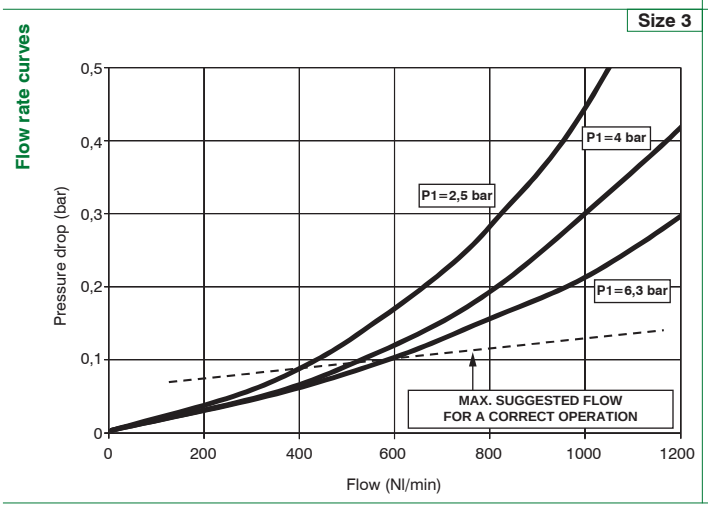

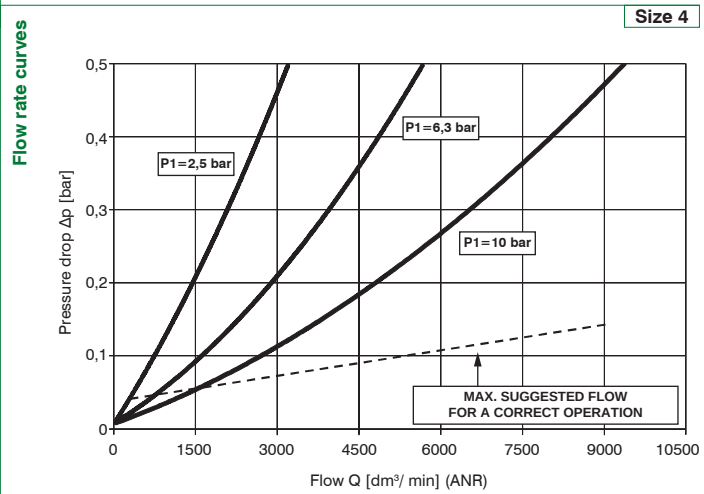

Dimensions

Semi-automatic drain version

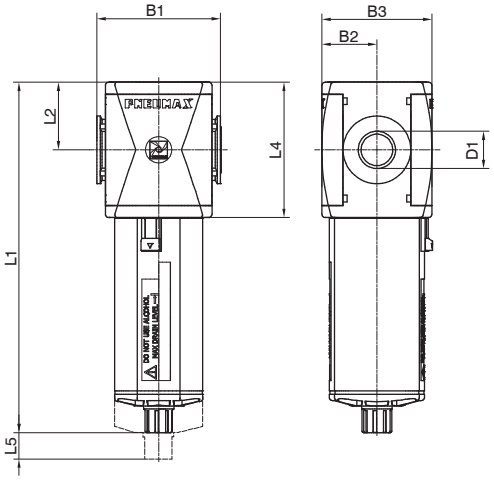

Fixing holes dimension detail
(only for size 4)

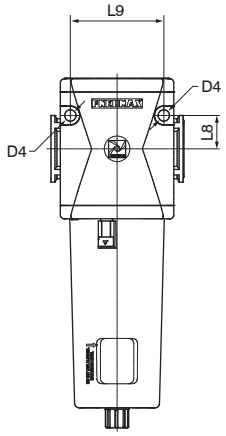

Model	B1	B2	B3	D1	D4	L1 - Bowl material		L2	L4	L5	L8	L9
						Technopolymer	Metal					
#171..	48	21	42	G1/8” G1/4” 1/4” NPT	/	148	/	27,5	55	40	/	/
#172..	62	28,5	57	G1/4” G3/8” 1/4” NPT 3/8” NPT	/	169,1	171,5	34	68	50	/	/
#173..	73	32,5	65	G3/8” G1/2” 1/2” NPT	/	207,2	209,5	40	80	65	/	/
#174..	99	44	88	G1” 1” NPT	8,5	262	264,5	52,5	105	103	25	70

Variable dimensions

Semi-automatic drain version

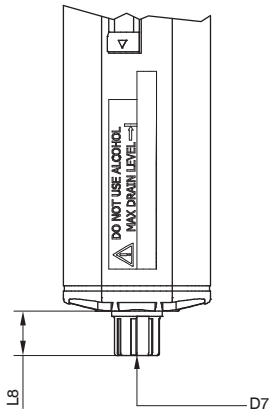

Automatic drain version

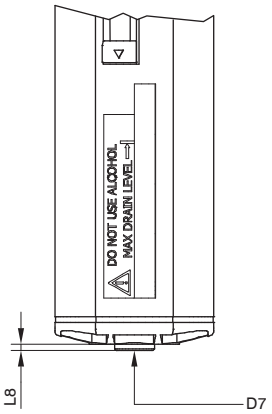

Model	L8 - Bowl material		D7
	Technopolymer	Metal	
Semi-automatic drain	15,7	18	Plastic hose connector
Automatic drain	2	4,5	G1/8”

Overall dimensions and technical information are provided solely for informative purposes and may be modified without notice

Oil removal filters (DBV - DCV - DAV)

- Oil removal filter with coalescing filter element
- Available in 2 sizes with connections from 3/8” to 1”
- Particle removal up to 0,01 μm
- Oil residual 0,01 ppm
- Cartridge clogging level display:
  - green color - ok
  - red color - warning (Δp>0,5 bar)
- Bowl assembly via bayonet type quick coupling mechanism with safety button
- Automatic drain mounted as standard
- Atex certification (II 2GD or II 3GD)

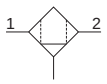

Note
In order to ensure the high level of filtration, it is recommended that a 5μ filter is installed before the coalescing filter. In order to ensure that any fluid discharged by the auto drain assembly is adequately drained away, it is recommended you use a 6mm fitting and tube.

Technical characteristics			
Size		**Size 3**	**Size 4**
Body and connections type		Technopolymer body, integrated technopolymer connections (T version) Technopolymer body, metal connections (N version)	
		Aluminium body, integrated aluminium connections (P version)	
Protection and bowl type		Technopolymer protection - PC bowl Technopolymer protection - PA bowl Metal protection - PC bowl Metal protection - PA bowl Metal bowl (blind metal bowl)	
IN / OUT connections	**T version**	G1/2”	not available
	N version	G3/8” - G1/2” - 1/2” NPT	
	P version	G1/2”	G1”
Assembly configuration		Stand alone	
			Panel mounted
Assembly positions		Vertical ±5°	
Filter pore size		Particle removal up to 0,01 μm Oil residual 0,01 ppm	
Bowl capacity		30 cm³	90 cm³
Condensation drain		Automatic	
Max. fittings torque IN / OUT connections		G3/8” metal: 25Nm G1/2” metal: 30Nm G1/2” technopolymer: 22Nm	G1”metal: 35Nm

Operational characteristics		
Size	**Size 3**	**Size 4**
Condensation drain	**Automatic**	
Maximum working pressure	10 bar	
Minimum working pressure	0,5 bar	
Working temperature	-5°C +50°C	

Weights			
Size	Size 3 Standard cartridge	Size 3 Oversize cartridge	Size 4
Fully technopolymer version	416 g	634 g	/
Technopolymer body version, aluminium bowl protection and technopolymer bowl	453 g	671 g	/
Technopolymer body version, aluminium bowl	526 g	742 g	/
Aluminium body version, technopolymer protection and bowl	538 g	661 g	1230 g
Aluminium body version, aluminium bowl protection and technopolymer bowl	575 g	698 g	1374 g
Aluminium body version and aluminium bowl	647 g	769 g	1398 g

Materials

Exploded sectioned

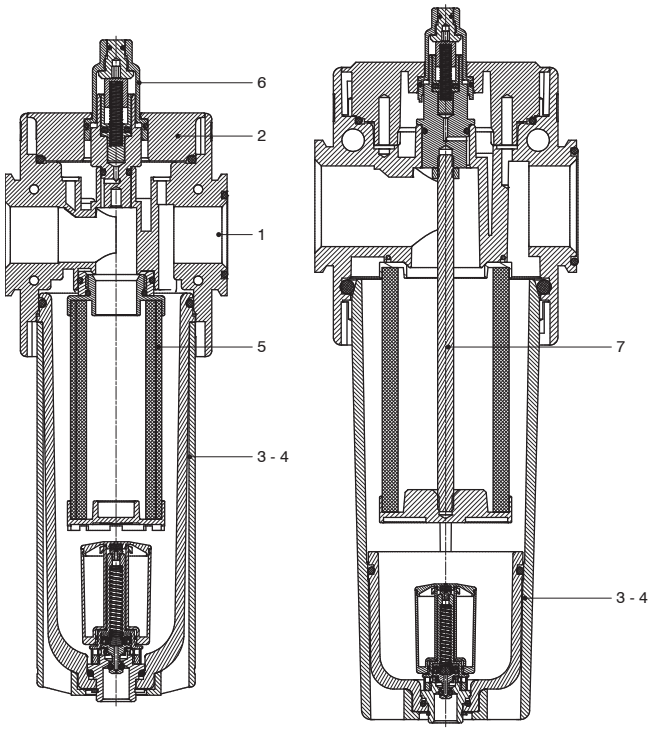

Oil removal filter		
1	Body	Polyamide Die-cast aluminium
2	Upper plug	Polyamide
3	Technopolymer bowl	Polycarbonate Polyamide
4	Metal bowl Bowl protection	Die-cast aluminium Polyamide - Die-cast aluminium
5	Filtering element	/
6	Visual indicator	Polycarbonate
7	Tie rod	Steel (only for size 4)
8	Automatic drain	/

Design

Size 3
Technopolymer protection

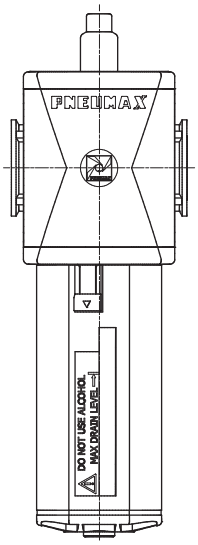

Size 3
Protection / Metal bowl

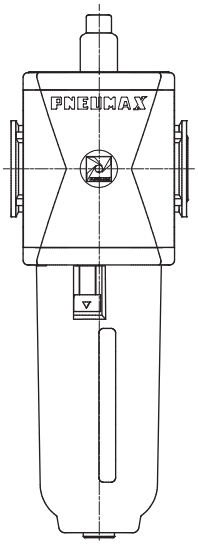

Size 3 - Oversize cartridge
Technopolymer protection

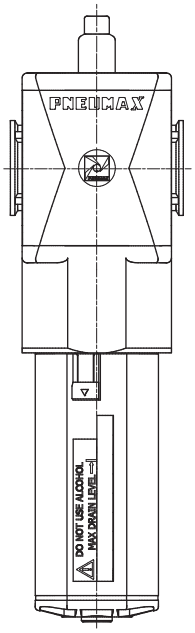

Size 4
All versions

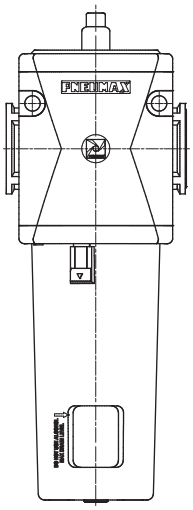

Overall dimensions and technical information are provided solely for informative purposes and may be modified without notice

Order codes

T	17	3BDBV	T

Version
N : Technopolymer body and metal inserts (not available for size 4)
T : Technopolymer body and thread (not available for size 4)
P : Aluminium body

Size and connections
3ADBV : Size 3 - G3/8” standard cartridge only for N version
3BDBV : Size 3 - G1/2” standard cartridge for all versions
3CDBV : Size 3 - 1/2” NPT standard cartridge only for N version
3BDCV : Size 3 - G1/2” oversize cartridge only for P version
4BDAV : Size 4 - G1” standard cartridge only for P version

Bowl options
: Technopolymer protection - PC bowl
N : Technopolymer protection - PA bowl
P : Metal protection - PC bowl
R : Metal protection - PA bowl
T : Metal bowl

Example : T173BDBVT : Size 3 oil removal filter G1/2”, standard cartridge, metal bowl

Characteristic curves

Size 3 - Standard cartridge

Efficiency curves

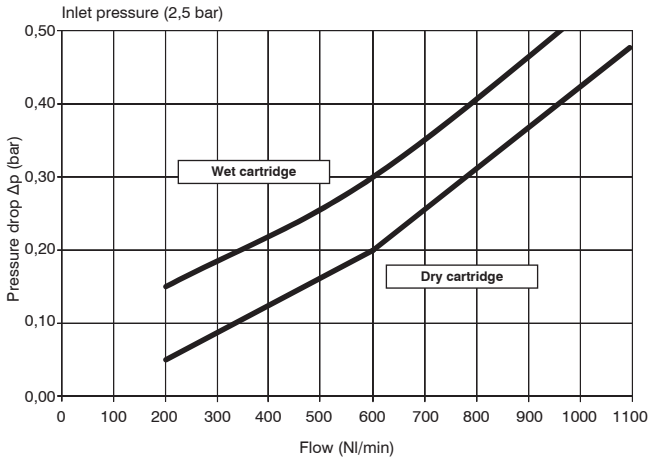

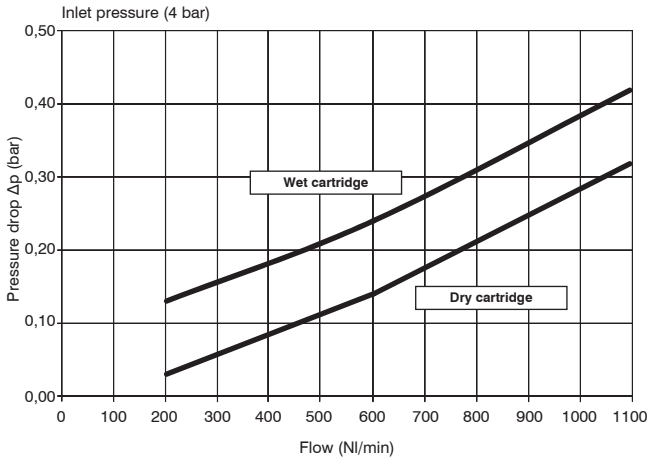

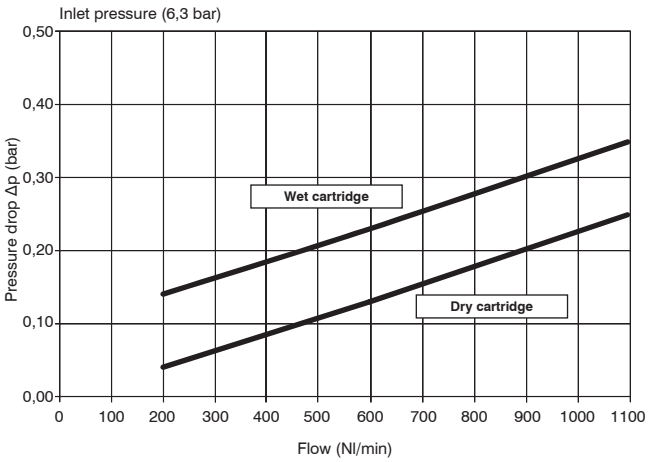

Size 3 - Oversize cartridge

Efficiency curves

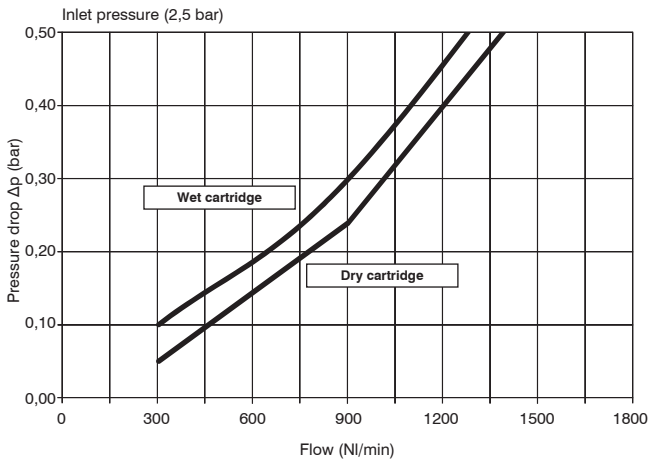

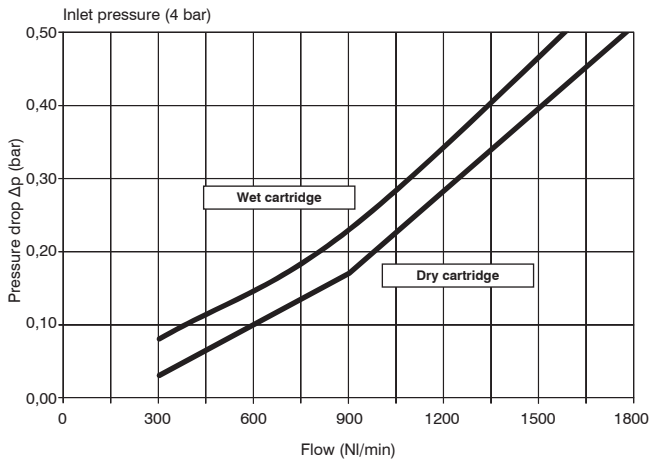

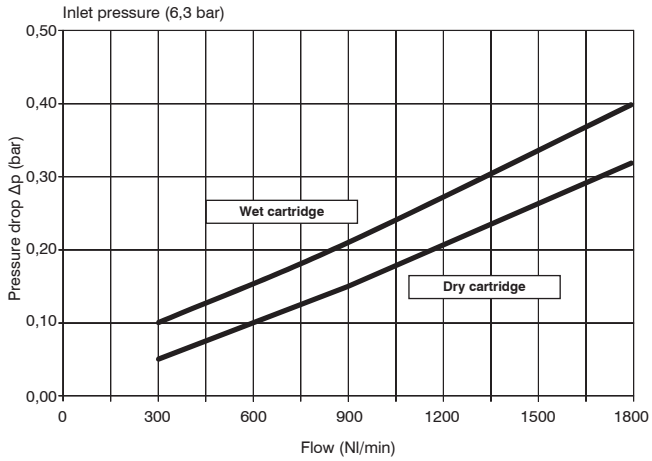

Size 4 - Standard cartridge

Efficiency curves

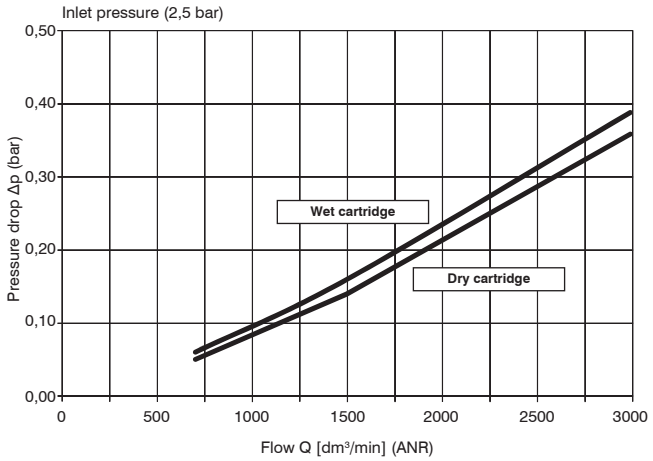

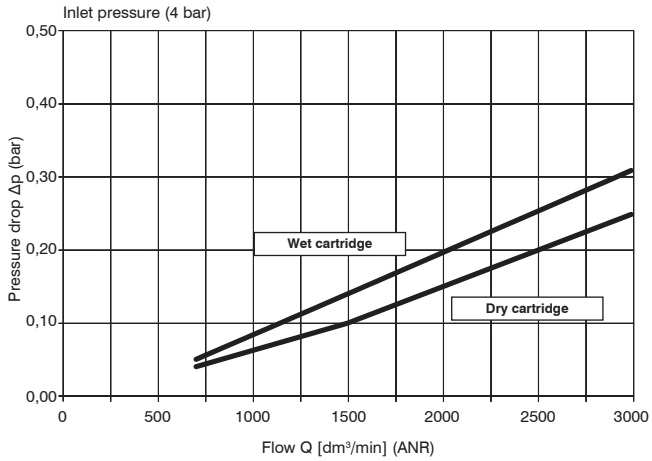

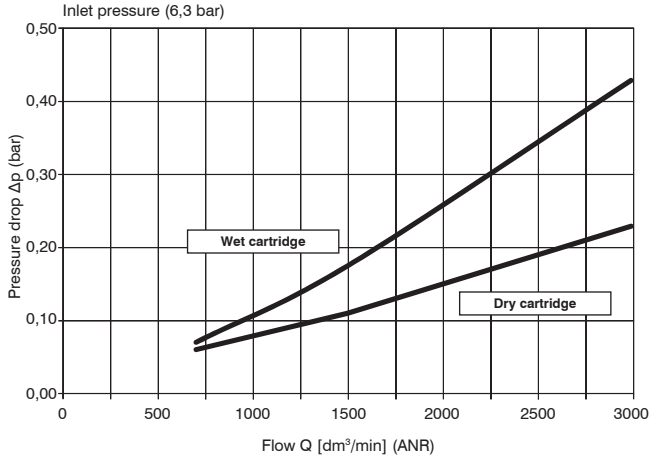

Overall dimensions and technical information are provided solely for informative purposes and may be modified without notice

Dimensions

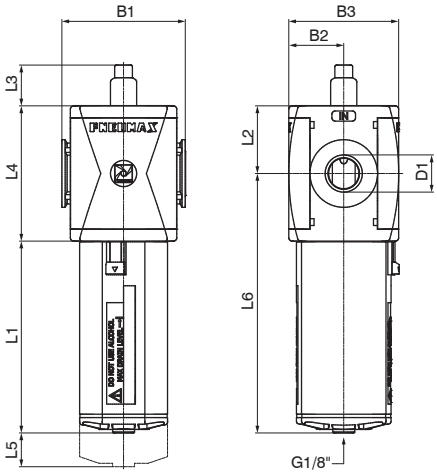

Fixing holes dimension detail
(only for size 4)

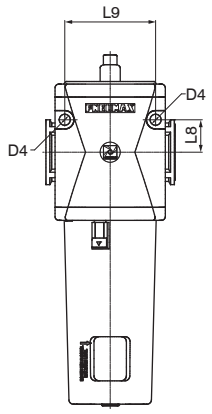

Model	B1	B2	B3	D1		L1 - Bowl material		L3	L4		L5	L8	L9
				Standard cartridge	Oversize cartridge	Technopolymer	Metal		Standard cartridge	Oversize cartridge			
#173..	73	32,5	65	G3/8” G1/2” 1/2” NPT	G1/2”	113,5	116	24,1	80	118	65	/	/
#174..	99	44	88	G1”	/	143	145,5	22,5	105	/	103	25	70

Carbon filters (DD)

- Carbon filter
- Available in 2 sizes with connections from 3/8” to 1”
- Active carbon cartridge with built in particulate filter
- Used to remove oil vapours, hydrocarbons, odours and particles
- Oil residue up to <0,003 ppm (max imput aereosol 0.01 ppm)
- High absorption capacity, with low differential pressure
- Filtering performances 99.97% (particles up to 0.01 μm)
- Bowl assembly via bayonet type quick coupling mechanism with safety button
- Semi-automatic drain
- Atex certification (II 2GD or II 3GD)
- Inlet pressures up to 20 bar

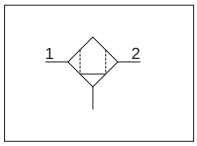

Note
A 5μ filter, coalescing filter and oil removing filter must be installed prior to the carbon filter, this is to ensure that the carbon filter operates correctly and safe guard the life of the active carbon element. It may also be necessary to replace the carbon element at fixed intervals.

Technical characteristics			
Size		**Size 3**	**Size 4**
Body and connections type		Technopolymer body, integrated technopolymer connections (T version) Technopolymer body, metal connections (N version)	/ /
		Aluminium body, integrated aluminium connections (P - L versions)	
Protection and bowl type		Technopolymer protection - PC bowl Technopolymer protection - PA bowl Metal protection - PC bowl Metal protection - PA bowl Metal bowl (blind metal bowl)	
IN / OUT connections	**T version**	G1/2”	not available
	N version	G3/8” - G1/2” - 1/2” NPT	
	P and L version	G1/2”	G1”
Assembly configuration		Stand alone	Panel mounted
Assembly positions		Vertical ±5°	
Oil residue		< 0,003 ppm (max imput aereosol 0.01 ppm)	
Bowl capacity		68 cm³	90 cm³
Condensation drain		Semi-automatic	
Max. fittings torque IN / OUT connections		G3/8” metal: 25Nm G1/2” metal: 30Nm G1/2” technopolymer: 22Nm	G1”metal: 35Nm

Operational characteristics		
Size	**Size 3**	**Size 4**
Condensation drain	**Semi-automatic**	
Maximum working pressure	13 bar 20 bar (only with body and metal bowl)	
Minimum working pressure	0,5 bar	
Working temperature	-5°C +50°C -30°C +80°C (only for P version and metal bowl) -40°C +80°C (only for L version and metal bowl)	
Cartridge life	2000 hours	

Overall dimensions and technical information are provided solely for informative purposes and may be modified without notice

Weights		
Size	Size 3	Size 4
Fully technopolymer version	395 g	/
Technopolymer body version, aluminium bowl protection and technopolymer bowl	432 g	/
Technopolymer body version, aluminium bowl	505 g	/
Aluminium body version, technopolymer protection and bowl	518 g	1201 g
Aluminium body version, aluminium bowl protection and technopolymer bowl	554 g	1344 g
Aluminium body version and aluminium bowl	628 g	1368 g

Materials
Exploded sectioned

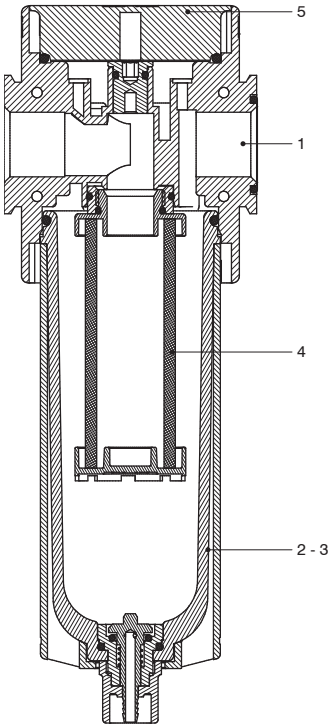

Carbon filter		
1	Body	Polyamide Die-cast aluminium
2	Technopolymer bowl	Polycarbonate Polyamide
3	Metal bowl Bowl protection	Die-cast aluminium Polyamide - Die-cast aluminium
4	Filtering element	Activated carbon
5	Plug	Polyamide Die-cast aluminium

Design

Size 3
Technopolymer protection

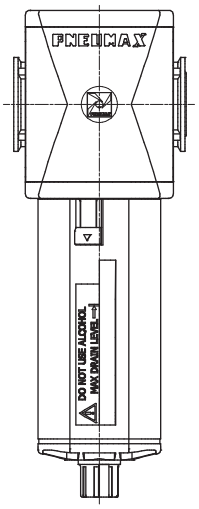

Size 3
Protection / Metal bowl

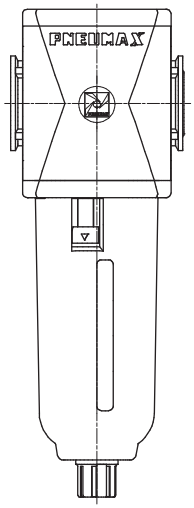

Size 4
All versions

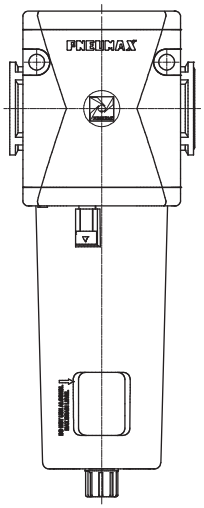

Order codes

T 17 3B DD T

Version
N : Technopolymer body and metal inserts (not available for size 4)
T : Technopolymer body and thread (not available for size 4)
P : Aluminium body
L : Aluminium body, low temperature

Size and connections
3A : Size 3 - G3/8” only for N version
3B : Size 3 - G1/2” for all versions
3C : Size 3 - 1/2” NPT only for N version
4B : Size 4 - G1” only for P - L versions

Bowl options
: Technopolymer protection - PC bowl
N : Technopolymer protection - PA bowl
P : Metal protection - PC bowl
R : Metal protection - PA bowl
T : Metal bowl

Example : T173BDDT : Size 3 carbon filter G1/2” metal bowl

Overall dimensions and technical information are provided solely for informative purposes and may be modified without notice

Characteristic curves

Size 3

Efficiency curves

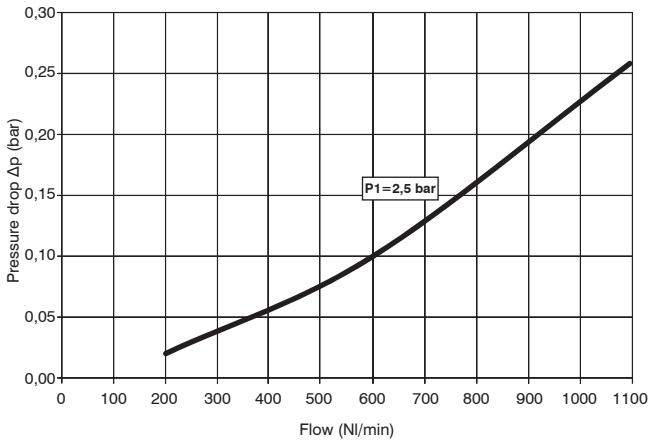

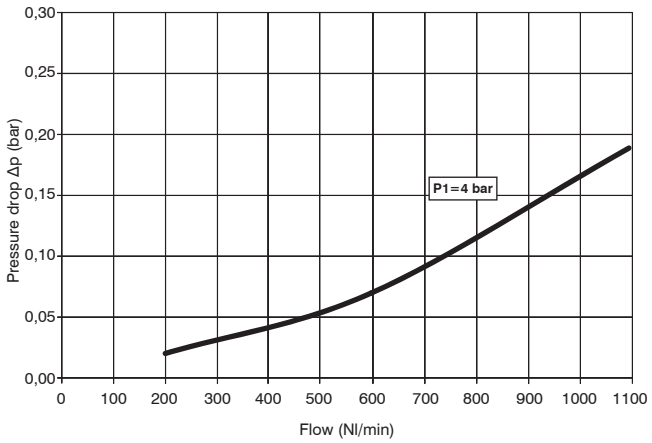

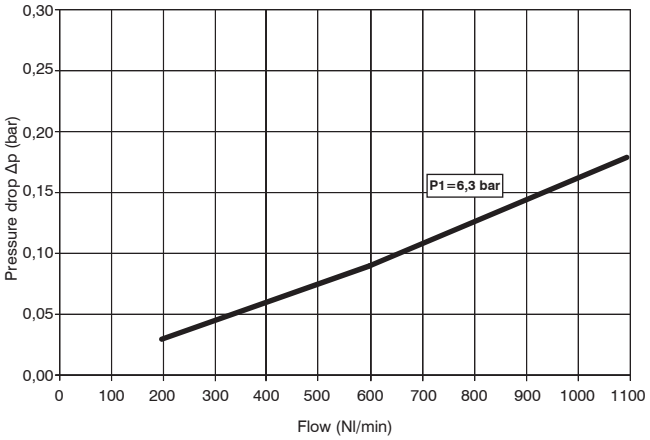

Size 4

Efficiency curves

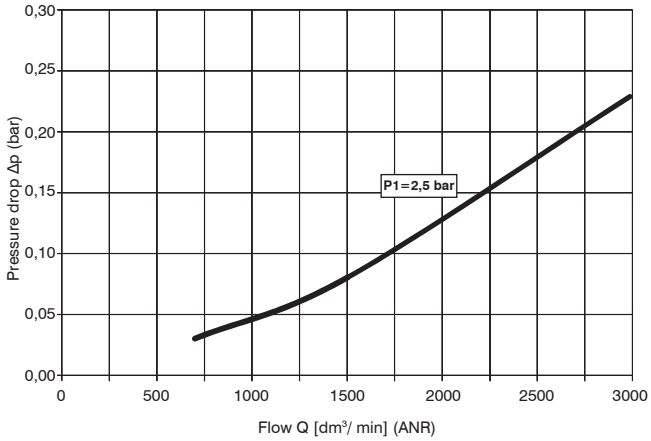

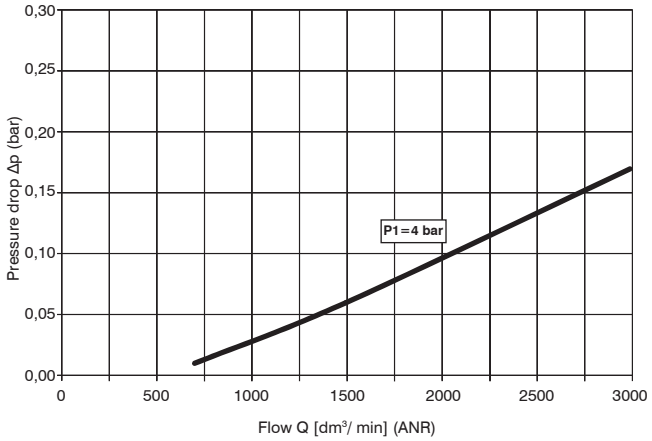

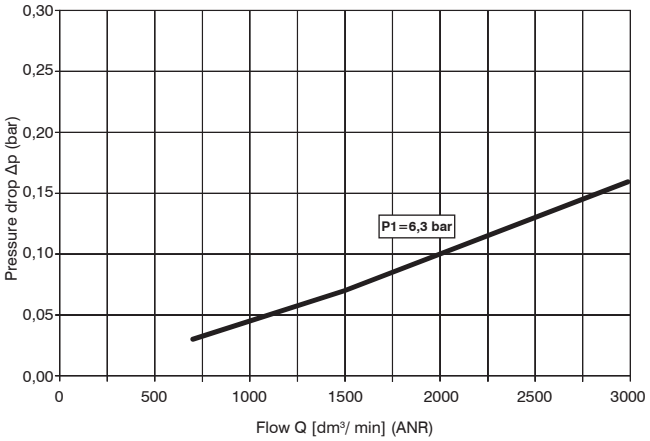

Dimensions

Semi-automatic drain version

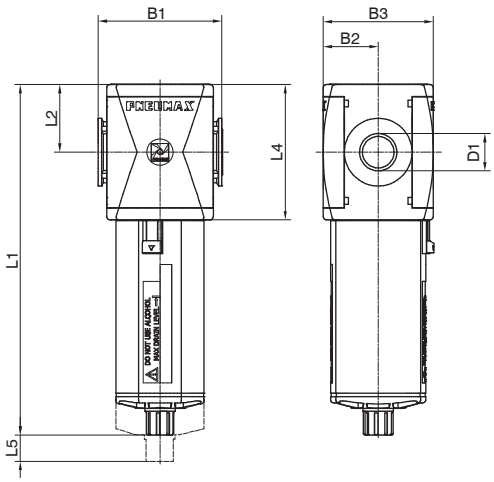

Fixing holes dimension detail
(only for size 4)

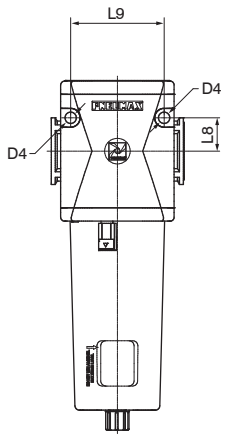

Model	B1	B2	B3	D1	D4	L1 - Bowl material		L2	L4	L5	L8	L9
						Technopolymer	Metal					
#173..	73	32,5	65	G3/8” G1/2” 1/2” NPT	/	207,2	209,5	40	80	65	/	/
#174..	99	44	88	G1” 1” NPT	8,5	262	264,5	52,5	105	103	25	70

Variable dimensions

Semi-automatic drain version

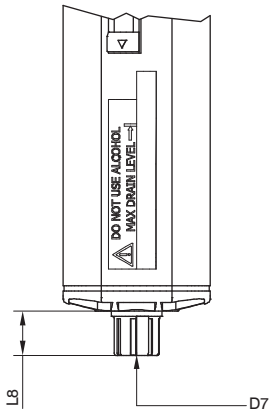

Model	L8 - Bowl material		D7
	Technopolymer	Metal	
Semi-automatic drain	15,7	18	Plastic hose connector

Overall dimensions and technical information are provided solely for informative purposes and may be modified without notice

Filter regulators (E - EM - EW - EP - EZ)

- Filter - diaphragm pressure regulator with relieving
- Available in 4 sizes with flow rates up to 8000 Nl/min and connections from 1/8” to 1”
- Low histeresis rolling diaphragm and balanced spool
- Filtering element made of HDPE available in 3 different filtration grades (5μm, 20μm and 50μm)
- Bowl assembly via bayonet type quick coupling mechanism with safety button
- Semi-automatic or automatic drain
- Available in four pressure ranges up to 12 bar
- Fitted with panel mounting locking ring
- Available with pressure gauge or digital pressure switch integrated
- Atex certification (II 2GD or II 3GD)
- Inlet pressures up to 20 bar

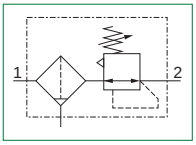

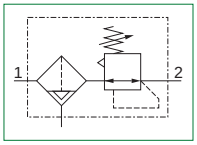

Note
For installations where a more accurate and constant pressure is required, the unit should be installed as close as possible to the point of use. In order to ensure that any fluid discharged by the auto drain assembly is adequately drained away, it is recommended you use a 6mm fitting and tube.

Technical characteristics

Size		Size 1	Size 2	Size 3	Size 4
Body and connections type		Technopolymer body, integrated technopolymer connections (T version) Technopolymer body, metal connections (N version)			/ /
		/	Aluminium body, integrated aluminium connections (P - L versions)		
Protection and bowl type		Technopolymer protection - PC bowl Technopolymer protection - PA bowl			
			Metal protection - PC bowl Metal protection - PA bowl Metal bowl (blind metal bowl)		
IN / OUT connections	**T version**	G1/4”	G3/8”	G1/2”	not available
	N version	G1/8” - G1/4” - 1/4” NPT	G3/8” - G1/4” - 3/8” NPT	G3/8” - G1/2” - 1/2” NPT	
	P and L version	not available	G3/8” - 1/4” NPT	G1/2” - 1/2” NPT	G1” - 1” NPT
Assembly configuration		Stand alone Panel mounting With fixing bracket /			Panel mounted
Assembly positions		Vertical ±5°			
Filter pore size		5 μm 20 μm 50 μm			
Pressure range		0-2 bar 0-4 bar 0-8 bar 0-12 bar (P2 max 10 Bar in case of digital pressure switch selection)			
Bowl capacity		18 cm^3	34 cm^3	68 cm^3	90 cm^3
Condensation drain		Semi-automatic Automatic			
Regulation		Manul push and lock with pressure Manual lockable with accessories			
Pressure measurement		G1/8” - 1/8” NPT pressure gauge connection port (only for versions with IN / OUT NPT connections) Integrated pressure gauge (optional) Digital pressure switch (optional)			
Max. fittings torque IN / OUT connections		G1/8” metal: 15Nm G1/4” metal: 20Nm G1/4” technopolymer: 9Nm	G1/4” metal: 20Nm G3/8” metal: 25Nm G3/8” technopolymer: 16Nm	G3/8” metal: 25Nm G1/2” metal: 30Nm G1/2” technopolymer: 22Nm	G1”metal: 35Nm
Max.fitting torque pressure gauge connection port		G1/8” technopolymer: 4Nm G1/8” metal: 15Nm			

Operational characteristics

Size	Size 1	Size 2	Size 3	Size 4	Size 1	Size 2	Size 3	Size 4
Condensation drain	**Semi-automatic**				**Automatic**			
Maximum working pressure	13 bar	20 bar (only with body and metal bowl)			10 bar	16 bar (only with body and metal bowl)		
Minimum working pressure	0,5 bar				0,5 bar			
Working temperature	-5°C +50°C	-30°C +80°C (only for P version and metal bowl) -40°C +80°C (only for L version and metal bowl)			-5°C +50°C			
Working temperature with digital pressure switch	0°C +50°C							

Weights				
Size	Size 1	Size 2	Size 3	Size 4
Fully technopolymer version	210 g	410 g	500 g	/
Technopolymer body version, aluminium bowl protection and technopolymer bowl	/	440 g	600 g	/
Technopolymer body version, aluminium bowl	/	460 g	660 g	/
Aluminium body version, technopolymer protection and bowl	/	480 g	710 g	1460 g
Aluminium body version, aluminium bowl protection and technopolymer bowl	/	510 g	730 g	1600 g
Aluminium body version and aluminium bowl	/	560 g	790 g	1620 g

Materials
Exploded sectioned

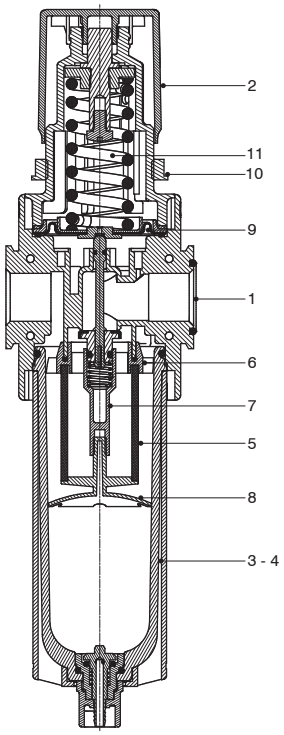

Filter regulator		
1	Body	Polyamide Die-cast aluminium
2	Adjusting knob	Polyamide
3	Technopolymer bowl	Polycarbonate Polyamide
4	Metal bowl Bowl protection	Die-cast aluminium Polyamide - Die-cast aluminium
5	Filtering element	Polyethylene
6	Baffle	Acetal resin
7	Spool support	Acetal resin
8	Filtering element support	Acetal resin
9	Diaphragm	NBR
10	Panel mounting locking ring	Polyamide
11	Adjusting spring	Steel

Design

Size 1 - Size 2 - Size 3
Technopolymer protection

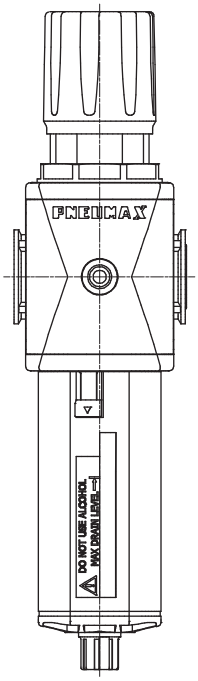

Size 1 - Size 2 - Size 3
Protection / Metal bowl

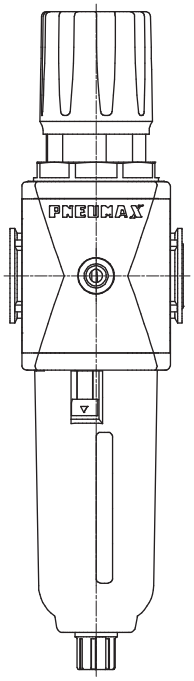

Size 4
All versions

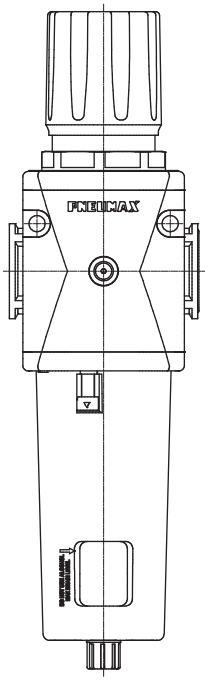

Overall dimensions and technical information are provided solely for informative purposes and may be modified without notice

Order codes

T	17	3B	E	M	B	D	S				T

Version
N : Technopolymer body and metal inserts (not available for size 4)
T : Technopolymer body and thread (not available for size 4)
P : Aluminum body (not available for size 1)
L : Aluminum body, low temperature (not available for size 1)

Size and connections
1A : Size 1 - G1/8” only for N version
1B : Size 1 - G1/4” only for T - N versions
1C : Size 1 - 1/4” NPT only for N version
2A : Size 2 - G1/4” only for N version
2B : Size 2 - G3/8” for all versions
2C : Size 2 - 3/8” NPT only for N version - 1/4” NPT only for P - L versions
3A : Size 3 - G3/8” only for N version
3B : Size 3 - G1/2” for all versions
3C : Size 3 - 1/2” NPT only for N - P - L versions
4B : Size 4 - G1” only for P - L versions
4C : Size 4 - 1” NPT only for P - L versions

Pressure measurement options
: G1/8” - 1/8” NPT thread
M : Integrated pressure gauge
W : Integrated pressure gauge Right - Left
P : Digital pressure switch
Z : Digital pressure switch Right - Left

Filter pore size
A : 5 μm
B : 20 μm
C : 50 μm

Pressure range
A : 0 - 2 bar
B : 0 - 4 bar
C : 0 - 8 bar
D : 0 - 12 bar

Condensation drain
: Semi-automatic drain
S : Automatic drain

Relieving options
: With relieving
L : Without relieving

Knob options
: Non-lockable version
K : Lockable version
U : Lockable version with universal key

Digital pressure switch options
A : Cable 150 mm + M8 PNP
B : Cable 150 mm + M8 NPN
C : Cable 2 m PNP
D : Cable 2 m NPN

Bowl options
: Technopolymer protection - PC bowl
N : Technopolymer protection - PA bowl
P : Metal protection - PC bowl (not available for size 1)
R : Metal protection - PA bowl (not available for size 1)
T : Metal bowl (not available for size 1)

Example : T173BEMBDST : Size 3 filter regulator G1/2” 20 μm 0 - 12 bar, automatic drain and metal bowl

Characteristic curves

Size 1 - G1/4" 0-8 bar P1=7 bar

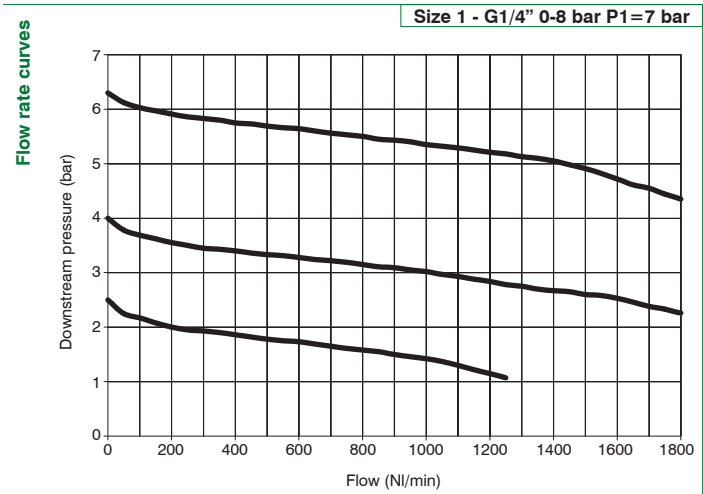

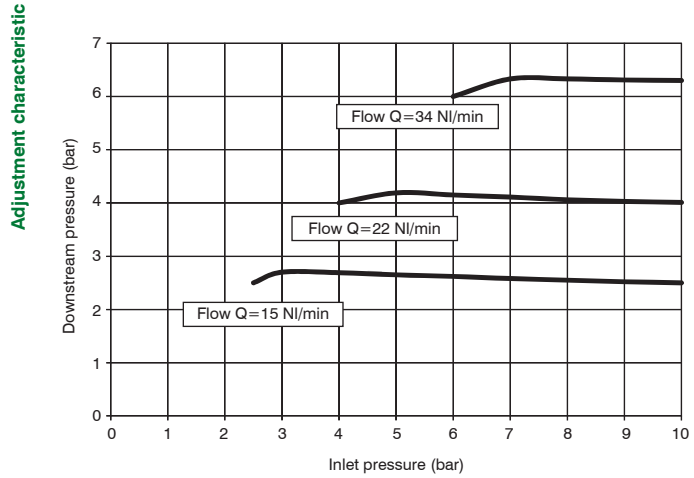

Size 2 - G3/8" 0-8 bar P1=7 bar

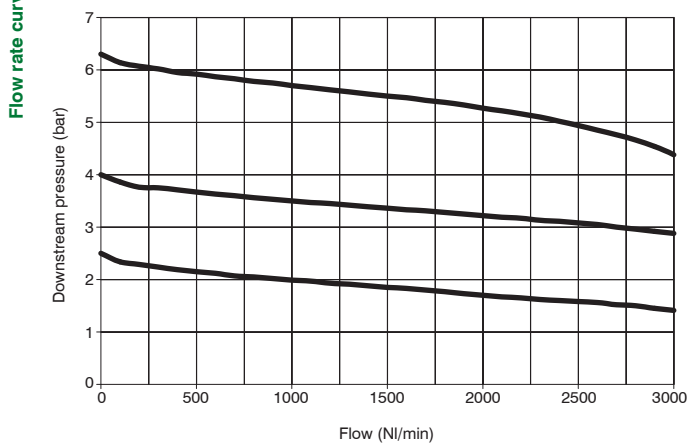

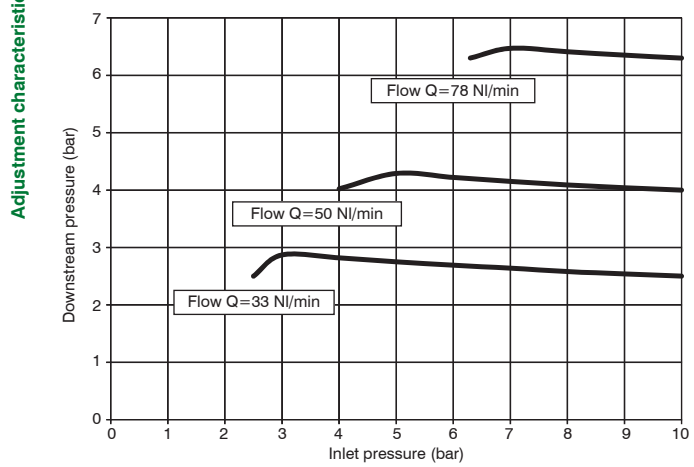

Size 3 - G1/2" 0-8 bar P1=7 bar

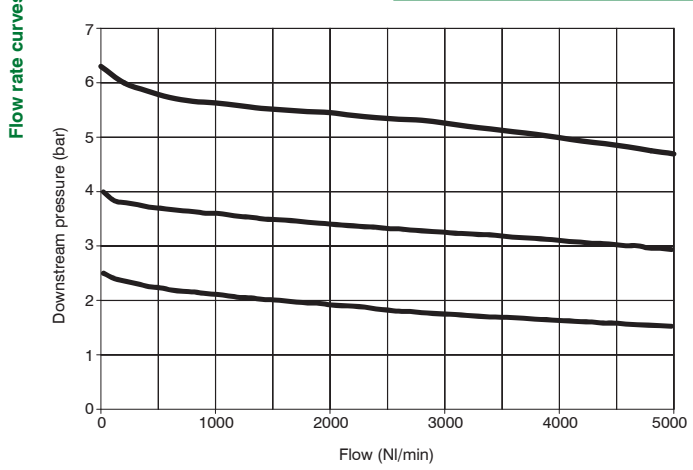

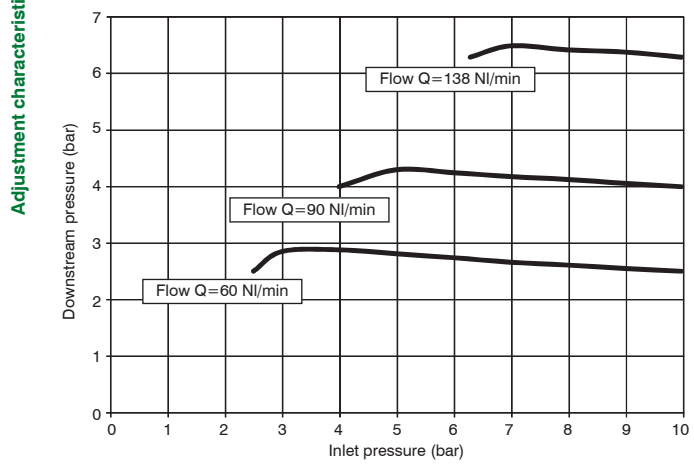

Size 4 - G1" 0-8 bar P1=10 bar

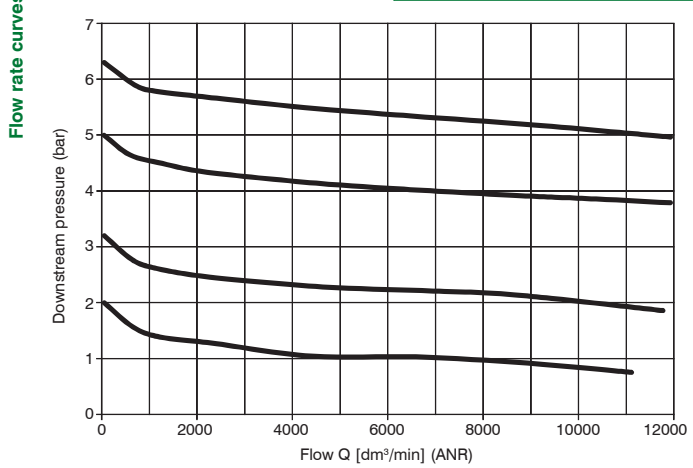

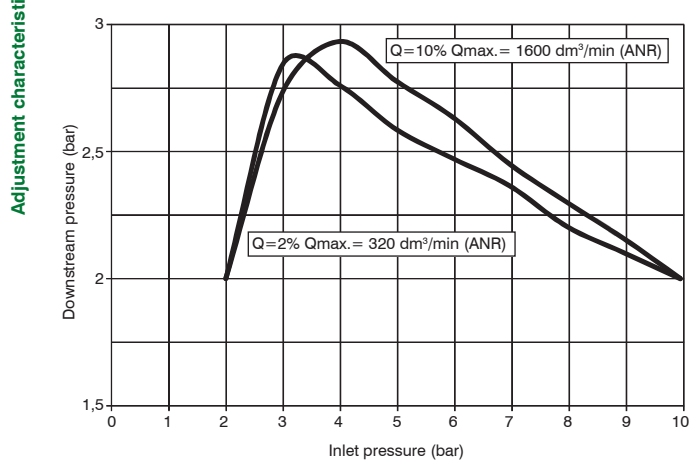

Overall dimensions and technical information are provided solely for informative purposes and may be modified without notice

Dimensions

Pressure gauge connection port and semi-automatic drain version

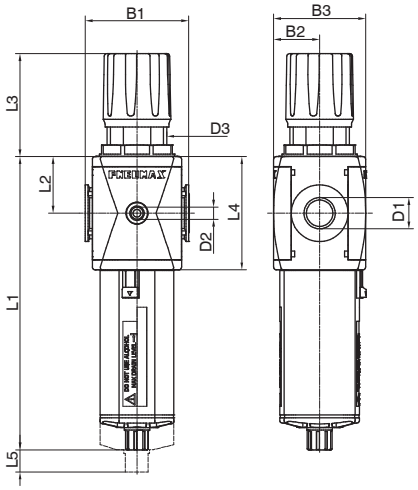

Fixing holes dimension detail (only for size 4)

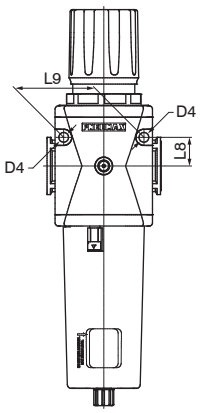

Model	B1	B2	B3	D1	D2	D3	D4	L1 - Bowl material		L2	L3	L4	L5	L8	L9
								Technopolymer	Metal						
#171..	48	21	42	G1/8” G1/4” 1/4” NPT	G1/8” 1/8” NPT	M30x1,5	/	148	/	27,5	54	55	40	/	/
#172..	62	28,5	57	G1/4” G3/8” 1/4” NPT 3/8” NPT	G1/8” 1/8” NPT	M42x1,5	/	169,1	171,5	34	71,8	68	50	/	/
#173..	73	32,5	65	G3/8” G1/2” 1/2” NPT	G1/8” 1/8” NPT	M42x1,5	/	207,2	209,5	40	72,8	80	65	/	/
#174..	99	44	88	G1” 1” NPT	G1/8” 1/8” NPT	M54x1,5	8,5	262	264,5	52,5	87,5	105	103	25	70

Variable dimensions

Integrated pressure gauge version

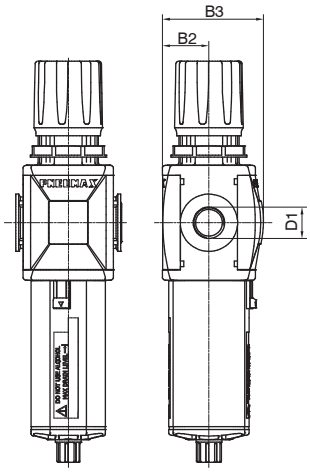

Integrated digital pressure switch version

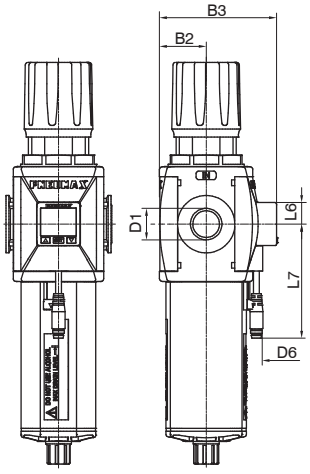

Model	B2	B3		D1	D6 - Type of digital pressure switch		L6	L7 - Type of digital pressure switch	
		With pressure gauge	With digital pressure switch		A - B	C - D		A - B	C - D
#171..	21	48,5	60	G1/8” G1/4” 1/4” NPT	M8 - 3 PIN	3 x 0,129 mm, Ø4 mm	15	150	2000
#172..	28,5	62,5	73,5	G1/4” G3/8” 1/4” NPT 3/8” NPT					
#173..	32,5	70,5	81,5	G3/8” G1/2” 1/2” NPT					
#174..	44	90,5	101,5	G1” 1” NPT					

Variable dimensions

Semi-automatic drain version

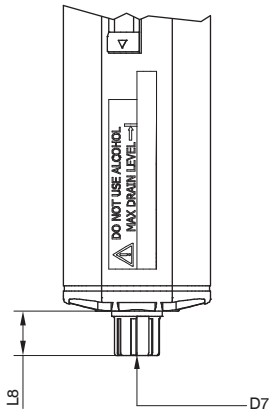

Automatic drain version

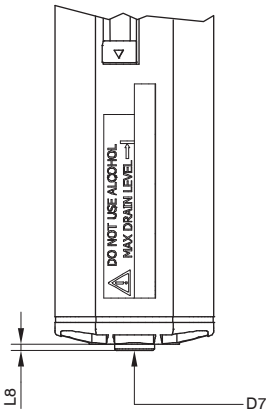

Model	L8 - Bowl material		D7
	Technopolymer	Metal	
Semi-automatic drain	15,7	18	Plastic hose connector
Automatic drain	2	4,5	G1/8”

Overall dimensions and technical information are provided solely for informative purposes and may be modified without notice

Digital pressure switch

- 3 color digital LCD display, easy readout
- 4 units of measurement for pressure indication
- Optional PNP or NPN digital output
- N.O. and N.C. output contact selection directly on the digital pressure switch
- Available with M8-3PIN connector or 3 wire cable length 2 m
- Available only in combination with a filter regulator

Output circuit wiring diagrams

PNP output

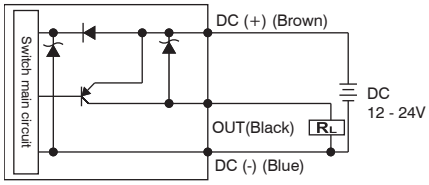

NPN output

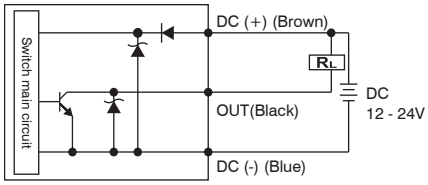

Digital pressure switch lay out

M8 connector pin layout

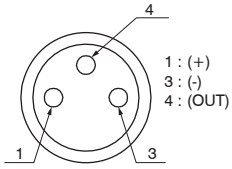

3 wires cable layout

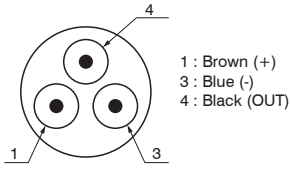

Cable ordering code

MCH1 : cable 3 wires l=2,5m with M8 connector
MCH2 : cable 3 wires l=5m with M8 connector
MCH3 : cable 3 wires l=10m with M8 connector

Connector

Technical characteristics	
Pressure range and display	0 - 10 bar
Max. inlet pressure	15 bar
Fluid	40μm filtered and dehumidified air
Display unit of measurement	MPa - kgf/cm^2 - bar - psi
Supply voltage	12 - 24 VDC
Current consumption	≤40mA (without load)
Digital output type	PNP - NPN
Type of contact output	Normally Open - Normally Closed
Max. load current	125 mA
Digital output activation mode	single threshold with fixed hysteresis - window with fixed hysteresis - window without hysteresis
Digital output activation time	0.05s - 0.25s - 0.5s - 1s - 2s - 3s (selections for chattering-proof options)
Display characteristics	Double 3 1/2 digit display Digital output status indication Three-pushbuttons touchpad
Indicator accuracy	≤±2% full scale value ± 1 digit
IP Rating	IP40
Working temperature	0°C +50°C
Cable section	3 x 0,129mm2, Ø4 mm, PVC

Fixing bracket

T172 50

Size
171 : Size 1
T172 : Size 2 - Size 3

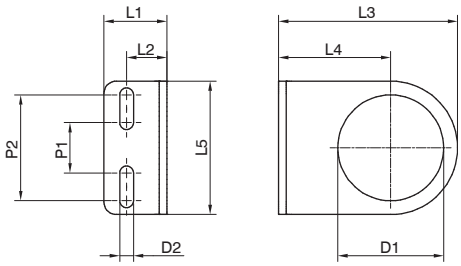

Model	L1	L2	L3	L4	L5	D1	D2	P1	P2
17150	20	13	50	30	40	30	5,5	20	30
T17250	25	16	71	44,5	53	42	5,5	20	42

Pressure gauge

17070 A C

Version
A : Dial Ø40
B : Dial Ø50

Scale
A : 0 - 4 bar
B : 0 - 6 bar
C : 0 - 12 bar

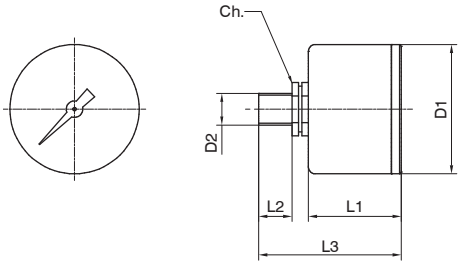

Model	L1	L2	L3	D1	D2	Ch
17070A..	26	10	44	41	Gc - 1/8”	14
17070B..	27	10	45	49	Gc - 1/8”	14

Overall dimensions and technical information are provided solely for informative purposes and may be modified without notice

Regulators (R - RM - RW - RP - RZ)

- Diaphragm pressure regulator with relieving
- Available in 4 sizes with flow rates up to 8000 Nl/min and connections from 1/8” to 1”
- Low histeresis rolling diaphragm and balanced spool
- Available in four pressure ranges up to 12 bar
- Fitted with panel mounting locking ring
- Available with pressure gauge or digital pressure switch integrated
- Atex certification (II 2GD or II 3GD)
- Inlet pressures up to 20 bar

Note
For installations where a more accurate and constant pressure is required, the unit should be installed as close as possible to the point of use.

Technical characteristics					
Size		**Size 1**	**Size 2**	**Size 3**	**Size 4**
Body and connections type		Technopolymer body, integrated technopolymer connections (T version) Technopolymer body, metal connections (N version)			/ /
		/	Aluminium body, integrated aluminium connections (P - L versions)		
IN / OUT connections	**T version**	G1/4”	G3/8”	G1/2”	not available
	N version	G1/8” - G1/4” - 1/4” NPT	G3/8” - G1/4” - 3/8” NPT	G3/8” - G1/2” - 1/2” NPT	
	P and L version	not available	G3/8” - 1/4” NPT	G1/2” - 1/2” NPT	G1” - 1” NPT
Assembly configuration		Stand alone Panel mounting With fixing bracket /			Panel mounted
Assembly positions		Indifferent			
Pressure range		0-2 bar 0-4 bar 0-8 bar 0-12 bar (P2 max 10 Bar in case of digital pressure switch selection)			
Regulation		Manul push and lock with pressure Manual lockable with accessories			
Pressure measurement		G1/8” - 1/8” NPT pressure gauge connection port (only for versions with IN / OUT NPT connections) Integrated pressure gauge (optional) Digital pressure switch (optional)			
Max. fittings torque IN / OUT connections		G1/8” metal: 15Nm G1/4” metal: 20Nm G1/4” technopolymer: 9Nm	G1/4” metal: 20Nm G3/8” metal: 25Nm G3/8” technopolymer: 16Nm	G3/8” metal: 25Nm G1/2” metal: 30Nm G1/2” technopolymer: 22Nm	G1”metal: 35Nm
Max.fitting torque pressure gauge connection port		G1/8” technopolymer: 4Nm G1/8” metal: 15Nm			

Operational characteristics				
Size	**Size 1**	**Size 2**	**Size 3**	**Size 4**
Maximum working pressure	13 bar			
		20 bar (only for P - L versions)		
Minimum working pressure	0,5 bar			
Working temperature	-5°C +50°C			
		-30°C +80°C (only for P version) -40°C +80°C (only for L version)		
Working temperature with digital pressure switch	0°C +50°C			

Weights				
Size	Size 1	Size 2	Size 3	Size 4
Technopolymer body version	150 g	310 g	390 g	/
Aluminium body version	/	400 g	560 g	1260 g

Materials
Exploded sectioned

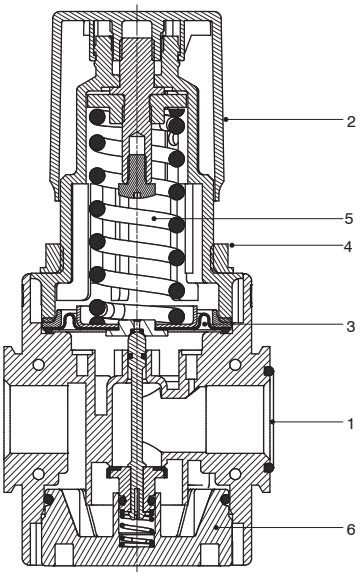

Regulator		
1	Body	Polyamide Die-cast aluminium
2	Adjusting knob	Polyamide
3	Diaphragm	NBR
4	Panel mounting locking ring	Polyamide
5	Adjusting spring	Steel
6	Rear end cap	Polyamide / Die-cast aluminium

Design

Size 1 - Size 2 - Size 3

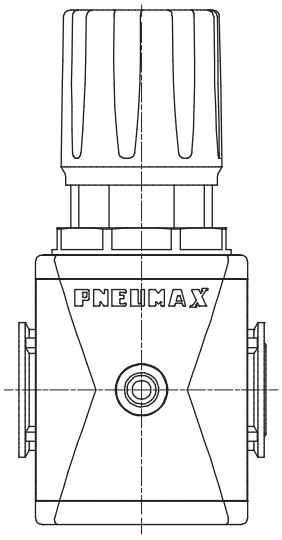

Size 4
All versions

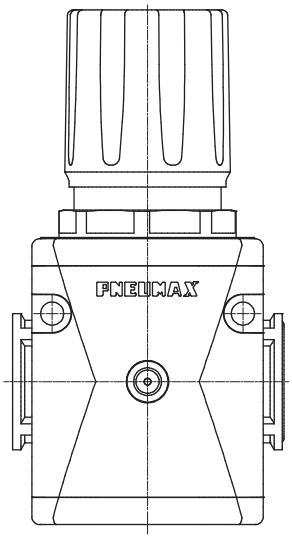

Overall dimensions and technical information are provided solely for informative purposes and may be modified without notice

Order codes

T	17	3B	R	M	D			

Version
N : Technopolymer body and metal inserts (not available for size 4)
T : Technopolymer body and thread (not available for size 4)
P : Aluminum body (not available for size 1)
L : Aluminum body, low temperature (not available for size 1)

Size and connections
1A : Size 1 - G1/8” only for N version
1B : Size 1 - G1/4” only for T - N versions
1C : Size 1 - 1/4” NPT only for N version
2A : Size 2 - G1/4” only for N version
2B : Size 2 - G3/8” for all versions
2C : Size 2 - 3/8” NPT only for N version - 1/4” NPT only for P - L versions
3A : Size 3 - G3/8” only for N version
3B : Size 3 - G1/2” for all versions
3C : Size 3 - 1/2” NPT only for N - P - L versions
4B : Size 4 - G1” only for P - L versions
4C : Size 4 - 1” NPT only for P - L versions

Pressure measurement options
: G1/8” - 1/8” NPT thread
M : Integrated pressure gauge
W : Integrated pressure gauge Right - Left
P : Digital pressure switch
Z : Digital pressure switch Right - Left

Pressure range
A : 0 - 2 bar
B : 0 - 4 bar
C : 0 - 8 bar
D : 0 - 12 bar

Relieving options
: With relieving
F : Controlled refiel and improved relieving (not available for size 4)
L : Without relieving
R : Improved relieving

Knob options
: Non-lockable version
K : Lockable version
U : Lockable version with universal key

Digital pressure switch options
A : Cable 150 mm + M8 PNP
B : Cable 150 mm + M8 NPN
C : Cable 2 m PNP
D : Cable 2 m NPN

Example : T173BRMD : Size 3 regulator G1/2” 0 - 12 bar

Characteristic curves

Size 1 - G1/4" 0-8 bar P1=7 bar

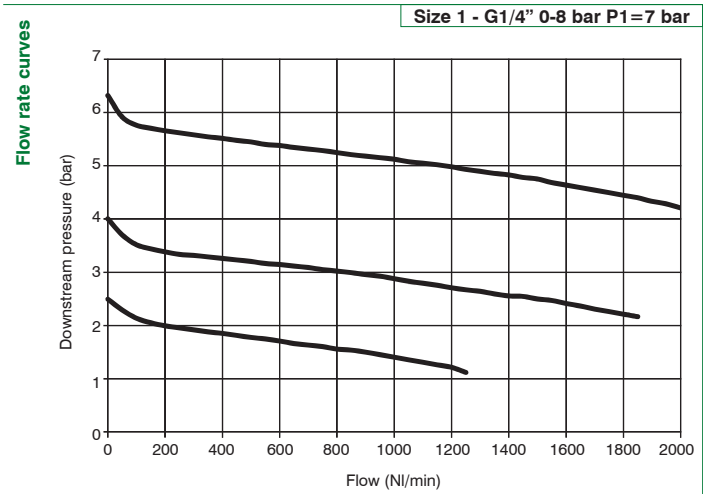

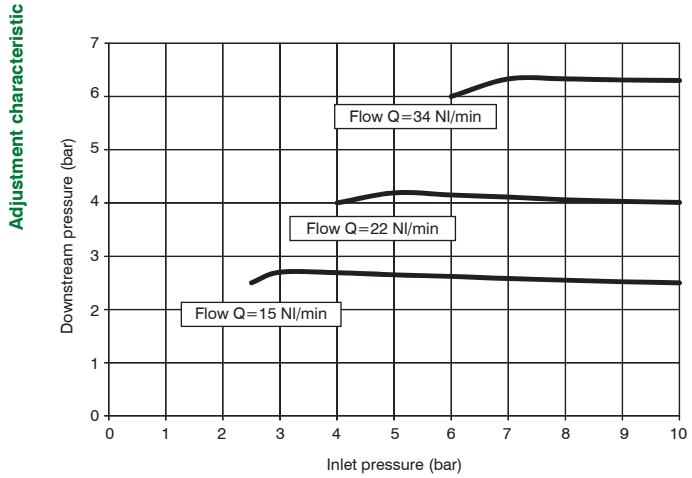

Size 2 - G3/8" 0-8 bar P1=7 bar

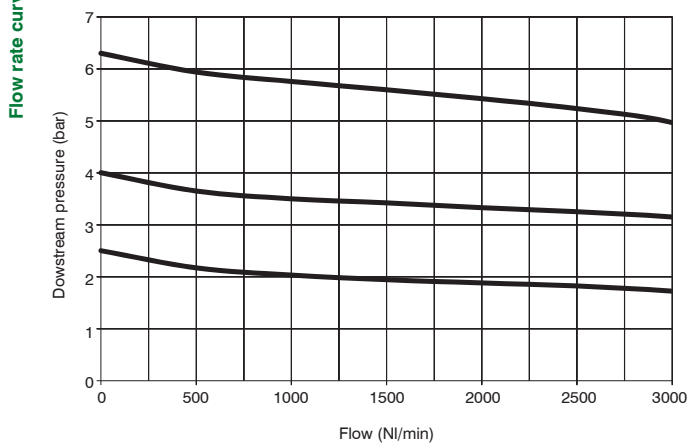

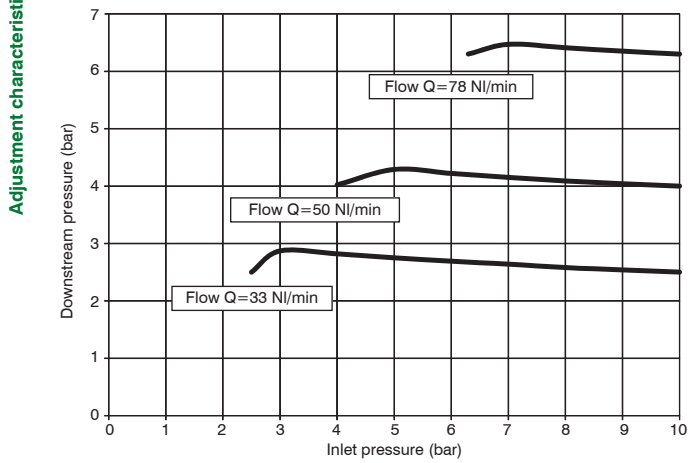

Size 3 - G1/2" 0-8 bar P1=7 bar

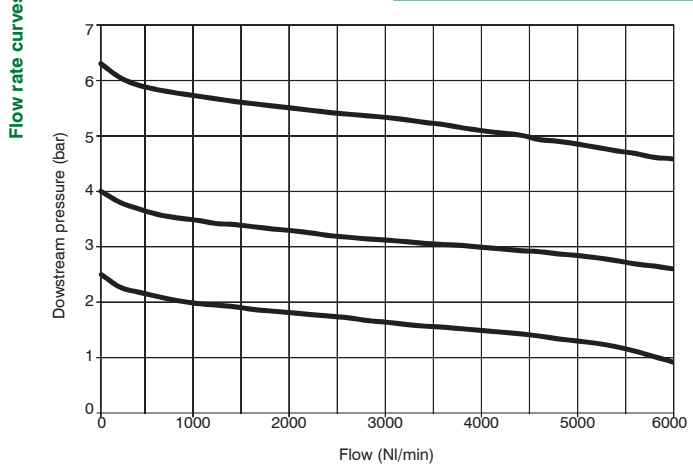

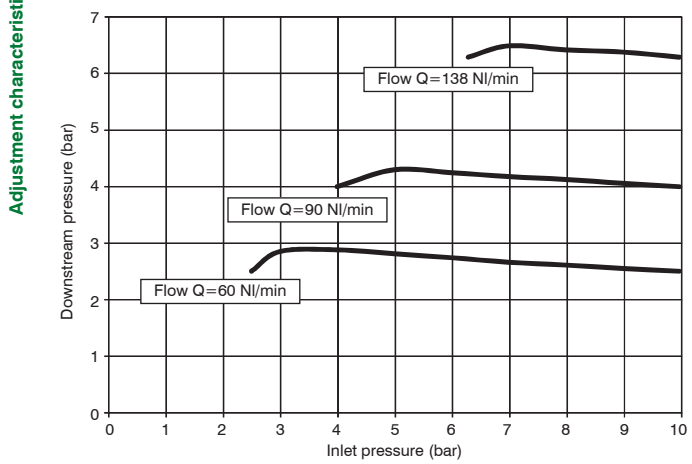

Size 4 - G1" 0-8 bar P1=10 bar

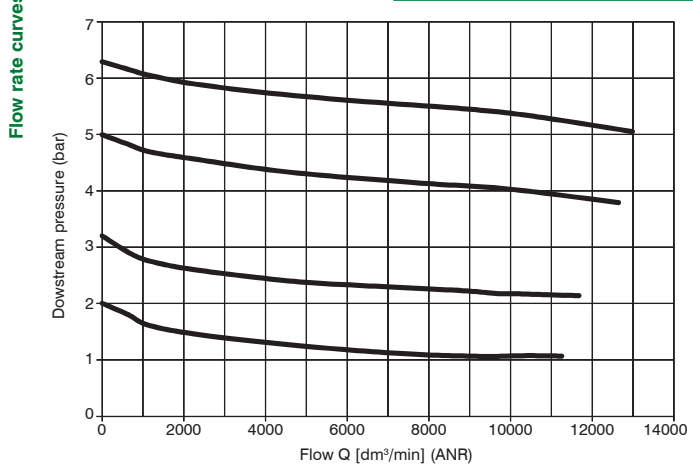

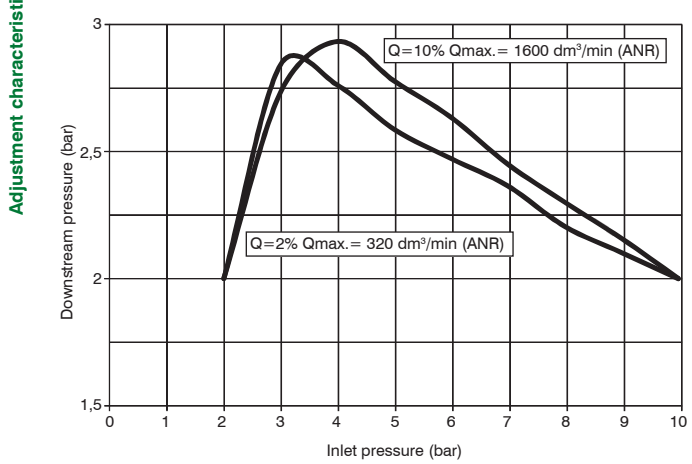

Overall dimensions and technical information are provided solely for informative purposes and may be modified without notice

Dimensions

Pressure gauge connection port version

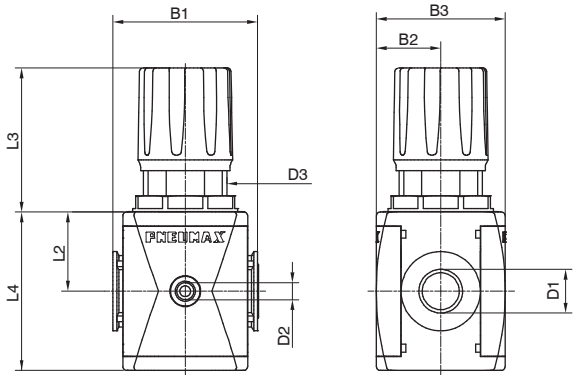

Fixing holes dimension detail
(only for size 4)

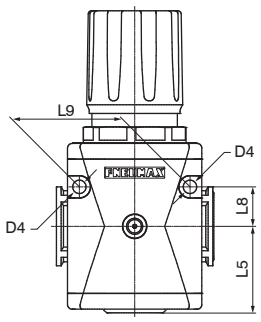

Model	B1	B2	B3	D1	D2	D3	D4	L2	L3	L4	L5	L8	L9
#171..	48	21	42	G1/8” G1/4” 1/4” NPT	G1/8” 1/8” NPT	M30x1,5	/	27,5	54	55	/	/	/
#172..	62	28,5	57	G1/4” G3/8” 1/4” NPT 3/8” NPT	G1/8” 1/8” NPT	M42x1,5	/	34	71,8	68	/	/	/
#173..	73	32,5	65	G3/8” G1/2” 1/2” NPT	G1/8” 1/8” NPT	M42x1,5	/	40	72,8	80	/	/	/
#174..	99	44	88	G1” 1” NPT	G1/8” 1/8” NPT	M54x1,5	8,5	52,5	87,5	105	54,5	25	70

Variable dimensions

Integrated pressure gauge version

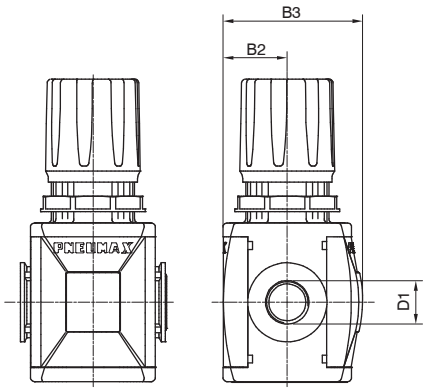

Integrated digital pressure switch version

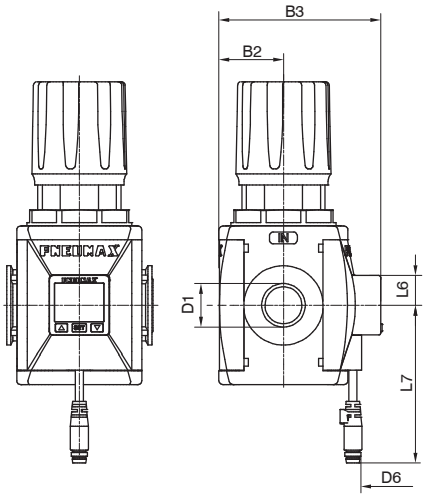

Model	B2	B3		D1	D6 - Type of digital pressure switch		L6	L7 - Type of digital pressure switch	
		With pressure gauge	With digital pressure switch		A - B	C - D		A - B	C - D
#171..	21	48,5	60	G1/8” G1/4” 1/4” NPT	M8 - 3 PIN	3 x 0,129 mm, Ø4 mm	15	150	2000
#172..	28,5	62,5	73,5	G1/4” G3/8” 1/4” NPT 3/8” NPT					
#173..	32,5	70,5	81,5	G3/8” G1/2” 1/2” NPT					
#174..	44	90,5	101,5	G1” 1” NPT					

Fixing bracket

T172 50

Size
171 : Size 1
T172 : Size 2 - Size 3

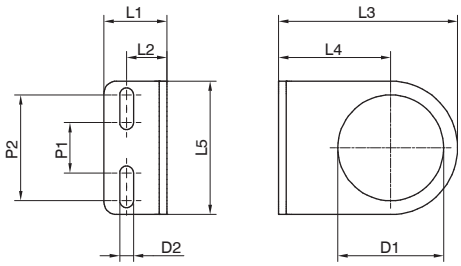

Model	L1	L2	L3	L4	L5	D1	D2	P1	P2
17150	20	13	50	30	40	30	5,5	20	30
T17250	25	16	71	44,5	53	42	5,5	20	42

Pressure gauge

17070 A C

Version
A : Dial Ø40
B : Dial Ø50

Scale
A : 0 - 4 bar
B : 0 - 6 bar
C : 0 - 12 bar

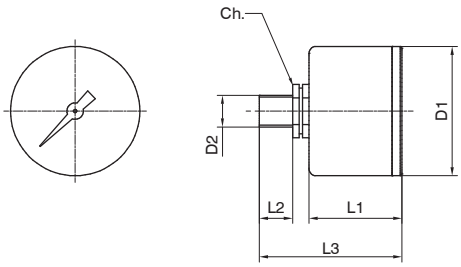

Model	L1	L2	L3	D1	D2	Ch
17070A..	26	10	44	41	Gc - 1/8”	14
17070B..	27	10	45	49	Gc - 1/8”	14

Overall dimensions and technical information are provided solely for informative purposes and may be modified without notice

Piloted pressure regulators (RP - RMP - RPP)

- Piston piloted pressure regulator
- Available with pressure gauge or digital pressure switch integrated
- Atex certification (II 2GD or II 3GD)
- Inlet pressures up to 20 bar

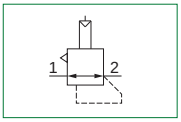

Note
Always regulate the rising pressure.

Technical characteristics	
Size	**Size 4**
Body and connections type	Aluminium body, integrated aluminium connections
IN / OUT connections	G1" - 1" NPT
Assembly configuration	Stand alone Panel mounted
Assembly positions	Indifferent
Pressure range	0,5 - 10 bar
Regulation	Pneumatic piloting
Pressure measurement	G1/8" - 1/8" NPT pressure gauge connection port (only for versions with IN / OUT NPT connections) Integrated pressure gauge (optional) Digital pressure switch (optional)
Max. fittings torque IN / OUT connections	G1"metal: 35Nm
Max.fitting torque pressure gauge connection port	G1/8"metal: 15Nm

Operational characteristics	
Size	**Size 4**
Maximum working pressure	20 bar
Minimum working pressure	0,5 bar
Pilot pressure range	0,5 - 10 bar
Working temperature	-30°C +80°C
Working temperature with digital pressure switch	0°C +50°C

Weights				
Size	Size 1	Size 2	Size 3	Size 4
Pneumatic pilot aluminum body version	/	/	/	1190 g

Materials
Exploded sectioned

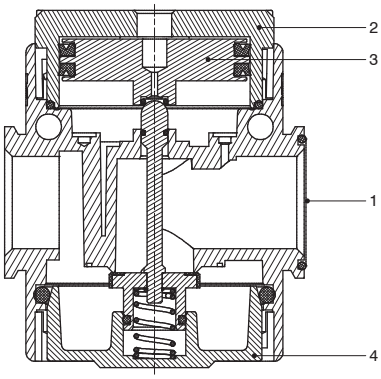

Piloted pressure regulator		
1	Body	Die-cast aluminium
2	Piloting operator	Aluminium
3	Piston	Aluminium
4	Rear end cap	Die-cast aluminium

Design

G1/8" pressure gauge connection port version

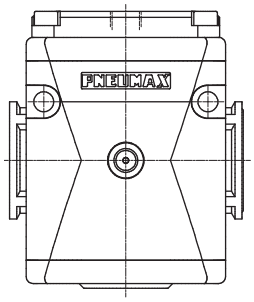

Integrated pressure gauge version

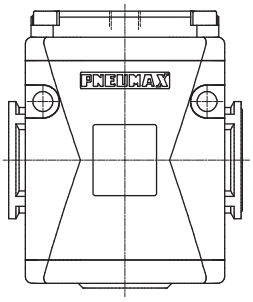

Integrated digital pressure switch version

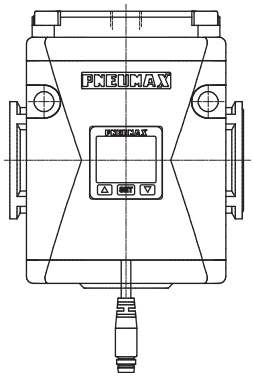

Order codes

P 17 4B R M P

Version
P : Aluminium body

Size and connections
4B : Size 4 - G1”
4C : Size 4 - 1” NPT

Pressure measurement options
: G1/8” - 1/8” NPT thread
M : Integrated pressure gauge
W : Integrated pressure gauge Right - Left
P : Digital pressure switch
Z : Digital pressure switch Right - Left

Digital pressure switch options
A : Cable 150 mm + M8 PNP
B : Cable 150 mm + M8 NPN
C : Cable 2 m PNP
D : Cable 2 m NPN

Example : P174BRMP : Size 4 piloted pressure regulator G1”, integrated pressure gauge

Overall dimensions and technical information are provided solely for informative purposes and may be modified without notice

Characteristic curves

Size 4 - G1" P1=10 bar

Flow rate curves

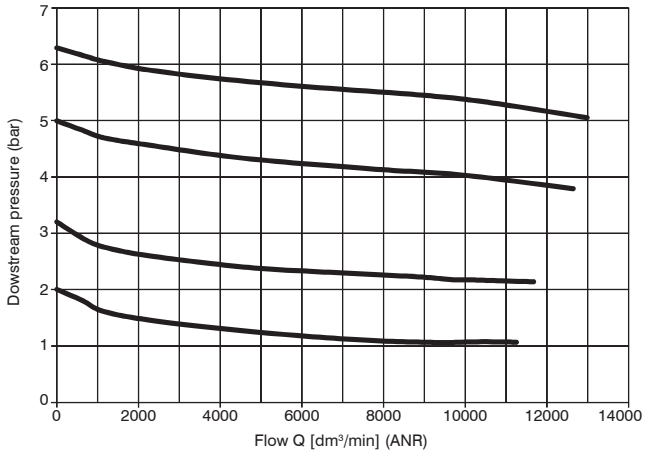

Adjustment characteristic

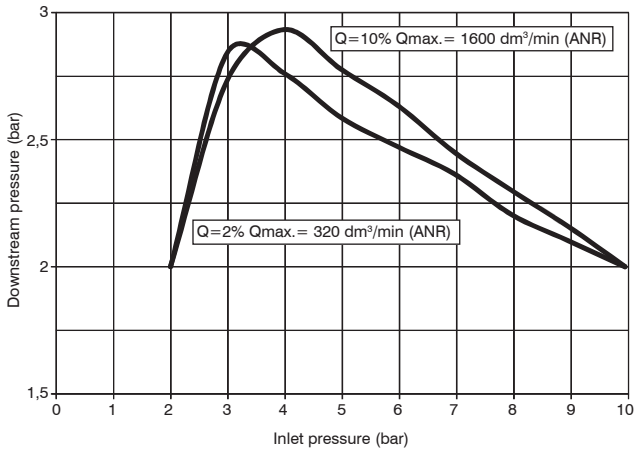

Piloting curves

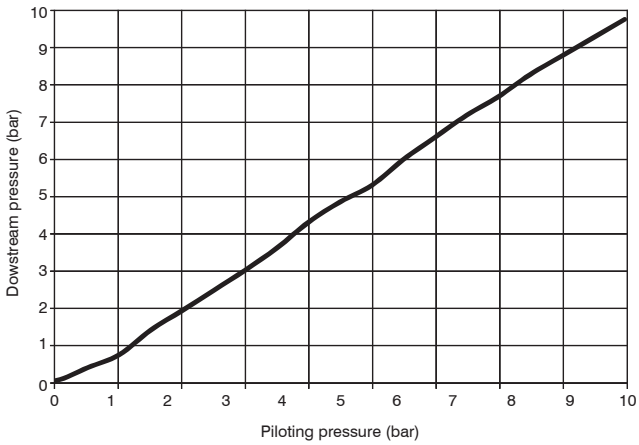

Dimensions

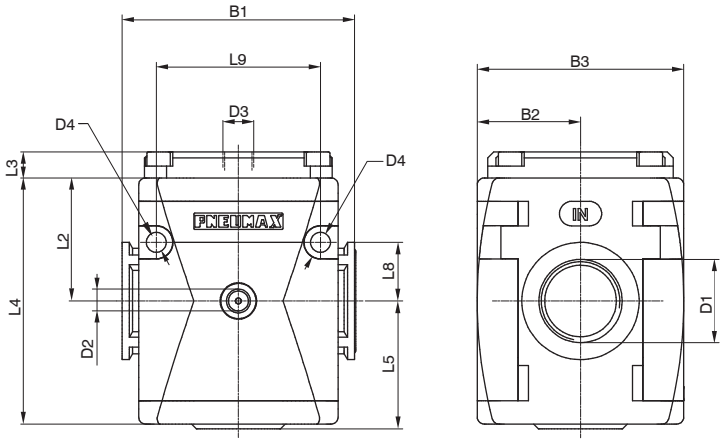

Model	B1	B2	B3	D1	D2	D3	D4	L2	L3	L4	L5	L8	L9
#174..	99	44	88	G1” 1” NPT	G1/8” 1/8” NPT	G1/4”	8,5	52,5	11	105	54,5	25	70

Variable dimensions

Integrated pressure gauge version

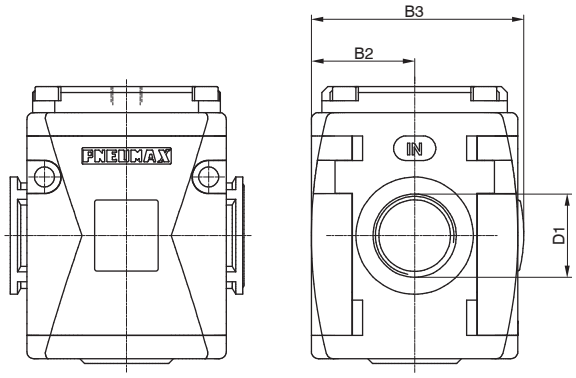

Integrated digital pressure switch version

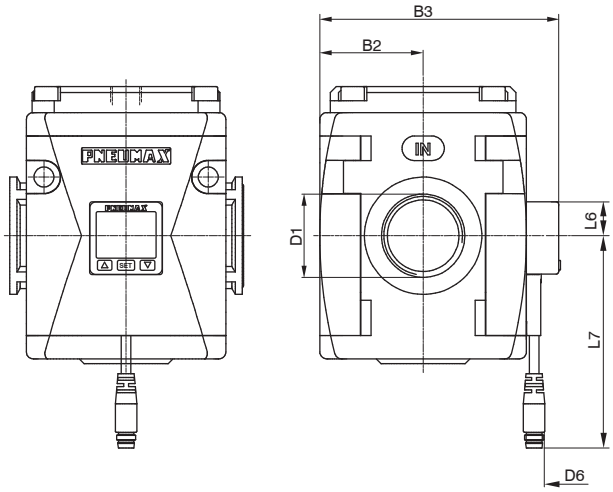

Model	B2	B3		D1	D6 - Type of digital pressure switch		L6	L7 - Type of digital pressure switch	
		With pressure gauge	With digital pressure switch		A - B	C - D		A - B	C - D
#174..	44	90,5	101,5	G1” 1” NPT	M8 - 3 PIN	3 x 0,129 mm, Ø4 mm	15	150	2000

Overall dimensions and technical information are provided solely for informative purposes and may be modified without notice

Digital pressure switch

- 3 color digital LCD display, easy readout
- 4 units of measurement for pressure indication
- Optional PNP or NPN digital output
- N.O. and N.C. output contact selection directly on the digital pressure switch
- Available with M8-3PIN connector or 3 wire cable length 2 m
- Available only in combination with a regulator

Output circuit wiring diagrams

PNP output

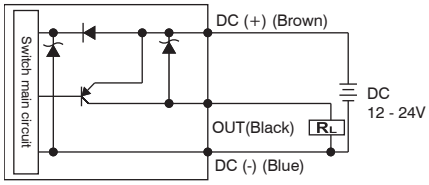

NPN output

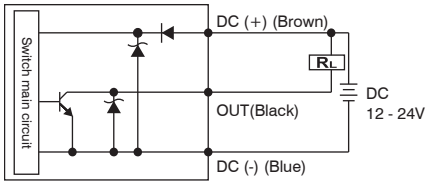

Digital pressure switch lay out

M8 connector pin layout

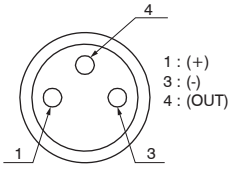

3 wires cable layout

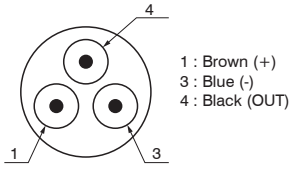

Cable ordering code

MCH1 : cable 3 wires l=2,5m with M8 connector
MCH2 : cable 3 wires l=5m with M8 connector
MCH3 : cable 3 wires l=10m with M8 connector

Connector

Technical characteristics	
Pressure range and display	0 - 10 bar
Max. inlet pressure	15 bar
Fluid	40μm filtered and dehumidified air
Display unit of measurement	MPa - kgf/cm² - bar - psi
Supply voltage	12 - 24 VDC
Current consumption	≤40mA (without load)
Digital output type	PNP - NPN
Type of contact output	Normally Open - Normally Closed
Max. load current	125 mA
Digital output activation mode	single threshold with fixed hysteresis - window with fixed hysteresis - window without hysteresis
Digital output activation time	0.05s - 0.25s - 0.5s - 1s - 2s - 3s (selections for chattering-proof options)
Display characteristics	Double 3 1/2 digit display Digital output status indication Three-pushbuttons touchpad
Indicator accuracy	≤±2% full scale value ± 1 digit
IP Rating	IP40
Working temperature	0°C +50°C
Cable section	3 x 0,129mm2, Ø4 mm, PVC

Pressure regulators for manifold (B - M)

- Diaphragm pressure regulator with relieving
- Available with 2 front outputs connections G1/8 “ or with 1 front output and integrated pressure gauge on the opposite side
- Low histeresis rolling diaphragm and balanced spool
- Available in four pressure ranges up to 12 bar
- Fitted with panel mounting locking ring
- Available with Integrated pressure gauge
- Air supply can be applied by both directions (Right or Left)
- Max. 6off pressure regulators in manifold configuration
- Atex certification (II 3GD)

Note
For installations where a more accurate and constant pressure is required, the unit should be installed as close as possible to the point of use.

Technical characteristics		
Size		**Size 1**
Body and connections type		Technopolymer body, integrated technopolymer connections (T version) Technopolymer body, metal connections (N version)
IN connections	**T version**	G1/4”
	N version	G1/8” - G1/4” - 1/4” NPT
OUT connections		G1/8”
Assembly configuration		Stand alone Panel mounting With fixing bracket
Assembly positions		Indifferent
Pressure range		0-2 bar 0-4 bar 0-8 bar 0-12 bar
Regulation		Manul push and lock with pressure Manual lockable with accessories
Pressure measurement		G1/8” pressure gauge connection port Integrated pressure gauge (optional)
Max. fittings torque IN / OUT connections		G1/8” metal: 15Nm G1/4” metal: 20Nm G1/4” technopolymer: 9Nm
Max.fitting torque pressure gauge connection port		G1/8” technopolymer: 4Nm G1/8” metal: 15Nm

Operational characteristics	
Size	**Size 1**
Maximum working pressure	13 bar
Minimum working pressure	0,5 bar
Working temperature	-5°C +50°C

Overall dimensions and technical information are provided solely for informative purposes and may be modified without notice

Weights	
Size	Size 1
Technopolymer body version	140 g

Materials
Exploded sectioned

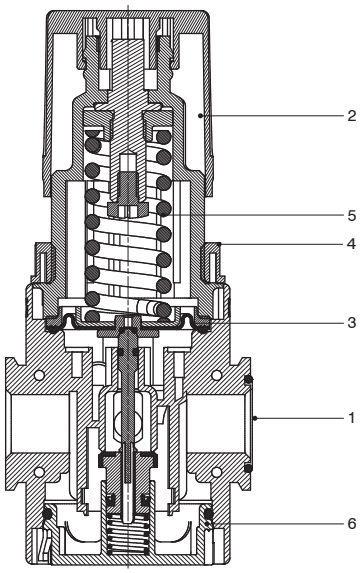

Pressure regulator for manifold		
1	Body	Polyamide Die-cast aluminium
2	Adjusting knob	Polyamide
3	Diaphragm	NBR
4	Panel mounting locking ring	Polyamide
5	Adjusting spring	Steel
6	Rear end cap	Polyamide / Die-cast aluminium

Design

Pressure gauge connection port version

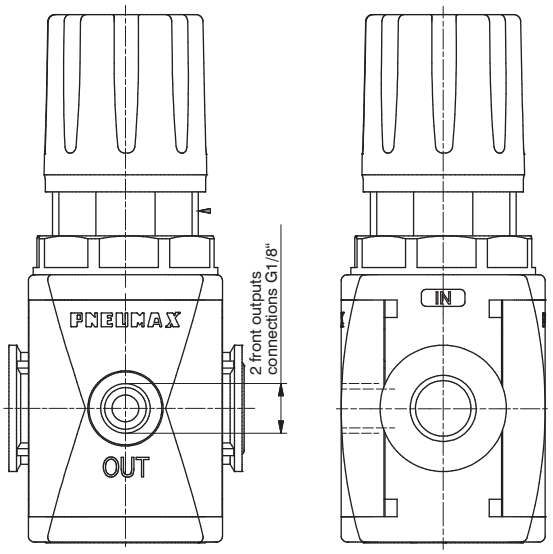

Integrated pressure gauge version

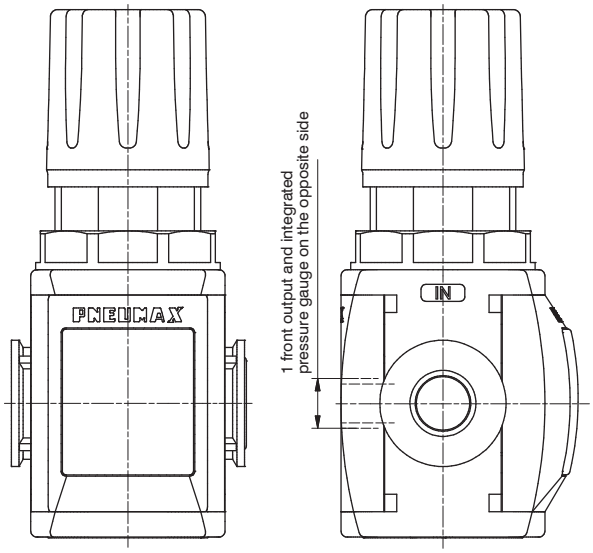

Order codes

T	17	1B	B	D		

Version
- **N** : Technopolymer body and metal inserts
- **T** : Technopolymer body and thread

Size and connections
- **1A** : Size 1 - G1/8”
- **1B** : Size 1 - G1/4”
- **1C** : Size 1 - 1/4” NPT only for N version

Pressure measurement options
- **B** : G1/8” - 1/8” NPT thread
- **M** : Integrated pressure gauge

Pressure range
- **A** : 0 - 2 bar
- **B** : 0 - 4 bar
- **C** : 0 - 8 bar
- **D** : 0 - 12 bar

Relieving options
- : With relieving
- **F** : Controlled refiel and improved relieving
- **L** : Without relieving
- **R** : Improved relieving

Knob options
- : Non-lockable version
- **K** : Lockable version
- **U** : Lockable version with universal key

Example : T171BBD : Size 1 pressure regulator for manifold G1/4”, 0 - 12 bar

Characteristic curves

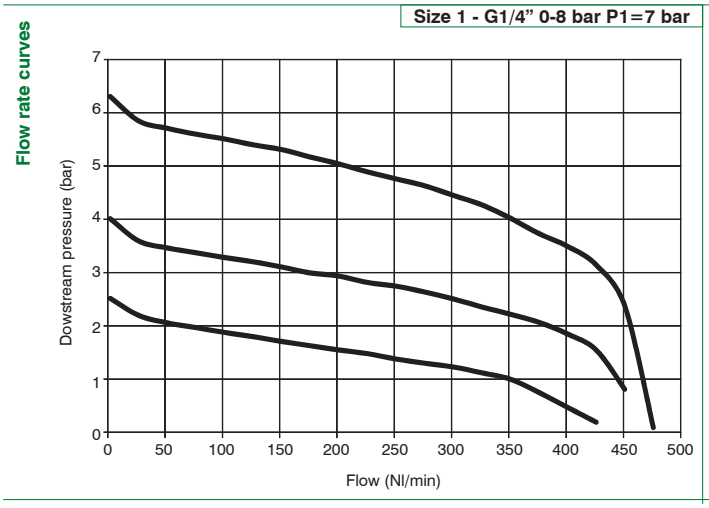

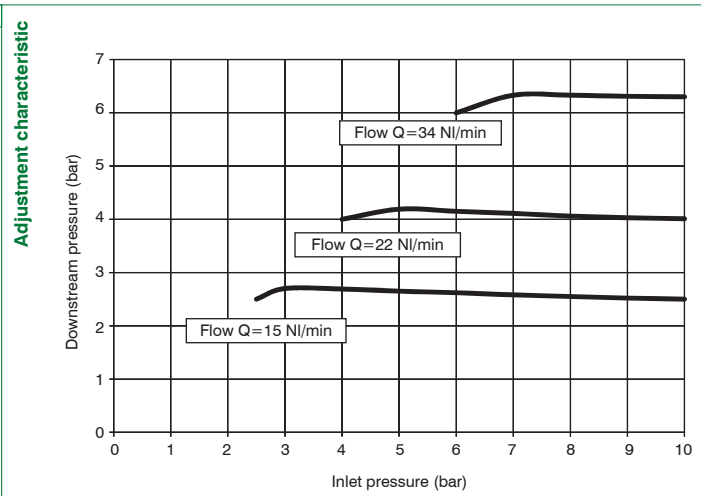

Overall dimensions and technical information are provided solely for informative purposes and may be modified without notice

Dimensions

Pressure gauge connection port version (B)

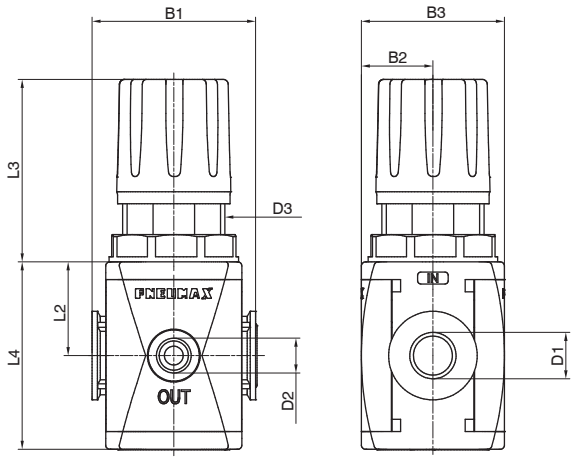

Integrated pressure gauge version (M)

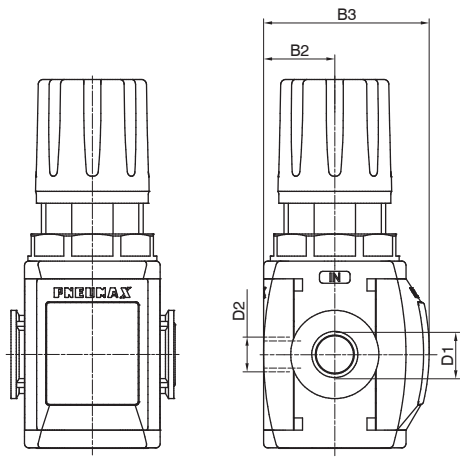

Model	B1	B2	B3		D1	D2	D3	L2	L3	L4
			B version	M version						
#171..	48	24	42	48,5	G1/4” G1/8” 1/4” NPT	G1/8”	M30x1,5	27,5	54	55

Manifold pressure regulators

- Manifold pressure regulators
- Available in four pressure ranges up to 12 bar
- Inlet pressure common for the whole manifold of pressure regulator
- A maximum of 6 pressure regulators can be mounted
- Atex certification (II 3GD)
- Assembly with X or Y flanges

Technical characteristics		
Size		Size 1
Body and connections type		Technopolymer body, integrated technopolymer connections (T version) Technopolymer body, metal connections (N version)
IN connections	T version	G1/4”
	N version	G1/8” - G1/4” - 1/4” NPT
OUT connections		G1/8”
Assembly configuration		Stand alone Panel mounting With fixing bracket
Assembly positions		Indifferent
Pressure range		0-2 bar 0-4 bar 0-8 bar 0-12 bar
Regulation		Manul push and lock with pressure Manual lockable with accessories
Pressure measurement		G1/8” pressure gauge connection port Integrated pressure gauge (optional)
Max. fittings torque IN / OUT connections		G1/8” metal: 15Nm G1/4” metal: 20Nm G1/4” technopolymer: 9Nm
Max.fitting torque pressure gauge connection port		G1/8” technopolymer: 4Nm G1/8” metal: 15Nm

Operational characteristics	
Size	Size 1
Maximum working pressure	13 bar
Minimum working pressure	0,5 bar
Working temperature	-5°C +50°C

Overall dimensions and technical information are provided solely for informative purposes and may be modified without notice

Order codes

G | T | 17 | 1B | M | 6 | C | C | C | C | C | C

Version
N : Technopolymer body and metal inserts
T : Technopolymer body and thread

Size and connections
1A : Size 1 - G1/8”
1B : Size 1 - G1/4”
1C : Size 1 - 1/4” NPT only for N version

Pressure measurement options
B : G1/8” thread with flanges X
M : Integrated pressure gauge with flanges X
P : G1/8” thread with extended flanges Y
R : Integrated pressure gauge with extended flanges Y
W : G1/8” thread with flanges Y
Z : Integrated pressure gauge with flanges Y

Number of regulators
2 : n. 2 regulators
3 : n. 3 regulators
4 : n. 4 regulators
5 : n. 5 regulators
6 : n. 6 regulators

Pressure range
A : 0 - 2 bar
B : 0 - 4 bar
C : 0 - 8 bar
D : 0 - 12 bar

Pressure range
A : 0 - 2 bar
B : 0 - 4 bar
C : 0 - 8 bar
D : 0 - 12 bar

Pressure range
A : 0 - 2 bar
B : 0 - 4 bar
C : 0 - 8 bar
D : 0 - 12 bar

Pressure range
A : 0 - 2 bar
B : 0 - 4 bar
C : 0 - 8 bar
D : 0 - 12 bar

Pressure range
A : 0 - 2 bar
B : 0 - 4 bar
C : 0 - 8 bar
D : 0 - 12 bar

Pressure range
A : 0 - 2 bar
B : 0 - 4 bar
C : 0 - 8 bar
D : 0 - 12 bar

Example : T171BM6CCCCCC : Size 1 manifold pressure regulators G1/4”, 0 - 8 bar, integrated pressure gauge

Dimensions

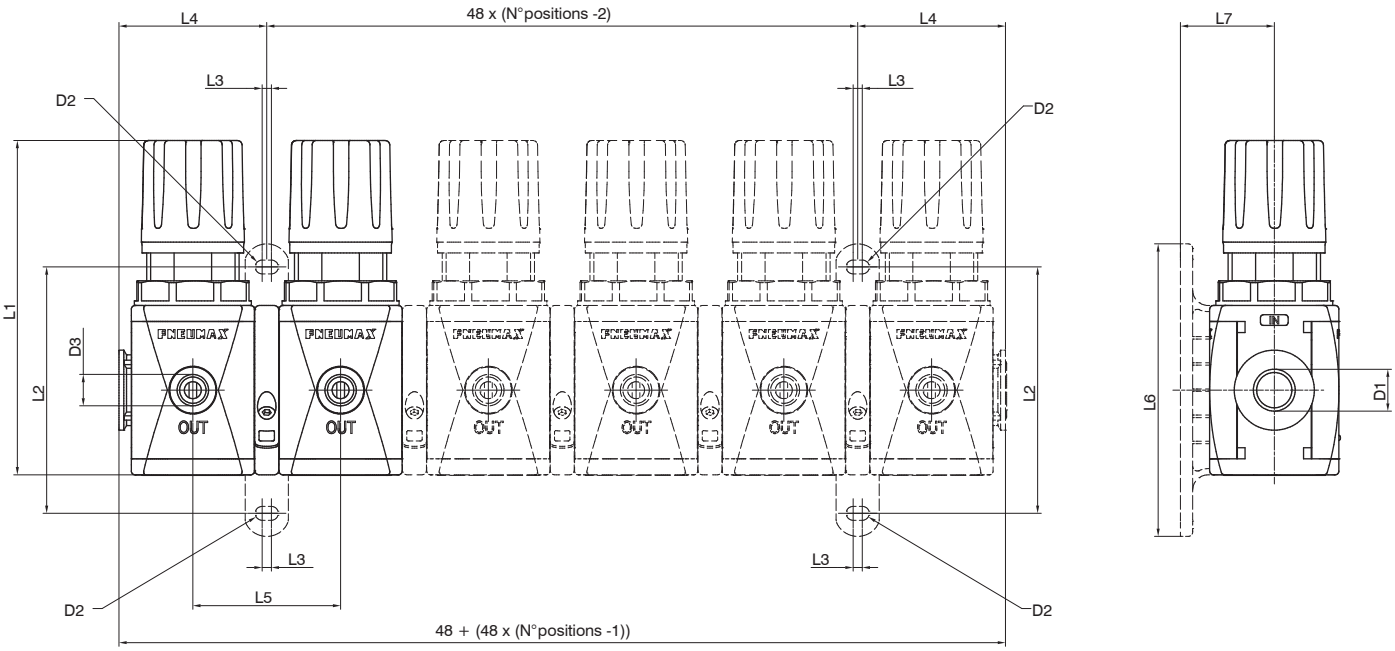

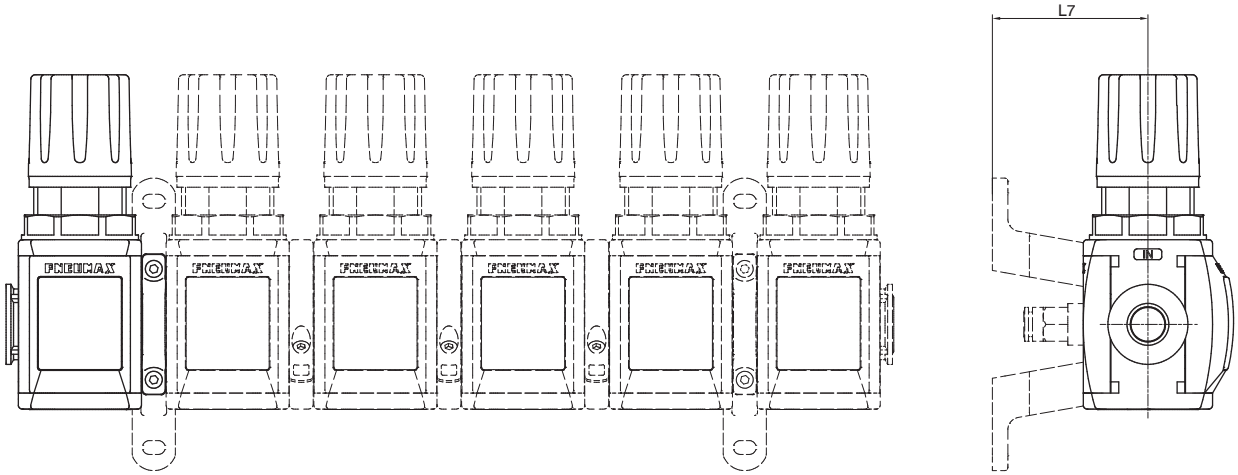

Model	D1	D2	D3	L1	L2	L3	L4	L5	L6	L7
#171..with flanges X	G1/4” G1/8” 1/4” NPT	/	G1/8”	109	/	/	48	48	/	/
#171..with flanges Y		Ø4,5			80	3			105	30,5
#171..with extended flanges Y										50,5

Overall dimensions and technical information are provided solely for informative purposes and may be modified without notice

Manifold mounting flanges

Flange Y

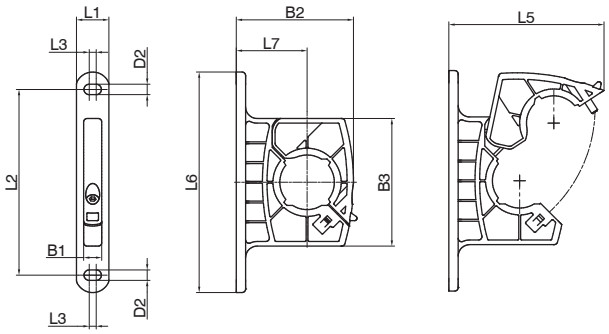

Extended flange Y

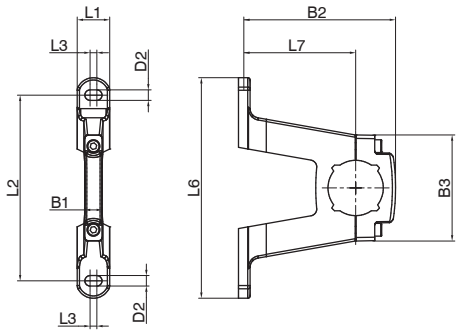

Flange X

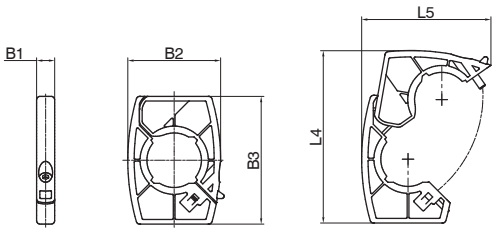

Model	B1	B2	B3	D2	L1	L2	L3	L4	L5	L6	L7
T171Y	7,8	50,5	55	Ø4,5	14	80	3	/	66	95	30,5
N171YP		67,7	45,7	Ø4,5	14	80	3	/	66		50,5
T171X		40	55	/	/	/	/	74,5	55,5	/	/

Fixing bracket

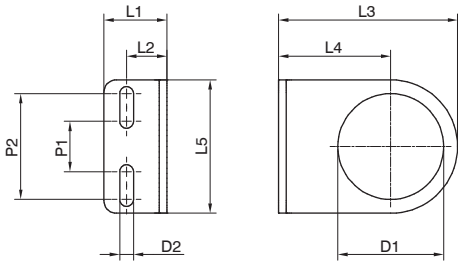

Model	L1	L2	L3	L4	L5	D1	D2	P1	P2
17150	20	13	50	30	40	30	5,5	20	30

Pressure gauge

17070 [A] [C]

Version
A : Dial Ø40
B : Dial Ø50

Scale
A : 0 - 4 bar
B : 0 - 6 bar
C : 0 - 12 bar

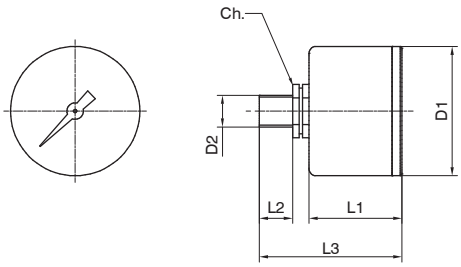

Model	L1	L2	L3	D1	D2	Ch
17070A..	26	10	44	41	Gc - 1/8”	14
17070B..	27	10	45	49	Gc - 1/8”	14

Overall dimensions and technical information are provided solely for informative purposes and may be modified without notice

Lubricators (L)

- Oil mist lubricator
- Available in 4 sizes with flow rates up to 16000 Nl/min and connections from 1/8” to 1”
- Bowl assembly via bayonet type quick coupling mechanism with safety button
- Variable orifice size in function of the flow rate
- Oil quantity regulation mechanism and oil quantity visualization dome made of polycarbonate (PC)
- Oil refill plug
- Lubricator oil recharge with pressurized system
- Available with low level electrical sensor NO and NC
- Atex certification (II 2GD or II 3GD)

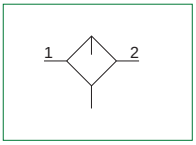

Technical characteristics					
Size		Size 1	Size 2	Size 3	Size 4
Body and connections type		Technopolymer body, integrated technopolymer connections (T version) Technopolymer body, metal connections (N version)			/ /
		/	Aluminium body, integrated aluminium connections (P version)		
Protection and bowl type		Technopolymer protection - PC bowl Technopolymer protection - PA bowl			
			Metal protection - PC bowl Metal protection - PA bowl		
IN / OUT connections	T version	G1/4”	G3/8”	G1/2”	non disponibile
	N version	G1/8” - G1/4” - 1/4” NPT	G3/8” - G1/4” - 3/8” NPT	G3/8” - G1/2” - 1/2” NPT	
	P version	not available	G3/8”	G1/2”	G1”
Assembly configuration		Stand alone			
		/			Panel mounted
Assembly positions		Vertical ±5°			
Bowl capacity		36 cm³	70 cm³	136 cm³	360 cm³
Lubrication type		Oil mist lubrication			
Oil level regulation		Manual, complete with visual indicator			
Max. fittings torque IN / OUT connections		G1/8” metal: 15Nm G1/4” metal: 20Nm G1/4” technopolymer: 9Nm	G1/4” metal: 20Nm G3/8” metal: 25Nm G3/8” technopolymer: 16Nm	G3/8” metal: 25Nm G1/2” metal: 30Nm G1/2” technopolymer: 22Nm	G1”metal: 35Nm

Operational characteristics				
Size	Size 1	Size 2	Size 3	Size 4
Maximum working pressure	13 bar			
Minimum working pressure	0,5 bar			
Min. operational flow at 6,3 bar	40 Nl/min	70 Nl/min	100 Nl/min	100 Nl/min
Indicative oil drop rate	1 drope every 300/600 Nl/min			
Oil type	FD22 - HG32			
Working temperature	-5°C +50°C			

Weights				
Size	**Size 1**	**Size 2**	**Size 3**	**Size 4**
Fully technopolymer version	121 g	215 g	347 g	/
Technopolymer body version, aluminium bowl protection and technopolymer bowl	/	245 g	383 g	/
Aluminium body version, technopolymer protection and bowl	/	315 g	477 g	1032 g
Aluminium body version, aluminium bowl protection and technopolymer bowl	/	345 g	513 g	1077 g

Materials
Exploded sectioned

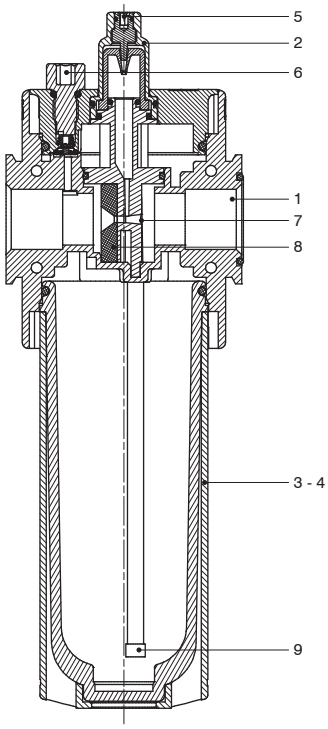

Lubricator		
1	Body	Polyamide Die-cast aluminium
2	Visual indicator	Polyamide
3	Technopolymer bowl	Polycarbonate Polyamide
4	Bowl protection	Polyamide - Die-cast aluminium
5	Oil regulation needle	Brass
6	Recharge plug	Acetal resin
7	Diaphragm support	Acetal resin
8	Diaphragm	NBR
9	Filter	Sintered brass

Design

Size 1 - Size 2 - Size 3
Technopolymer protection

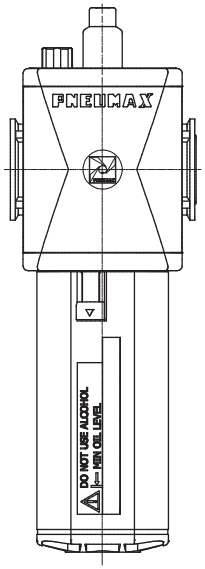

Size 1 - Size 2 - Size 3
Metal protection

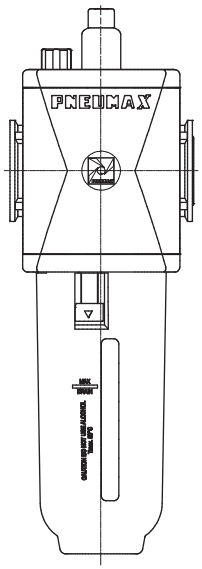

Size 4
All versions

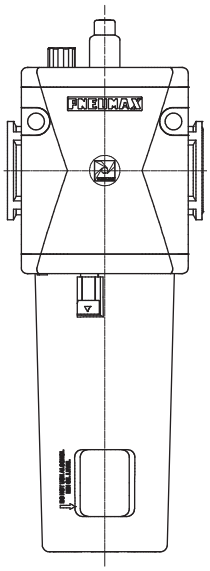

Overall dimensions and technical information are provided solely for informative purposes and may be modified without notice

Order codes

T 17 3B L A N

Version
N : Technopolymer body and metal inserts (not available for size 4)
T : Technopolymer body and thread (not available for size 4)
P : Aluminium body (not available for size 1)

Size and connections
1A : Size 1 - G1/8” only for N version
1B : Size 1 - G1/4” only for T - N versions
1C : Size 1 - 1/4” NPT only for N version
2A : Size 2 - G1/4” only for N version
2B : Size 2 - G3/8” for all versions
2C : Size 2 - 3/8” NPT only for N version
3A : Size 3 - G3/8” only for N version
3B : Size 3 - G1/2” for all versions
3C : Size 3 - 1/2” NPT only for N version
4B : Size 4 - G1” only for P version

Options
: No electric level sensor device
A : Electrical minimum level sensor NO (not available for size 1)
C : Electrical minimum level sensor NC (not available for size 1)

Bowl options
: Technopolymer protection - PC bowl
N : Technopolymer protection - PA bowl
P : Metal protection - PC bowl (not available for size 1)
R : Metal protection - PA bowl (not available for size 1)

Example : T173BLAN : Size 3 lubricator G1/2”, normally open low level electrical sensor, PA bowl with technopolymer protection

Characteristic curves

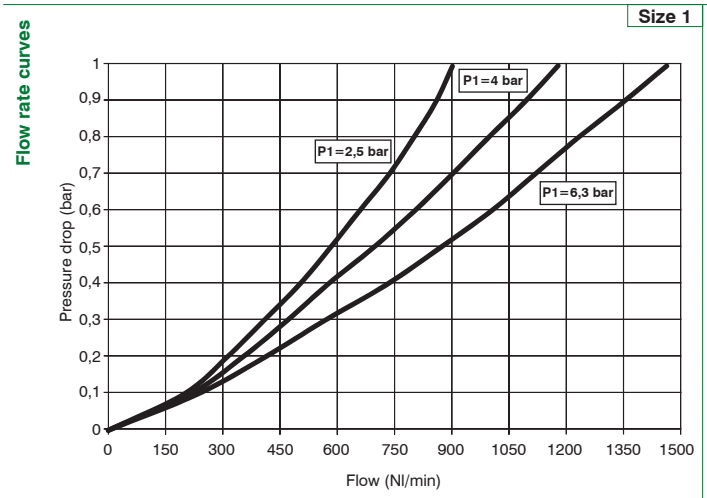

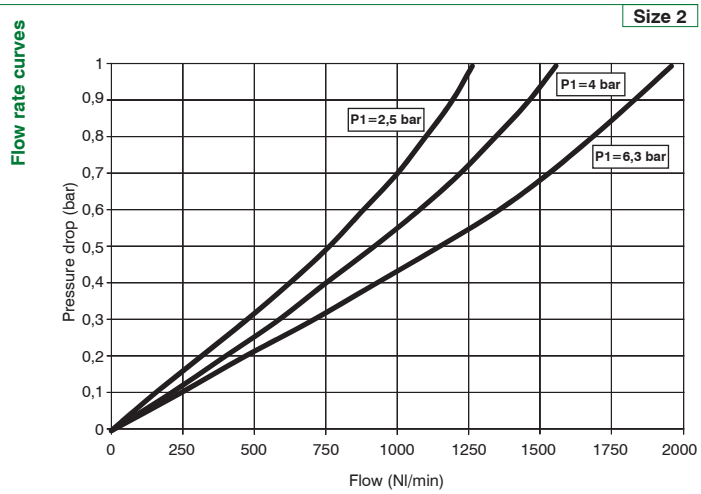

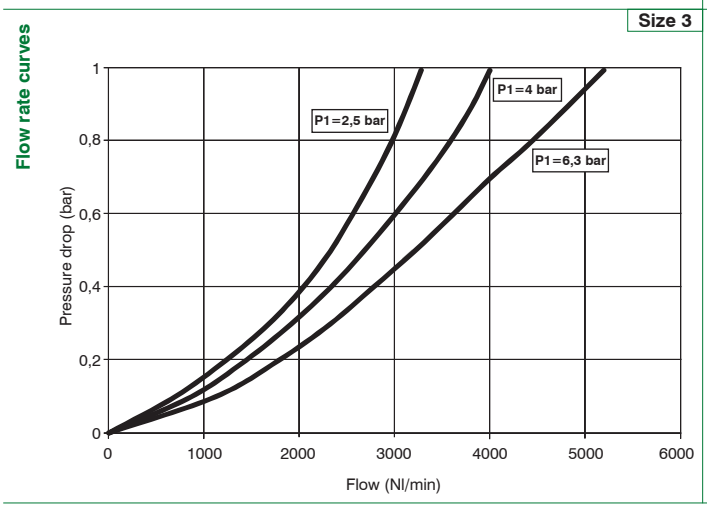

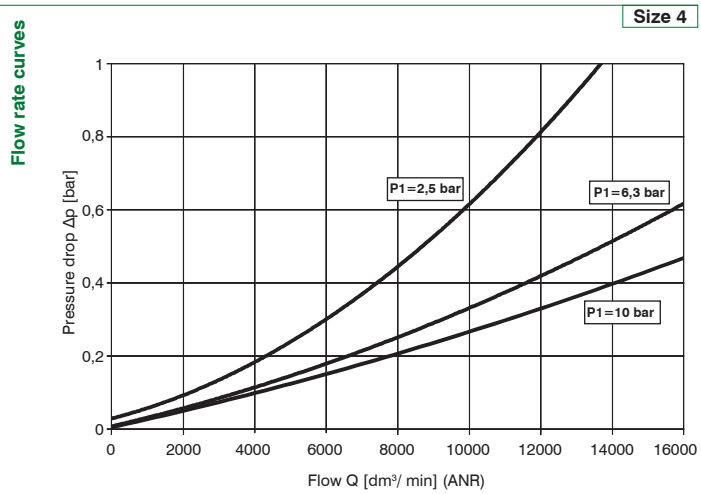

Dimensions

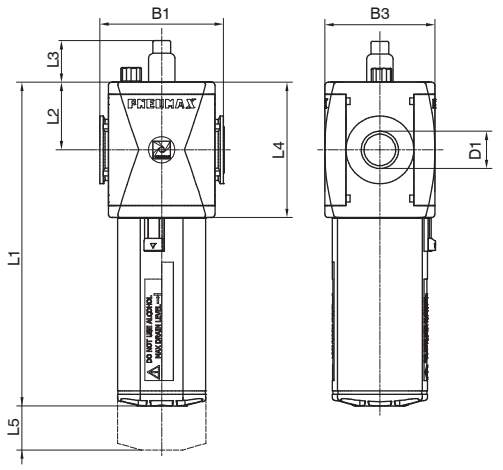

Fixing holes dimension detail
(only for size 4)

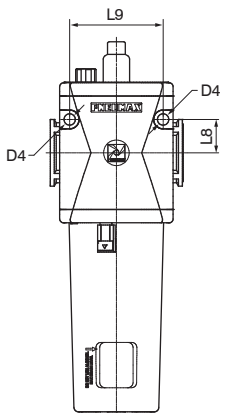

Model	B1	B3	D1	D4	L1	L2	L3	L4	L5	L8	L9
#171..	48	42	G1/8” G1/4” 1/4” NPT	/	131	27,5	24	55	80	/	/
#172..	62	57	G1/4” G3/8” 3/8” NPT	/	152.7	34	24	68	90	/	/
#173..	73	65	G3/8” G1/2” 1/2” NPT	/	191.4	40	24	80	120	/	/
#174..	99	88	G1”	8,5	247	52,5	24	105	145	25	70

Overall dimensions and technical information are provided solely for informative purposes and may be modified without notice

Variable dimensions

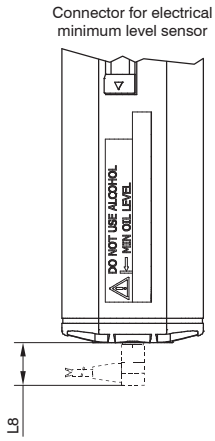

Model	L8	Connectors for electrical connection
Electrical minimum level sensor NO	16	C1 - C2 - C3 (see sensors section of general catalog)
Electrical minimum level sensor NC		

Accessories

Electrical connection details

C1 : connector with 2,5 m cable 2 wires (PVC Ø3,5 mm 2x0,25mm²)

C2 : connector with 5 m cable 2 wires (PVC Ø3,5 mm 2x0,25mm²)

C3 : connector with 10 m cable 2 wires (PVC Ø3,5 mm 2x0,25mm²)

For sensors SNAP 2 wires
connection 2 wires, 2 PIN

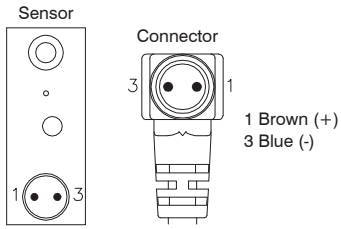

SNAP code connectors	
C1	Ø 3,5 mm
C2	PVC
C3	2x 0,25 mm²

Shut off valves (VL - VP - VE)

- 3/2 N.C. shut off valve
- Suitable for system downstream pneumatic feeding or exhaust
- Manual, pneumatic and electropneumatic operation available
- Up to 3off manual operation lockable device available (closed position)
- Atex certification (II 2GD or II 3GD)

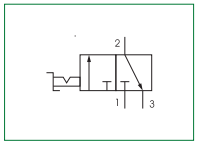

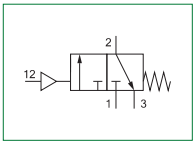

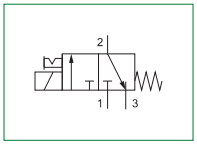

Technical characteristics					
Size		Size 1	Size 2	Size 3	Size 4
Body and connections type		Technopolymer body, integrated technopolymer connections (T version) Technopolymer body, metal connections (N version)			/ /
		/	Aluminium body, integrated aluminium connections (P version)		
Operated type		Manual Pneumatic Electropneumatic			
IN / OUT connections	T version	G1/4”	G3/8”	G1/2”	not available
	N version	G1/8” - G1/4” - 1/4” NPT	G3/8” - G1/4” - 3/8” NPT	G3/8” - G1/2” - 1/2” NPT	
	P and L version	not available	G3/8”	G1/2”	G1”
Pilot connection		G1/8”			
Exhaust connection		G1/4”	G3/8”		G1/2”
Assembly configuration		Stand alone			
		/			Panel mounted
Assembly positions		Indifferent			
Max. fittings torque IN / OUT connections		G1/8” metal: 15Nm G1/4” metal: 20Nm G1/4” technopolymer: 9Nm	G1/4” metal: 20Nm G3/8” metal: 25Nm G3/8” technopolymer: 16Nm	G3/8” metal: 25Nm G1/2” metal: 30Nm G1/2” technopolymer: 22Nm	G1/2”metal: 30Nm G1”metal: 35Nm

Operational characteristics								
Size	Size 1	Size 2	Size 3	Size 4	Size 1	Size 2	Size 3	Size 4
Operator	Manual				Pneumatic / Solenoid			
Maximum working pressure	13 bar			10 bar	10 bar			
Minimum working pressure	0,5 bar				2,5 bar			
Working temperature	-5°C +50°C				-5°C +50°C			
		-30°C +80°C (only for P version) -40°C +80°C (only for L version)				-30°C +80°C (only with metal body and pneumatic version) -40°C +80°C (only with metal body and pneumatic version)		
Nominal flow rate at 6 bar with Δp=1 (from 1 to 2)	1400 Nl/min	2200 Nl/min	3600 Nl/min	15000 Nl/min	1400 Nl/min	2200 Nl/min	3600 Nl/min	15000 Nl/min
Exhaust nominal flow rate at 6 bar with Δp=1 (from 2 to 3)	550 Nl/min	1500 Nl/min		3600 Nl/min	550 Nl/min	1500 Nl/min		3600 Nl/min
Un-conveyed exhaust nominal flow rate (from 2 to 3)	1000 Nl/min	2500 Nl/min		5000 Nl/min	1000 Nl/min	2500 Nl/min		5000 Nl/min

Overall dimensions and technical information are provided solely for informative purposes and may be modified without notice

Weights								
Size	Size 1				Size 2			
Operator	Manual	Pneumatic	Solenoid M2 actuator	Solenoid 15mm coil	Manual	Pneumatic	Solenoid M2 actuator	Solenoid 15mm coil
Technopolymer body version	110 g	99 g	140 g	140 g	190 g	181 g	210 g	216 g
Aluminium body version	/	/	/	/	270 g	265 g	298 g	301 g

Size	Size 3				Size 4			
Operator	Manual	Pneumatic	Solenoid M2 actuator	Solenoid 15mm coil	Manual	Pneumatic	Solenoid M2 actuator	Solenoid 15mm coil
Technopolymer body version	250 g	270 g	310 g	310 g	/	/	/	/
Aluminium body version	400 g	398 g	429 g	432 g	1100 g	1135 g	1170 g	1180 g

Materials
Exploded sectioned

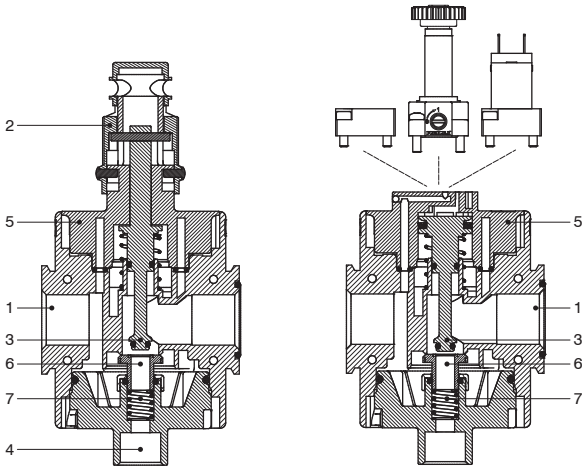

Shut off valve		
1	Body	Polyamide Die-cast aluminium
2	Manual override	Polyamide
3	Drive pin Piston	Aluminium
4	Exhaust plug	Polyamide
5	Central support	Polyamide
6	Spool	Brass + NBR
7	Repositioning spring	Steel

Design

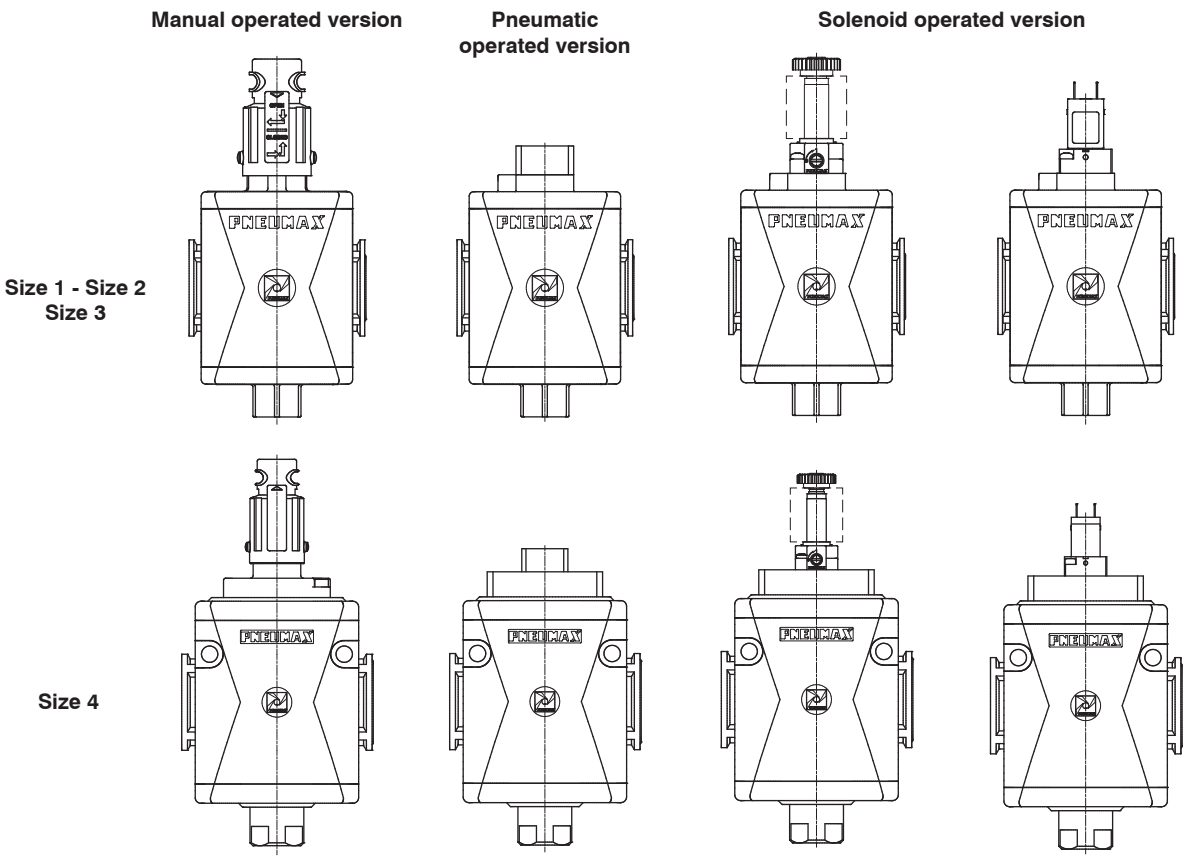

Order codes

T 17 3B V E A5

Version
N : Technopolymer body and metal inserts (not available for size 4)
T : Technopolymer body and thread (not available for size 4)
P : Aluminum body (not available for size 1)
L : Aluminium body, low temperature (not available for solenoid version)

Size and connections
1A : Size 1 - G1/8” only for N version
1B : Size 1 - G1/4” only for T - N versions
1C : Size 1 - 1/4” NPT only for N version
2A : Size 2 - G1/4” only for N version
2B : Size 2 - G3/8” for all versions
2C : Size 2 - 3/8” NPT only for N version
3A : Size 3 - G3/8” only for N version
3B : Size 3 - G1/2” for all versions
3C : Size 3 - 1/2” NPT only for N version
4B : Size 4 - G1” only for P - L versions

Operator
L : Manual
P : Pneumatic
E : Solenoid

Coil options
15 mm coil
A4 : 12 V DC
A5 : 24 V DC
A6 : 24 V AC (50-60 Hz)
A7 : 110 V AC (50-60 Hz)
A8 : 230 V AC (50-60 Hz)
A9 : 24 V DC (1 Watt)
22 mm coil
B2 : Mechanical M2, without coil
B4 : 12 V DC
B5 : 24 V DC
B6 : 24 V AC (50-60 Hz)
B7 : 110 V AC (50-60 Hz)
B8 : 230 V AC (50-60 Hz)
B9 : 24 V DC (2 Watt) (Atex certification not available)
30 mm coil
C5 : 24 V DC
C6 : 24 V AC (50-60 Hz)
C7 : 110 V AC (50-60 Hz)
C8 : 230 V AC (50-60 Hz)
C9 : 24 V DC (2 Watt) (Atex certification not available)

Example : T173BVEA5 : Size 3 electric shut off valve G1/2”, 15 mm coil, 24VDC

Overall dimensions and technical information are provided solely for informative purposes and may be modified without notice

Dimensions

Manual operated version

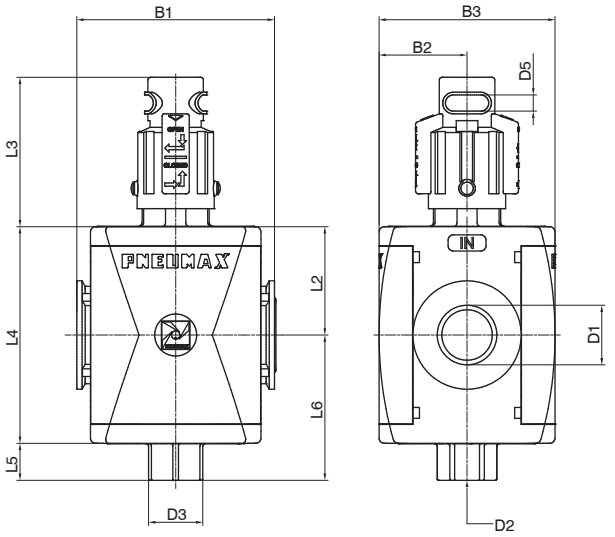

Solenoid operated version (15 mm coil)

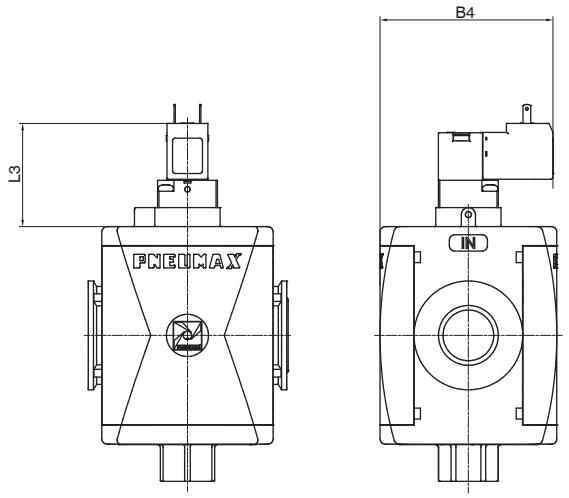

Solenoid operated version
(22 / 30 mm coil)

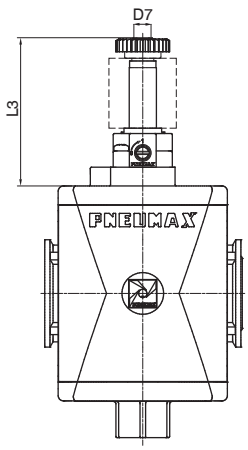

Pneumatic operated version

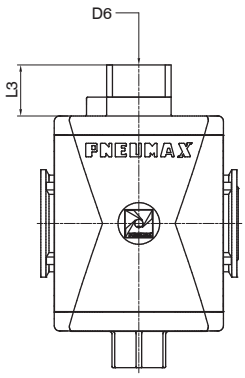

Fixing holes dimension detail
(only for size 4)

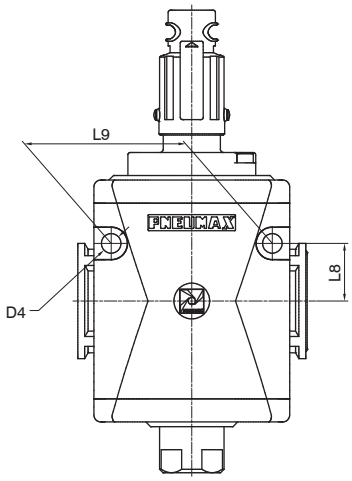

Model	B1	B2	B3	B4	D1	D2	D3	D4	D5	D6	D7	L2	L3				L4	L5	L6	L8	L9
													Manual	Pneumatic	Solenoid coil 22 or 30mm	Solenoid 15mm coil					
#171..	48	21	42	52	G1/8” G1/4” 1/4” NPT	G1/4”	Ch.17	/	6	G1/8”	M5	27,5	55	19	57	37,5	55	11	38,5	/	/
#172..	62	28,5	57	59,6	G1/4” G3/8” 3/8” NPT	G3/8”	Ch.20	/	6	G1/8”	M5	34	54,2	22	60	40,3	68	14	48	/	/
#173..	73	32,5	65	63,6	G3/8” G1/2” 1/2” NPT	G3/8”	Ch.20	/	6	G1/8”	M5	40	55	19	57	37,4	80	14	54	/	/
#174..	99	44	88	75	G1”	G1/2”	Ch.25	8,5	6	G1/8”	M5	52,5	71,5	27	67	45,5	105	22	74,5	25	70

Progressive start-up valve (AP - APW)

- Progressive start-up valve
- Available in 4 sizes with flow rates up to 15000 Nl/min and connections from 1/8” to 1”
- Suitable for downstream system gradual pressurization
- Downstream circuit filling time regulated via a built in flow regulator
- Full pressure is allowed once the down stream circuit pressure reaches 50% of the inlet pressure
- Atex certification (II 2GD or II 3GD)

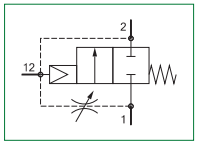

Technical characteristics					
Size		Size 1	Size 2	Size 3	Size 4
Body and connections type		Technopolymer body, integrated technopolymer connections (T version) Technopolymer body, metal connections (N version)			/ /
		/	Aluminium body, integrated aluminium connections (P version)		
IN / OUT connections	T version	G1/4”	G3/8”	G1/2”	not available
	N version	G1/8” - G1/4” - 1/4” NPT	G3/8” - G1/4” - 3/8” NPT	G3/8” - G1/2” - 1/2” NPT	
	P version	not available	G3/8”	G1/2”	G1”
Assembly configuration		Stand alone /			Panel mounted
Assembly positions		Indifferent			
Max. fittings torque IN / OUT connections		G1/8” metal: 15Nm G1/4” metal: 20Nm G1/4” technopolymer: 9Nm	G1/4” metal: 20Nm G3/8” metal: 25Nm G3/8” technopolymer: 16Nm	G3/8” metal: 25Nm G1/2” metal: 30Nm G1/2” technopolymer: 22Nm	G1”metal: 35Nm

Operational characteristics				
Size	Size 1	Size 2	Size 3	Size 4
Maximum working pressure	13 bar			10 bar
Minimum working pressure	2,5 bar			
Working temperature	-5°C +50°C			
Nominal flow rate at 6 bar with Δp=1 (from 1 to 2)	1400 Nl/min	2200 Nl/min	3600 Nl/min	15000 Nl/min
Fully open flow control device maximum flow rate	75 Nl/min	200 Nl/min	200 Nl/min	1000 Nl/min

Overall dimensions and technical information are provided solely for informative purposes and may be modified without notice

Weights				
Size	Size 1	Size 2	Size 3	Size 4
Technopolymer body version	80 g	150 g	240 g	/
Aluminium body version	/	235 g	370 g	1100 g

Materials
Exploded sectioned

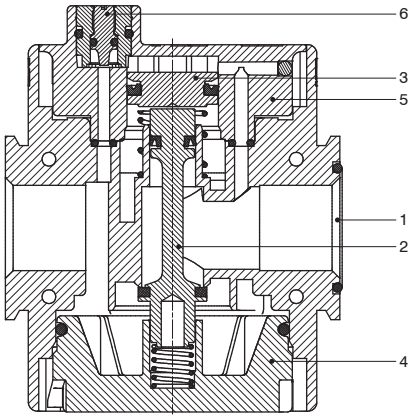

Progressive start-up valve		
1	Body	Polyamide Die-cast aluminium
2	Drive pin	Aluminium
3	Piston	Aluminium
4	Rear end cap	Polyamide / Die-cast aluminium
5	Central support	Polyamide / Aluminium
6	Modulating needle	Brass

Design

Size 1 - Size 2 - Size 3

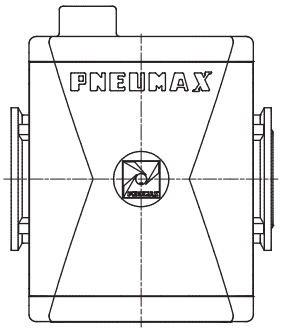

Size 4

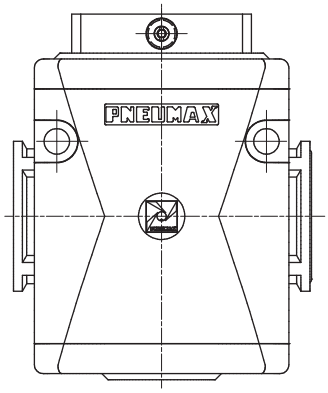

Order codes

T 17 3B AP

Version
N : Technopolymer body and metal inserts (not available for size 4)
T : Technopolymer body and thread (not available for size 4)
P : Aluminum body (not available for size 1)

Size and connections
1A : Size 1 - G1/8” only for N version
1B : Size 1 - G1/4” only for T - N versions
1C : Size 1 - 1/4” NPT only for N version
2A : Size 2 - G1/4” only for N version
2B : Size 2 - G3/8” for all versions
2C : Size 2 - 3/8” NPT only for N version
3A : Size 3 - G3/8” only for N version
3B : Size 3 - G1/2” for all versions
3C : Size 3 - 1/2” NPT only for N version
4B : Size 4 - G1” only for P version

Flow direction (only for size 4)
: From left to right
W : From right to left

Example : T173BAP : Size 3 progressive start-up valve G1/2”

Dimensions

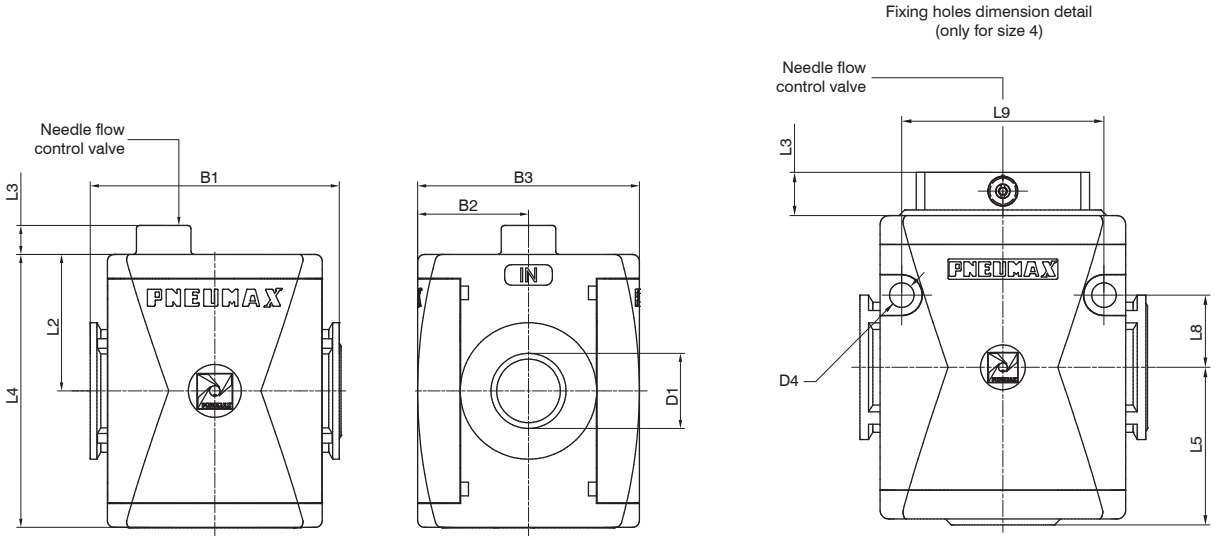

Model	B1	B2	B3	D1	D4	L2	L3	L4	L5	L8	L9
#171..	48	21	42	G1/8” G1/4”	/	27,5	12	55	/	/	/
#172..	62	28,5	57	G1/4” G3/8”	/	34	9,2	68	/	/	/
#173..	73	32,5	65	G3/8” G1/2”	/	40	8,7	80	/	/	/
#174..	99	44	88	G1”	8,5	52,5	13	105	54,5	25	70

Overall dimensions and technical information are provided solely for informative purposes and may be modified without notice

Air intake (PA)

- Pneumatic by-pass
- Available with 2 threaded connections
- Atex certification (II 2GD or II 3GD)

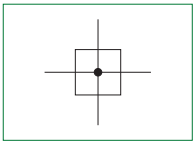

Technical characteristics					
Size		Size 1	Size 2	Size 3	Size 4
Body and connections type		Technopolymer body, integrated technopolymer connections (T version) Technopolymer body, metal connections (N version)			/ /
		/	Aluminium body, integrated aluminium connections (P version)		
IN / OUT / INTAKE connections	T version	G1/4”	G3/8”	G1/2 ”	not available
	N version	G1/8” - G1/4” - 1/4” NPT	G3/8” - G1/4” - 3/8” NPT	G3/8” - G1/2” - 1/2” NPT	
	P version	not available	G3/8”	G1/2 ”	G1”
Assembly configuration		Stand alone /			Panel mounted
Assembly positions		Indifferent			
Max. fittings torque IN / OUT / INTAKE connections		G1/8” metal: 15Nm G1/4” metal: 20Nm G1/4” technopolymer: 9Nm	G1/4” metal: 20Nm G3/8” metal: 25Nm G3/8” technopolymer: 16Nm	G3/8” metal: 25Nm G1/2” metal: 30Nm G1/2” technopolymer: 22Nm	G1”metal: 35Nm

Operational characteristics				
Size	Size 1	Size 2	Size 3	Size 4
Maximum working pressure	13 bar			20 bar
Working temperature	-5°C +50°C			-30°C +80°C (only for P version)

Weights				
Size	Size 1	Size 2	Size 3	Size 4
Technopolymer body version	52 g	95,5 g	151 g	/
Aluminium body version	/	248 g	370 g	720 g

Design

Size 1 - Size 2 - Size 3

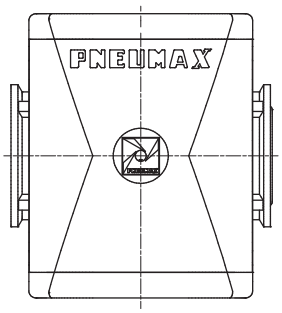

Size 4

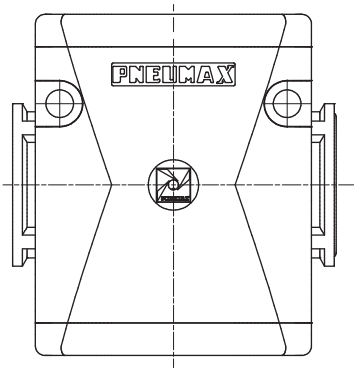

Order codes

T 17 3B PA

Version
N : Technopolymer body and metal inserts (not available for size 4)
T : Technopolymer body and thread (not available for size 4)
P : Aluminium body (not available for size 1)

Size and connections
1A : Size 1 - G1/8” only for N version
1B : Size 1 - G1/4” only for T - N versions
1C : Size 1 - 1/4” NPT only for N version
2A : Size 2 - G1/4” only for N version
2B : Size 2 - G3/8” for all versions
2C : Size 2 - 3/8” NPT only for N version
3A : Size 3 - G3/8” only for N version
3B : Size 3 - G1/2” for all versions
3C : Size 3 - 1/2” NPT only for N version
4B : Size 4 - G1” only for P version

Example : T173BPA : Size 3 air intake G1/2”

Dimensions

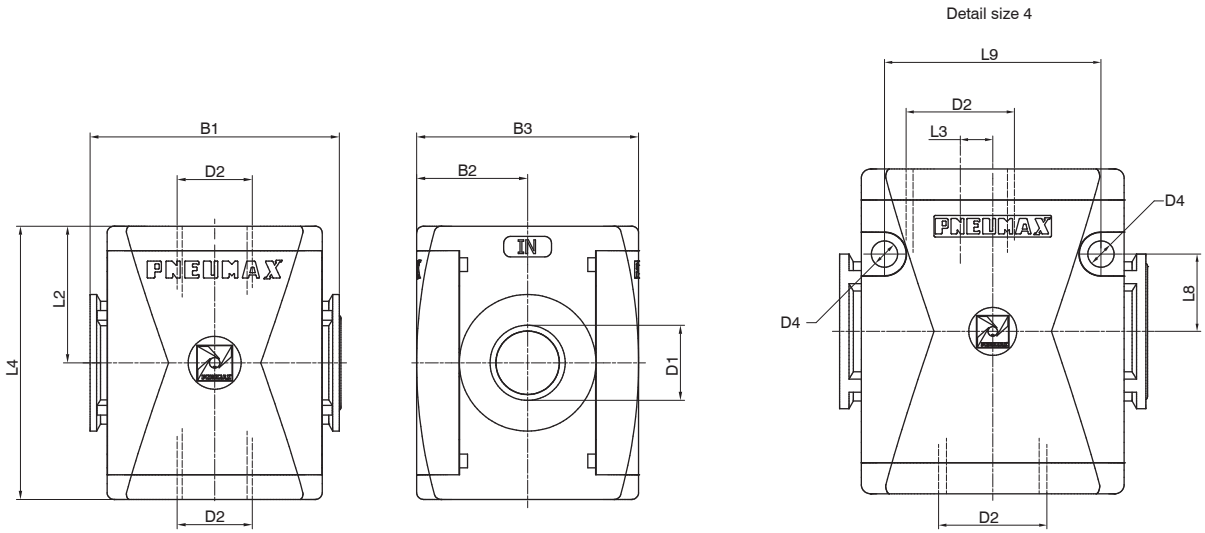

Model	B1	B2	B3	D1	D2	D4	L2	L3	L4	L8	L9
#171..	48	21	42	G1/8” G1/4” 1/4” NPT		/	27,5	/	55	/	/
#172..	62	28,5	57	G3/8” G1/4” 3/8” NPT		/	34	/	68	/	/
#173..	73	32,5	65	G3/8” G1/2” 1/2” NPT		/	40	/	80	/	/
#174..	99	44	88	G1”		8,5	52,5	10,5	105	25	70

Overall dimensions and technical information are provided solely for informative purposes and may be modified without notice

Pressure switch (PP)

- 2 to 10 bar adjustable pressure switch with electrical connection
- The electrical connection is made by mean of a 15 mm connector (DIN 43650 type C)
- The microswitch contact could be normally closed or open (change overswitch)

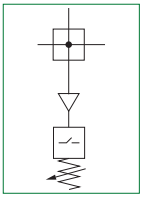

Technical characteristics					
Size		Size 1	Size 2	Size 3	Size 4
Body and connections type		Technopolymer body, integrated technopolymer connections (T version) Technopolymer body, metal connections (N version)			/ /
		/	Aluminium body, integrated aluminium connections (P version)		
IN / OUT / INTAKE connections	T version	G1/4”	G3/8”	G1/2 ”	not available
	N version	G1/8” - G1/4” - 1/4” NPT	G3/8” - G1/4” - 3/8” NPT	G3/8” - G1/2” - 1/2” NPT	
	P version	not available	G3/8”	G1/2”	G1”
Assembly configuration		Stand alone /			Panel mounted
Assembly positions		Indifferent			
Microswitch capacity		1A			
Microswitch maximum tension		250 VAC			
Microswitch IP Rating		IP65 (with connector installed)			
Max. fitting torque IN / OUT / INTAKE connections		G1/8” metal: 15Nm G1/4” metal: 20Nm G1/4” technopolymer: 9Nm	G1/4” metal: 20Nm G3/8” metal: 25Nm G3/8” technopolymer: 16Nm	G3/8” metal: 25Nm G1/2” metal: 30Nm G1/2” technopolymer: 22Nm	G1”metal: 35Nm

Operational characteristics				
Size	Size 1	Size 2	Size 3	Size 4
Maximum working pressure	13 bar			
Working temperature	-5°C +50°C			
Operating pressure range	2 - 10 bar			

Weights				
Size	Size 1	Size 2	Size 3	Size 4
Technopolymer body version	138 g	179 g	235 g	/
Aluminium body version	/	330 g	780 g	800 g

Design

Size 1 - Size 2 - Size 3

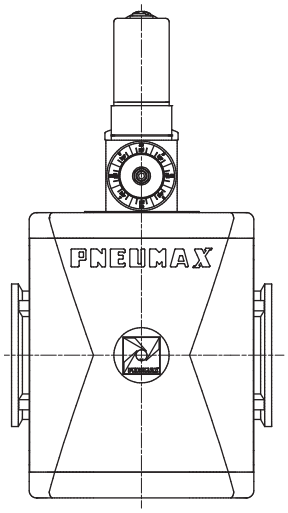

Size 4

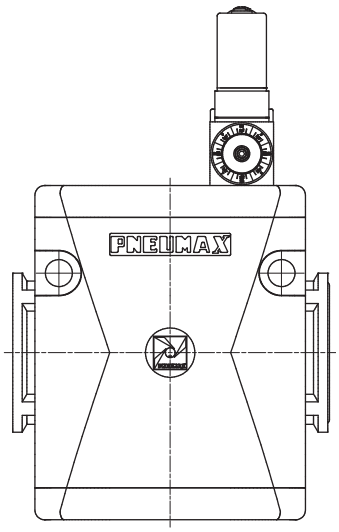

Order codes

T 17 3B PP

Version
N : Technopolymer body and metal inserts (not available for size 4)
T : Technopolymer body and thread (not available for size 4)
P : Aluminum body (not available for size 1)

Size and connections
1A : Size 1 - G1/8” only for N version
1B : Size 1 - G1/4” only for T - N versions
1C : Size 1 - 1/4” NPT only for N version
2A : Size 2 - G1/4” only for N version
2B : Size 2 - G3/8” for all versions
2C : Size 2 - 3/8” NPT only for N version
3A : Size 3 - G3/8” only for N version
3B : Size 3 - G1/2” for all versions
3C : Size 3 - 1/2” NPT only for N version
4B : Size 4 - G1” only for P version

Flow direction (only for P version)
: From left to right
W : From right to left

Example : T173BPP : Size 3 pressure switch G1/2”

Overall dimensions and technical information are provided solely for informative purposes and may be modified without notice

Dimensions

Detail size 4

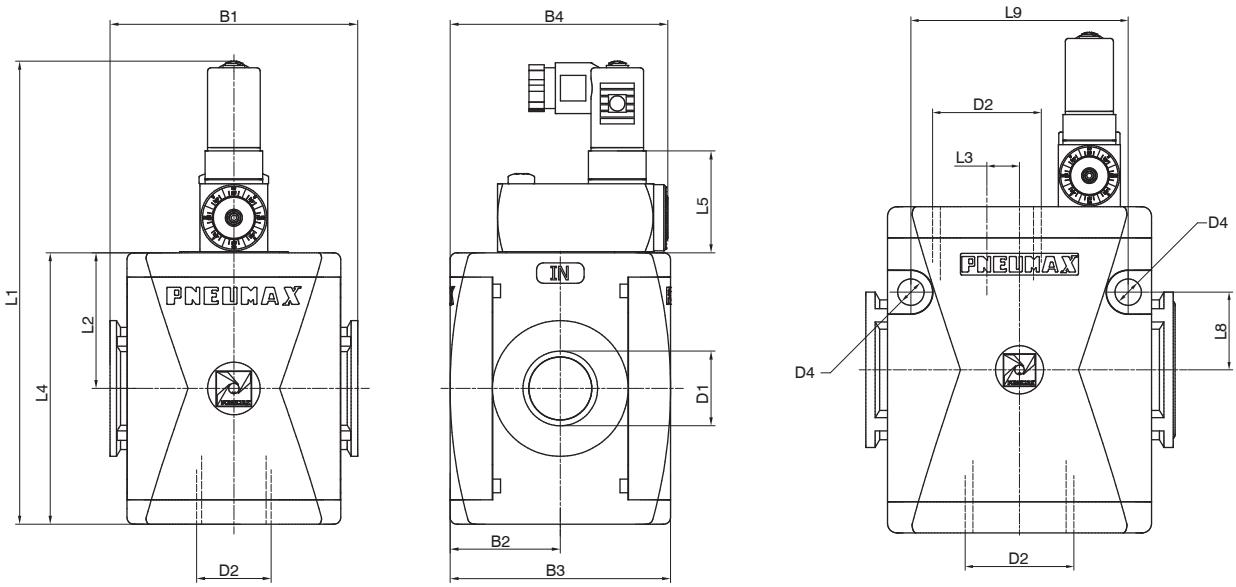

Model	B1	B2	B3	D1	D2	D4	L1	L2	L3	L4	L5	L8	L9
#171..	48	21	42	G1/8” G1/4” 1/4” NPT		/	114,7	27,5	/	55	32,7	/	/
#172..	62	28,5	57	G3/8” G1/4” 3/8” NPT		/	125	34	/	68	30	/	/
#173..	73	32,5	65	G3/8” G1/2” 1/2” NPT		/	137	40	/	80	30	/	/
#174..	99	44	88	G1”		8,5	162	52,5	10,5	105	30	25	70

Electrical connection

1 = neutral
2 = N.C. contact
3 = N.O. contact

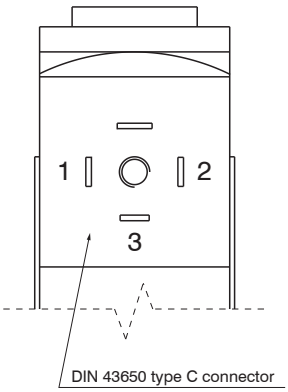

Air intake with pressure gauge or digital pressure switch integrated (PM-PW-PP-PZ)

- Available with pressure gauge or digital pressure switch integrated
- Air intake connection device available
- Material and version wide selection
- Available in 4 sizes with connections from 1/8” to 1”
- Atex certification (II 2GD or II 3GD) for Integrated pressure gauge version

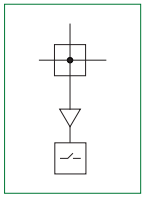

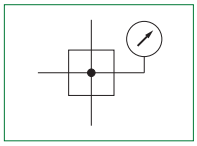

Technical characteristics					
Size		**Size 1**	**Size 2**	**Size 3**	**Size 4**
Body and connections type		Technopolymer body, integrated technopolymer connections Technopolymer body, metal connections			/ /
		/	Aluminium body, integrated aluminium connections		
IN / OUT connections	**T version**	G1/4”	G3/8”	G1/2”	not available
	N version	G1/8” - G1/4” - 1/4” NPT	G3/8” - G1/4” - 3/8” NPT	G3/8” - G1/2” - 1/2” NPT	
	P version	not available	G3/8”	G1/2”	G1”
Air intake connection		G1/4”	G3/8”	G3/8”	G1/2”
Assembly configuration		Stand alone /			Panel mounted
Assembly positions		Indifferent			
Pressure measurement		Integrated pressure gauge Digital pressure switch			
Max. fittings torque IN / OUT connections		G1/8” metal: 15Nm G1/4” metal: 20Nm G1/4” technopolymer: 9Nm	G1/4” metal: 20Nm G3/8” metal: 25Nm G3/8” technopolymer: 16Nm	G3/8” metal: 25Nm G1/2” metal: 30Nm G1/2” technopolymer: 22Nm	G1”metal: 35Nm

Operational characteristics				
Size	**Size 1**	**Size 2**	**Size 3**	**Size 4**
Maximum working pressure	13 bar			
Working temperature with integrated pressure gauge	-5°C +50°C	-30°C +80°C (only with metal body)		
Working temperature with digital pressure switch	0°C +50°C			

Overall dimensions and technical information are provided solely for informative purposes and may be modified without notice

Weights				
Size	Size 1	Size 2	Size 3	Size 4
Technopolymer body version with Integrated pressure gauge	83 g	161 g	249 g	/
Technopolymer body version with integrated digital pressure switch	111 g	189 g	277 g	/
Aluminium body version with Integrated pressure gauge	/	245 g	373 g	947 g
Aluminium body version with integrated digital pressure switch	/	273 g	401 g	963 g

Design

Size 1 - Size 2 - Size 3
Technopolymer body and integrated pressure gauge

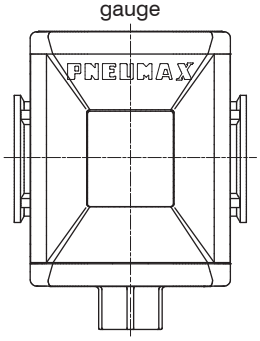

Size 1 - Size 2 - Size 3
Technopolymer body and integrated digital pressure switch

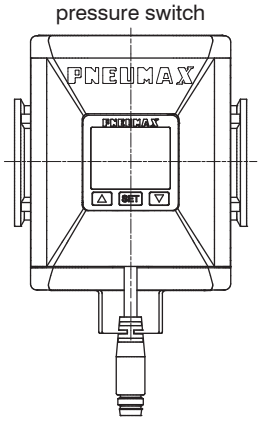

Size 2 - Size 3
Aluminium body and integrated pressure gauge

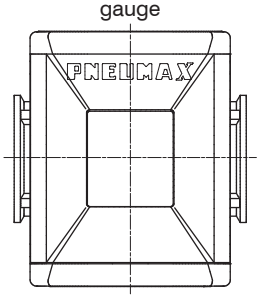

Size 2 - Size 3
Aluminium body and integrated digital pressure switch

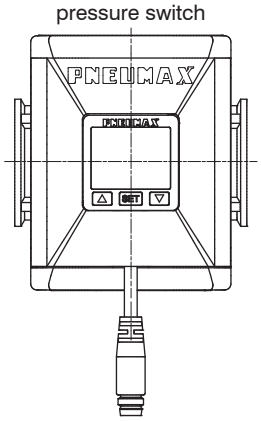

Size 4
Integrated pressure gauge version

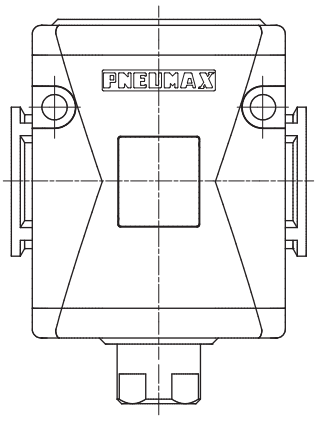

Size 4
Integrated digital pressure switch version

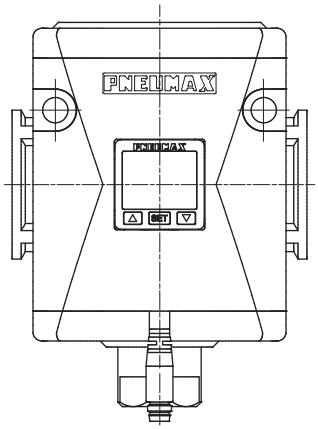

Order codes

T	17	3B	P	P	A

Version
N : Technopolymer body and metal inserts (not available for size 4)
T : Technopolymer body and thread (not available for size 4)
P : Aluminum body (not available for size 1)

Size and connections
1A : Size 1 - G1/8” only for N version
1B : Size 1 - G1/4” only for T - N versions
1C : Size 1 - 1/4” NPT only for N version
2A : Size 2 - G1/4” only for N version
2B : Size 2 - G3/8” for all versions
2C : Size 2 - 3/8” NPT only for N version
3A : Size 3 - G3/8” only for N version
3B : Size 3 - G1/2” for all versions
3C : Size 3 - 1/2” NPT only for N version
4B : Size 4 - G1” only for P version

Pressure measurement options
M : Integrated pressure gauge
W : Integrated pressure gauge Right - Left
P : Digital pressure switch
Z : Digital pressure switch Right - Left

Digital pressure switch options
A : Cable 150 mm + M8 PNP
B : Cable 150 mm + M8 NPN
C : Cable 2 m PNP
D : Cable 2 m NPN

Example : T173BPPA : M8 PNP digital pressure switch, size 3 G1/2”

Dimensions - Integrated pressure gauge version

Technopolymer body version

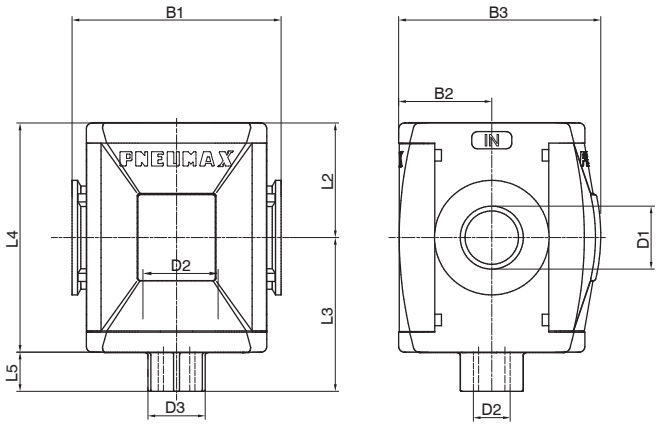

Fixing holes dimension detail
(only for size 4)

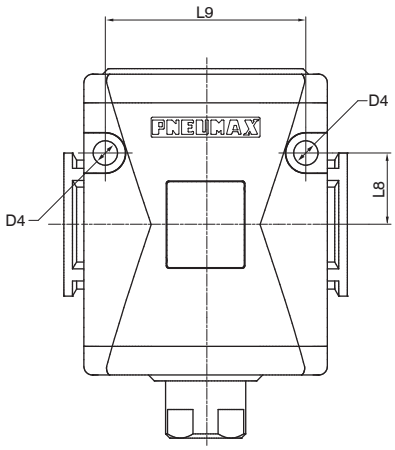

Aluminium body version (Size 2 - Size 3)

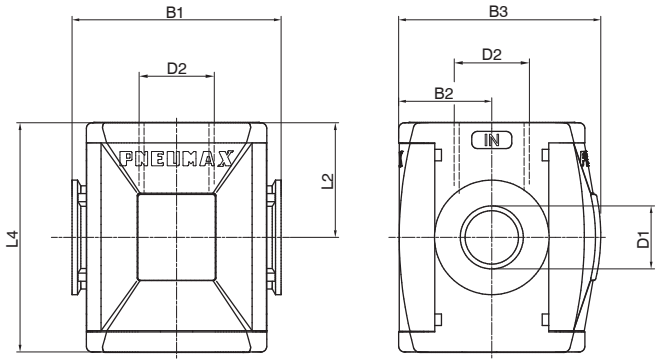

Overall dimensions and technical information are provided solely for informative purposes and may be modified without notice

Model	B1	B2	B3	D1	D2	D3	D4	L2	L3	L4	L5	L8	L9
#171..	48	21	48,5	G1/8” G1/4” 1/4” NPT	G1/4”	Ch. 17	/	27,5	38,5	55	11	/	/
#172..	62	28,5	62,5	G1/4” G3/8” 3/8” NPT	G3/8”	Ch. 20	/	34	48	68	14	/	/
#173..	73	32,5	70,5	G3/8” G1/2” 1/2” NPT	G3/8”	Ch. 20	/	40	54	80	14	/	/
#174..	99	44	90,5	G1”	G1/2”	Ch. 25	8,5	52,5	74,5	105	22	25	70

Variable dimensions - Digital pressure switch version

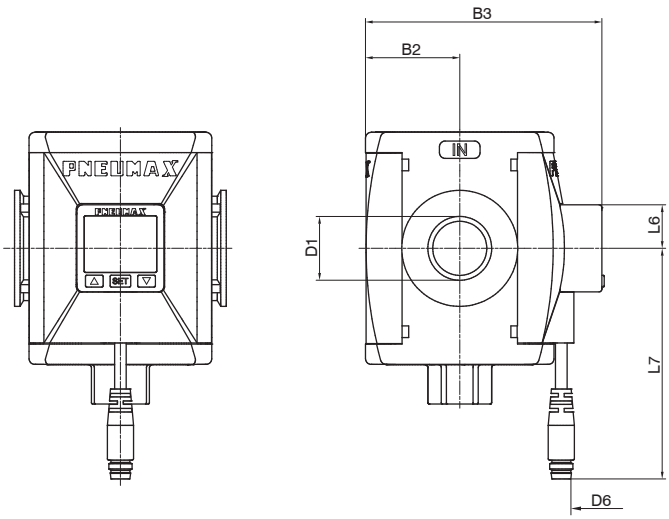

Model	B2	B3	D1	D6 - Type of digital pressure switch		L6	L7 - Type of digital pressure switch	
				A - B	C - D		A - B	C - D
#171..	21	60	G1/8” G1/4” 1/4” NPT	M8 - 3 PIN	3 x 0,129 mm, Ø4 mm	15	150	2000
#172..	28,5	73,5	G1/4” G3/8” 3/8” NPT					
#173..	32,5	81,5	G3/8” G1/2” 1/2” NPT					
#174..	44	101,5	G1”					

Digital pressure switch

- 3 color digital LCD display, easy readout
- 4 units of measurement for pressure indication
- Optional PNP or NPN digital output
- N.O. and N.C. output contact selection directly on the digital pressure switch
- Available with M8-3PIN connector or 3 wire cable length 2 m
- Available only in combination with a air intake

Output circuit wiring diagrams

PNP output

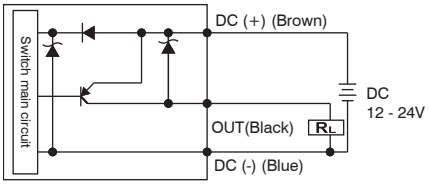

NPN output

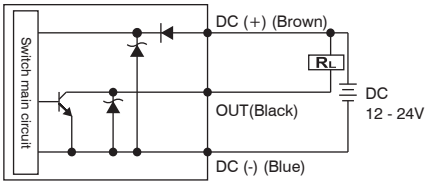

Digital pressure switch lay out

M8 connector pin layout

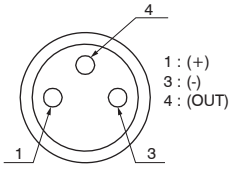

3 wires cable layout

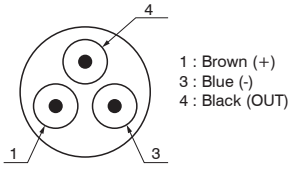

Cable ordering code

MCH1 : cable 3 wires l=2,5m with M8 connector
MCH2 : cable 3 wires l=5m with M8 connector
MCH3 : cable 3 wires l=10m with M8 connector

Connector

Technical characteristics	
Pressure range and display	0 - 10 bar
Max. inlet pressure	15 bar
Fluid	40μm filtered and dehumidified air
Display unit of measurement	MPa - kgf/cm² - bar - psi
Supply voltage	12 - 24 VDC
Current consumption	≤40mA (without load)
Digital output type	PNP - NPN
Type of contact output	Normally Open - Normally Closed
Max. load current	125 mA
Digital output activation mode	single threshold with fixed hysteresis - window with fixed hysteresis - window without hysteresis
Digital output activation time	0.05s - 0.25s - 0.5s - 1s - 2s - 3s (selections for chattering-proof options)
Display characteristics	Double 3 1/2 digit display Digital output status indication Three-pushbuttons touchpad
Indicator accuracy	≤±2% full scale value ± 1 digit
IP Rating	IP40
Working temperature	0°C +50°C
Cable section	3 x 0,129mm2, Ø4 mm, PVC

Overall dimensions and technical information are provided solely for informative purposes and may be modified without notice

Supply and discharge valves SAFELINE

General

Upon implementation of the AIRPLUS TG3 series, air-treatment units, PNEUMAX develops a supply and discharge valve, with an electropneumatic control and spring-return, fitted with a diagnostic system regarding the state of the valve, with the possibility of creating a double channel to determine the system's redundancy. The valve, as a safety feature, provides the interruption of the air supply and the exhaust of the air circuit it is connected to.
The version with one single channel emphasises the features of an EV 3/2 NC, monostable with electropneumatic control and spring-return, whose operation involves:
- condition of the VALVE AT REST, with a DE-ENERGISED coil; Port 1 (air supply) is not been connected to Port 2 (downstream air circuit). Port 2 is discharged out of Port 3;
- condition of the VALVE ACTIVATED, with an ENERGISED coil; Port 1 (air supply) is connected to Port 2 (downstream air circuit), with Port 3 (Discharge) closed.

By de-energising the coil, the system resets the condition of VALVE AT REST by means of the return spring, which repositions the spool. Once again Port 2 (downstream air circuit), discharges via Port 3. The state of the valve is constantly monitored by a diagnostic system, using a Hall effect sensor, which reads the position of the spool and consequently takes note of the valve's position.
The sensor is in the ON position when the valve is at rest (DE-ENERGISED coil), while it is in the OFF position when the valve is activated (ENERGISED coil).
The sensor is in the OFF position under conditions of an activated valve (DE-ENERGISED coil), indicating a possible problem.
The SAFELINE supply and discharge valve in the single version is a classified component in CATEGORY 2 according to ISO EN 13849 and is appropriate for use in safety circuits until PL=C.
The version with a double redundant channel is made using two single solenoid valves 3/2 NC provided with diagnostics, mounted in series so that the Port 2 of the first solenoid valve is linked to the Port 1 of the second solenoid valve. It is sufficient that only one of the EV is de-energised to guarantee the discharge of the air circuit. If one of the two EV must remain blocked due to a malfunction, the other one ensures the discharge function of the pneumatic installation. Even in this case, the diagnostic system of both solenoid valves constantly monitors the state of the 2 single EV.
The SAFELINE supply and discharge valve in the double version is a classified component in CATEGORY 4 according to ISO EN 13849 and is appropriate for use in safety circuits until PL=E.
Both single and double solenoid valves are provided with the following certifications released by BUREAU VERITAS:
- TYPE APPROVAL certificate according to the EN ISO 13849 regulations
- certification of examination of compliance in accordance to the machinery directive 2006/42/CE

The AIRPLUS SAFELINE are solenoid valves marked as ATEX → **II 3G Ex nA IIC T6 Gc (X)**
II 3D Ex tc IIIC T=80°C Dc (X) IP65

Construction characteristics

Body	Aluminium
Operatore Solenoide	Technopolymer
Rear end cap	Aluminium
Spool	Aluminium
Spool seals	Polyurethane
Piston	Aluminium
Spring	EN 10270-1 DH steel
Electrical Interface	Male MP12 4 PIN TYPE A connector

Operational characteristics

Fluid	Filtered air. No lubrication needed, if applied it shall be continuous.
Working temperature	-10°C +50°C
Minimum working pressure	2,5 bar
Maximum working pressure	10 bar

ASSEMBLY AND INSTALLATION:

Undertake the installation respecting the safety requirements with regards to the system and components for hydraulic and pneumatic transmissions. Install the device as close as possible to the point of use. Its assembly is possible in any position. Pay attention to the flow direction, indicated on the main body with the labels IN and OUT. During the components discharge, high levels of noise occur. The use of a silencer on the discharge port is recommended. Ensure there is sufficient space for assembly during the installation process. Please ensure that the discharge area is always clear, and in case a silencer is used, periodically verify that it is not obstructed. It is possible to integrate and install the device in an existing AIRPLUS group or in a new installation, or else to use the device individually attaching it by aligning the assembled unit with the relevant fastening flange for the supply and discharge valve, or to use the device individually attaching it by aligning the assembled unit with the type "Y" fastening flange for the double supply and discharge valve.

WARNING!
Pay particular attention to external factors such as the nearness of live wires, magnetic fields, metallic objects providing magnetic conduction very close to the device, which may influence and disturb the diagnostic system.

WARNING!
The electrical connection must be made exclusively by specialized personnel, using components that have no voltage present. Only use power supplies which can guarantee a safe electrical isolation of the working voltage in accordance to IEC/EN 60204-1. Additionally, observe the requirements anticipated by the PELV circuits in accordance to IEC/EN 60204-1.

CARE AND MAINTENANCE

WARNING!
Do not connect or disconnect the device when energised! Do not open and/or disassemble the parts that are included in the energised valve. Once the power supply is disconnected, wait for a few minutes before opening or disassembling parts of the valve that result in its disassembly.

Before carrying out any operation, it is essential to remove the pneumatic and power supply to the device and wait for the residual pressure to be completely discharged.
Please ensure that the discharge is always clear, and in case a silencer is used, periodically verify that it is not obstructed.
Periodically remove any dust deposits from the valve using a damp cloth. Use soapy water to clean the device.
Do not use corrosive or alcohol-based products.
For maintenance operations on internal components, please consult with PNEUMAX SPA.

Overall dimensions and technical information are provided solely for informative purposes and may be modified without notice

Supply and discharge valve single (VS)

Pneumatic symbol

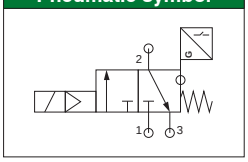

ATEX CE Ex
II 3G Ex nA IIC T6 Gc (X)
II 3D Ex tc IIIC T=80°C Dc (X) IP65

Electrical connection

PIN	Description
1	+24 VDC (Sensor)
2	+24 VDC (EV)
3	GND (Sensor+EV)
4	SENSOR OUTPUT

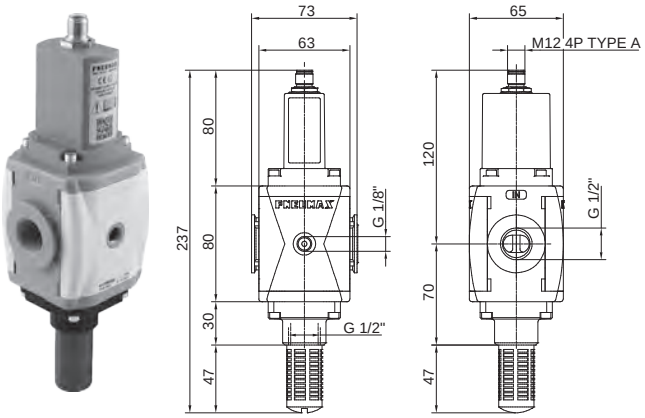

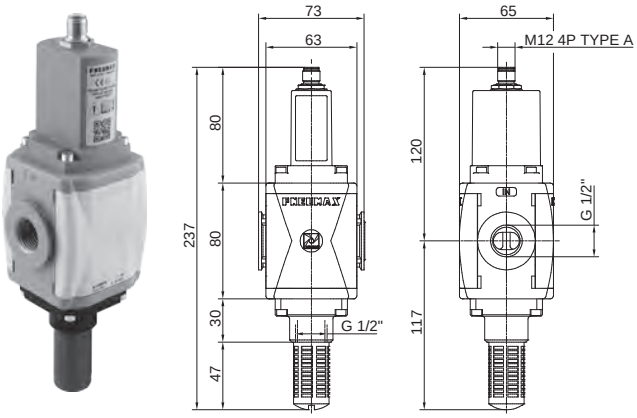

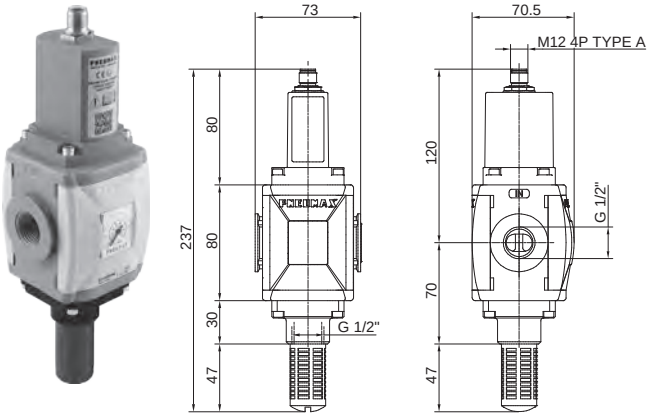

Dimensions with fixing bracket mounted

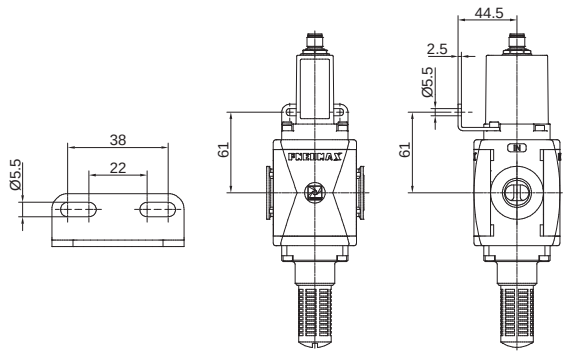

Electrical characteristics		Technical characteristics	
Electrical connection	Male M12 4 PIN TYPE A connector	Connections	G1/2" UNI-ISO 228/1
Coil Features	24VDC, 1 Watt	Fluid	Filtered air. No lubrication needed, if applied it shall be continuous.
Suppressor diode for coil reverse voltage spike	Present		
Supply voltage allowance	-5% +10%	Function	3/2 N.C. monostable
Electrical characteristics of sensor		Minimum working pressure	2,5 bar
Sensor characteristics	10 - 30V DC	Maximum working pressure	10 bar
Operating principle	Hall effect	Working temperature	-10°C +50°C
Contact type	N.O.	Flow rate at 6bar Δp (from 1 to 2)	3500 NL/min
Output type	PNP	Flow rate at 6bar Δp (from 2 to 3)	2000 NL/min
Permanent maximum current	100 mA	Flow rate at 6bar (from 2 to 3) with free discharge	3800 NL/min
Permanent maximum power	3 Watt		
Voltage drop max.	2 V	Type of installation	Stand alone
Safety characteristics		Assembly positions	Indifferent
Regulatory compliance	EN ISO 13849-1	Noise level	90 dB
Safety function fulfiled	Interruption of supply and unloading of the downstream pneumatic circuit	Response time ON ISO 12238	36 ms
Performance Level (PL)	c	Response time OFF ISO 12238	76 ms
UNI EN 13849 category	2	IP Rating	IP65 (with connector installed)
Safety Integrity Level (SIL)	1		
PFH_D	$1,7*10^{-6}$		
CE marking	In accordance with the EU Machinery Directive, annex V		

Ordering code	
N173BVSⓋⒻ	
Ⓥ	VERSIONS
	= Standard* (without connections)
	M = Integrated pressure gauge
	W = Integrated pressure gauge (Right-Left)
	G = G1/8" pressure gauge connection
Ⓕ	FIXING
	= Without fixing*
	01 = Fixing bracket mounted (Left-Right)
	02 = Fixing bracket mounted (Right-Left)

* no additional letter required

Installation tip of a safety system by means of a single valve

Please note: the safety valve is not sufficient alone to guarantee the safety function.
Its setup requires the use of a monitoring device.

In this setup, the SIEMENS® 3SK1112-1BB40 monitoring device has been indicated, activated by an S2 start / reset pushbutton, blocked by an S1 emergency shutdown key.
Said monitoring device, by means of the readings of the sensor placed inside the valve (reading made by means of the K1 relay), operates the activation of the valve itself. The monitoring device transmits the safety status as an output.
The preliminary estimate and the final verification of the achieved PL are the responsibility of the designer of the part of the system dedicated to providing the safety function.
Note: with a single valve, it is not possible to obtain a PL greater than "c".

Setup suggestions

- The double stop pushbutton is connected to clamps T1-IN1 and T2-IN2 of 3SK1112-1BB40.
- The start / reset pushbutton is connected between +24 V and the INS clamp of 3SK1112-1BB40.
- The valve is supplied between 0 V (Pin 3 of the supply connector) and the 14 clamp of 3SK1112-1BB40 (Pin 2 of the supply connector).
- The HALL effect sensor is supplied between 0 V (Pin 3 of the supply connector) and 24 V (Pin 1 of the supply connector).
- The HALL effect sensor drives (Pin 4 of the supply connector) the K1 relay, whose N.A. contact will be connected between the monitoring device's clamp T2 and INF.

The circuit diagram of the **suggested** configuration is provided, along with the configuration of 3SK1112-1BB40.

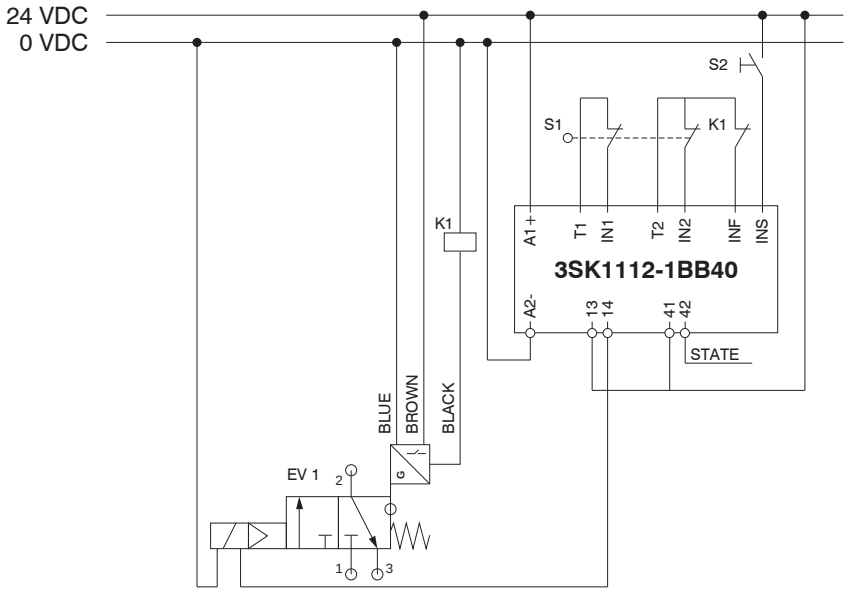

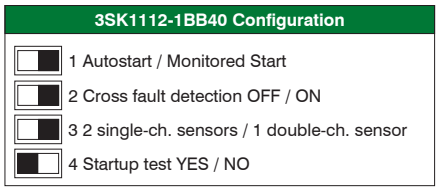

Analysis of malfunctions
The diagnostic system (monitoring device plus sensor) has the purpose of verifying the appearance of malfunctions within the valve that undermine the safety function. In particular, (with 3SK1112-1BB40 configured as in the illustration), the K1 relay prevents resetting the system by means of S2 when the coil is de-energised, but the sensor remains in the OFF position (K1 remains de-energised).

Overall dimensions and technical information are provided solely for informative purposes and may be modified without notice

Supply and discharge valve double (V2S)

Pneumatic symbol

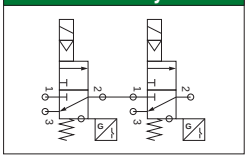

ATEX CE Ex
II 3G Ex nA IIC T6 Gc (X)
II 3D Ex tc IIIC T=80°C Dc (X) IP65

Electrical connection

PIN	Description
1	+24 VDC (Sensor)
2	+24 VDC (EV)
3	GND (Sensor+EV)
4	SENSOR OUTPUT

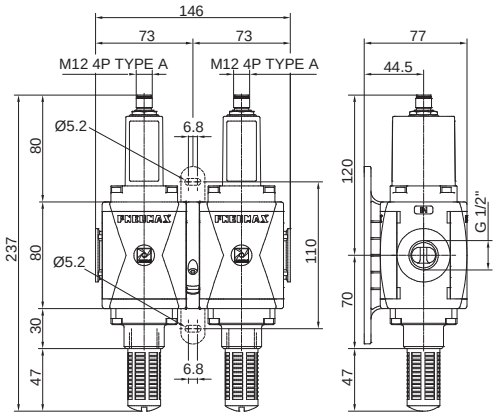

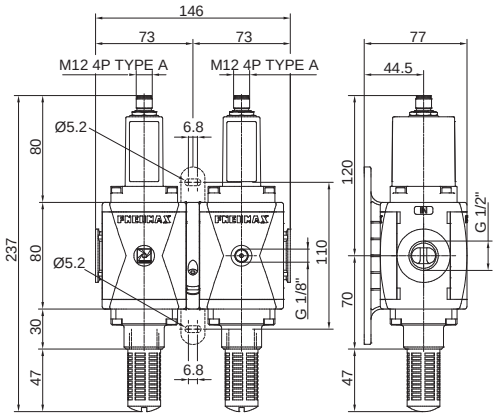

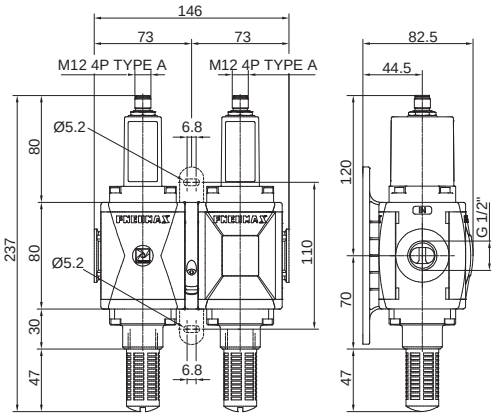

Electrical characteristics		Technical characteristics		Ordering code	
Electrical connection	Male M12 4 PIN TYPE A connector	Connections	G1/2" UNI-ISO 228/1	**N173BV2S**Ⓥ**F**Ⓓ	
Coil Features	24VDC, 1 Watt + 1 Watt	Fluid	Filtered air. No lubrication needed, if applied it shall be continuous.	Ⓥ	VERSIONS
Suppressor diode for coil reverse voltage spike	Present				= Standard* (without connections)
					M = Integrated pressure gauge
Supply voltage allowance	-5% +10%	Function	3/2 N.C. monostable		**G** = G1/8" pressure gauge connection
Electrical characteristics of sensor		Minimum working pressure	2,5 bar	**F**	FIXING
Sensor characteristics	10 - 30V DC	Maximum working pressure	10 bar		**X** = Flange X
Operating principle	Hall effect	Working temperature	-10°C +50°C		**Y** = Flange Y
Contact type	N.O.	Flow rate at 6bar Δp (from 1 to 2)	2500 NL/min		**K** = Aluminium flange Y
Output type	PNP	Flow rate at 6bar Δp (from 2 to 3)	2000 NL/min		**Z** = Aluminium flange X
Permanent maximum current	100 mA + 100 mA	Flow rate at 6bar (from 2 to 3) with free discharge	3800 NL/min	Ⓓ	FLOW RATE DIRECTION
					= Standard* (Left-Right)
Permanent maximum power	3 Watt + 3 Watt				**W** = (Right-Left)
Voltage drop max.	2 V + 2 V	Type of installation	Stand alone		
Safety characteristics		Assembly positions	Indifferent		
Regulatory compliance	EN ISO 13849-1	Noise level	90 dB		
Safety function fulfiled	Interruption of supply and unloading of the downstream pneumatic circuit	Response time ON ISO 12238	68 ms		
Performance Level (PL)	e	Response time OFF ISO 12238	79 ms		
UNI EN 13849 category	4	IP Rating	IP65 (with connector installed)		
Safety Integrity Level (SIL)	3				
PFH_D	$4,7*10^{-6}$				
CE marking	In accordance with the EU Machinery Directive, annex V				

* no additional letter required

Installation tip of a safety system by means of a double valve

Please note: the safety valve is not sufficient alone to guarantee the safety function.
Its setup requires the use of a monitoring device.
In this setup, the SIEMENS 3SK2112 monitoring device has been indicated, activated by an S2 start / reset pushbutton, blocked by an S1 emergency shutdown key. Said monitoring device, by means of the readings of the sensors placed inside the double valve, operates the activation of the valve itself. The preliminary estimate and the final verification of the achieved PL are the responsibility of the designer of the part of the system dedicated to providin the safety function.

Setup suggestions
- The double stop pushbutton is connected to clamps T1-F-IN1 and T2-F-IN2 of 3SK2112.
- The start /reset pushbutton is connected between +24 V and the F-IN10 clamp of 3SK2112.

The double valve, for notation simplicity, is indicated as consisting of 2 valves: EV1 and Ev2

EV1
- The valve is supplied between 0 V (Pin 3 of the supply connector) and the F-Q1 clamp of 3SK2112 (Pin 2 of the supply connector).
- The HALL effect sensor is supplied between 0 V (Pin 3 of the supply connector) and 24 V (Pin 1 of the supply connector).
- The HALL effect sensor is attached (Pin 4 of the supply connector) to the monitoring device's F-IN3 clamp.

EV2
- The valve is supplied between 0 V (Pin 3 of the supply connector) and the F-Q2 clamp of 3SK2112 (Pin 2 of the supply connector).
- The HALL effect sensor is supplied between 0 V (Pin 3 of the supply connector) and 24 V (Pin 1 of the supply connector).
- The HALL effect sensor is attached (Pin 4 of the supply connector) to the monitoring device's F-IN4 clamp.

The circuit diagram of the **suggested** configuration is provided.

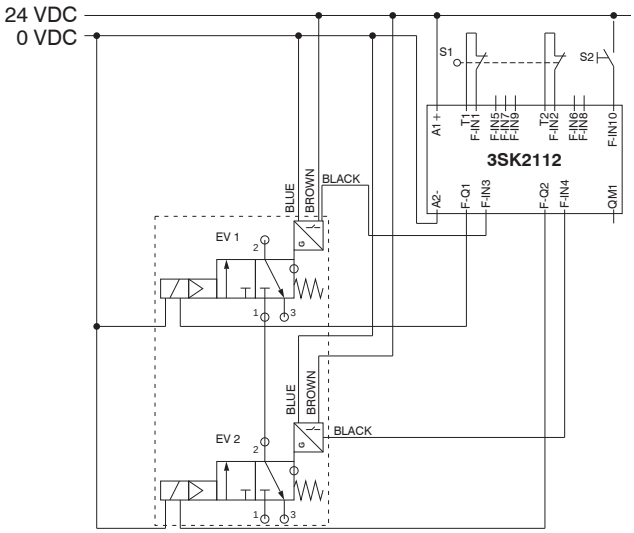

Analysis of malfunctions
The diagnostic system (monitoring device plus sensors) has the purpose of verifying the appearance of malfunctions within the valves, which undermine the safety function. In particular, the monitoring device must be appropriately programmed to avoid the system's reset by means of S2 when both coils are de-energised and at least one sensor remains in an OFF position.

Accessories

Pressure gauge

17070 [A] [C]

Version
A : Dial Ø40
B : Dial Ø50

Scale
A : 0 - 4 bar
B : 0 - 6 bar
C : 0 - 12 bar

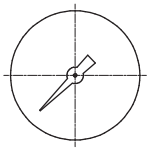

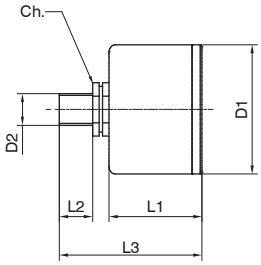

Model	L1	L2	L3	D1	D2	Ch
17070A..	26	10	44	41	Gc - 1/8"	14
17070B..	27	10	45	49	Gc - 1/8"	14

Overall dimensions and technical information are provided solely for informative purposes and may be modified without notice

Regulatory Framework

The purpose of the EU's Machinery Directive is to define the health and safety requirements in the framework of designing and constructing machinery. Since 2009, the new Machinery Directive has become effective in the European Union. Member countries of the EU are required to implement this standard.
The manufacturers of machinery can comply with the Machinery Directive applying the harmonised standards listed in the Official Journal of the European Union.

The design and manufacture of safety controls are developed in compliance with one of the two important harmonised standards:

UNI EN ISO 13849-1
Safety of machinery Safety-related parts of control systems Part 1: General design principles

EN 62061
Safety of machinery Functional safety of electrical, electronic and programmable control systems regarding safety

The UNI EN ISO 13849-1 standard is one of the most important harmonised standards, which has been widely used; it is intended to provide a guide to principles for design and integration of safety-related parts of the control system.

Each safety-related control system must be designed and constructed in accordance with the principles of ISO 12100 and ISO 14121 by which the possible risks are considered and assessed, in view of the intended uses and the reasonably anticipated incorrect uses.

The parts of a machinery's control system are called "Safety-related parts of control systems". Their capacity to perform a safety function under predictable conditions is assigned by means of five possible levels called **"performance levels" (PL)**.
These levels are defined in terms of probability of dangerous malfunction per hour.

PL - Performance Level	Average probability of dangerous malfunction per hour (1/h)
a	$\geq 10^{-5}$ to $< 10^{-4}$
b	$\geq 3x10^{-6}$ to $< 10^{-4}$
c	$\geq 10^{-6}$ to $< 3x10^{-6}$
d	$\geq 10^{-7}$ to $< 10^{-6}$
e	$\geq 10^{-8}$ to $< 10^{-10}$

The calculated PL must be greater or equal to the necessary value, which arises from the calculation of the risk correlated to one single function and to the need to reduce it to an acceptable level.

S1 Slight danger	**F1** Occasional danger and brief exposure	**P1** - possibly avoidable danger	**PL= a** **PL= b**
		P2 - largely unavoidable danger	
	F2 Frequent danger and long exposure	**P1** - possibly avoidable danger	
		P2 - largely unavoidable danger	**PL= c** **PL= d**
S2 Serious danger	**F1** Occasional danger and brief exposure	**P1** - possibly avoidable danger	
		P2 - largely unavoidable danger	
	F2 Frequent danger and long exposure	**P1** - possibly avoidable danger	
		P2 - largely unavoidable danger	**PL= e**

Manifold unit

- Modular system
- Compact and linear design
- Maximum flexibility and reliability
- Up to 10 items assembly with unlimited configuration
- Flange coupling plug-n-play configuration
- Maintenance possible without completely disassembling the group
- Manifold integrated safety function elements
- Material and version wide selection
- Available in 4 sizes with connections from 1/8” to 1”
- Atex certification (II 2GD or II 3GD)

Operational characteristics					
Size		Size 1	Size 2	Size 3	Size 4
Maximum working pressure *		10 bar / 13 bar / 16 bar / 20 bar			
Minimum working pressure *		0,5 bar / 2,5 bar			
Working temperature *		-5°C +50°C / -30°C +80°C / -40°C +80°C			
IN / OUT connections	T version	G1/4”	G3/8”	G1/2”	not available
	N version	G1/8” - G1/4” - 1/4” NPT	G3/8” - G1/4” - 3/8” NPT	G3/8” - G1/2” - 1/2” NPT	
	P and L version	not available	G3/8” - 1/4” NPT	G1/2” - 1/2” NPT	G1” - 1” NPT
Assembly configuration		Stand alone Panel mounted thru fixing elements			
Assembly positions		Vertical ±5° with no restriction in case of elements without bowl			
Max. fittings torque IN / OUT connections		G1/8” metal: 15Nm G1/4” metal: 20Nm G1/4” technopolymer: 9Nm	G1/4” metal: 20Nm G3/8” metal: 25Nm G3/8” technopolymer: 16Nm	G3/8” metal: 25Nm G1/2” metal: 30Nm G1/2” technopolymer: 22Nm	G1”metal: 35Nm
Max. fittings torque G1/8” pressure gauge connection		G1/8” metal: 15Nm G1/8” technopolymer: 4Nm			

* Module configuration shall be identified according to individual technical details of each items included in applicable manifold

Manifold assembly

The assembly operation of selected items (module) is carried out thru dedicated quick connection flanges.
Both aluminum and techno polymer materials selection available, with fixing holes in case of panel mounting configuration.
Due to its design, Pneumax connection flanges allow user-friendly maintenance activities with no need of entire manifold disassembling procedure.

Thanks to a wide range of modules with different functions and characteristics, together with a wide choice of materials selection, make the Pneumax AIRPLUS air treatment units a robust, reliable and extremely flexible modular system, adaptable to different applications. AIRPLUS units properly assembled are modular with unlimited configurations and solutions and capable to satisfy and fulfill all their functions of compressed air treatment. Pneumax Airplus air treatment units can be integrated with safety elements that comply with EN-ISO 13849-1 and CE marking according to EU Machinery Directive, Annex V. Simple instruction provides an easy manifold configuration.

Overall dimensions and technical information are provided solely for informative purposes and may be modified without notice

Configuration instructions

Manifold configuration as per following instructions.
As a result, a dedicated code will be provided, and the two main parameters will be identified, as follow:
Features applicable to all items included in manifold (i.e. version, size, connection, flow direction)
Assembly sequence of the single item + coupling flanges
Note: Max 10 items for each manifold.

The group can be configured by consulting the Pneumax catalog here:
http://pneumax.partcommunity.com/3d-cad-models/
also reachable through a special link available on the home page of the Pneumax website

Order codes

Initial code that identifies the main characteristics of the group such as:
- version
- size and connections
- flow direction

These will be the same for all the modules included in manifold, in accordance with the characteristics of the individual items available

Code that identifies the succession of individual modules and related coupling flanges included in manifold from module 1 to 10

COMPLETE APPLICABLE ORDER CODE

G [ ] 17 [ ][ ] - [ ] - [ ] - [ ] [ ] → [ ]

Version
N : Technopolymer body and metal inserts (not available for size 4)
T : Technopolymer body and thread (not available for size 4)
P : Aluminum body (not available for size 1)
L : Aluminum body, low temperature (not available for size 1)

Size and connections
1A : Size 1 - G1/8” only for N version
1B : Size 1 - G1/4” only for T - N versions
1C : Size 1 - 1/4” NPT only for N version
2A : Size 2 - G1/4” only for N version
2B : Size 2 - G3/8” for all versions
2C : Size 2 - 3/8” NPT only for N version - 1/4” NPT only for P - L versions
3A : Size 3 - G3/8” only for N version
3B : Size 3 - G1/2” for all versions
3C : Size 3 - 1/2” NPT only for N - P - L versions
4B : Size 4 - G1” only for P - L versions
4C : Size 4 - 1” NPT only for P - L versions

Flow direction
: From left to right
W : From right to left

Module 1
See list of modules

Mounting hardware 1
X : Technopolymer flange X
Y : Technopolymer flange Y
K : Aluminium flange X
T : Aluminium flange Y

Module 2
See list of modules

Mounting hardware 1
X : Technopolymer flange X
Y : Technopolymer flange Y
K : Aluminium flange X
T : Aluminium flange Y

↓

Module 10
See list of modules

List of modules

Below the list of modules available for assembly of the manifold

FILTER	F	**A** : 5 µm **B** : 20 µm **C** : 50 µm	: Semi-automatic drain **S** : Automatic drain	: Technopolymer protection - PC bowl **N** : Technopolymer protection - PA bowl **P** : Metal protection - PC bowl **R** : Metal protection - PA bowl **T** : Metal bowl
COALESCING FILTER	DA	: Semi-automatic drain **S** : Automatic drain	: Technopolymer protection - PC bowl **N** : Technopolymer protection - PA bowl **P** : Metal protection - PC bowl **R** : Metal protection - PA bowl **T** : Metal bowl	
OIL REMOVAL FILTER	D	**AV** : Size 4 **BV** : Size 3 **CV** : Size 3 oversize cartridge	: Semi-automatic drain **S** : Automatic drain	: Technopolymer protection - PC bowl **N** : Technopolymer protection - PA bowl **P** : Metal protection - PC bowl **R** : Metal protection - PA bowl **T** : Metal bowl
CARBON FILTER	DD	: Technopolymer protection - PC bowl **N** : Technopolymer protection - PA bowl **P** : Metal protection - PC bowl **R** : Metal protection - PA bowl **T** : Metal bowl		

REGULATOR	R	: G1/8" connection **M** : Integrated pressure gauge **W** : Integrated pressure gauge Right - Left **P** : Digital pressure switch **Z** : Digital pressure switch Right - Left	**A** : 0-2 bar **B** : 0-4 bar **C** : 0-8 bar **D** : 0-12 bar	: With relieving **F** : Controlled refiel and improved relieving **L** : Without relieving **R** : Improved relieving	: Standard knob **K** : Lockable knob	**A** : Cable 150mm M8 PNP **B** : Cable 150mm M8 NPN **C** : Cable 2m PNP **D** : Cable 2m NPN

FILTER REGULATOR	E	: G1/8" connection **M** : Integrated pressure gauge **W** : Integrated pressure gauge Right - Left **P** : Digital pressure switch **Z** : Digital pressure switch Right - Left	**A** : 5 µm **B** : 20 µm **C** : 50 µm	**A** : 0-2 bar **B** : 0-4 bar **C** : 0-8 bar **D** : 0-12 bar	: Semi-automatic drain **S** : Automatic drain	: With relieving **L** : Without relieving	: Standard knob **K** : Lockable knob	**A** : Cable 150mm M8 PNP **B** : Cable 150mm M8 NPN **C** : Cable 2m PNP **D** : Cable 2m NPN	: Technopolymer protection - PC bowl **N** : Technopolymer protection - PA bowl **P** : Metal protection - PC bowl **R** : Metal protection - PA bowl **T** : Metal bowl

LUBRICATOR	L	: No electric level sensor device **A** : Electrical minimum level sensor NO **C** : Electrical minimum level sensor NC	: Technopolymer protection - PC bowl **N** : Technopolymer protection - PA bowl **P** : Metal protection - PC bowl **R** : Metal protection - PA bowl

SHUT OFF VALVE	V	**L** : Manual **P** : Pneumatic **E** : Solenoid	**15mm coil** **A4** : 12 V DC **A5** : 24 V DC **A6** : 24 V AC (50-60 Hz) **A7** : 110 V AC (50-60 Hz) **A8** : 230 V AC (50-60 Hz) **A9** : 24 V DC (1 Watt) **22mm coil** **B2** : Mechanical M2, without coil **B4** : 12 V DC **B5** : 24 V DC **B6** : 24 V AC (50-60 Hz) **B7** : 110 V AC (50-60 Hz) **B8** : 230 V AC (50-60 Hz) **B9** : 24 V DC (2 Watt) **30mm coil** **C5** : 24 V DC **C6** : 24 V AC (50-60 Hz) **C7** : 110 V AC (50-60 Hz) **C8** : 230 V AC (50-60 Hz) **C9** : 24 V DC (2 Watt)

SAFETY VALVE	V	**S** : Single **2S** : Double	: Without connection **M** : Integrated pressure gauge **W** : Integrated pressure gauge (Right - Left) **G** : G1/8" pressure gauge connection	**X** = Flange X **Y** = Flange Y **K** = Aluminium flange Y **Z** = Aluminium flange X

PROGRESSIVE START-UP VALVE	AP	: Size 1 - Size 2 - Size 3 **W** : Size 4 - flow direction Right - Left
AIR INTAKE	PA	

AIR INTAKE WITH PRESSURE GAUGE OR DIGITAL PRESSURE SWITCH INTEGRATED	P	**M** : Integrated pressure gauge **W** : Integrated pressure gauge (Right - Left) **P** : Integrated digital pressure switch **Z** : Integrated digital pressure switch (Right - Left)	**A** : Cable 150mm M8 PNP **B** : Cable 150mm M8 NPN **C** : Cable 2m PNP **D** : Cable 2m NPN

PRESSURE SWITCH	PP	: Size 1 - Size 2 - Size 3 **W** : TG4 - flow direction Right - Left

Examples of module identification: 5µm filter, automatic drain, metal bowl is identified as: **F A S T**

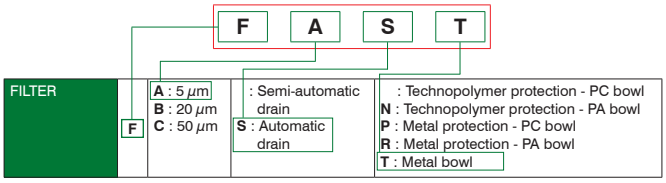

- Filter regulator with pressure gauge 50µm, 0-12 bar semi-automatic drain, without relieving, technopolymer bowl protection, PA bowl, is identified as: **E M C D L N**

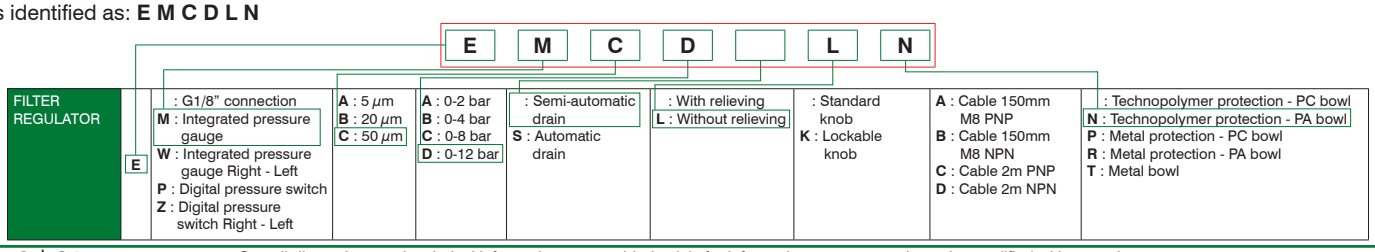

Overall dimensions and technical information are provided solely for informative purposes and may be modified without notice

AIRPLUS assembled groups configuration

Configuration sample:
- Shut off valve
- Filter regulator, 20µm, 0-12bar, automatic drain
- Lubricator with electrical minimum level sensor NO
- Electric shut off valve, 22mm, without coil
- Progressive start-up valve

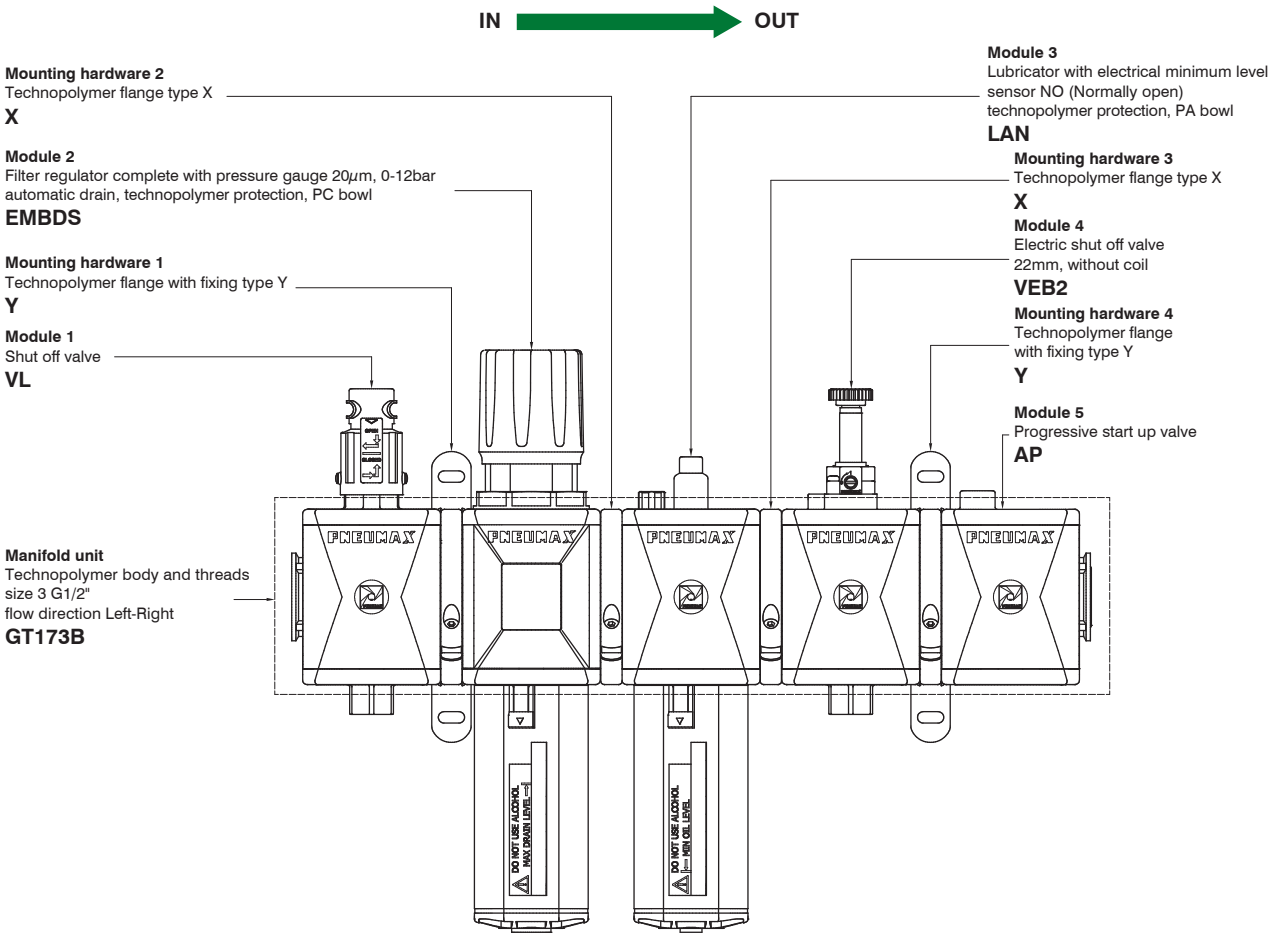

Applicable order code:

Initial code that identifies the main characteristics of the group such as:
- version
- size and connections
- flow direction

These will be the same for all the modules included in manifold, in accordance with the characteristics of the individual items available

Code that identifies the succession of individual modules and related coupling flanges included in manifold from module 1 to 10

G	T	17	3B		-	VL	-	Y	-	EMBDS	-	X	-	LAN	-	X	-	VEB2	-	Y	-	AP

GT173 - VL - Y - EMBDS - X - LAN - X - VEB2 - Y - AP

Flanges positioning schematic

Here below some indications related to flanges positioning according to the number of seats.
Pneumax recommend configuration in compliance with the following schematic:

Group 2 seats	1	Y	2															
Group 3 seats	1	Y	2	Y	3													
Group 4 seats	1	Y	2	X	3	Y	4											
Group 5 seats	1	Y	2	X	3	X	4	Y	5									
Group 6 seats	1	Y	2	X	3	Y	4	X	5	Y	6							
Group 7 seats	1	Y	2	X	3	X	4	Y	5	X	6	Y	7					
Group 8 seats	1	Y	2	X	3	X	4	Y	5	X	6	X	7	Y	8			
Group 9 seats	1	Y	2	X	3	X	4	Y	5	X	6	Y	7	X	8	Y	9	
Group 10 seats	1	Y	2	X	3	X	4	Y	5	X	6	X	7	Y	8	X	9	Y	10

Y: Y type flange (Aluminium or technopolymer)
X: X type flange (Aluminium or technopolymer)
1 - 10 : AIRPLUS modules

Quick coupling flanges

Pneumax Airplus quick coupling flanges series allow both module rapid fixing and panel mounted configuration. Due to its design, Pneumax connection flanges allow user-friendly maintenance activities with no need of entire manifold disassembling procedure.
Two types of flange are available: X type flange for assembling the modules together, and Y type flange suitable for panel mounted also. Both types are made of technopolymer or die-cast aluminum.

Overall dimensions and technical information are provided solely for informative purposes and may be modified without notice

Technopolymer flanges

Flange Y

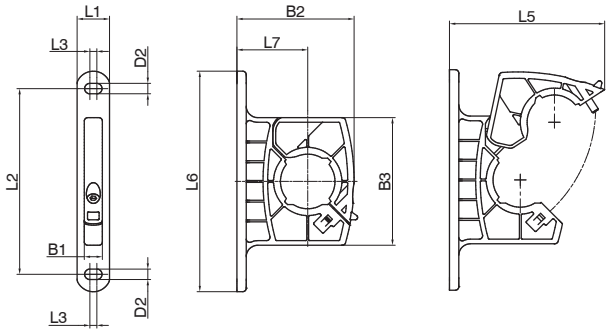

Flange X

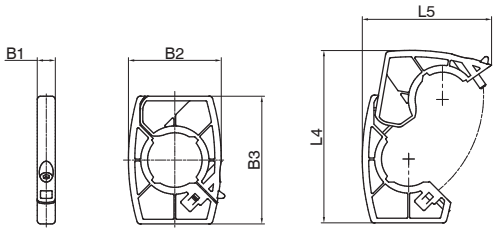

Model	B1	B2	B3	D2	L1	L2	L3	L4	L5	L6	L7
T171Y	7,8	50,5	55	Ø4,5	14	80	3	/	66	95	30,5
T171X		40		/	/	/	/	74,5	55,5	/	/
T172Y	9,7	67,6	68	Ø5,2	18	95	6,8	/	86,5	117,9	40,5
T172X		53,6		/	/	/	/	96,5	72,5	/	/
T173Y	9,7	75,5	80	Ø5,2	18	110	6,8	/	98,3	133	44,5
T173X		62		/	/	/	/	112,8	85	/	/
T174Y	13,7	106,5	105	Ø8,5	25	148	6,5	/	133,5	175	64
T174X		85		/	/	/	/	153,5	112	/	/

Aluminium flanges

Flange Y

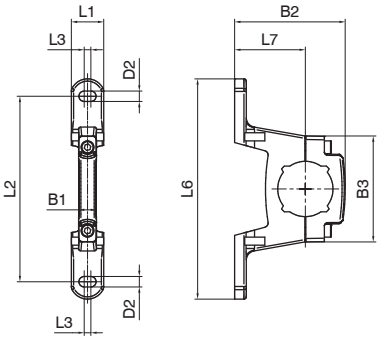

Flange X

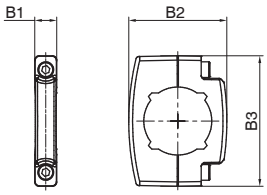

Model	B1	B2	B3	D2	L1	L2	L3	L4	L5	L6	L7
N171Y	7,8	47,7	45,7	Ø4,5	14	80	3	/	66	95	30,5
N171X		34,4		/	/	/	/	74,5	55,5	/	/
N172Y	9,7	64,6	55,6	Ø5,2	18	95	6,8	/	86,5	117,9	40,5
N172X		55,6		/	/	/	/	96,5	72,5	/	/
N173Y	9,7	75,5	56	Ø5,2	18	110	6,8	/	98,3	133	44,5
N173X		62		/	/	/	/	112,8	85	/	/
N174Y	13,7	106,5	102	Ø8,5	25	148	6,5	/	133,5	175	64
N174X		85		/	/	/	/	153,5	112	/	/

Product overview

PRODUCT	BODY MATERIAL	SIZES AND CONNECTIONS			
		SIZE 1	SIZE 2	SIZE 3	SIZE 4
FILTER	Zinc alloy	G1/8" - G1/4"	/	/	/
	Technopolymer	G1/8" - G1/4"	/	/	/
	Aluminum	/	G1/4" - G3/8"	G3/8" - G1/2" - G 3/4"	G1"
DYNAMIC DRIER	Aluminum	/	/	/	G1"
FILTER REGULATORS	Zinc alloy	G1/8" - G1/4"	/	/	/
	Technopolymer	G1/8" - G1/4"	/	/	/
	Aluminum		G1/4" - G3/8"	G3/8" - G1/2" - G 3/4"	/
REGULATORS	Zinc alloy	G1/8" - G1/4"	/	/	/
	Technopolymer	G1/8" - G1/4"	/	/	/
	Aluminum		G1/4" - G3/8"	G3/8" - G1/2" - G 3/4"	G1"
REGULATORS WITH INTEGRATED PRESSURE GAUGE	Zinc alloy	G1/8" - G1/4"	/	/	/
	Technopolymer	G1/8" - G1/4"	/	/	/
	Aluminum	/	G1/4" - G3/8"	G3/8" - G1/2"	/
HIGH SENSITIVE AIR PRESSURE REGULATORS WITH HIGH FLOW RATE RELIEVING	Aluminum	G1/4"		G1/2"	/
HIGH SENSITIVE PRESSURE REGULATOR WITH PNEUMATIC PILOT	Aluminum	/	/	G1/2"	/
PILOTED PRESSURE REGULATORS	Aluminum	/	G1/4" - G3/8"	G3/8" - G1/2"	G1"
PANEL MOUNTING PRESSURE REGULATOR	Technopolymer	G1/8" - G1/4"	/	/	/
PRESSURE REGULATORS FOR MANIFOLD	Zinc alloy	G1/8" - G1/4"	/	/	/
MANIFOLD PRESSURE REGULATORS	Zinc alloy	G1/8" - G1/4"	/	/	/
LUBRICATORS	Zinc alloy	G1/8" - G1/4"	/	/	/
	Technopolymer	G1/8" - G1/4"	/	/	/
	Aluminum	/	G1/4" - G3/8"	G3/8" - G1/2" - G 3/4"	G1"
SHUT-OFF VALVE	Zinc alloy	G1/4"	/	/	/
	Technopolymer	G1/4"	/	/	/
	Aluminum	/	G3/8"	G1/2"	G1"
ELECTRIC SHUT-OFF VALVE	Zinc alloy	G1/4"	/	/	/
	Technopolymer	G1/4"	/	/	/
	Aluminum	/	G3/8"	G1/2"	/
PNEUMATIC SHUT-OFF VALVE	Zinc alloy	G1/4"	/	/	/
	Technopolymer	G1/4"	/	/	/
	Aluminum	/	G3/8"	G1/2"	/
PROGRESSIVE START-UP VALVE	Aluminum	G1/4"	G3/8"	G1/2"	G1"
AIR INTAKE	Aluminum	G1/4"	G3/8"	G1/2"	G1"
AIR INTAKE -"H" PROFILE	Aluminum	G1/4"	G3/8"	G1/2"	/
PRESSURE SWITCH COMPLETE WITH ADAPTER	Aluminum	G1/8"	G3/8"	G1/2"	Ø36

Overall dimensions and technical information are provided solely for informative purpose and may be modified without notice.

Air service units, series 1700

- **Modular sistem**
- **Available for 4 sizes with connections from 1/8” to 1”**
- **ATEX certification (II 2GD o II 3GD) on request**

Constructuion and working characteristics
1700 air treatment series includes a wide range of elements for individual use or modular assembling.
Available in 4 sizes e connections from 1/8” to 1”.
The bowls are made in zinc alloy body with zinc alloy integrated connections, technopolymer with integrated metal connections for size 1 and aluminium with integrated aluminium connections for sizes 2, 3 and 4.
The bowls are in Nylon, with technopolymer protection for sizes 1, 2, 3 (also available for size 1 without protection). The bowls are in metal with condensation drain display for size 4.
Filters can be equipped with manual or semiautomatic condensation drain; furthermore it’s possible to install the automatic draining device inside the bowl.
Wall mounting by means of screws directly through the body and hidden by protective covers.
The pressure regulator handle is lockable in the desired position, the shut-off valves are lockable with a maximum of three pad-locks to prevent accidents or damages due to unauthorized operation.
The lubricator oil flow is adjustable with proper handle and it is visibly checked through the sight dome.
The progressive start-up valve, pneumatically or electropneumatically controlled, allows air supply to the circuit progressively and with adjustable time. The accessories like panel mounted brackets, pressure gauges with different scales and diameters and the air intake blocks are completing the range. They are assembled between the elements to get filtered or filtered non-lubricated air in the system.

Instruction for installation and operation
Pay attention to install a group or a single component with air flow direction according to the arrows and to the following sequence: filter, pressure regulator, lubricator and with bowls downwards. The group can be fixed to the wall by removing the covers, which can be installed again after fixing for covering the screws. Do not exceed the recommended torque while assembling the connectors.
Do not exceed the recommended air pressure and temperature limits. The moisture should not exceed the level marked on the bowl and it can be drawn off and carried by a flexible tube of Ø 6/4 directly connected to the discharge valve handle.
The pressure should be set from minimum to maximum, rotating the adjusting handle clockwise.
As lubricant, we suggest to use oil class FD22 or HG32. Verify that the lubricator is not fed with a flow lower than the minimum operational.
To set the oil flow rotate the proper adjusting handle in order to get one drop of oil every 300-600 liters of air.
The oil flow will be kept automatically and proportionally to the air flow. The oil can be refilled by mean of proper plug or directly into the bowl after having de-pressurized the system. Do not exceed the maximum level indicated on the bowl. For opening the shut-off valve push and rotate clockwise the operating handle. For closing it and consequently discharging the down stream line, rotate the handle counter-clockwise.

Maintenance
Clean the bowls with water and detergent. Do not use alcohol.
The filter element made with HPDE is reusable by blowing and cleaning it with proper detergent. For replacing or cleaning it, remove the bowl and unscrew the baffle spins.
Replace the pressure regulator diaphragm whenever the operation is not correct or there is a continuos air leaking through the relieving (over pressure discharge); reinstall the adjusting mechanism support, locking it with about 8 Nm torque. In case it is necessary to replace the lubricator transparent dome, tight it at 5 Nm torque maximum.

Overall dimensions and technical information are provided solely for informative purpose and may be modified without notice.

Filters

- Double filter action: air flow centrifugation and filter element
- Available in 4 sizes with flow rates up to 10000 Nl/min and connections from 1/8” to 1”
- Filtering cartridge made of HDPE available in three different filtration grades (5μm, 20μm, 50μm)
- Filter cartridge can be regenerated by washing / blowing it or replaced
- Bowls screwed to the body (Size 1)
- Bowl assembly via bayonet type quick coupling mechanism with safety button (Size 2 - Size 3 - Size 4)
- Semi-automatic or automatic condensation drain
- Atex certification (II 2GD o II 3GD) on request

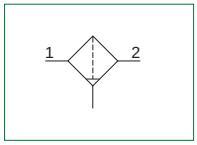

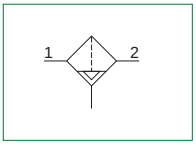

Note
In order to ensure that any fluid discharged by the auto drain assembly is adequately drained away, it is recommended you to use a 6mm fitting and tube

Technical characteristics	Size			
	Size 1	Size 2	Size 3	Size 4
Body and connections type	Zinc alloy body, Zinc alloy integrated connections Technopolymer body, metal connections	Aluminium body, integrated aluminium connections		
Protection and bowl type	Technopolymer protection - PA bowl (Size 1 available without protection)			Metal bowl with blind metal bowl
IN / OUT connections	G1/8” - G1/4”	G1/4” - G3/8”	G3/8” - G1/2”, G3/4”	G1”
Assembly configuration	Stand alone Panel mounted with M4 screws	Stand alone Panel mounted with M5 screws	Stand alone Panel mounted with M6 screws	Stand alone Panel mounted with M8 screws
Assembly position	Vertical ±5°			
Filter pore size (μm)	5 / 20 / 50			
Bowl capacity (cm³)	20	30	48	178
Condensation drain	Semi-automatic Automatic			
Max. fittings torque IN / OUT connections	G1/8” metal: 15 G1/4” metal: 20	G1/4” metal: 20 G3/8” metal: 25	G3/8” metal: 25 G1/2” metal: 30 G3/4” metal: 35	G1”metal: 35

Operational characteristics	Size							
	Size 1	Size 2	Size 3	Size 4	Size 1	Size 2	Size 3	Size 4
	Semi-automatic condensation drain				Automatic condensation drain			
Maximum working pressure (bar)	13				10			
Minimum working pressure (bar)	0,5							
Working temperature (°C)	-5 ÷ +50							

Weights	Size			
	Size 1	Size 2	Size 3	Size 4
Zinc alloy body version (g)	218	/	/	/
Technopolymer body version (g)	103	/	/	/
Aluminium body version (g)	/	255	405	1700

Overall dimensions and technical information are provided solely for informative purpose and may be modified without notice.

Order codes

17 | 301A | . | A | . | S

Size, body and connections
001A : Zinc alloy body, connections G1/8” (only for size 1)
001B : Zinc alloy body, connections G1/4” (only for size 1)
101A : Technopolymer body, connections G1/8” (only for size 1)
101B : Technopolymer body, connections G1/4” (only for size 1)
201A : Aluminium body, connections G1/4” (only for size 2)
201B : Aluminium body, connections G3/8” (only for size 2)
301A : Aluminium body, connections G3/8” (only for size 3)
301B : Aluminium body, connections G1/2” (only for size 3)
301E : Aluminium body, connections G3/4” (only for size 3)
401B : Aluminium body, connections G1” (only for size 4)

Filter pore size
A : 5 μm
B : 20 μm
C : 50 μm

Type
P : Bowl protection (only for size 1)
S : Automatic drain (for all sizes)
PS : Bowl protection and automatic drain (only for size 1)

Example: 17301A.A.S
Size 3 filter, aluminium body, G3/8” connections, filter pore size5 μm, automatic drain

Dimensions

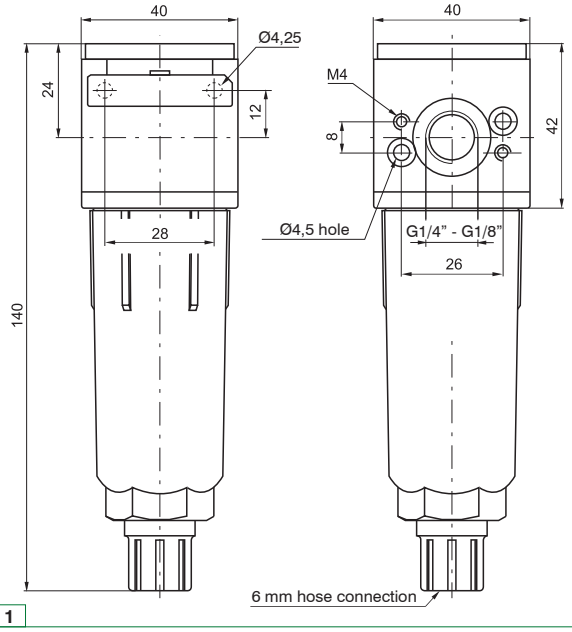

Size 1

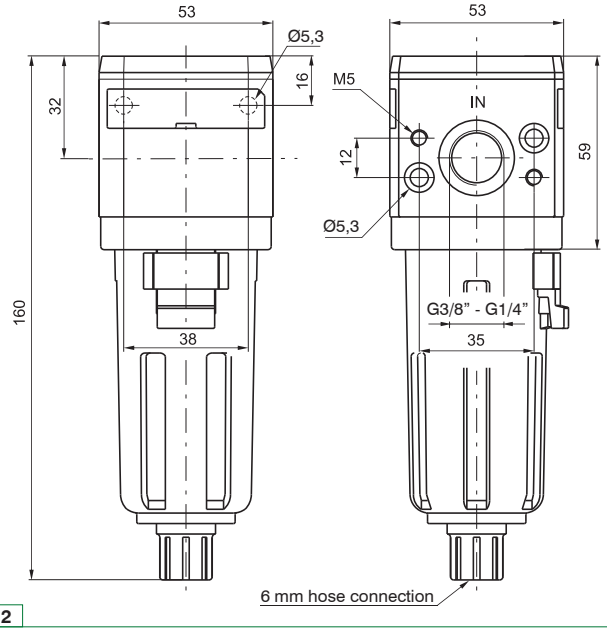

Size 2

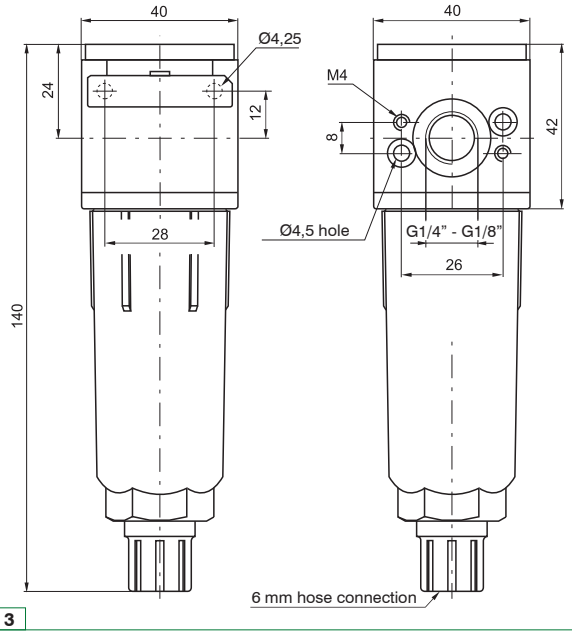

Size 3

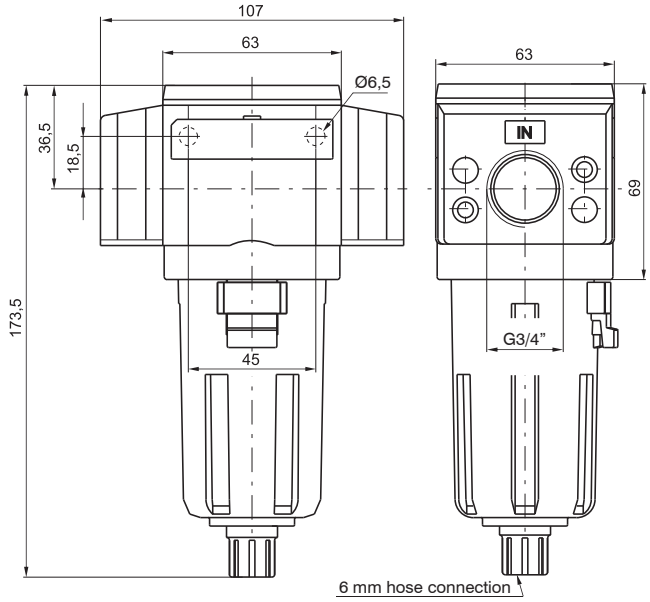

Size 3 3/4"

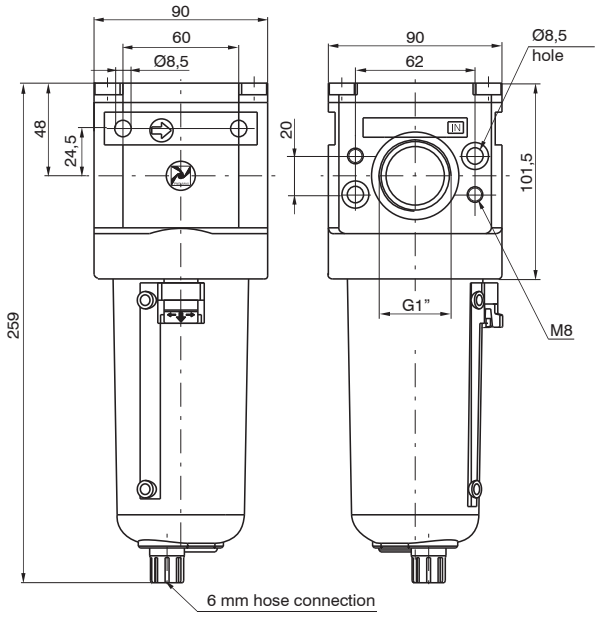

Size 4

Overall dimensions and technical information are provided solely for informative purpose and may be modified without notice.

Characteristic curves

Flow rate curves

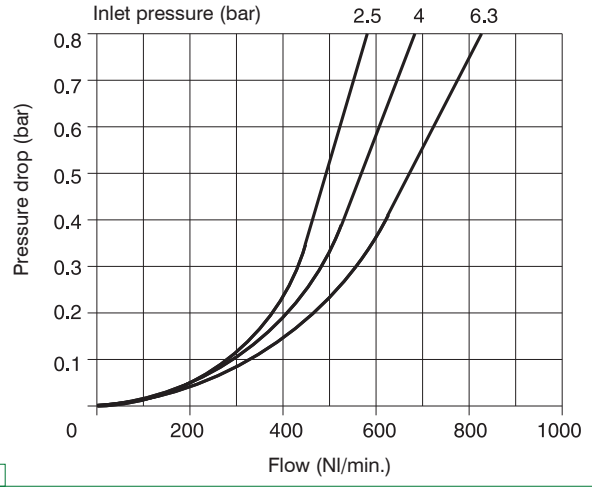

Size 1

Flow rate curves

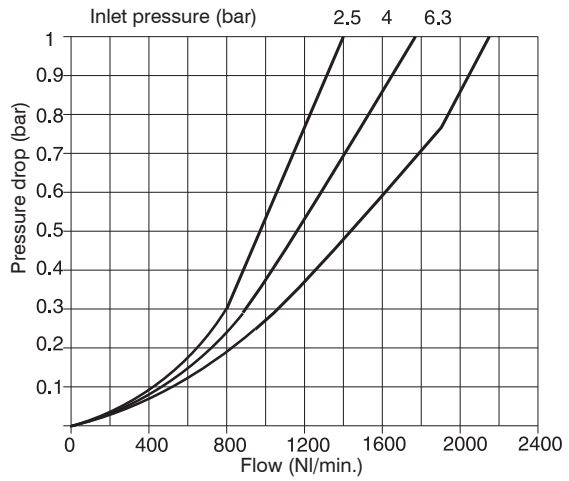

Size 2

Flow rate curves

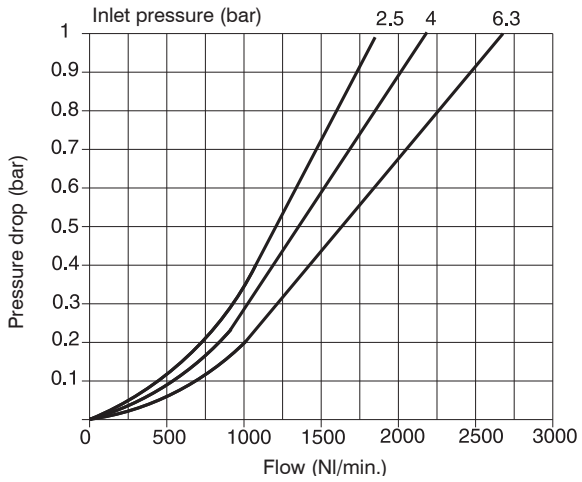

Size 3

Flow rate curves

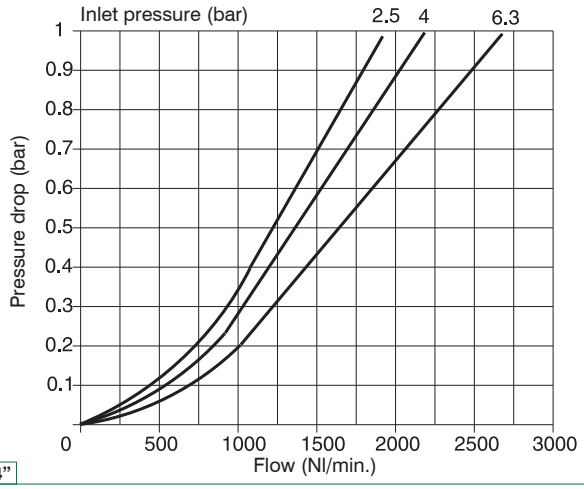

Size 3 3/4”

Flow rate curves

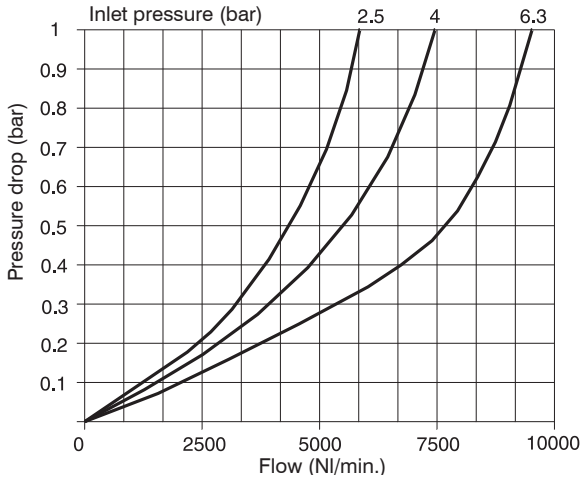

Size 4

Coalescing filters

- Coalescing filter
- Available in 4 sizes with flow rates up to 3000 Nl/min and connections from 1/8” to 1”
- Filtering cartridge with filtration grade of 0,01 μm
- Filtering performances 99.97% (particles up to 0.01 μm)
- Bowls screwed to the body (Size 1)
- Bowl assembly via bayonet type quick coupling mechanism with safety button (Size 2 - Size 3 - Size 4)
- Semi-automatic or automatic drain
- Atex certification (II 2GD o II 3GD) on request

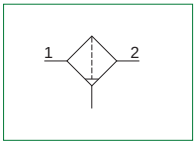

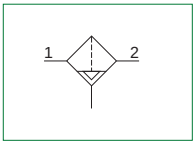

Note
In order to ensure the high level of filtration, it is recommended that a 5μ filter is installed before the coalescing filter. In order to ensure that any fluid discharged by the auto drain assembly is adequately drained away, it is recommended you use a 6mm fitting and tube.

Technical characteristics	Size			
	Size 1	Size 2	Size 3	Size 4
Body and connections type	Zinc alloy body, Zinc alloy integrated connections Technopolymer body, metal connections	Aluminium body, integrated aluminium connections		
Protection and bowl type	Technopolymer protection - PA bowl (Size 1 available without protection)			Metal bowl with blind metal bowl
IN / OUT connections	G1/8” - G1/4”	G1/4” - G3/8”	G3/8” - G1/2”, G3/4”	G1”
Assembly configuration	Stand alone Panel mounted with M4 screws	Stand alone Panel mounted with M5 screws	Stand alone Panel mounted with M6 screws	Stand alone Panel mounted with M8 screws
Assembly position	Vertical ±5°			
Filter pore size (μm)	0,01, efficiency of 99,97%			
Bowl capacity (cm³)	20	30	48	178
Condensation drain	Semi-automatic Automatic			
Max. fittings torque IN / OUT connections	G1/8” metal: 15 G1/4” metal: 20	G1/4” metal: 20 G3/8” metal: 25	G3/8” metal: 25 G1/2” metal: 30 G3/4” metal: 35	G1”metal: 35

Operational characteristics	Size							
	Size 1	Size 2	Size 3	Size 4	Size 1	Size 2	Size 3	Size 4
	Semi-automatic condensation drain				Automatic condensation drain			
Maximum working pressure (bar)	13				10			
Minimum working pressure (bar)	0,5							
Working temperature (°C)	-5 ÷ +50							

Weights	Size			
	Size 1	Size 2	Size 3	Size 4
Zinc alloy body version (g)	225	/	/	/
Technopolymer body version (g)	110	/	/	/
Aluminium body version (g)	/	255	405	1700

Overall dimensions and technical information are provided solely for informative purpose and may be modified without notice.

Order codes

17 **308A** . **E** . **S**

Size, body and connections
008A : Zinc alloy body, connections G1/8” (only for size 1)
008B : Zinc alloy body, connections G1/4” (only for size 1)
108A : Technopolymer body, connections G1/8” (only for size 1)
108B : Technopolymer body, connections G1/4” (only for size 1)
208A : Aluminium body, connections G1/4” (only for size 2)
208B : Aluminium body, connections G3/8” (only for size 2)
308A : Aluminium body, connections G3/8” (only for size 3)
308B : Aluminium body, connections G1/2” (only for size 3)
308E : Aluminium body, connections G3/4” (only for size 3)
408B : Aluminium body, connections G1” (only for size 4)

Filter efficiency
E : 0,01 μm, efficiency of 99,97%

Type
P : Bowl protection (only for size 1)
S : Automatic drain (for all sizes)
PS : Bowl protection and automatic drain (only for size 1)

Example: 17308A.E.S
Size 3 coalescing filter, aluminium body, G3/8” connections, filter efficiency of 99,97%, automatic drain

Dimensions

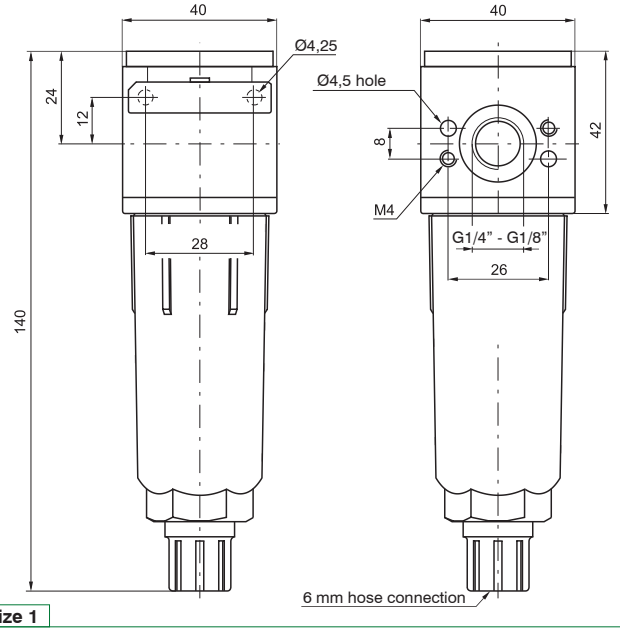

Size 1

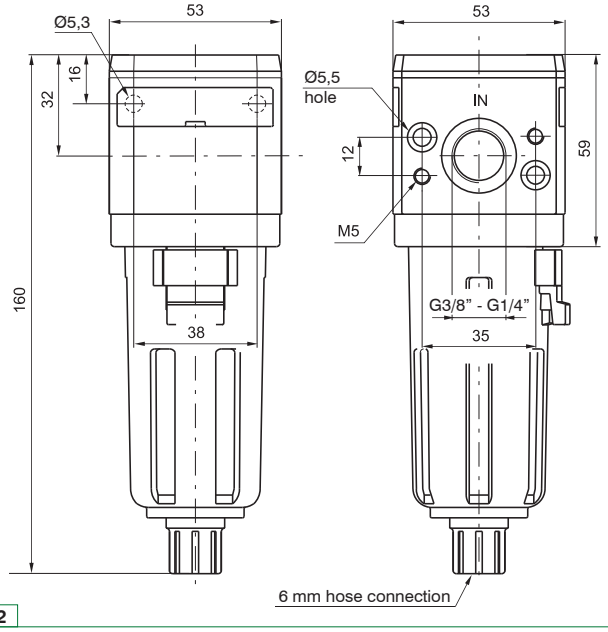

Size 2

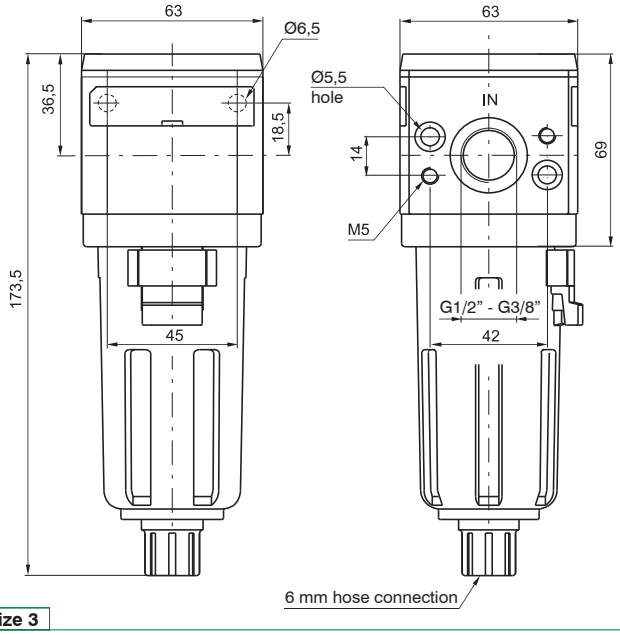

Size 3

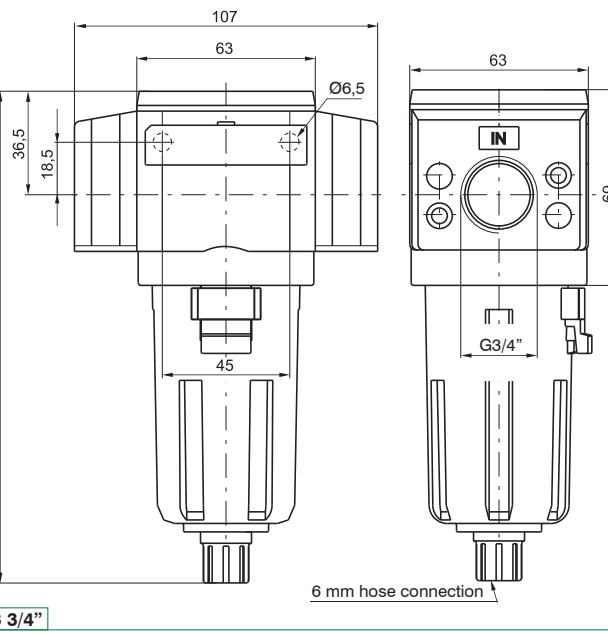

Size 3 3/4"

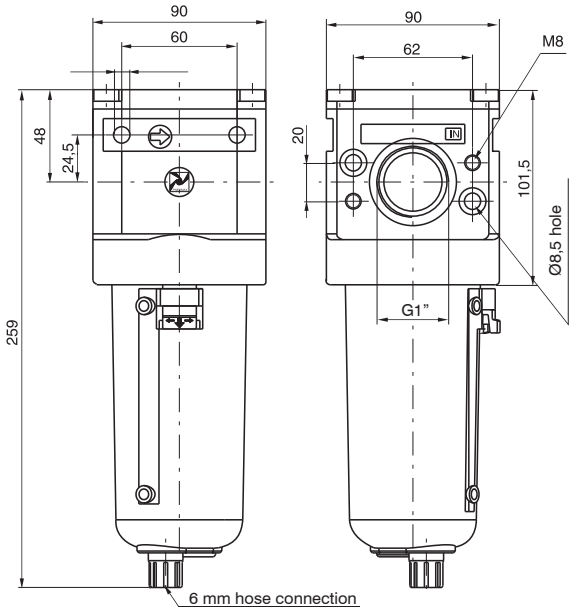

Size 4

Overall dimensions and technical information are provided solely for informative purpose and may be modified without notice.

Characteristic curves

Flow rate curves

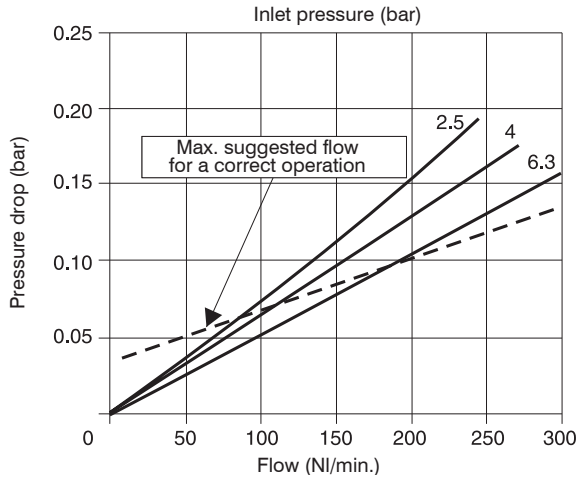

Size 1

Flow rate curves

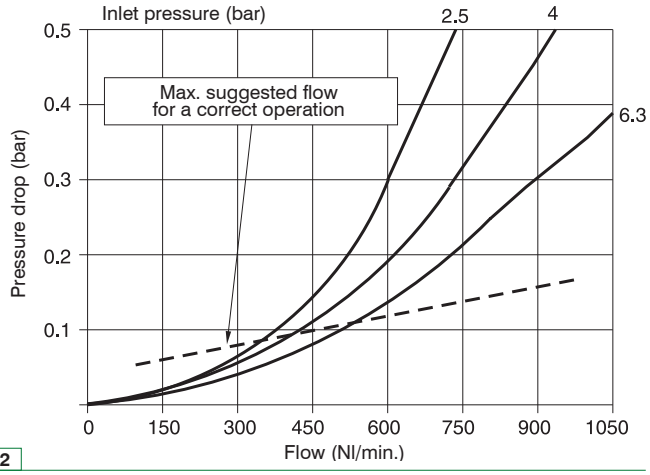

Size 2

Flow rate curves

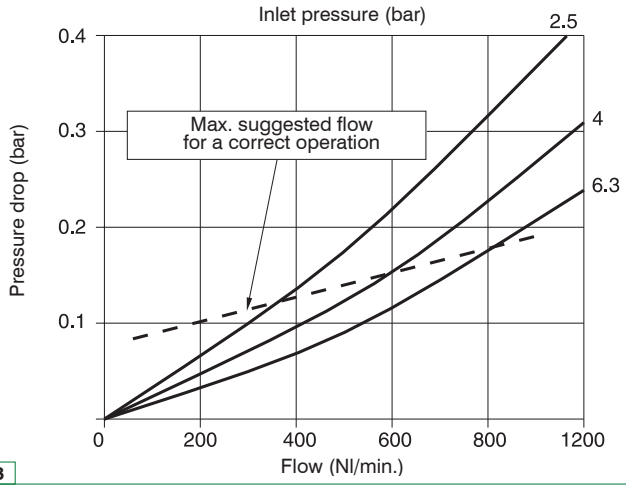

Size 3

Flow rate curves

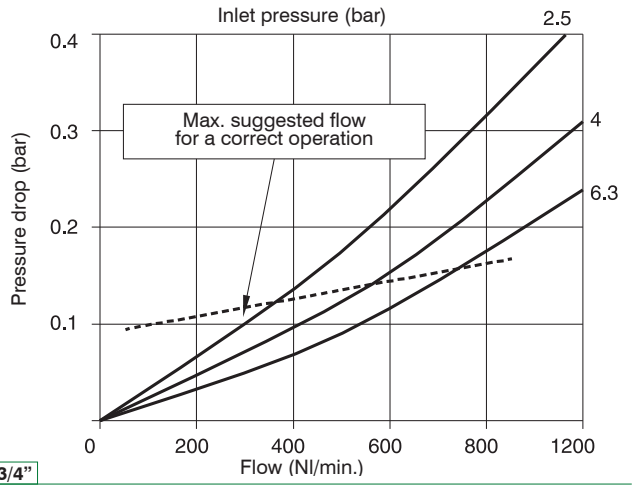

Size 3 3/4"

Flow rate curves

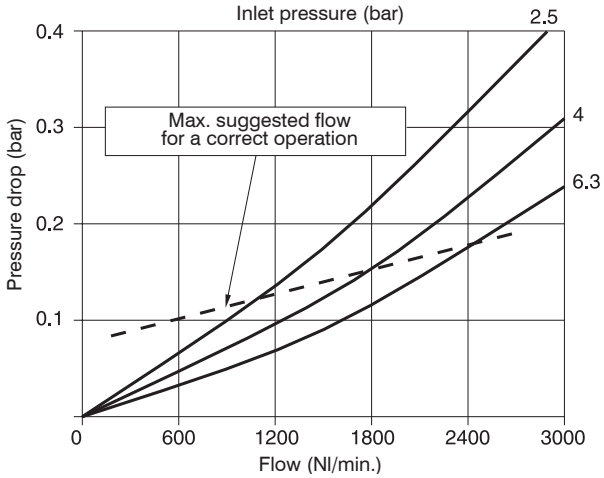

Size 4

Dynamic drier

- Aluminium body
- Wall mounting possibility with M8 screws
- Filtering cartridge made of HDPE available in three different filtration grades (5µm, 20µm, 50µm)
- Filter cartridge can be regenerated by washing / blowing it or replaced
- With blind metal bowl
- Bowl assembly via bayonet type quick coupling mechanism with safety button
- Automatic condensation drain

Technical characteristics	Size
	Size 4
Body and connections type	Aluminium body with integrated aluminium connections
Protection and bowl type	Metal bowl with blind metal bowl
IN / OUT connections	G1”
Assembly configuration	Stand alone Panel mounted with M8 screws
Assembly position	Vertical ±5°
Filter pore size (µm)	5 / 20 / 50
Filter efficiency at flow rate 1500 Nl/min	96,00%
Bowl capacity (cm³)	160
Condensation drain	Automatic
Max. fittings torque IN / OUT connections	G1”metal: 35

Operational characteristics	Size
	Size 4
	Automatic condensation drain
Maximum working pressure (bar)	13
Minimum working pressure (bar)	0,5
Nominal flow rate at 6 bar with Δp=1 (Nl/min)	2500
Working temperature (°C)	-5 ÷ +50

Weights	Size
	Size 4
Aluminium body version (g)	1700

Overall dimensions and technical information are provided solely for informative purpose and may be modified without notice.

Order codes

17 **40EB** . **A** . **S**

Size, body and connections
40EB : Aluminium body, connections G1” (only for size 4)

Filter pore size
A : 5 μm
B : 20 μm
C : 50 μm

Example: 1740EB.A.S
Dynamic direr Size 4, aluminium body, G1” connections, filter pore size 5 μm

Dimensions

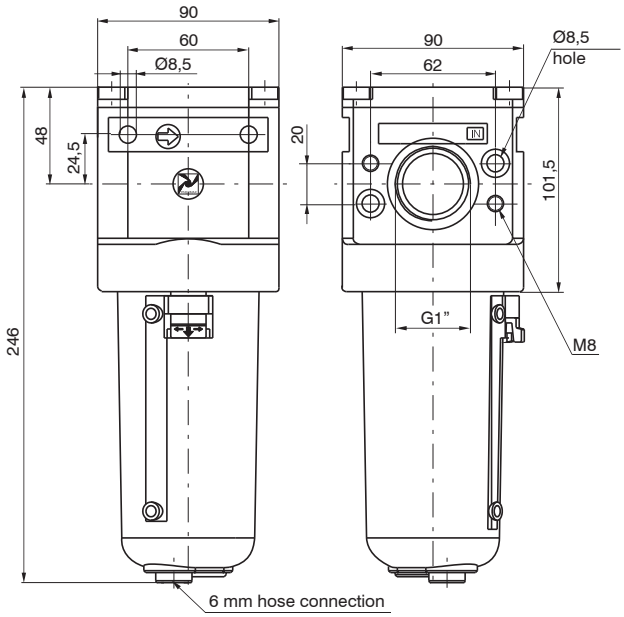

Size 4

Filter regulators

- Filter - diaphragm pressure regulator with relieving
- Available in 3 sizes with flow rates up to 3500 Nl/min and connections from 1/8” to 3/4”
- Low histeresis rolling diaphragm and balanced spool
- Filtering element made of HDPE available in 3 different filtration grades (5μm, 20μm and 50μm)
- Bowls screwed to the body (Size 1)
- Bowl assembly via bayonet type quick coupling mechanism with safety button (Size 2 - Size 3)
- Semi-automatic or automatic drain
- Available in four pressure ranges up to 12 bar
- Fitted with panel mounting locking ring
- Atex certification (II 2GD o II 3GD) on request

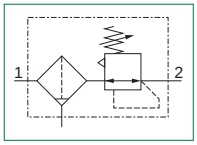

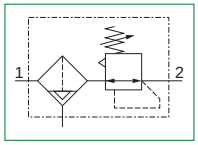

Note
For installations where a more accurate and constant pressure is required, the unit should be installed as close as possible to the point of use. In order to ensure that any fluid discharged by the auto drain assembly is adequately drained away, it is recommended you to use a 6mm fitting and tube.

Technical characteristics	Size		
	Size 1	Size 2	Size 3
Body and connections type	Zinc alloy body, Zinc alloy integrated connections Technopolymer body, metal connections	Aluminium body, integrated aluminium connections	
Protection and bowl type	Technopolymer protection - PA bowl (Size 1 available without protection)		
IN / OUT connections	G1/8” - G1/4”	G1/4” - G3/8”	G3/8” - G1/2”, G3/4”
Assembly configuration	Stand alone Panel mounting Panel mounted with M4 screws With fixing bracket	Stand alone Panel mounting Panel mounted with M5 screws With fixing bracket	Stand alone Panel mounting Panel mounted with M6 screws With fixing bracket
Assembly position	Vertical ±5°		
Filter pore size (μm)	5 / 20 / 50		
Pressure range (bar)	0 - 2 / 0 - 4 / 0 - 8 / 0 - 12		
Bowl capacity (cm³)	20	30	48
Condensation drain	Semi-automatic Automatic		
Regulation	Manual push and lock with pressure Manual lockable with accessories		
Pressure measurement	G1/8” Pressure gauge connection port		
Max. fittings torque IN / OUT connections	G1/8” metal: 15 G1/4” metal: 20	G1/4” metal: 20 G3/8” metal: 25	G3/8” metal: 25 G1/2” metal: 30 G3/4” metal: 35

Operational characteristics	Size					
	Size 1	Size 2	Size 3	Size 1	Size 2	Size 3
	Semi-automatic condensation drain			Automatic condensation drain		
Maximum working pressure (bar)	13			10		
Minimum working pressure (bar)	0,5					
Working temperature (°C)	-5 ÷ +50					

Weights	Size		
	Size 1	Size 2	Size 3
Zinc alloy body version (g)	295	/	/
Technopolymer body version (g)	180	/	/
Aluminium body version (g)	/	450	645

Overall dimensions and technical information are provided solely for informative purpose and may be modified without notice.

Order codes

17 | 304A | . | B | . | D | . | S | . | K

Size, body and connections
004A : Zinc alloy body, connections G1/8” (only for size 1)
004B : Zinc alloy body, connections G1/4” (only for size 1)
104A : Technopolymer body, connections G1/8” (only for size 1)
104B : Technopolymer body, connections G1/4” (only for size 1)
204A : Aluminium body, connections G1/4” (only for size 2)
204B : Aluminium body, connections G3/8” (only for size 2)
304A : Aluminium body, connections G3/8” (only for size 3)
304B : Aluminium body, connections G1/2” (only for size 3)
304E : Aluminium body, connections G3/4” (only for size 3)

Filter pore size
A : 5 μm
B : 20 μm
C : 50 μm

Pressure range
A : 0 - 2 bar
B : 0 - 4 bar
C : 0 - 8 bar
D : 0 - 12 bar

Type
P : Bowl protection (only for size 1)
S : Automatic drain (for all sizes)
PS : Bowl protection and automatic drain (only for size 1)

Options
: Standard
K : Lockable version
U : Lockable version with universal key

Example: 17304A.B.D.S.K
Filter regulator size 3, aluminium body, G3/8” connections, filter pore size 20 μm 0 - 12 bar, automatic drain lockable version

Dimensions

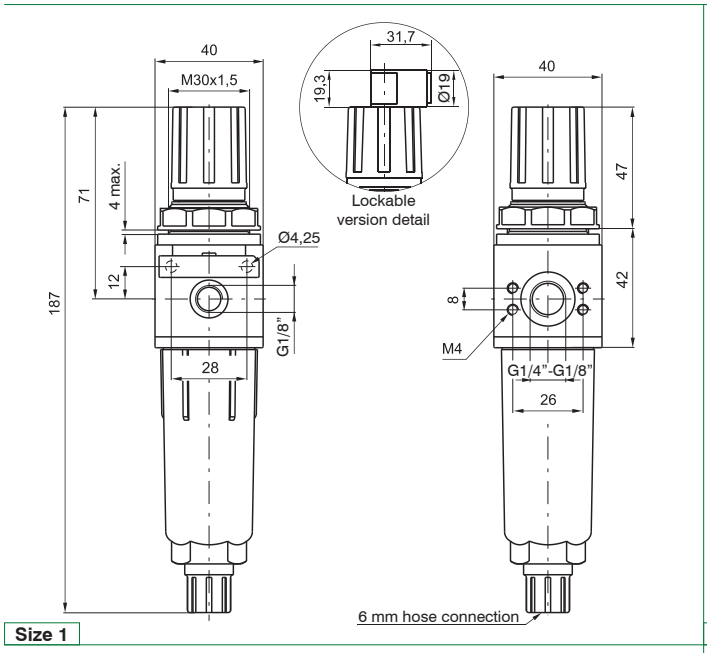

Size 1

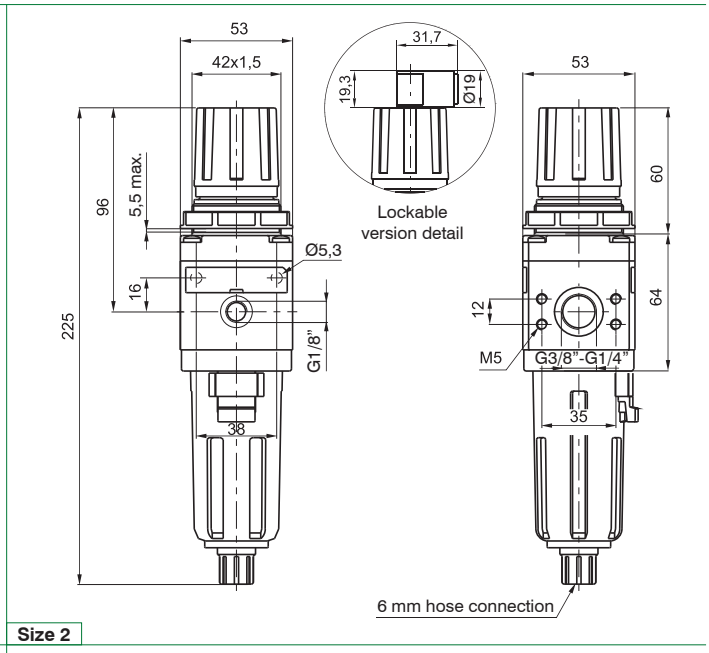

Size 2

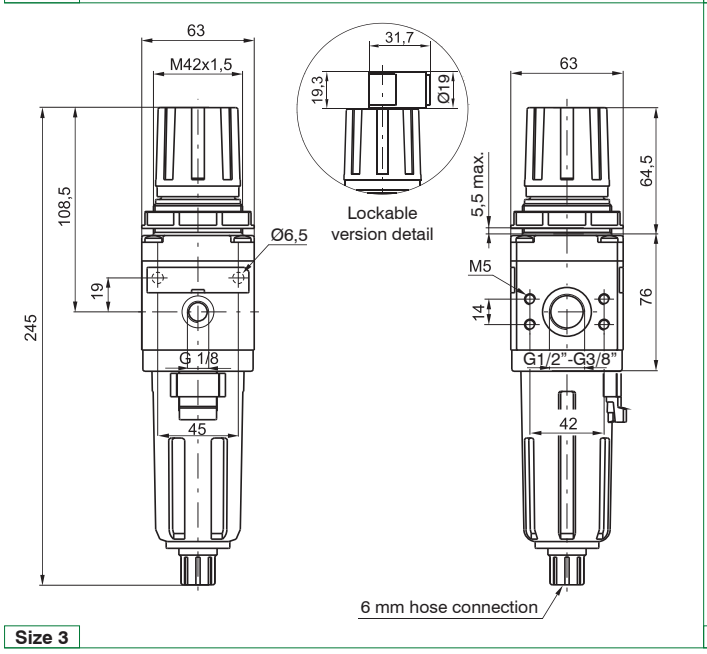

Size 3

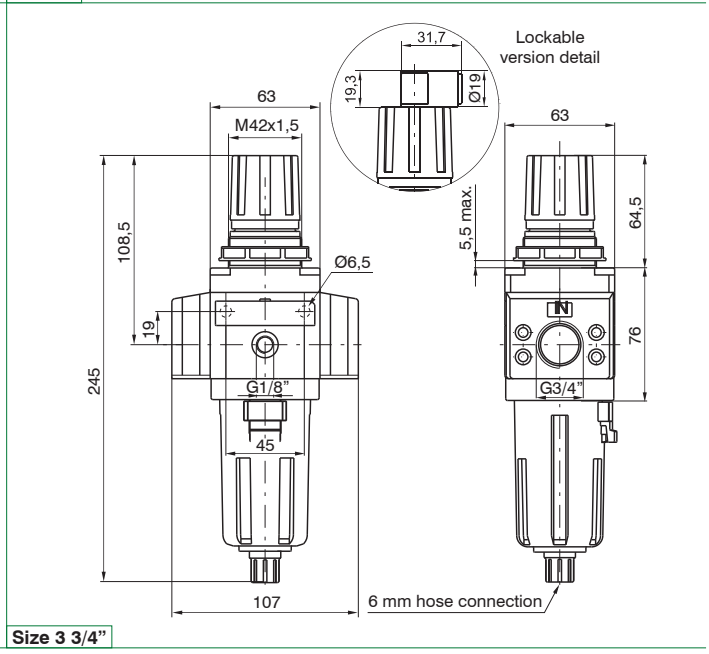

Size 3 3/4"

Overall dimensions and technical information are provided solely for informative purpose and may be modified without notice.

Characteristic curves

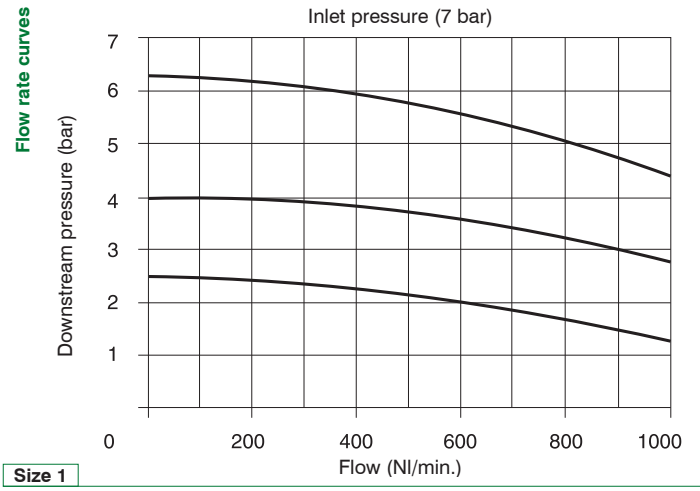

Size 1

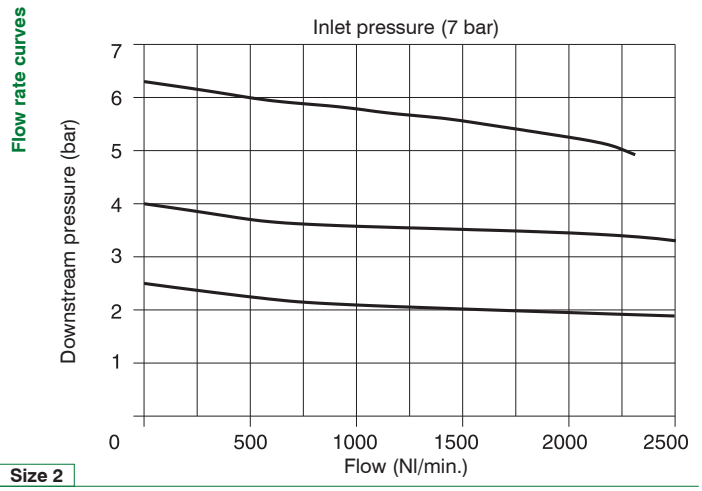

Size 2

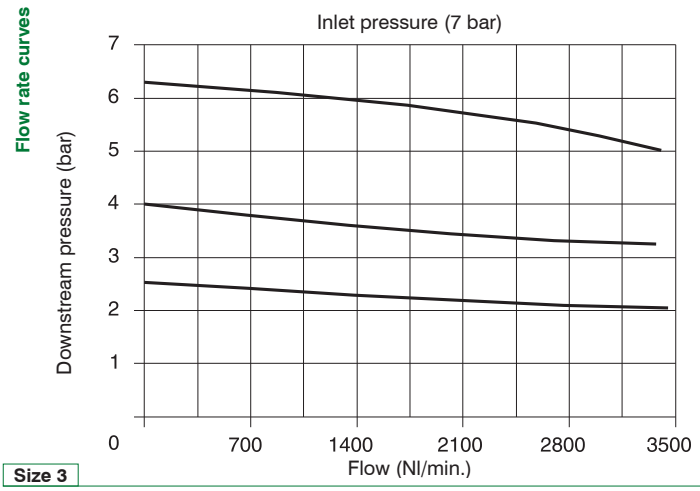

Size 3

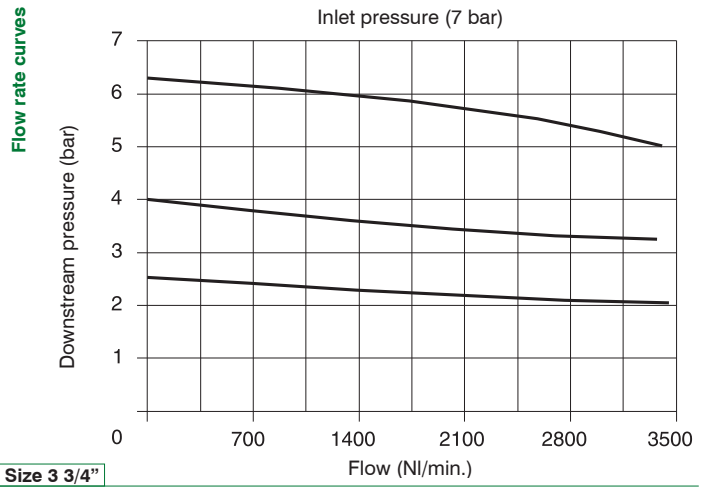

Size 3 3/4”

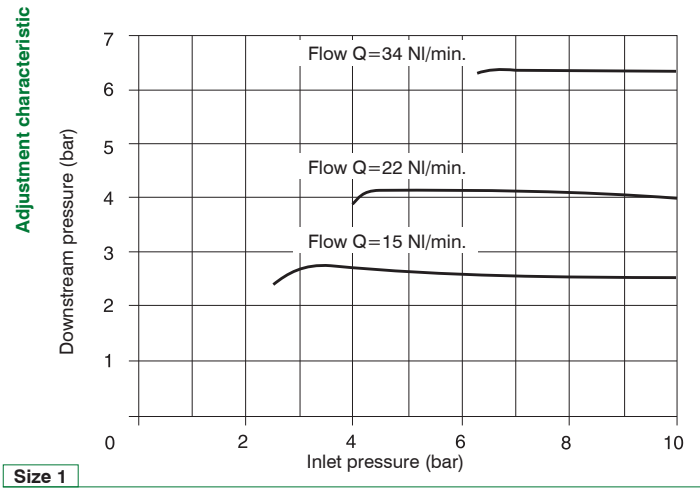

Size 1

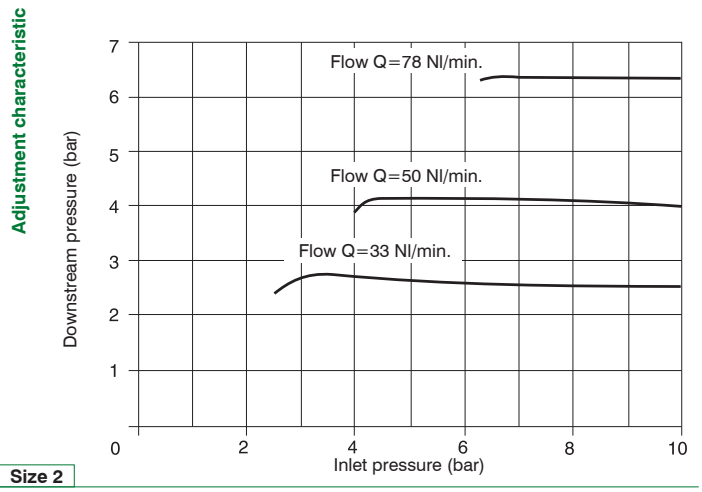

Size 2

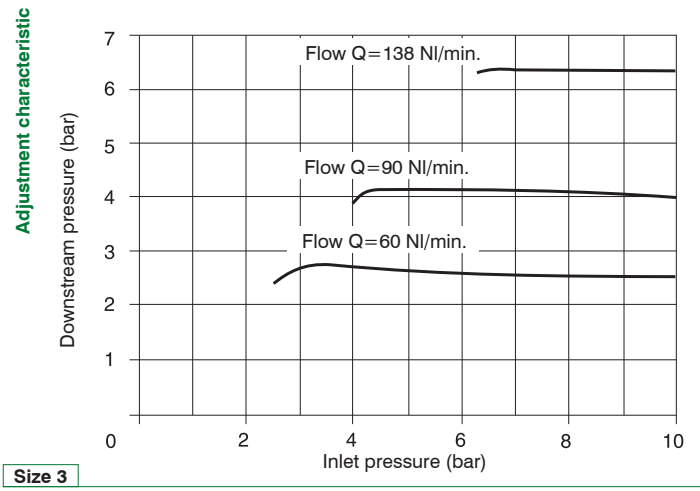

Size 3

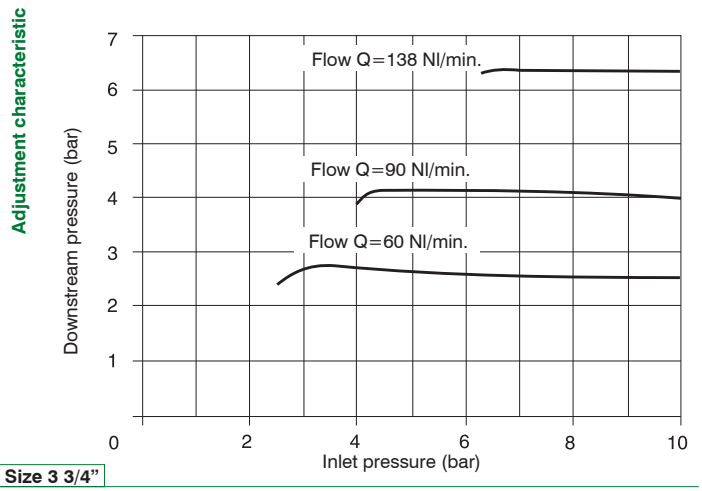

Size 3 3/4”

Overall dimensions and technical information are provided solely for informative purpose and may be modified without notice.

Regulators

- Diaphragm pressure regulator with relieving
- Available in 4 sizes with flow rates up to 8000 Nl/min and connections from 1/8” to 1”
- Low histeresis rolling diaphragm and balanced spool
- Available in four pressure ranges up to 12 bar
- Fitted with panel mounting locking ring
- High flow rate of the discharge valve for the dowstream overpressure (Size 4)
- Atex certification (II 2GD o II 3GD) on request

Note
For installations where a more accurate and constant pressure is required, the unit should be installed as close as possible to the point of use.

Technical characteristics	Size			
	Size 1	Size 2	Size 3	Size 4
Body and connections type	Zinc alloy body, Zinc alloy integrated connections Technopolymer body, metal connections	Aluminium body, integrated aluminium connections		
IN / OUT connections	G1/8” - G1/4”	G1/4” - G3/8”	G3/8” - G1/2”, G3/4”	G1”
Assembly configuration	Stand alone Panel mounting Panel mounted with M4 screws With fixing bracket	Stand alone Panel mounting Panel mounted with M5 screws With fixing bracket	Stand alone Panel mounting Panel mounted with M6 screws With fixing bracket	Stand alone Panel mounting Panel mounted with M8 screws
Assembly position	Indifferent			
Pressure range (bar)	0 - 2 / 0 - 4 / 0 - 8 / 0 - 12			
Regulation	Manual push and lock with pressure Manual lockable with accessories			
Pressure measurement	G1/8” Pressure gauge connection port			
Max. fittings torque IN / OUT connections	G1/8” metal: 15 G1/4” metal: 20	G1/4” metal: 20 G3/8” metal: 25	G3/8” metal: 25 G1/2” metal: 30 G3/4” metal: 35	G1” metal: 35

Operational characteristics	Size			
	Size 1	Size 2	Size 3	Size 4
Maximum working pressure (bar)	13			
Minimum working pressure (bar)	0,5			
Working temperature (°C)	-5 ÷ +50			

Weights	Size			
	Size 1	Size 2	Size 3	Size 4
Zinc alloy body version (g)	250	/	/	/
Technopolymer body version (g)	135	/	/	/
Aluminium body version (g)	/	390	550	1900

Overall dimensions and technical information are provided solely for informative purpose and may be modified without notice.

Order codes

17 | 302A | . | D | . | L | . | K

Size, body and connections
002A : Zinc alloy body, connections G1/8” (only for size 1)
002B : Zinc alloy body, connections G1/4” (only for size 1)
102A : Technopolymer body, connections G1/8” (only for size 1)
102B : Technopolymer body, connections G1/4” (only for size 1)
202A : Aluminium body, connections G1/4” (only for size 2)
202B : Aluminium body, connections G3/8” (only for size 2)
302A : Aluminium body, connections G3/8” (only for size 3)
302B : Aluminium body, connections G1/2” (only for size 3)
302E : Aluminium body, connections G3/4” (only for size 3)
402NB : Aluminium body, connections G1” (only for size 4)

Pressure range
A : 0 - 2 bar
B : 0 - 4 bar
C : 0 - 8 bar
D : 0 - 12 bar

Type
L : Without relieving
SM : Improved relieving (not available for Size 4)

Options
: Standard
K : Lockable version
U : Lockable version with universal key

Example: 17302A.D.L.K
Regulator size 3, body in light aluminium alloy, G3/8”connections, 0 - 12 bar, without relieving, lockable version

Dimensions

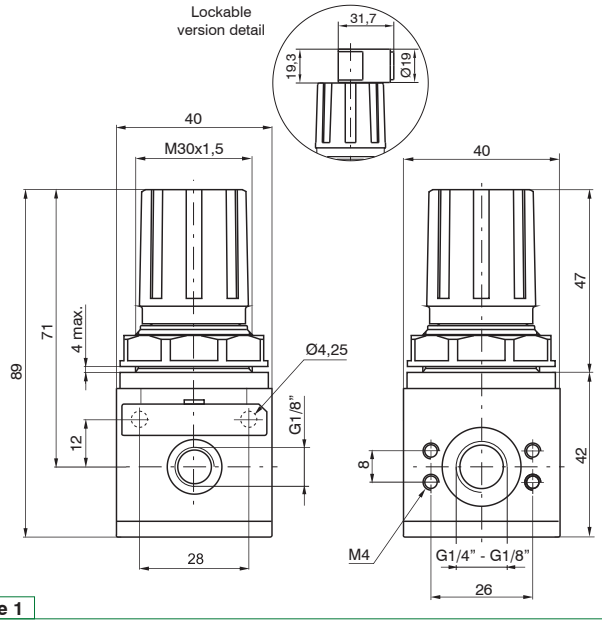

Size 1

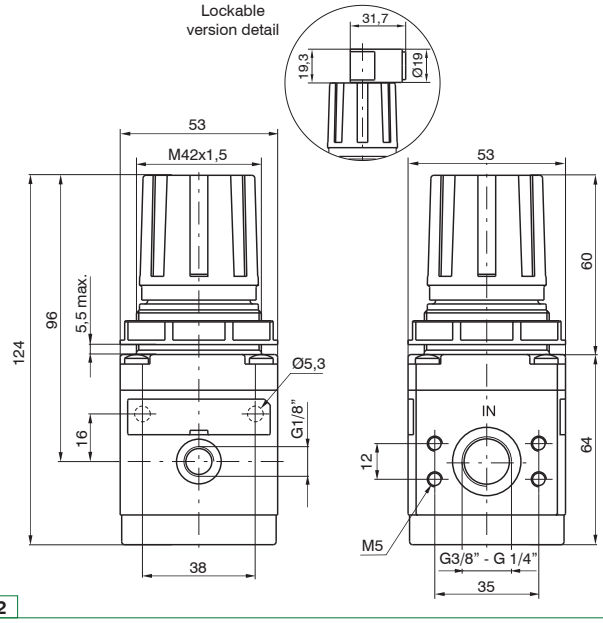

Size 2

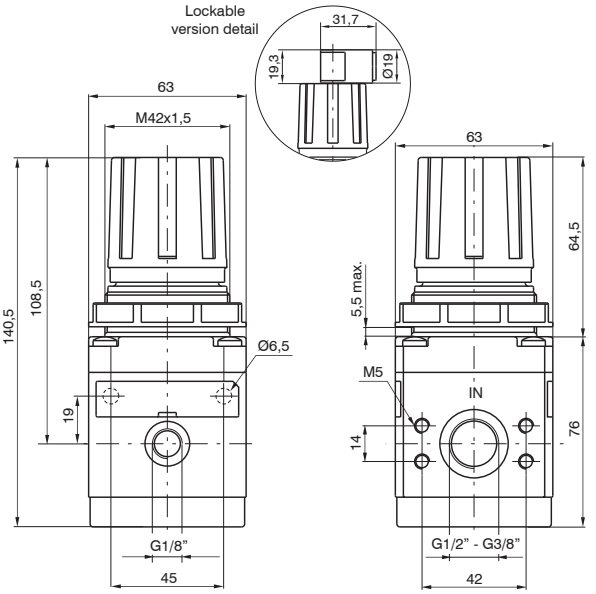

Size 3

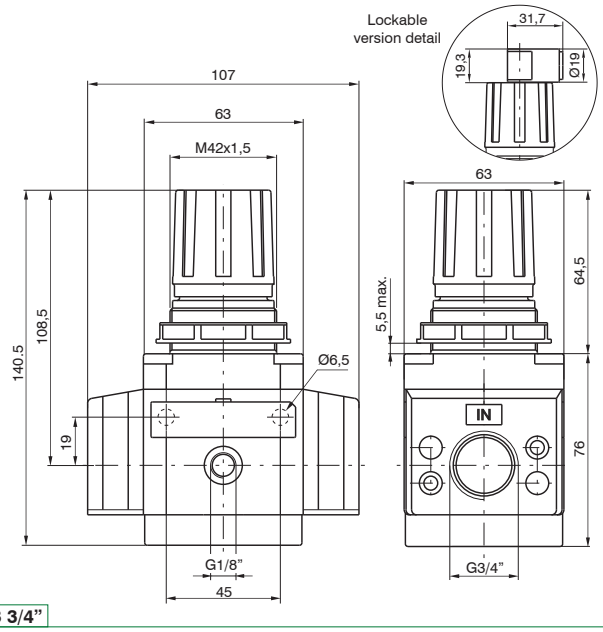

Size 3 3/4"

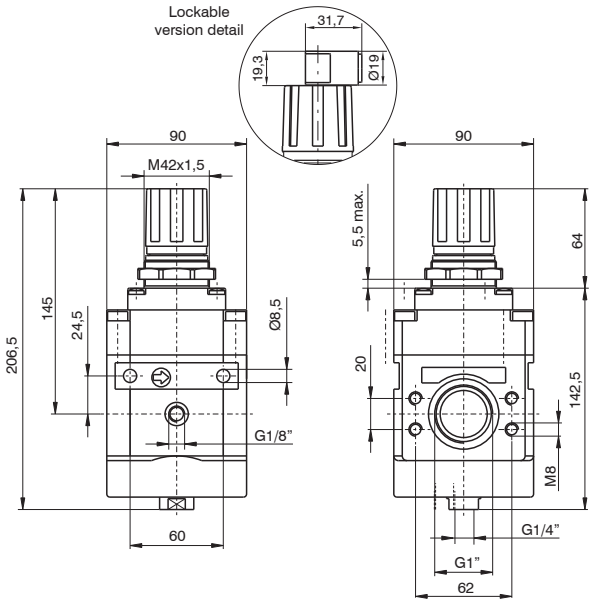

Size 4

Overall dimensions and technical information are provided solely for informative purpose and may be modified without notice.

Characteristic curves

Flow rate curves

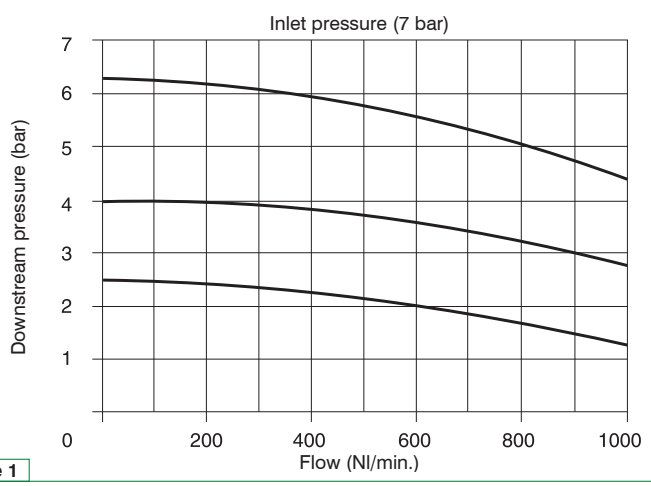

Size 1

Flow rate curves

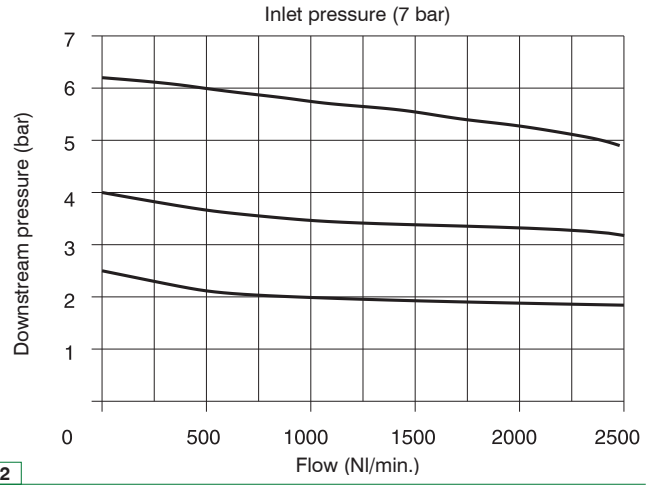

Size 2

Flow rate curves

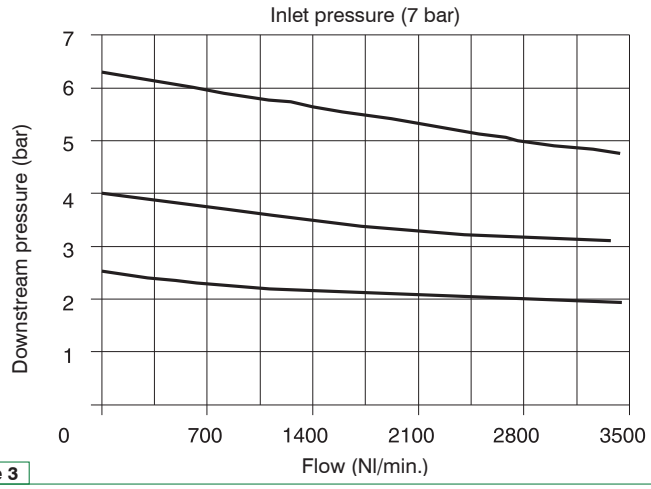

Size 3

Flow rate curves

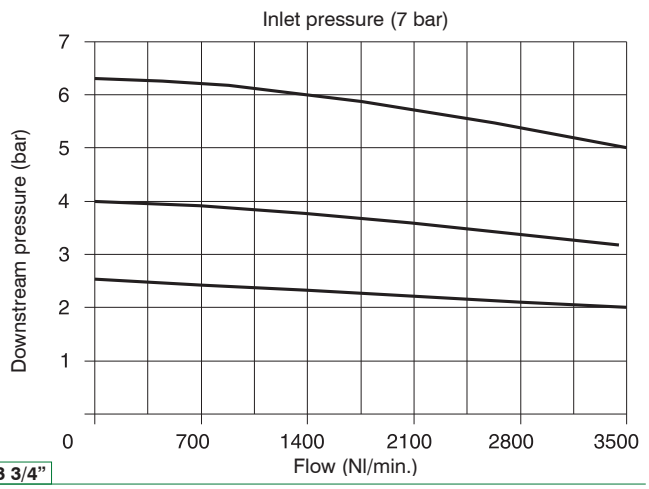

Size 3 3/4”

Flow rate curves

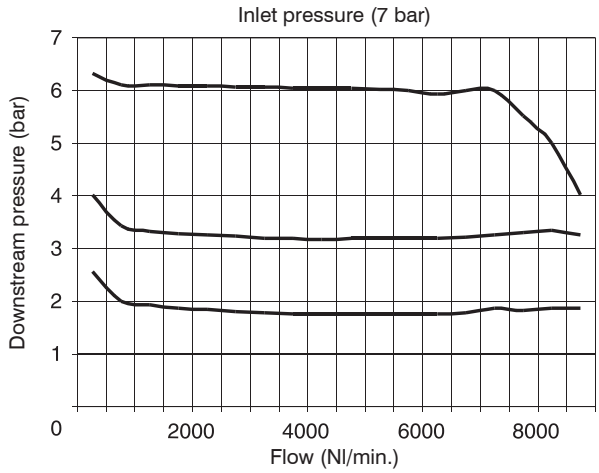

Size 4

Adjustment characteristic

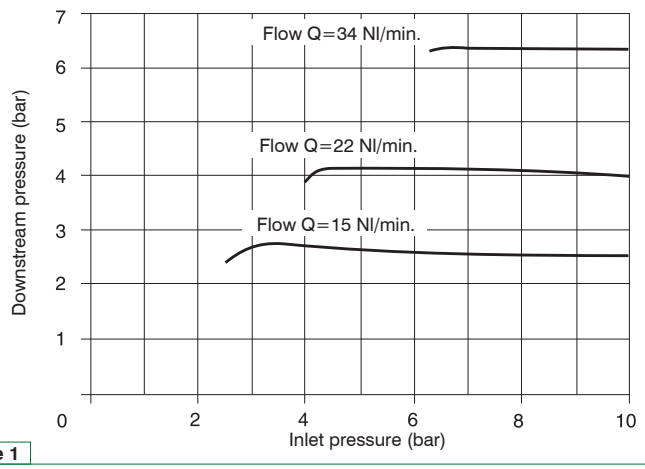

Size 1

Adjustment characteristic

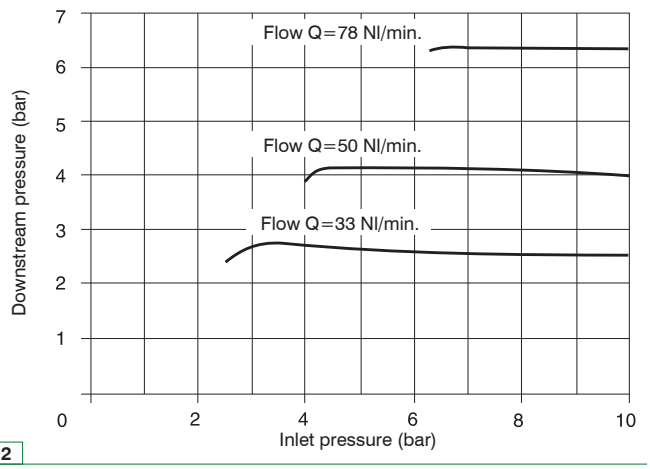

Size 2

Adjustment characteristic

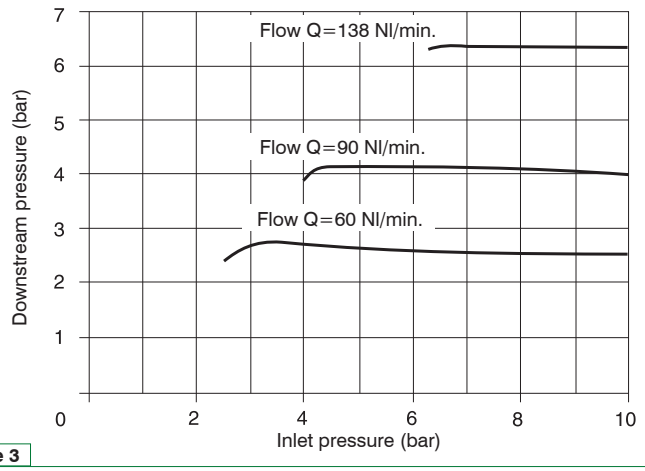

Size 3

Adjustment characteristic

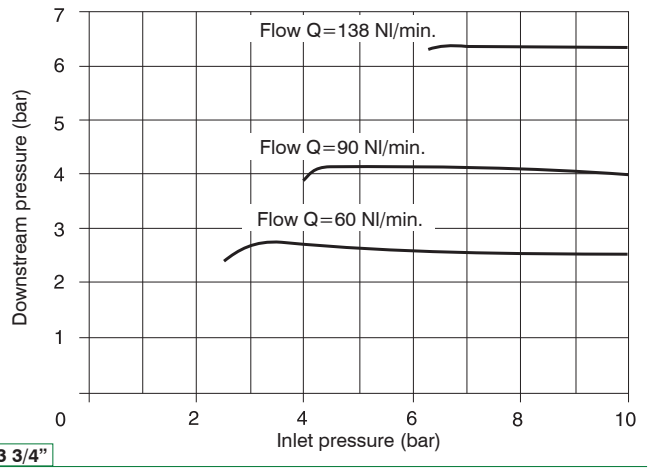

Size 3 3/4”

Adjustment characteristic

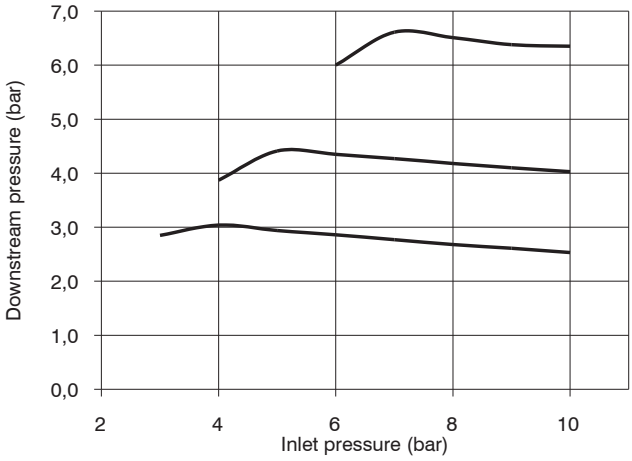

Size 4

Overall dimensions and technical information are provided solely for informative purpose and may be modified without notice.

Regulators with integrated pressure gauge

- Diaphragm pressure regulator with relieving
- Available in 4 sizes with flow rates up to 3500 Nl/min and connections from 1/8” to 1/2”
- Low histeresis rolling diaphragm and balanced spool
- Available in four pressure ranges up to 12 bar
- Fitted with panel mounting locking ring
- Pressure gauge included on the top of adjusting knob
- Atex certification (II 2GD o II 3GD) on request

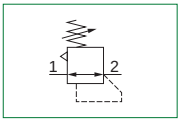

Note
For installations where a more accurate and constant pressure is required, the unit should be installed as close as possible to the point of use.

Technical characteristics	Size		
	Size 1	Size 2	Size 3
Body and connections type	Zinc alloy body, Zinc alloy integrated connections Technopolymer body, metal connections	Aluminium body, integrated aluminium connections	
IN / OUT connections	G1/8” - G1/4”	G1/4” - G3/8”	G3/8” - G1/2”
Assembly configuration	Stand alone Panel mounting Panel mounted with M4 screws With fixing bracket	Stand alone Panel mounting Panel mounted with M5 screws With fixing bracket	Stand alone Panel mounting Panel mounted with M6 screws With fixing bracket
Assembly position	Indifferent		
Pressure range (bar)	0 - 2 / 0 - 4 / 0 - 8 / 0 - 12		
Regulation	Manual push and lock with pressure		
Pressure measurement	G1/8” Pressure gauge connection port is included on the top of adjusting knob		
Max. fittings torque IN / OUT connections	G1/8” metal: 15 G1/4” metal: 20	G1/4” metal: 20 G3/8” metal: 25	G3/8” metal: 25 G1/2” metal: 30

Operational characteristics	Size		
	Size 1	Size 2	Size 3
Maximum working pressure (bar)	13		
Minimum working pressure (bar)	0,5		
Working temperature (°C)	-5 ÷ +50		

Weights	Size		
	Size 1	Size 2	Size 3
Zinc alloy body version (g)	380	/	/
Technopolymer body version (g)	250	/	/
Aluminium body version (g)	/	440	600

Overall dimensions and technical information are provided solely for informative purpose and may be modified without notice.

Order codes

17 | 322A | . | D

Size, body and connections
022A : Zinc alloy body, connections G1/8” (only for size 1)
022B : Zinc alloy body, connections G1/4” (only for size 1)
122A : Technopolymer body, connections G1/8” (only for size 1)
122B : Technopolymer body, connections G1/4” (only for size 1)
222A : Aluminium body, connections G1/4” (only for size 2)
222B : Aluminium body, connections G3/8” (only for size 2)
322A : Aluminium body, connections G3/8” (only for size 3)
322B : Aluminium body, connections G1/2” (only for size 3)

Pressure range
A : 0 - 2 bar
B : 0 - 4 bar
C : 0 - 8 bar
D : 0 - 12 bar

Example: 17322A.D
Size 3 regulator with integrated pressure gauge, Aluminium body, G3/8” connections, 0 - 12 bar

Dimensions

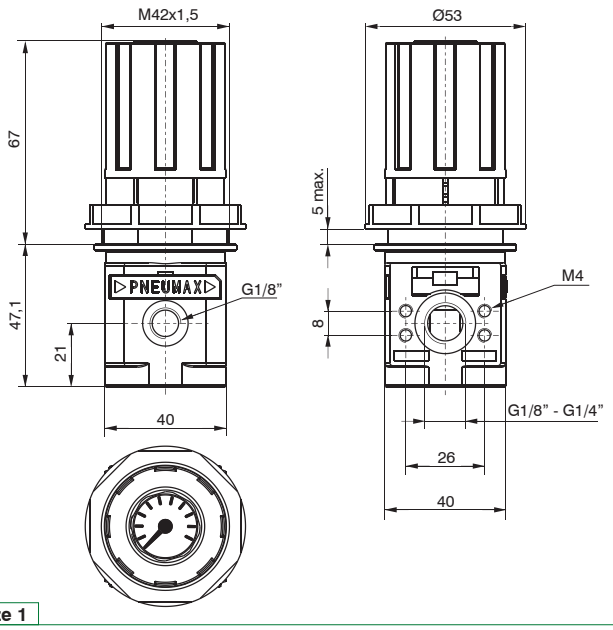

Size 1

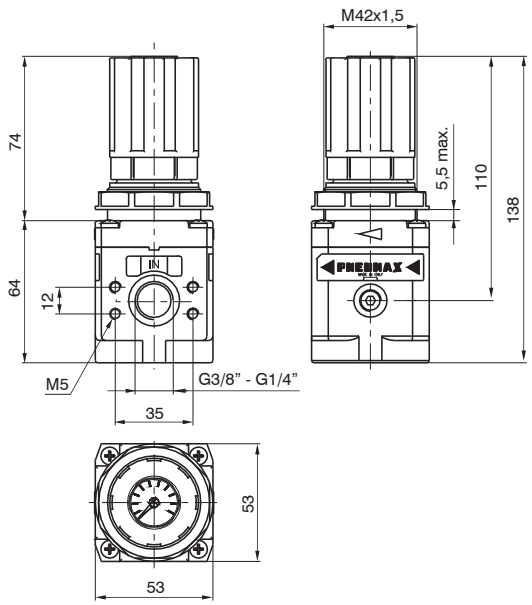

Size 2

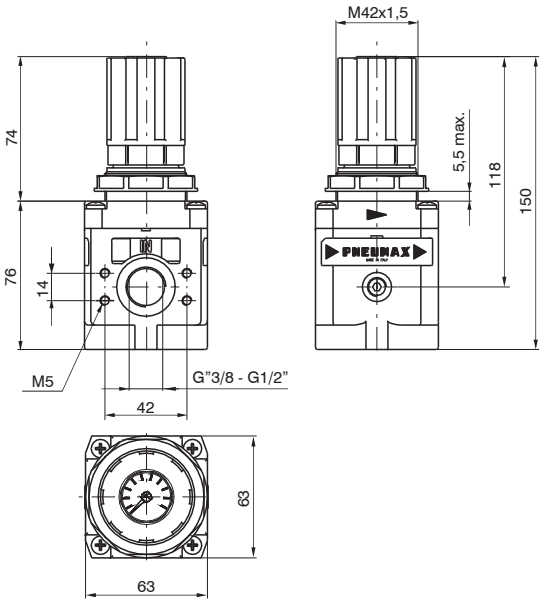

Size 3

Overall dimensions and technical information are provided solely for informative purpose and may be modified without notice.

Characteristic curves

Flow rate curves

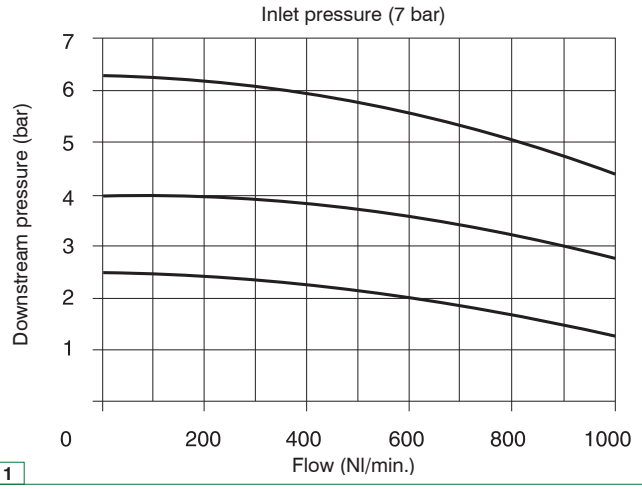

Size 1

Flow rate curves

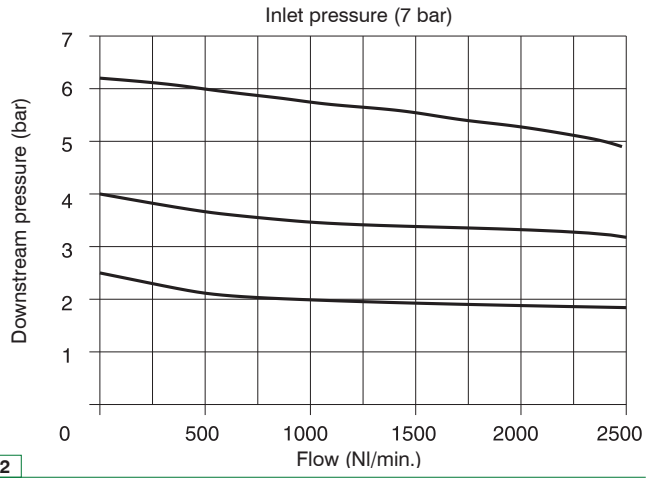

Size 2

Flow rate curves

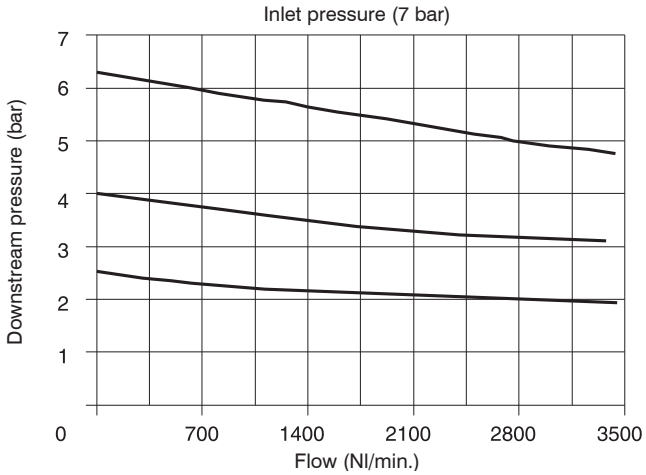

Size 3

Adjustment characteristic

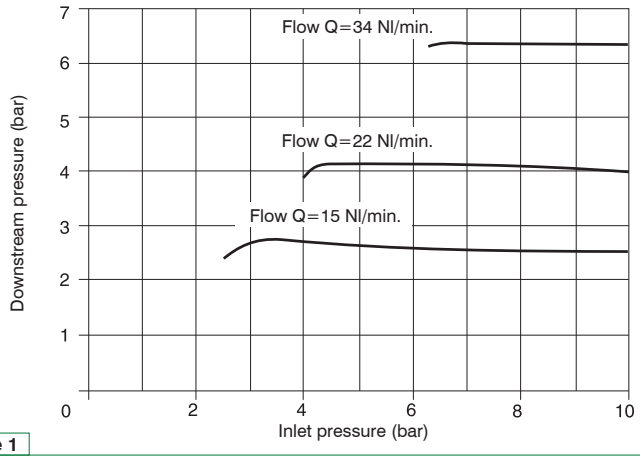

Size 1

Adjustment characteristic

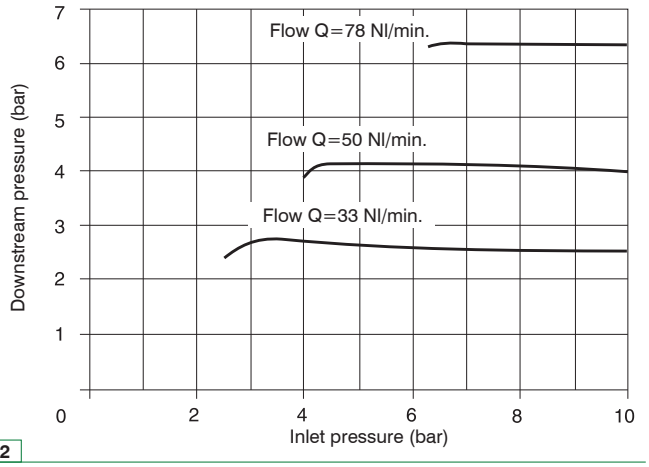

Size 2

Adjustment characteristic

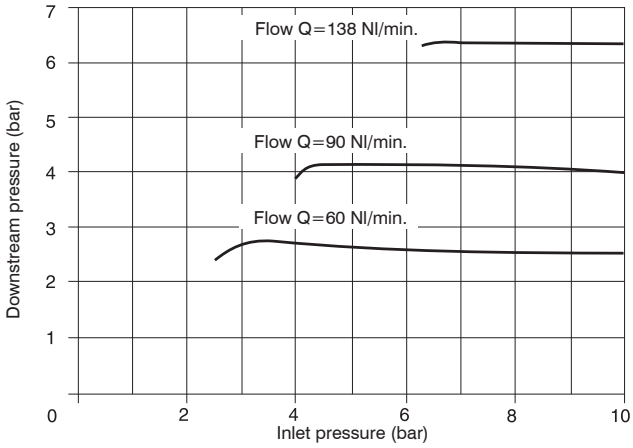

Size 3

Overall dimensions and technical information are provided solely for informative purpose and may be modified without notice.

High sensitive air pressure regulators with high flow rate relieving

- Accurate capacity to maintain set pressure
- Sensitivity combined with high relieving rates
- High flow rate with extremely low pressure drop
- Pressure adjusting lockable handle by simply pressing it donwards in the desired position
- Aluminium body
- Ring nut for panel mounting
- Construction with controlled refiel
- Atex certification (II 2GD) on request

Technical characteristics	Size	
	Size 1	Size 3
Body and connections type	Aluminium body, integrated aluminium connections	
IN / OUT connections	G1/4”	G1/2”
Assembly configuration	Stand alone Panel mounting With fixing bracket	Stand alone Panel mounting With fixing bracket
Assembly position	Indifferent	
Fluid	20μ filtered air and preferably non lubricated	
Air flow with inlet pressure 10 bar (Nl/min)	5	
Pressure range (bar)	0,1 - 2 / 0,1 - 4 / 0,1 - 7 / 0,1 - 10	
Regulation	Manual push and lock with pressure Manual lockable with accessories	
Pressure measurement	G1/8” Pressure gauge connection port	
Max. fittings torque IN / OUT connections	G1/4” metal: 20	G1/2” metal: 30

Operational characteristics	Size	
	Size 1	Size 3
Maximum working pressure (bar)	10	
Minimum working pressure (bar)	0,5	
Working temperature (°C)	-5 ÷ +50	

Weights	Size	
	Size 1	Size 3
Aluminium body version (g)	380	970

Overall dimensions and technical information are provided solely for informative purpose and may be modified without notice.

Order codes

17 | 3S2B | . | 0010 | . | E | . | K

Size, body and connections
1S2B : Aluminium body, connections G1/4” (only for size 1)
3S2B : Aluminium body, connections G1/2” (only for size 3)

Pressure range
0002 : 0,1 - 2 bar
0004 : 0,1 - 4 bar
0007 : 0,1 - 7 bar
0010 : 0,1 - 10 bar

Type
: Standard
E : External pressure feedback

Options
: Standard
K : Lockable version
U : Lockable version with universal key

Example: 173S2B.0010.E.K
Size 3 high sensitive air pressure regulator with high flow rate relieving, aluminium body, G1/2” connections, 0,1 - 10 bar, external pressure feedback, lockable version

Dimensions

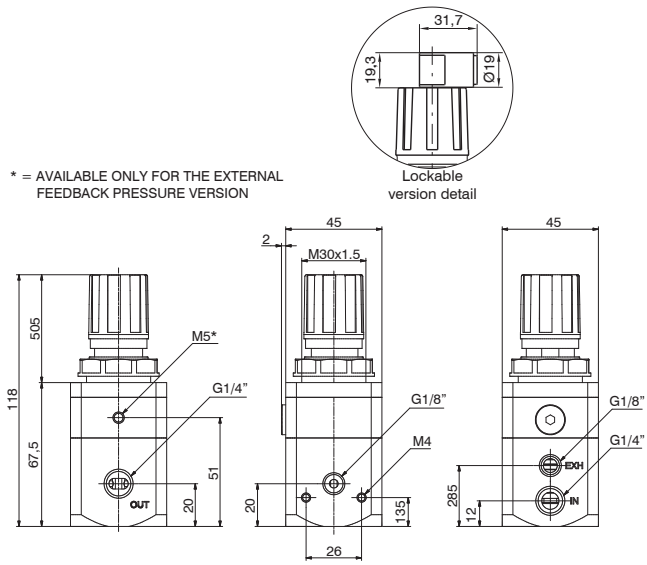

Size 1

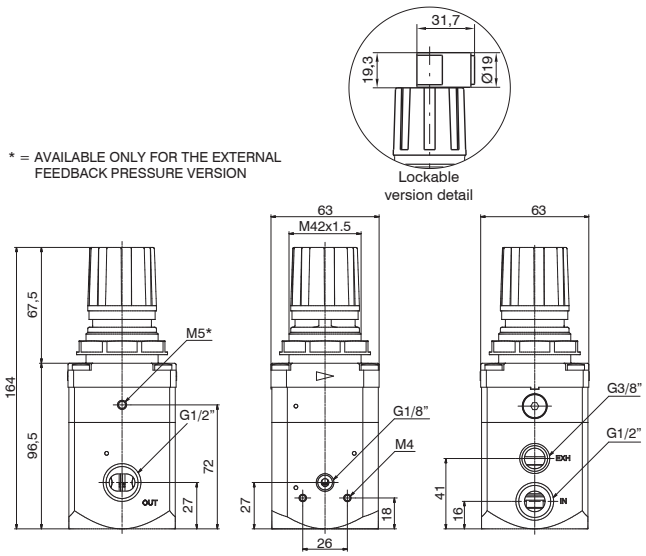

Size 3

Characteristic curves

Flow rate curves

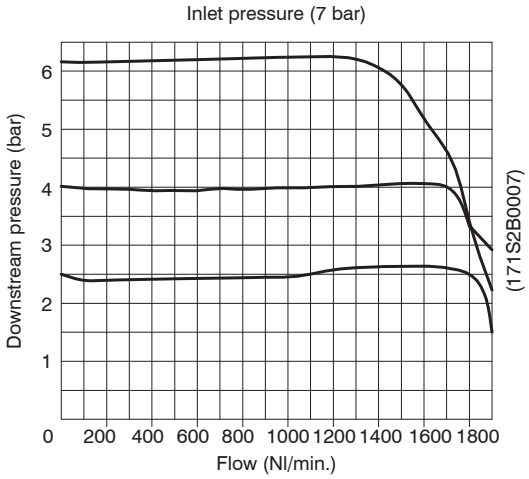

Size 1

Flow rate curves

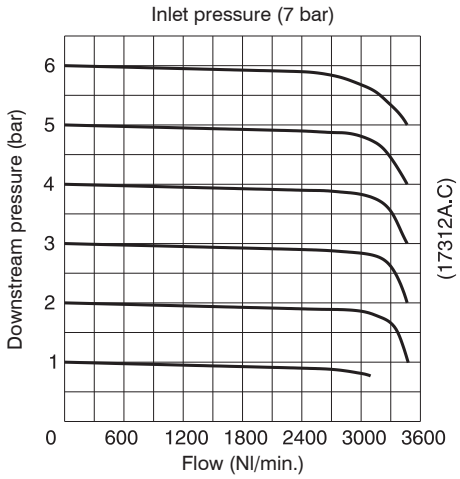

Size 3

Adjustment characteristic

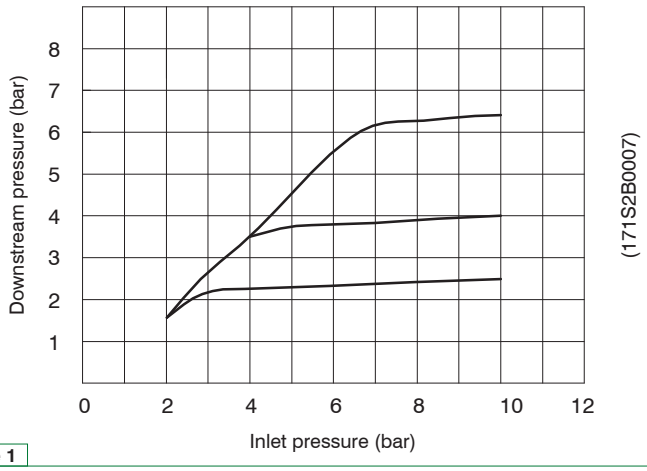

Size 1

Adjustment characteristic

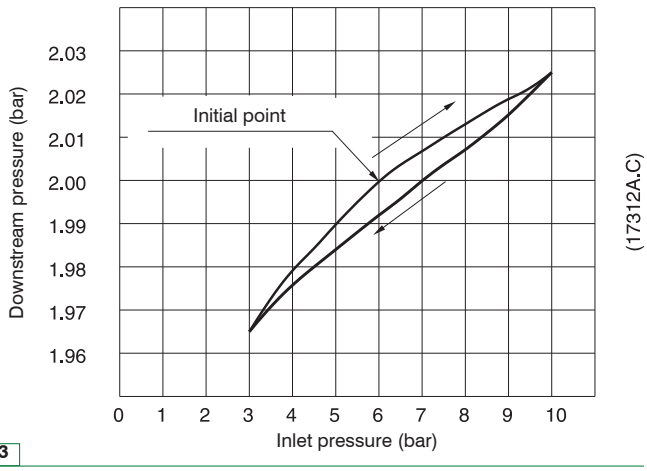

Size 3

Exhaust flow rate curves

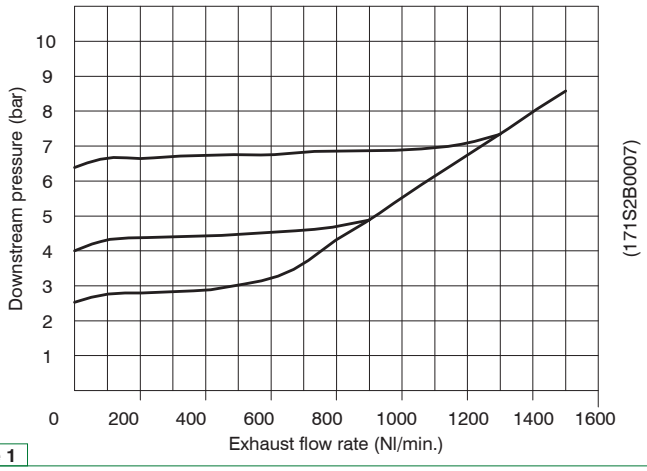

Size 1

Exhaust flow rate curves

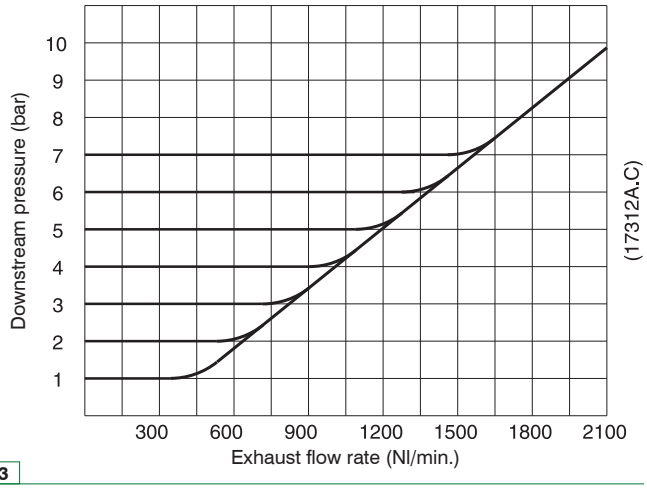

Size 3

Overall dimensions and technical information are provided solely for informative purpose and may be modified without notice.

Piloted pressure regulators

- Diaphragm piloted pressure regulator
- Available in 3 sizes with flow rates up to 3500 Nl/min and connections from 1/4” a 1”
- Atex certification (II 2GD o II 3GD) on request

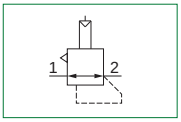

Note
Always regulate the rising pressure.

Technical characteristics	Size		
	Size 2	Size 3	Size 4
Body and connections type	Aluminium body, integrated aluminium connections		
IN / OUT connections	G1/4” - G3/8”	G3/8” - G1/2”	G1”
Assembly configuration	Stand alone Panel mounted with M5 screws	Stand alone Panel mounted with M5 screws	Stand alone Panel mounted with M8 screws
Assembly position	Indifferent		
Pressure range (bar)	0,5÷10		
Regulation	Pneumatic piloting		
Pressure measurement	G1/8” Pressure gauge connection port		
Max. fittings torque IN / OUT connections	G1/4” metal: 20 G3/8” metal: 25	G3/8” metal: 25 G1/2” metal: 30	G1” metal: 35

Operational characteristics	Size		
	Size 2	Size 3	Size 4
Maximum working pressure (bar)	13		
Minimum working pressure (bar)	0,5		
Pilot pressure range (bar)	0,5÷10		
Working temperature (°C)	-5 ÷ +50		

Weights	Size		
	Size 2	Size 3	Size 4
Aluminium body version (g)	313	510	1638

Overall dimensions and technical information are provided solely for informative purpose and may be modified without notice.

Order codes

17 **302A** . P . **L**

Size, body and connections
202A : Aluminium body, connections G1/4” (only for size 2)
202B : Aluminium body, connections G3/8” (only for size 2)
302A : Aluminium body, connections G3/8” (only for size 3)
302B : Aluminium body, connections G1/2” (only for size 3)
402NB : Aluminium body, connections G1” (only for size 4)

Options
: Standard
L : Without relieving (not available for Size 4)

Example: 17302A.P.L
Size 3 piloted pressure regulator, aluminium body, G3/8” connections, without relieving

Dimensions

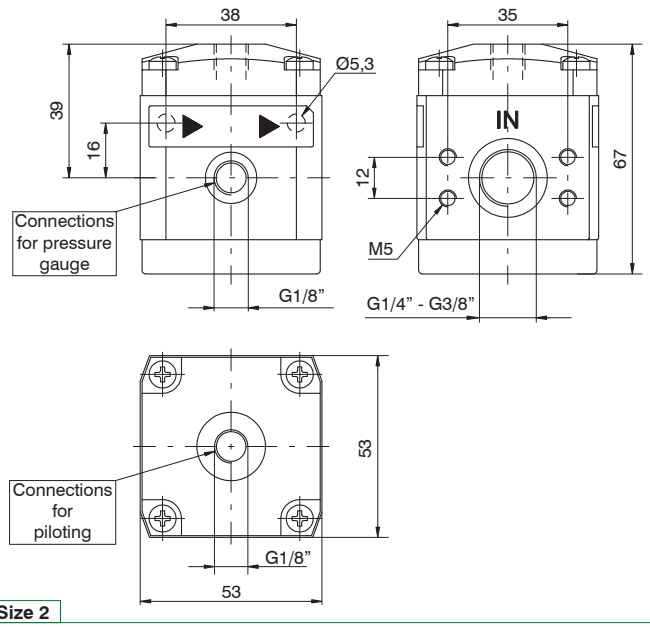

Size 2

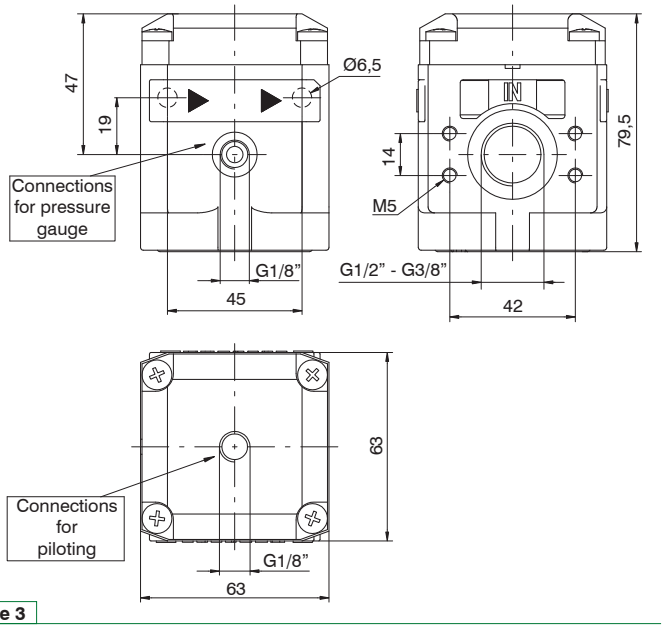

Size 3

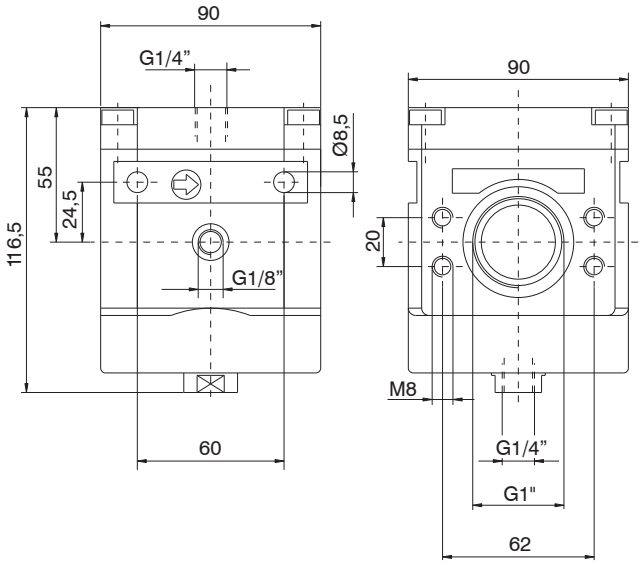

Size 4

Overall dimensions and technical information are provided solely for informative purpose and may be modified without notice.

Characteristic curves

Flow rate curves

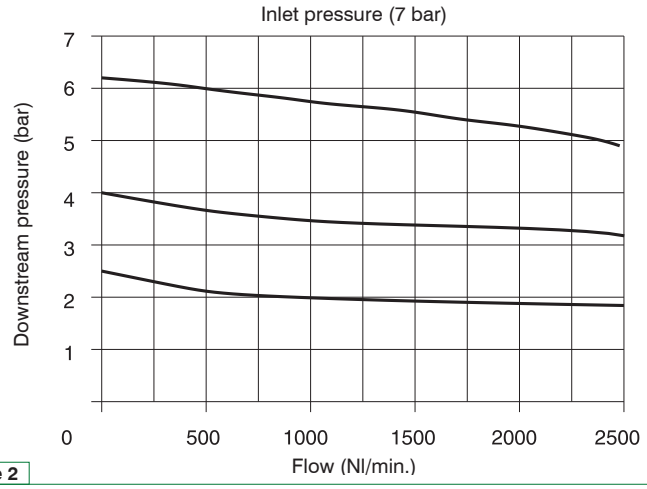

Size 2

Flow rate curves

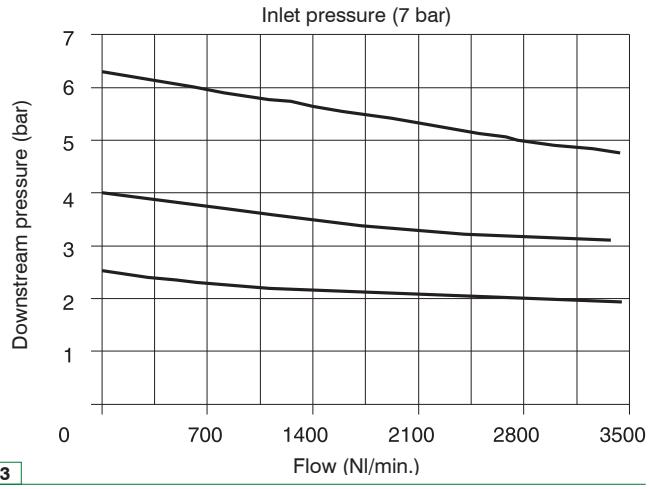

Size 3

Flow rate curves

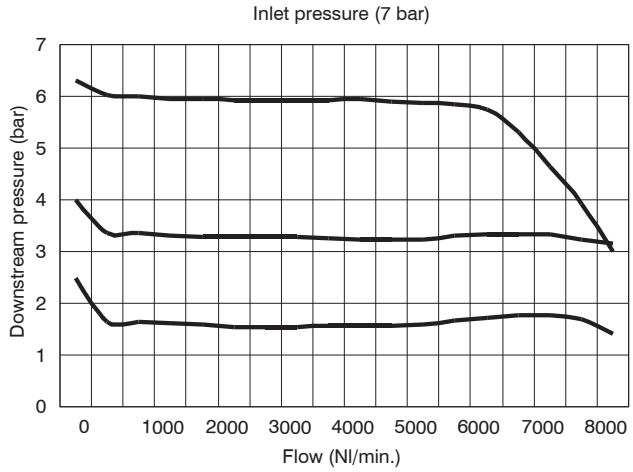

Size 4

Adjustment characteristic

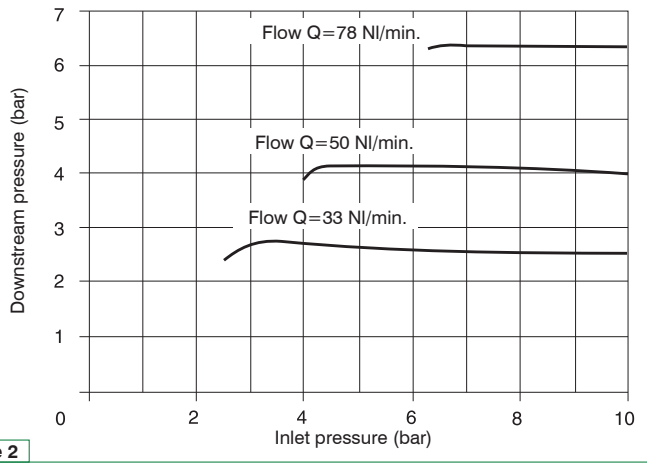

Size 2

Adjustment characteristic

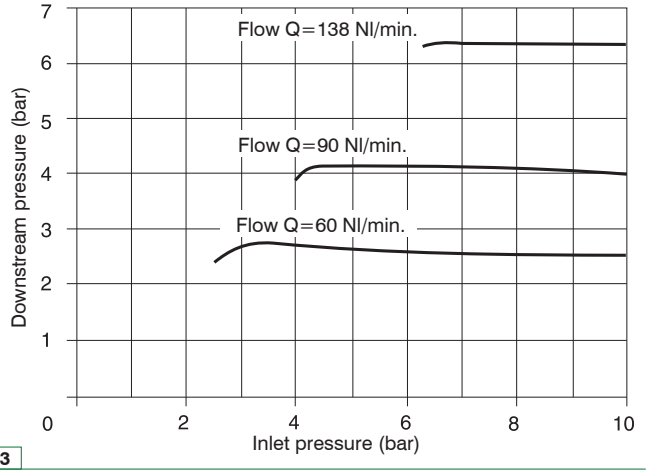

Size 3

Adjustment characteristic

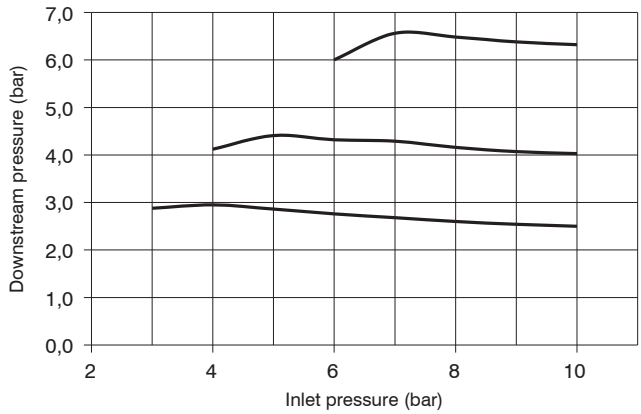

Size 4

Curve di pilotggio

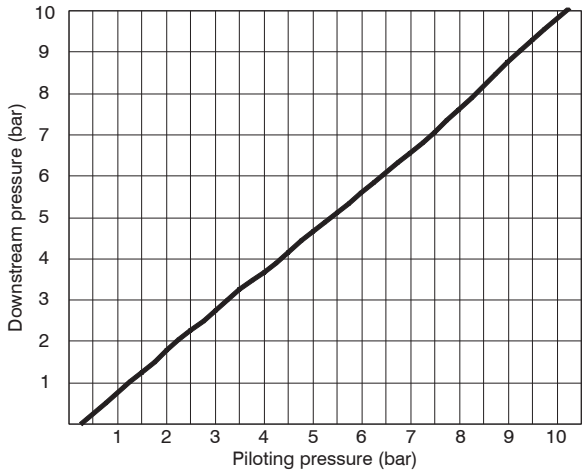

Size 2

Curve di pilotggio

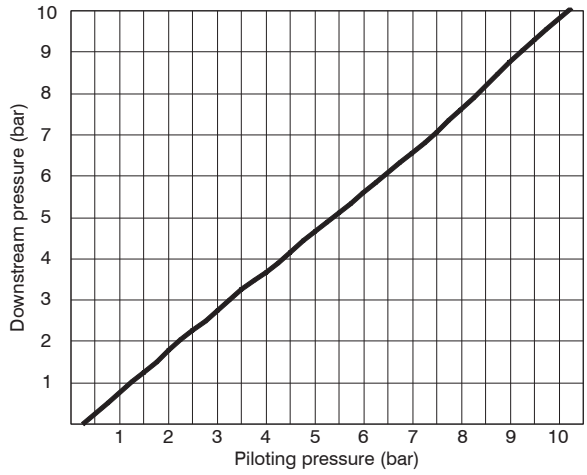

Size 3

Curve di pilotggio

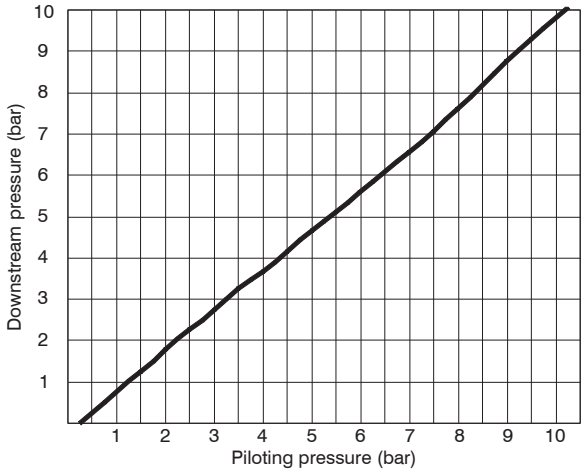

Size 4

Overall dimensions and technical information are provided solely for informative purpose and may be modified without notice.

High sensitive pressure regulator with pneumatic pilot

- Accurate capacity to maintain set pressure
- Sensitivity combined with high relieving rates
- High flow rate with extremely low pressure drop
- Aluminium body
- Construction with controlled refiel
- Atex certification (II 2GD) on request

Technical characteristics	Size
	Size 3
Body and connections type	Aluminium body, integrated aluminium connections
IN / OUT connections	G1/2”
Assembly configuration	Stand alone
Assembly position	Indifferent
Fluid	20μ filtered air and preferably non lubricated
Air flow with inlet pressure 10 bar (Nl/min)	5
Pressure measurement	G1/8” Pressure gauge connection port
Max. fittings torque IN / OUT connections	G1/2” metal: 30

Operational characteristics	Size
	Size 3
Maximum working pressure (bar)	10
Minimum working pressure (bar)	0,5
Working temperature (°C)	-5 ÷ +50

Weights	Size
	Size 3
Aluminium body version (g)	970

Order codes

17 **3P2B** . 0010

Size, body and connections
3P2B : Aluminium body, connections G1/2” (only for size 3)

Example: 173P2B.0010
Size 3 high sensitive pressure regulator with pneumatic pilot, aluminium body, G1/2” connections

Dimensions

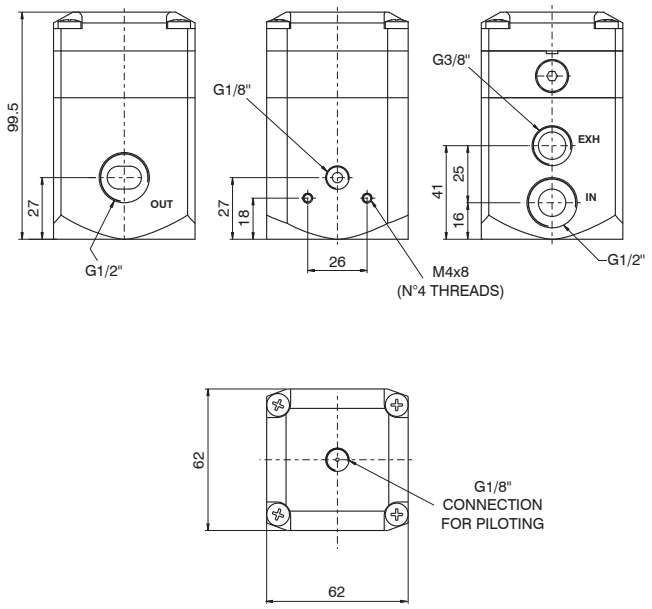

Size 3

Characteristic curves

Flow rate curves

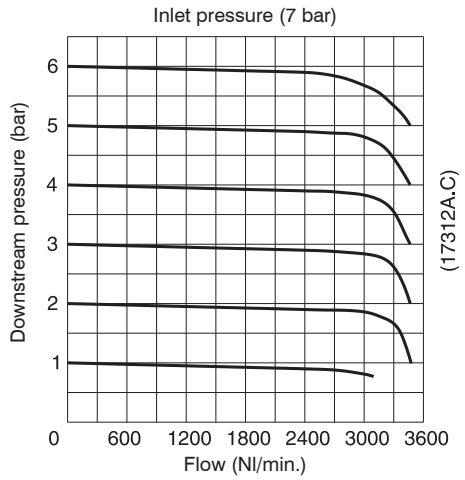

Size 3

Adjustment characteristic

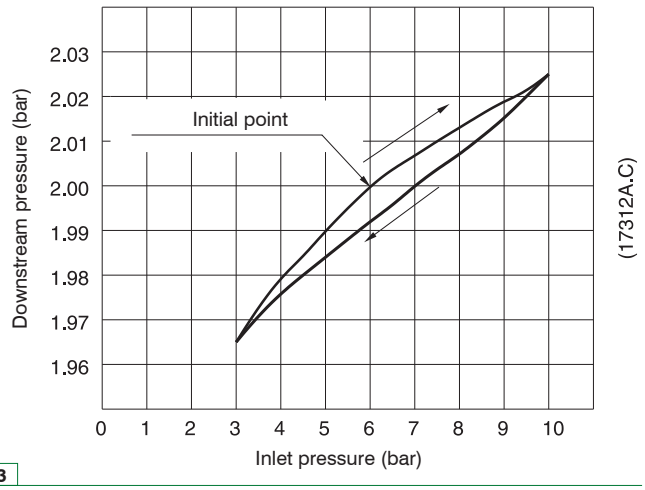

Size 3

Exhaust flow rate curves

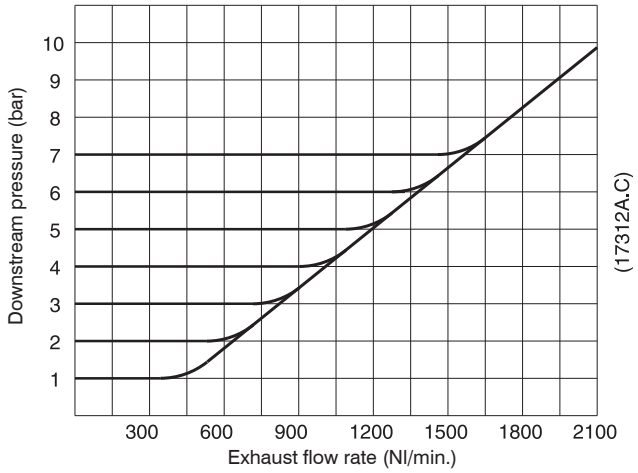

Size 3

Overall dimensions and technical information are provided solely for informative purpose and may be modified without notice.

Panel mounting pressure regulator

- Diaphragm pressure regulator with relieving
- Balanced poppet
- Technopolymer body, metal connections
- Pressure adjusting lockable handle by simply pressing it donwards in the desired position
- Ring nut for panel mounting
- Atex certification (II 3GD) on request

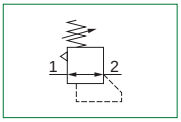

Technical characteristics	Size
	Size 1
Body and connections type	Technopolymer body, integrated metal connections
IN / OUT connections	G1/8” - G1/4”
Assembly configuration	Stand alone Panel mounting With fixing bracket
Assembly position	indifferent
Pressure range (bar)	0 - 2 / 0 - 4 / 0 - 8 / 0 - 12
Regulation	Manual push and lock with pressure Manual lockable with accessories
Pressure measurement	G1/8” Pressure gauge connection port
Max. fittings torque IN / OUT connections	G1/8” metal: 15 G1/4” metal: 20

Operational characteristics	Size
	Size 1
Maximum working pressure (bar)	13
Minimum working pressure (bar)	0,5
Working temperature (°C)	-5 ÷ +50

Weights	Size
	Size 1
Technopolymer body version (g)	110

Overall dimensions and technical information are provided solely for informative purpose and may be modified without notice.

Order codes

17 | 109A | . | D | . | L | . | K

Size, body and connections
109A : Technopolymer body, connections G1/8”
109B : Technopolymer body, connections G1/4”

Pressure range
A : 0 - 2 bar
B : 0 - 4 bar
C : 0 - 8 bar
D : 0 - 12 bar

Type
L : Without relieving
SM : Improved relieving
SR : Quick exhaust (Unbalanced poppet)
SRM : Quick exhaust with improved relieving
SMF : Improved relieving with controlled relief

Options
: Standard
K : Lockable version
U : Lockable version with universal key

Example: 17109A.D.L.K
Size 1 Panel mounting pressure regulator, technopolymer body, G1/8” connections, 0 - 12 bar, without relieving, Lockable version

Dimensions

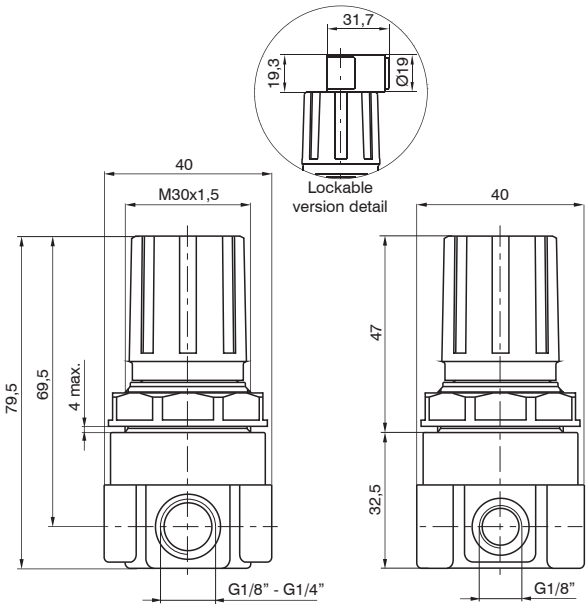

Size 1

Characteristic curves

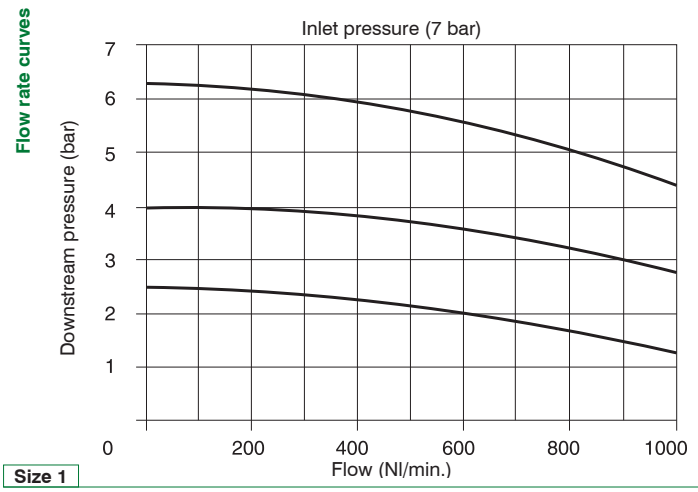

Size 1

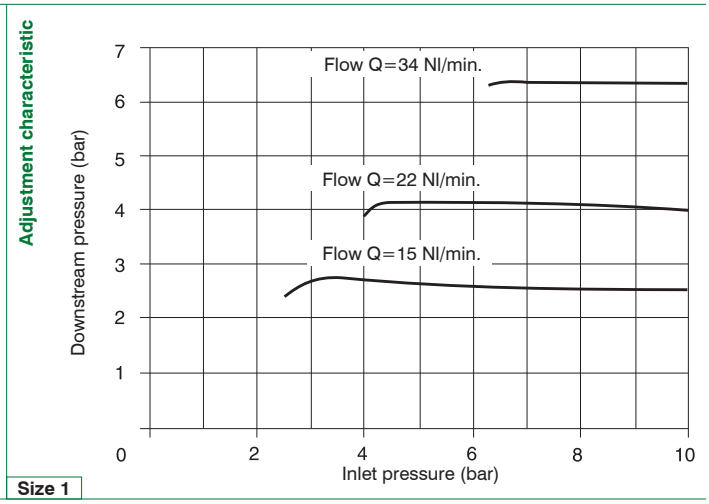

Size 1

Overall dimensions and technical information are provided solely for informative purpose and may be modified without notice.

Panel mounting pressure regulator including pressure gauge

- Diaphragm pressure regulator with relieving
- Balanced poppet
- Technopolymer body with aluminum reinforced threaded connections
- Pressure adjusting lockable handle by simply pressing it donwards in the desired position
- Including pressure gauge integrated on the knob
- Ring nut for panel mounting
- Atex certification (II 3GD) on request

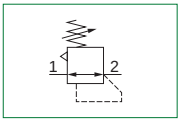

Technical characteristics	Size
	Size 1
Body and connections type	Technopolymer body, aluminum reinforced threaded connections
IN / OUT connections	G1/8” - G1/4”
Assembly configuration	Stand alone Panel mounting With fixing bracket
Assembly position	Indifferent
Pressure range (bar)	0 - 2 / 0 - 4 / 0 - 8 / 0 - 12
Regulation	Manual push and lock with pressure
Pressure measurement	G1/8” Pressure gauge connection port integrated on the knob
Max. fittings torque IN / OUT connections	G1/8” metal: 15 G1/4” metal: 20

Operational characteristics	Size
	Size 1
Maximum working pressure (bar)	13
Minimum working pressure (bar)	0,5
Working temperature (°C)	-5 ÷ +50

Weights	Size
	Size 1
Technopolymer body version (g)	250

Overall dimensions and technical information are provided solely for informative purpose and may be modified without notice.

Order codes

17 | 129A | . | D

Size, body and connections
129A : Technopolymer body, connections G1/8”
129B : Technopolymer body, connections G1/4”

Pressure range
A : 0 - 2 bar
B : 0 - 4 bar
C : 0 - 8 bar
D : 0 - 12 bar

Example: 17129A.D
Size 1 panel mounting pressure regulator including pressure gauge, technopolymer body, G1/8” connections, 0 - 12 bar

Dimensions

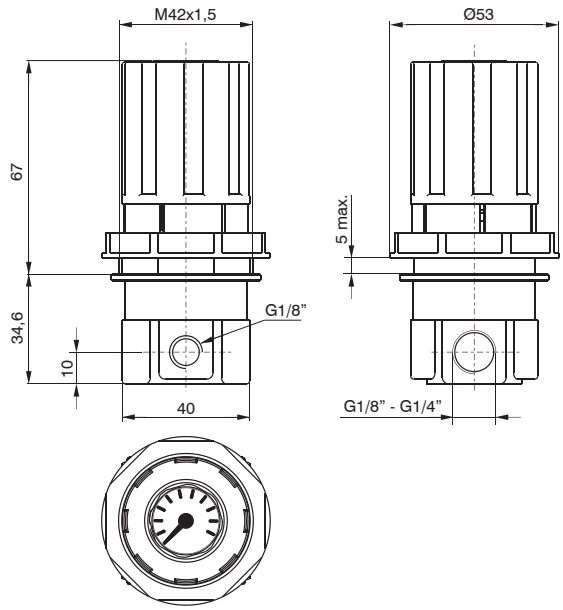

Size 1

Characteristic curves

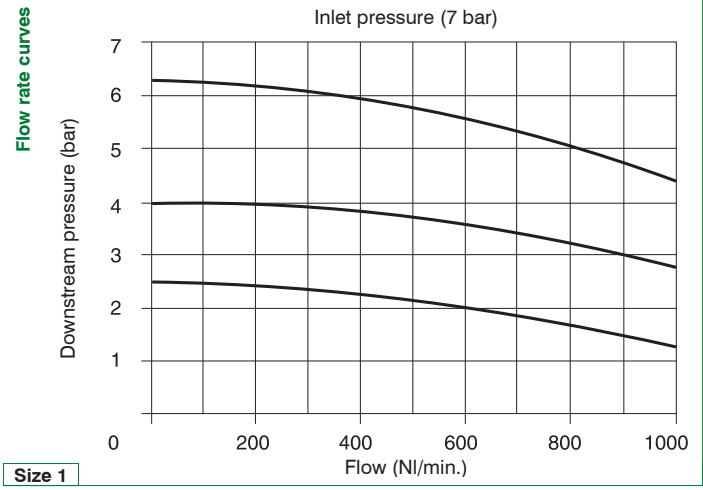

Size 1

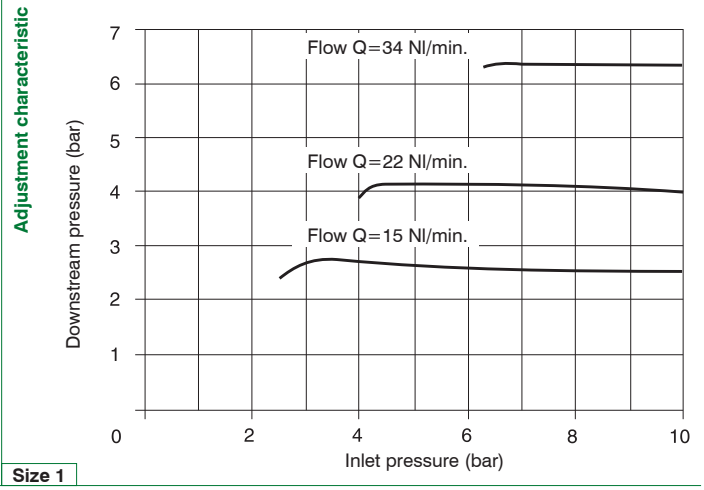

Size 1

Overall dimensions and technical information are provided solely for informative purpose and may be modified without notice.

Pressure regulators for manifold

- Diaphragm pressure regulator with relieving.
- Available with 2 front outputs connections G1/8”
- Available in four pressure ranges up to 12 bar
- Ring nut for panel mounting
- Available with integrated pressure gauge on the top of adjusting knob
- Air supply can be applied by both directions (Right or Left)
- Max. 6off pressure regulators in manifold configuration
- Atex certification (II 2GD) on request

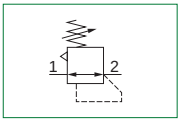

Note
For installations where a more accurate and constant pressure is required, the unit should be installed as close as possible to the point of use.

Technical characteristics	Size
	Size 1
Body and connections type	Zinc alloy body, integrated zinc alloy connections
IN / OUT connections	G1/8” - G1/4”
Assembly configuration	Stand alone Panel mounting Panel mounted with M4 screws With fixing bracket
Assembly position	Indifferent
Pressure range (bar)	0 - 2 / 0 - 4 / 0 - 8 / 0 - 12
Regulation	Manual push and lock with pressure Manual lockable with accessories (only for version without pressure gauge)
Pressure measurement	Integrated pressure gauge on the top of adjusting knob (optional)
Max. fittings torque IN / OUT connections	G1/8” metal: 15 G1/4” metal: 20

Operational characteristics	Size
	Size 1
Maximum working pressure (bar)	13
Minimum working pressure (bar)	0,5
Working temperature (°C)	-5 ÷ +50

Weights	Size
	Size 1
Zinc alloy body version (g)	380

Overall dimensions and technical information are provided solely for informative purpose and may be modified without notice.

Order codes

17 | 0B2A | . | D | . | K

Size, body and connections
0B2A : Zinc alloy body, connections G1/8”
0B2B : Zinc alloy body, connections G1/4”
0M2A : Zinc alloy body, connections G1/8” with integrated pressure gauge
0M2B : Zinc alloy body, connections G1/4” with integrated pressure gauge

Pressure range
A : 0 - 2 bar
B : 0 - 4 bar
C : 0 - 8 bar
D : 0 - 12 bar

Options
: Standard
K : Lockable version (only for version without pressure gauge)
U : Lockable version with universal key (only for version without pressure gauge)

Example: 170B2A.D.K
Size 1 pressure regulators for manifold, Zinc alloy body, G1/8” connections, 0 - 12 bar, without pressure gauge, Lockable version

Dimensions

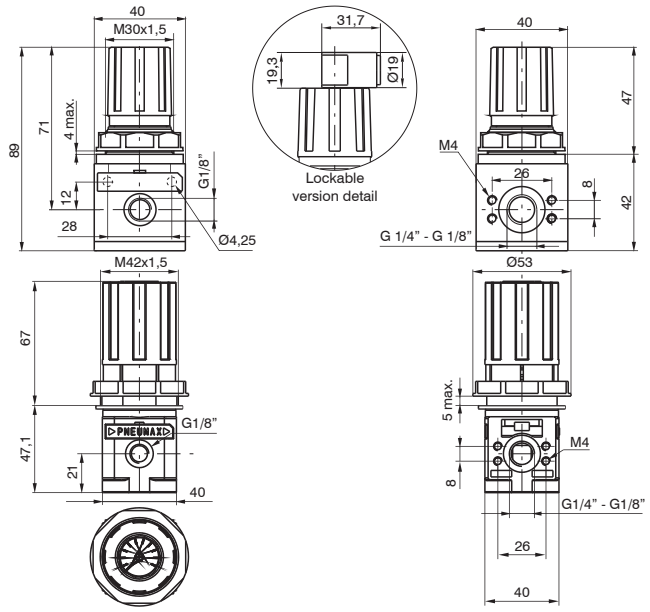

Size 1

Characteristic curves

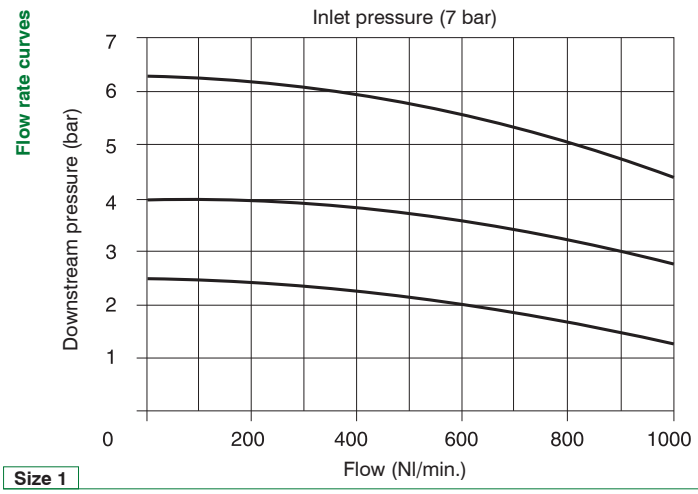

Size 1

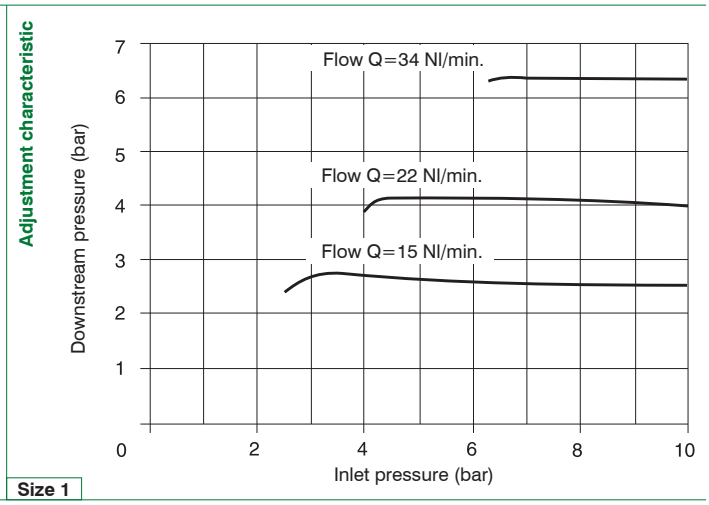

Size 1

Overall dimensions and technical information are provided solely for informative purpose and may be modified without notice.

Manifold pressure regulators

- Manifold pressure regulators
- Available in four pressure ranges up to 12 bar
- Inlet pressure common for the whole manifold of pressure regulator
- A maximum of 6 pressure regulators can be mounted
- Atex certification (II 2GD) on request

Technical characteristics	Size
	Size 1
Body and connections type	Zinc alloy body, integrated zin alloy connections
IN / OUT connections	G1/8” - G1/4”
Assembly configuration	Stand alone Panel mounting Panel mounted with M4 screws With fixing bracket
Assembly position	indifferent
Pressure range (bar)	0 - 2 / 0 - 4 / 0 - 8 / 0 - 12
Regulation	Manual push and lock with pressure Manual lockable with accessories (only for version without pressure gauge)
Pressure measurement	G1/8” Pressure gauge connection port
Max. fittings torque IN / OUT connections	G1/8” metal: 15 G1/4” metal: 20

Operational characteristics	Size
	Size 1
Maximum working pressure (bar)	13
Minimum working pressure (bar)	0,5
Working temperature (°C)	-5 ÷ +50

Order codes

17 | BB2A | . | 6 | . | C | . | C | . | C | . | C | . | C | . | C | . | K |

Size, body and connections
BB2A : Zinc alloy body, connections G1/8”
BB2B : Zinc alloy body, connections G1/4”
BM2A : Zinc alloy body, connections G1/8” with integrated pressure gauge
BM2B : Zinc alloy body, connections G1/4” with integrated pressure gauge

Number of regulators
2 : n. 2 Regulators
3 : n. 3 Regulators
4 : n. 4 Regulators
5 : n. 5 Regulators
6 : n. 6 Regulators

Pressure range
A : 0 - 2 bar
B : 0 - 4 bar
C : 0 - 8 bar
D : 0 - 12 bar

Pressure range
A : 0 - 2 bar
B : 0 - 4 bar
C : 0 - 8 bar
D : 0 - 12 bar

Pressure range
A : 0 - 2 bar
B : 0 - 4 bar
C : 0 - 8 bar
D : 0 - 12 bar

Pressure range
A : 0 - 2 bar
B : 0 - 4 bar
C : 0 - 8 bar
D : 0 - 12 bar

Pressure range
A : 0 - 2 bar
B : 0 - 4 bar
C : 0 - 8 bar
D : 0 - 12 bar

Pressure range
A : 0 - 2 bar
B : 0 - 4 bar
C : 0 - 8 bar
D : 0 - 12 bar

Options
: Standard
K : Lockable version (only for version without pressure gauge)
U : Lockable version with universal key (only for version without pressure gauge)

Example : 17BB2A.6.C.C.C.C.C.C.K : Size 1 manifold pressure regulators G1/8”, 0 - 8 bar, without pressure gauge, Lockable version

Overall dimensions and technical information are provided solely for informative purpose and may be modified without notice.

Dimensions

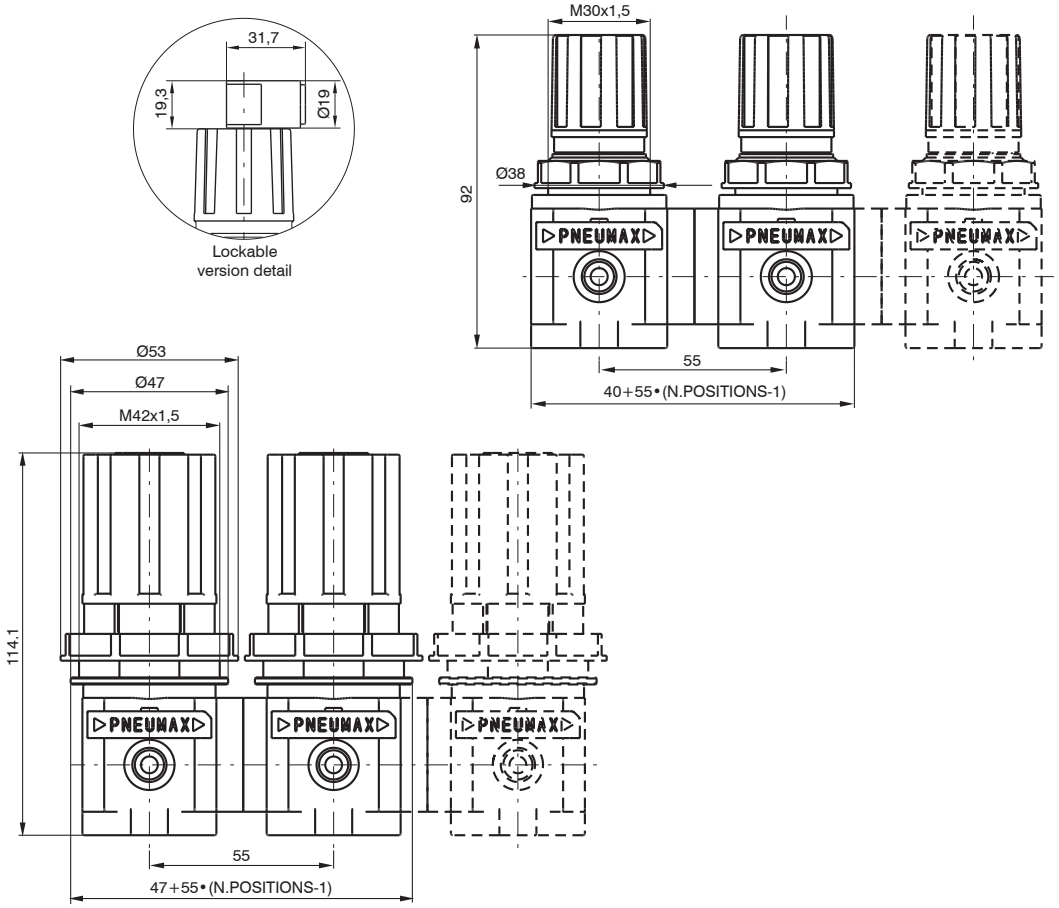

Size 1

Characteristic curves

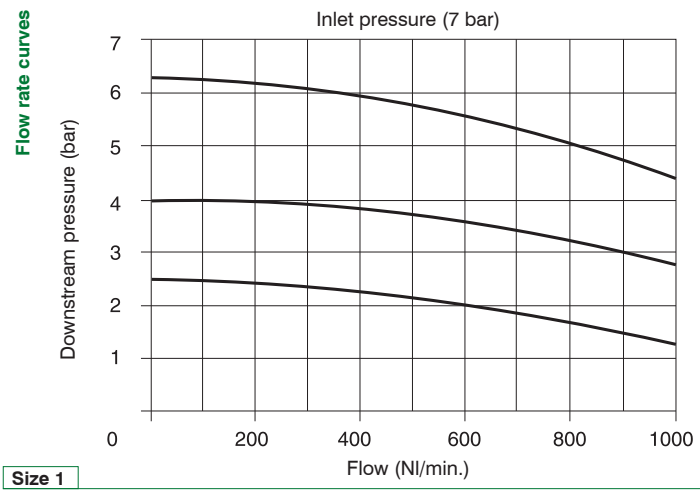

Size 1

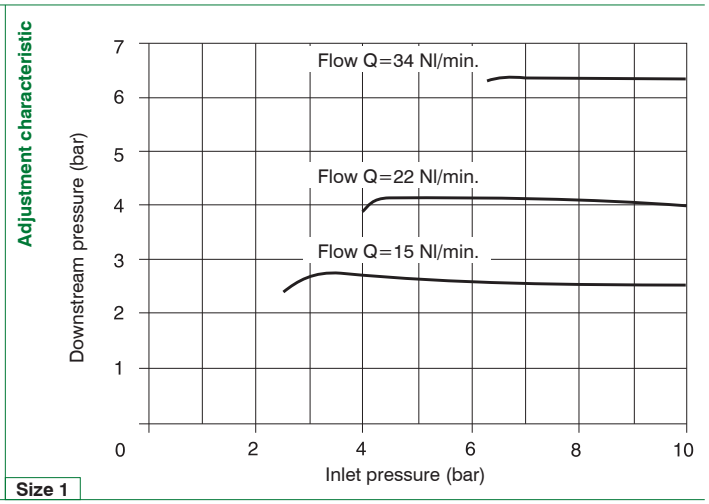

Size 1

Lubricators

- Oil mist lubricator
- Available in 4 sizes with flow rates up to 10000 Nl/min and connections from 1/8” to 1”
- Bowls screwed to the body (Size 1)
- Bowl assembly via bayonet type quick coupling mechanism with safety button (Size 2 - Size 3 - Size 4)
- Variable orifice size in function of the flow rate
- Oil quantity regulation mechanism and
  oil quantity visualization dome made of polycarbonate (PC)
- Oil refill plug
- Available with low level electrical sensor NO and NC
- Atex certification (II 2GD o II 3GD) on request

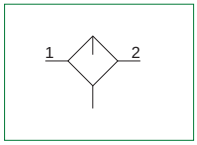

Technical characteristics	Size			
	Size 1	Size 2	Size 3	Size 4
Body and connections type	Zinc alloy body, Zinc alloy integrated connections Technopolymer body, metal connections	Aluminium body, integrated aluminium connections		
Protection and bowl type	Technopolymer protection - PA bowl (Size 1 available without protection)			Metal bowl with blind metal bowl
IN / OUT connections	G1/8” - G1/4”	G1/4” - G3/8”	G3/8” - G1/2”, G3/4”	G1”
Assembly configuration	Stand alone Panel mounted with M4 screws	Stand alone Panel mounted with M5 screws	Stand alone Panel mounted with M6 screws	Stand alone Panel mounted with M8 screws
Assembly position	Vertical ±5°			
Bowl capacity (cm³)	36	52	62	300
Lubrication type	Oil mist			
Oil level regulation	Manual, complete with visual indicator			
Max. fittings torque IN / OUT connections	G1/8” metal: 15 G1/4” metal: 20	G1/4” metal: 20 G3/8” metal: 25	G3/8” metal: 25 G1/2” metal: 30 G3/4” metal: 35	G1”metal: 35

Operational characteristics	Size			
	Size 1	Size 2	Size 3	Size 4
Maximum working pressure (bar)	13			
Minimum working pressure (bar)	0,5			
Min.operational flow at 6,3 bar (Nl/min)	10	20		100
Indicative oil drop rate (Nl/min)	1 drope every 300/600			
Oil type	FD22 - HG32			
Working temperature (°C)	-5 ÷ +50			

Weights	Size			
	Size 1	Size 2	Size 3	Size 4
Zinc alloy body version (g)	258	/	/	/
Technopolymer body version (g)	108	/	/	/
Aluminium body version (g)	/	280	435	1500

Overall dimensions and technical information are provided solely for informative purpose and may be modified without notice.

Order codes

17 **303A** . **MA**

Size, body and connections
003A : Zinc alloy body, connections G1/8” (only for size 1)
003B : Zinc alloy body, connections G1/4” (only for size 1)
103A : Technopolymer body, connections G1/8” (only for size 1)
103B : Technopolymer body, connections G1/4” (only for size 1)
203A : Aluminium body, connections G1/4” (only for size 2)
203B : Aluminium body, connections G3/8” (only for size 2)
303A : Aluminium body, connections G3/8” (only for size 3)
303B : Aluminium body, connections G1/2” (only for size 3)
303E : Aluminium body, connections G3/4” (only for size 3)
403B : Aluminium body, connections G1” (only for size 4)

Type
P : Protected bowl (only for size 1)
MA : Electrical minimum level sensor NO (not available for Size 1)
MC : Electrical minimum level sensor NC (not available for Size 1)

Example: 17303A.MA
Size 3 Lubricator, Aluminium body, G3/8” connections, normally open low level electrical sensor

Dimensions

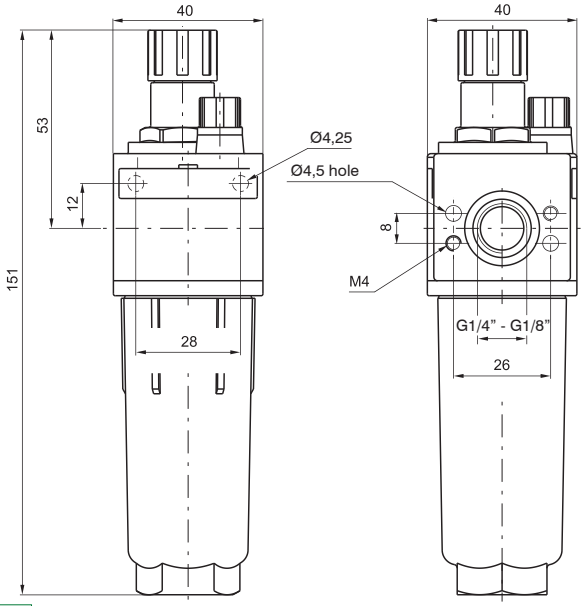

Size 1

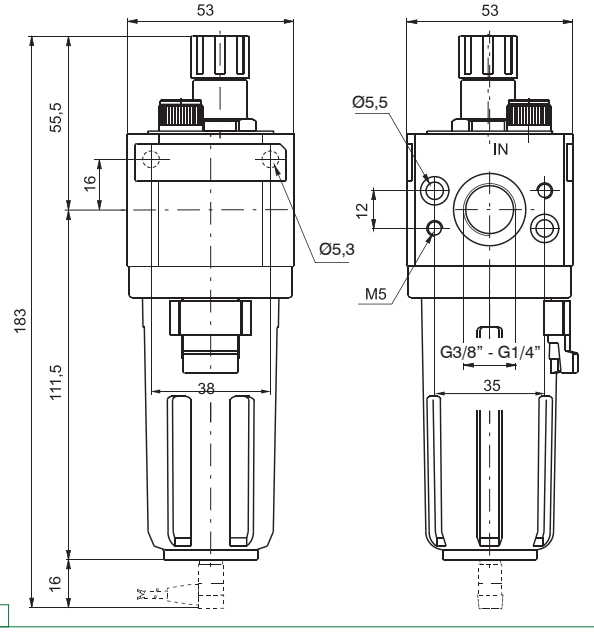

Size 2

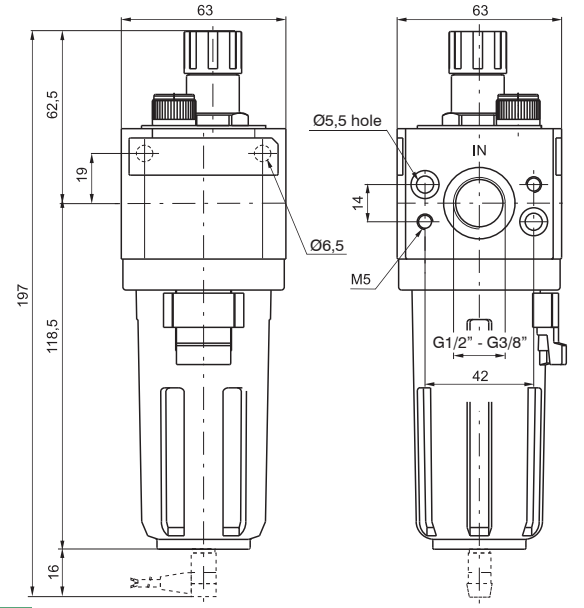

Size 3

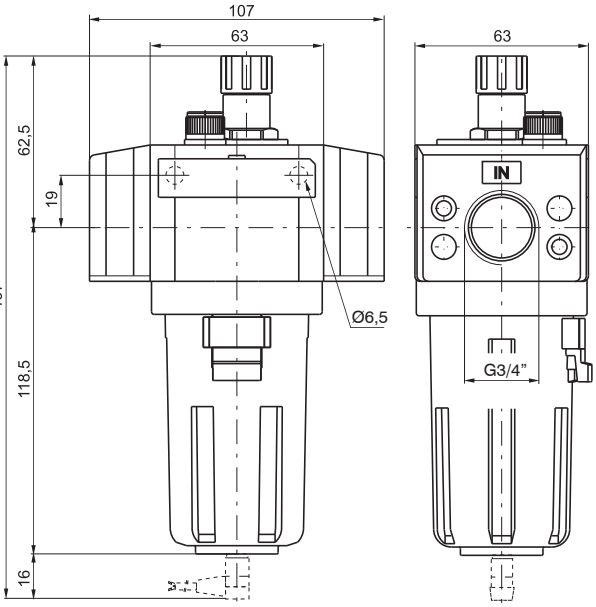

Size 3 3/4"

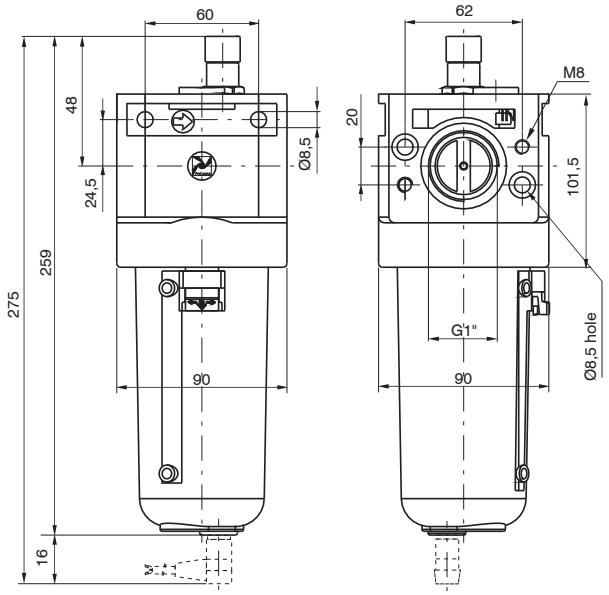

Size 4

Overall dimensions and technical information are provided solely for informative purpose and may be modified without notice.

Characteristic curves

Flow rate curves

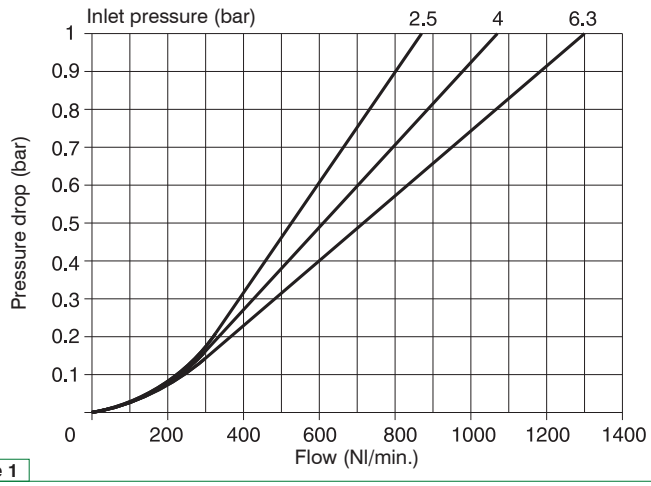

Size 1

Flow rate curves

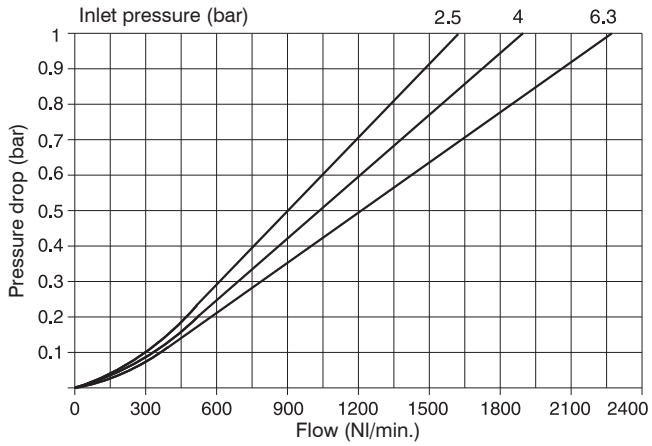

Size 2

Flow rate curves

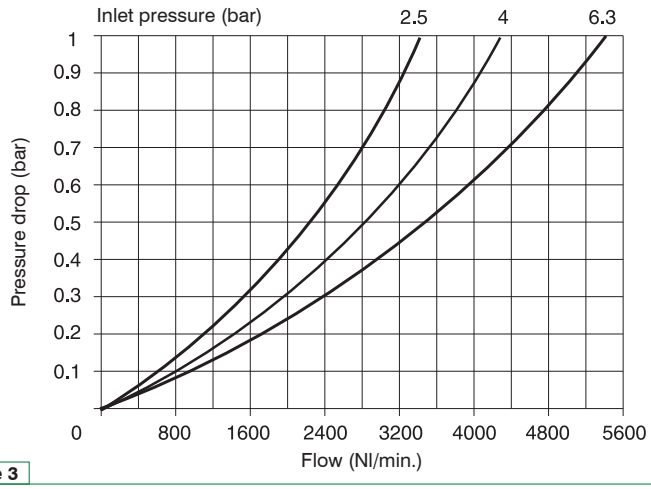

Size 3

Flow rate curves

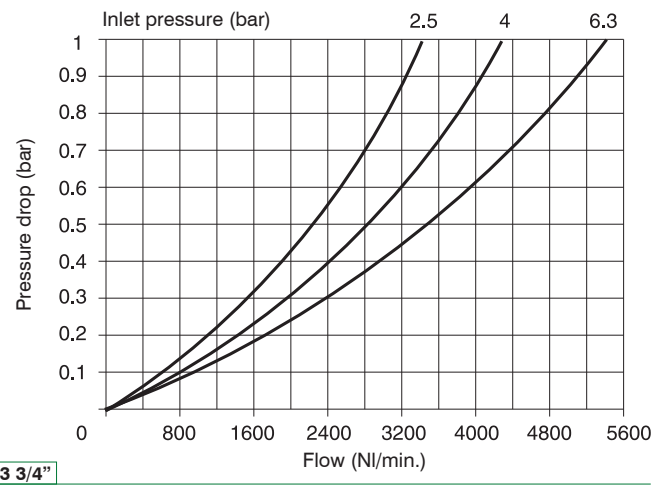

Size 3 3/4”

Flow rate curves

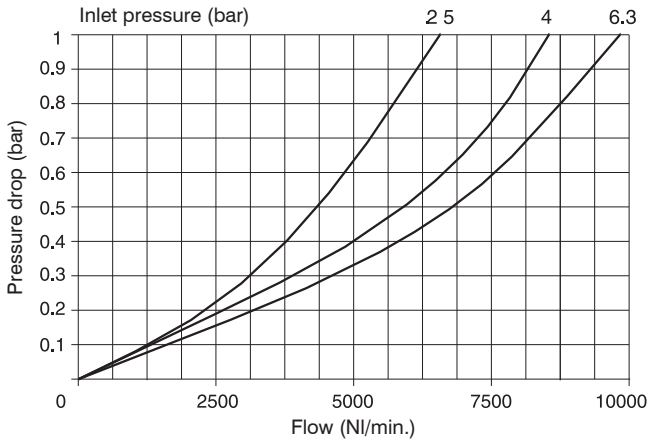

Size 4

Shut-off valve

- 3/2 N.C. poppet valve for opening and exhausting the circuit
- Allows to pneumatically supply the part of the system downstream of the valve
- Manual adjusting lockable handle (in shut-off position) with a maximum of three pad-locks
- Atex certification (II 2GD o II 3GD) on request

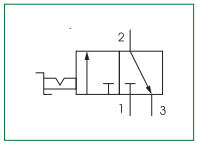

Technical characteristics	Size			
	Size 1	Size 2	Size 3	Size 4
Body and connections type	Zinc alloy body, Zinc alloy integrated connections Technopolymer body, metal connections	Aluminium body, integrated aluminium connections		
Operated type	Manual			
IN / OUT connections	G1/4”	G3/8”	G1/2”	G1”
Discharge connections	G1/8”	G1/4”	G3/8”	G1/4”
Assembly configuration	Stand alone Panel mounted with M4 screws	Stand alone Panel mounted with M5 screws	Stand alone Panel mounted with M6 screws	Stand alone Panel mounted with M8 screws
Assembly position	Indifferent			
Max. fittings torque IN / OUT connections	G1/4” metal: 20	G3/8” metal: 25	G1/2” metal: 30	G1”metal: 35

Operational characteristics	Size			
	Size 1	Size 2	Size 3	Size 4
Maximum working pressure (bar)	13			10
Minimum working pressure (bar)	0,5			
Nominal flow rate at 6 bar with Δp=1 (Nl/min)	1000	2100	2500	8000
Working temperature (°C)	-5 ÷ +50			

Weights	Size			
	Size 1	Size 2	Size 3	Size 4
Zinc alloy body version (g)	280	/	/	/
Technopolymer body version (g)	155	/	/	/
Aluminium body version (g)	/	380	550	1600

Overall dimensions and technical information are provided solely for informative purpose and may be modified without notice.

Order codes

17 | 330 | . | A

Size, body and connections
030 : Zinc alloy body, connections G1/4” (only for size 1)
130 : Technopolymer body, connections G1/4” (only for size 1)
230 : Aluminium body, connections G3/8” (only for size 2)
330 : Aluminium body, connections G1/2” (only for size 3)
430 : Aluminium body, connections G1” (only for size 4)

Type
A : Not lockable handle
B : Lockable handle

Example: 17330.A
Shut-off valve Size 3, Aluminium body, G1/2” connections, with not lockable handle

Dimensions

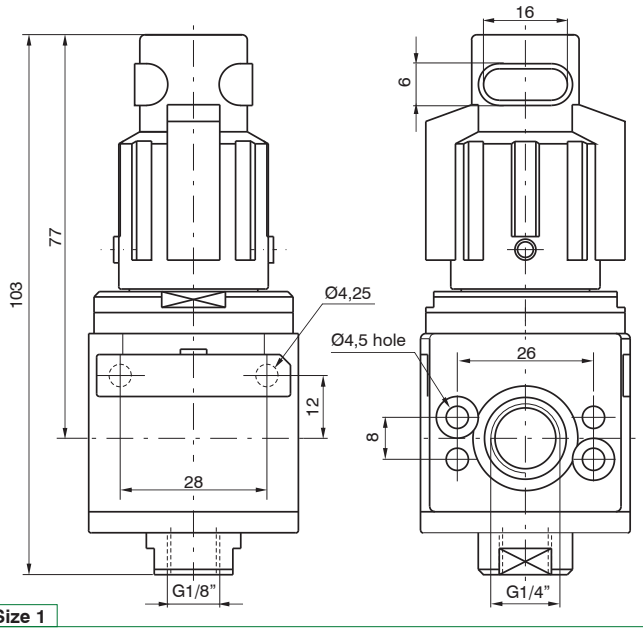

Size 1

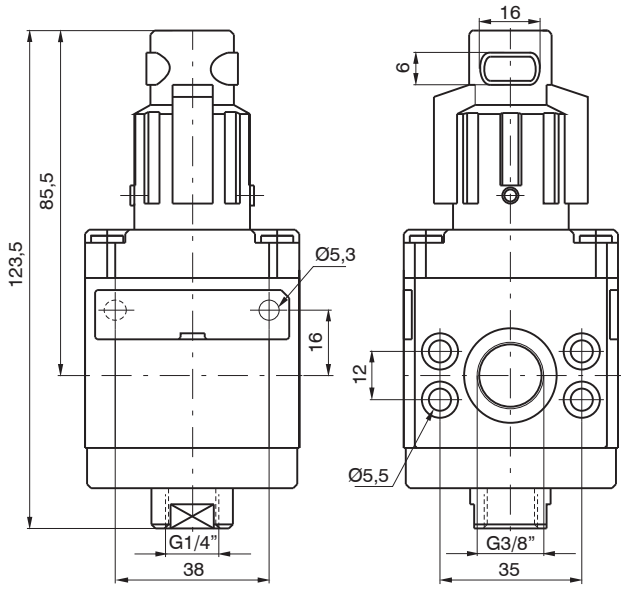

Size 2

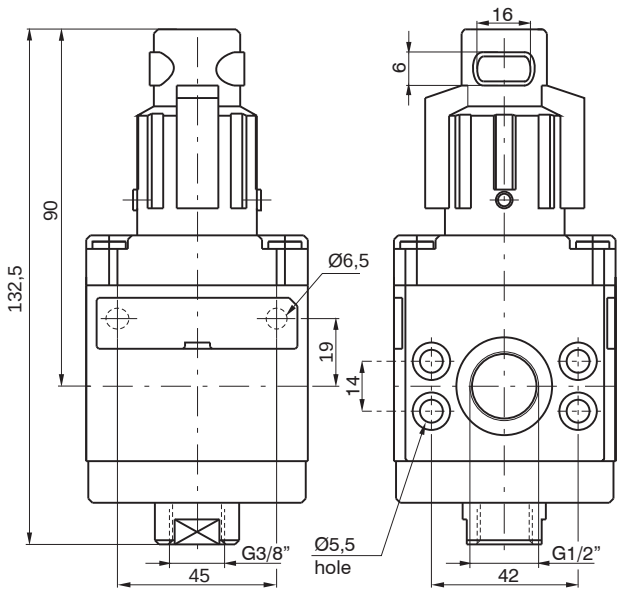

Size 3

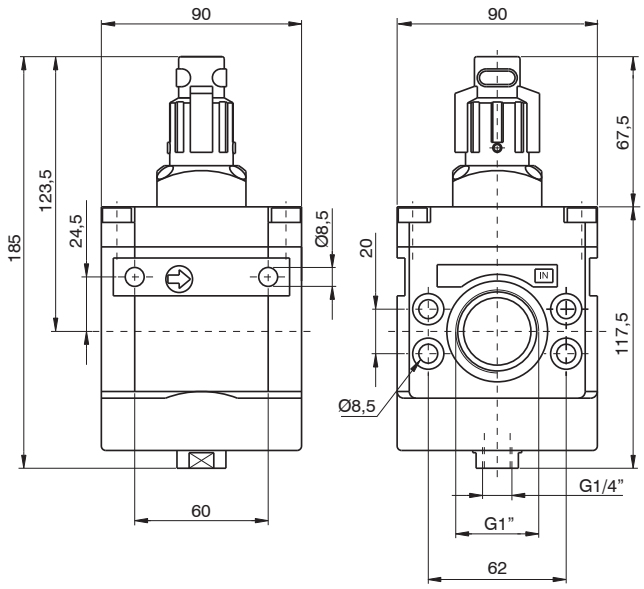

Size 4

Electric shut-off valve

- 3/2 N.C. poppet valve for entering and exhausting the circuit
- It allows to pneumatically supply the part of the system downstream of the valve
- Opening and closing of the valve via solenoid operator
- The supply pressure must be minimum 2 bars or higher
- It is possible to produce the external supplied solenoid version by mounting the 305.10.05 between the valve main body and the solenoid pilot valve.
- The air supply can only be done via port 1
- Ensure that the downstream air consumption will not cause a pressure drop which could result in the pressure falling below the minimum operating values.
- If the pressure inside the valve falls below 2 bars , the valve might shut off.
- Atex certification (II 2GD o II 3GD) on request

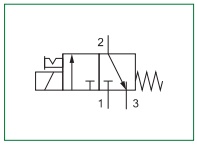

Technical characteristics	Size		
	Size 1	Size 2	Size 3
Body and connections type	Zinc alloy body, Zinc alloy integrated connections Technopolymer body, metal connections	Aluminium body, integrated aluminium connections	
Operated type	Electric		
IN / OUT connections	G1/4”	G3/8”	G1/2”
Discharge connections	G1/8”	G1/4”	G3/8”
Assembly configuration	Stand alone Panel mounted with M4 screws	Stand alone Panel mounted with M5 screws	Stand alone Panel mounted with M6 screws
Assembly position	Indifferent		
Max. fittings torque IN / OUT connections	G1/4” metal: 20	G3/8” metal: 25	G1/2” metal: 30

Operational characteristics	Size		
	Size 1	Size 2	Size 3
Maximum working pressure (bar)	10		
Minimum working pressure (bar)	2		
Nominal flow rate at 6 bar with Δp=1 (Nl/min)	1000	2100	3200
Working temperature (°C)	-5 ÷ +50		

Weights	Size		
	Size 1	Size 2	Size 3
Zinc alloy body version (g)	345	/	/
Technopolymer body version (g)	215	/	/
Aluminium body version (g)	/	440	680

Overall dimensions and technical information are provided solely for informative purpose and may be modified without notice.

Order codes

17 **330** . **M2**

Size, body and connections
030 : Zinc alloy body, connections G1/4” (only for size 1)
130 : Technopolymer body, connections G1/4” (only for size 1)
230 : Aluminium body, connections G3/8” (only for size 2)
330 : Aluminium body, connections G1/2” (only for size 3)

Type
M2 : Electric with M2
M2/9 : Electric with M2/9

Example: 17330.M2
Electric shut-off valve Size 3, Aluminium body, G1/2” connections, electric withM2

Dimensions

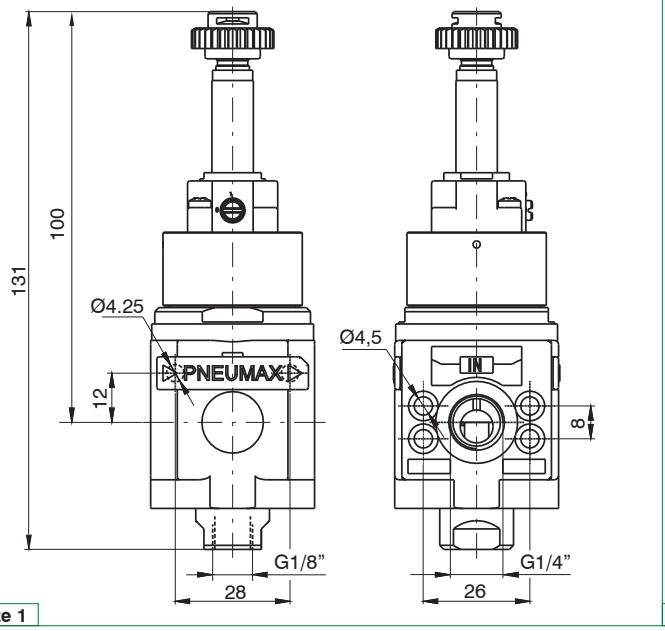

Size 1

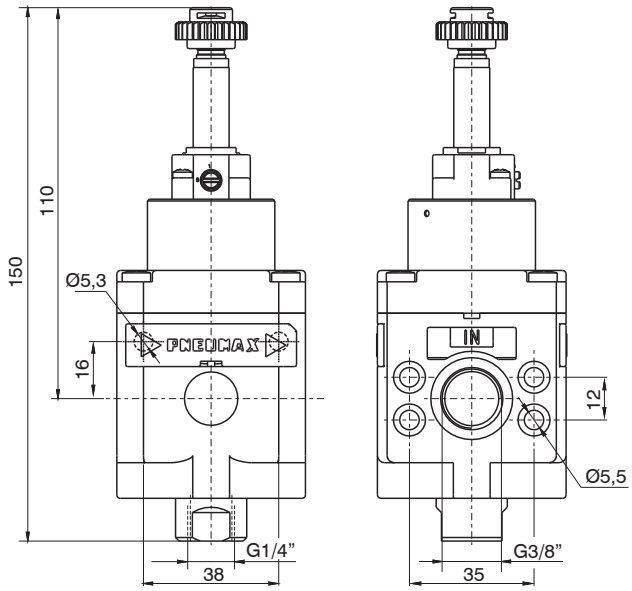

Size 2

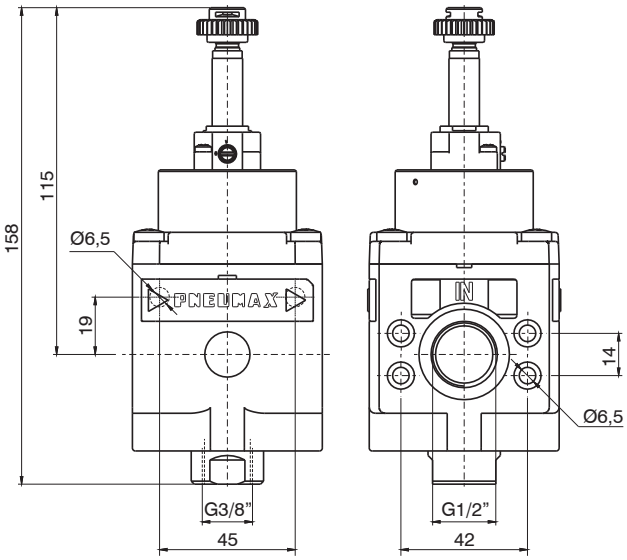

Size 3

Pneumatic shut-off valve

- 3/2 N.C. poppet valve for entering and exhausting the circuit
- It allows to pneumatically supply the part of the system downstream of the valve
- Opening and closing of the valve via pneumatic operator
- The piloting pressure must be minimum 2 bar or higher
- The air supply can only be done via port 1
- Ensure that the downstream air consumption will not cause a pressure drop which could result in the pressure falling below the minimum operating values
- If the pressure inside the valve falls below 2 bars , the valve might shut off
- Atex certification (II 2GD o II 3GD) on request

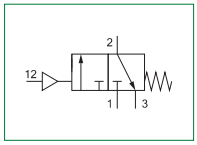

Technical characteristics	Size		
	Size 1	Size 2	Size 3
Body and connections type	Zinc alloy body, Zinc alloy integrated connections Technopolymer body, metal connections	Aluminium body, integrated aluminium connections	
Operated type	Pneumatic		
IN / OUT connections	G1/4”	G3/8”	G1/2”
Discharge connections	G1/8”	G1/4”	G3/8”
Pilot connections	G1/8”		
Assembly configuration	Stand alone Panel mounted with M4 screws	Stand alone Panel mounted with M5 screws	Stand alone Panel mounted with M6 screws
Assembly position	Indifferent		
Max. fittings torque IN / OUT connections	G1/4” metal: 20	G3/8” metal: 25	G1/2” metal: 30

Operational characteristics	Size		
	Size 1	Size 2	Size 3
Maximum working pressure (bar)	13		
Minimum working pressure (bar)	2		
Piloting pressure (bar)	2		
Nominal flow rate at 6 bar with Δp=1 (Nl/min)	1000	2100	3200
Working temperature (°C)	-5 ÷ +50		

Weights	Size		
	Size 1	Size 2	Size 3
Zinc alloy body version (g)	310	/	/
Technopolymer body version (g)	180	/	/
Aluminium body version (g)	/	405	645

Overall dimensions and technical information are provided solely for informative purpose and may be modified without notice.

Order codes

17 **330** . PN

Size, body and connections
030 : Zinc alloy body, connections G1/4” (only for size 1)
130 : Technopolymer body, connections G1/4” (only for size 1)
230 : Aluminium body, connections G3/8” (only for size 2)
330 : Aluminium body, connections G1/2” (only for size 3)

Example: 17330.PN
Pneumatic shut-off valve Size 3, Aluminium body, G1/2” connections, with pneumatic pilot

Dimensions

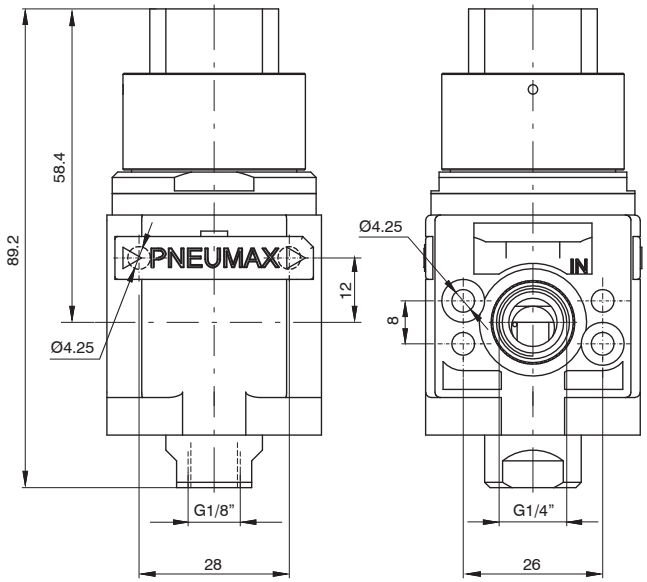

Size 1

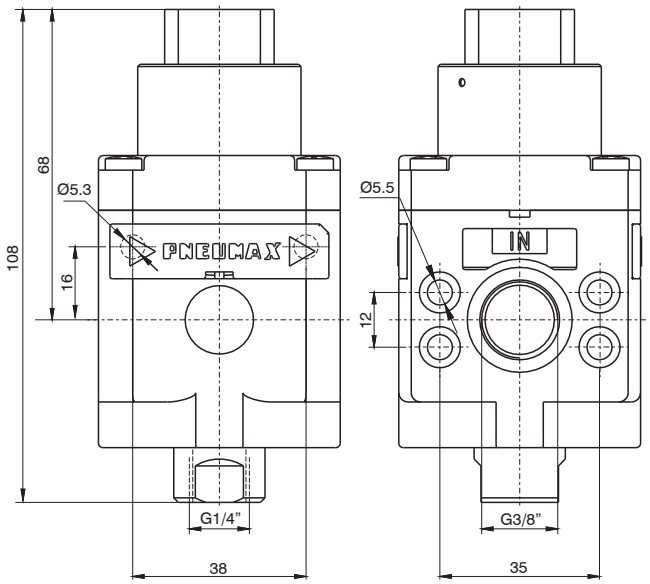

Size 2

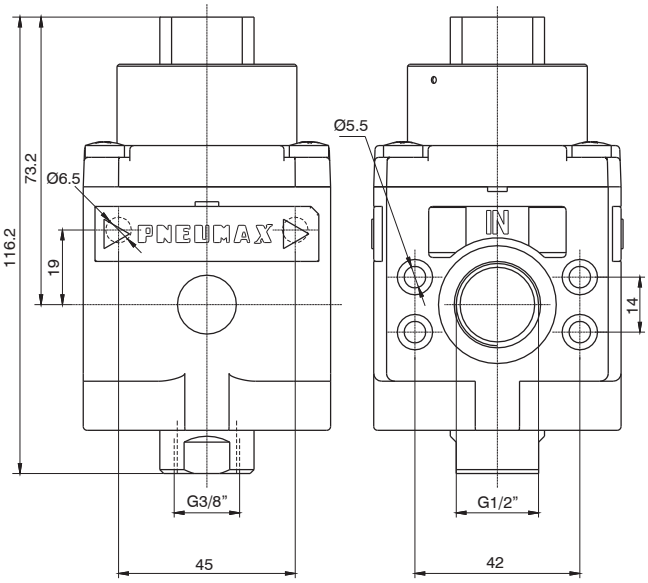

Size 3

Progressive start-up valve

- 3 way valve with double poppet
- Aluminium body
- Possibility to adjust the down stream circuit filling time by the enclosed adjustable metering screw
- Quick down stream circuit discharge
- Possibility for a pneumatic or electric piloting control
- Atex certification (II 2GD o II 3GD) on request

Technical characteristics	Size			
	Size 1	Size 2	Size 3	Size 4
Body and connections type	Aluminium body, integrated aluminium connections			
IN / OUT connections	G1/4”	G3/8”	G1/2”	G1”
Discharge connections	G1/8”	G1/4”	G3/8”	G3/4”
Assembly configuration	Stand alone Panel mounted with M4 screws	Stand alone Panel mounted with M5 screws	Stand alone Panel mounted with M6 screws	Stand alone Panel mounted with M8 screws
Assembly position	Indifferent			
Max. fittings torque IN / OUT connections	G1/4” metal: 20	G3/8” metal: 25	G1/2” metal: 30	G1”metal: 35

Operational characteristics	Size			
	Size 1	Size 2	Size 3	Size 4
Maximum working pressure (bar)	10			
Minimum working pressure (bar)	2,5			
Nominal flow rate at 6 bar with Δp=1 (Nl/min)	1000	1700	2500	8000
Flow with adjustable metering screw fully open (Nl/min)	150	340		3000
Working temperature (°C)	-5 ÷ +50			

Weights	Size			
	Size 1	Size 2	Size 3	Size 4
Aluminium body version (g)	365	595	1010	2300

Overall dimensions and technical information are provided solely for informative purpose and may be modified without notice.

Order codes

17	3	20

Size, body and connections
1 : Aluminium body, connections G1/4” (only for size 1)
2 : Aluminium body, connections G3/8” (only for size 2)
3 : Aluminium body, connections G1/2” (only for size 3)
4 : Aluminium body, connections G1” (only for size 4)

Type
10.M2 : Electric control complete wih M2 mechanic
20 : Pneumatic pilot

Example: 17320
Progressive start-up valve Size 3, Aluminium body, G1/2” connections, with pneumatic pilot

Dimensions

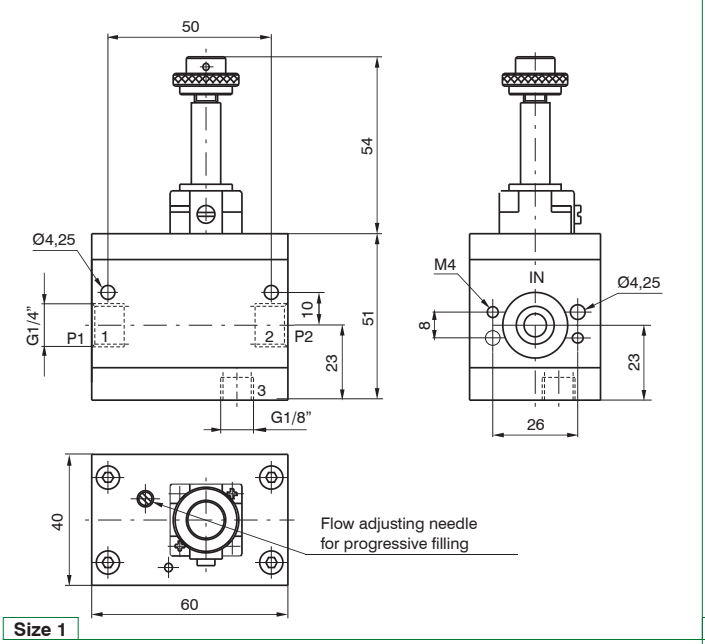

Size 1

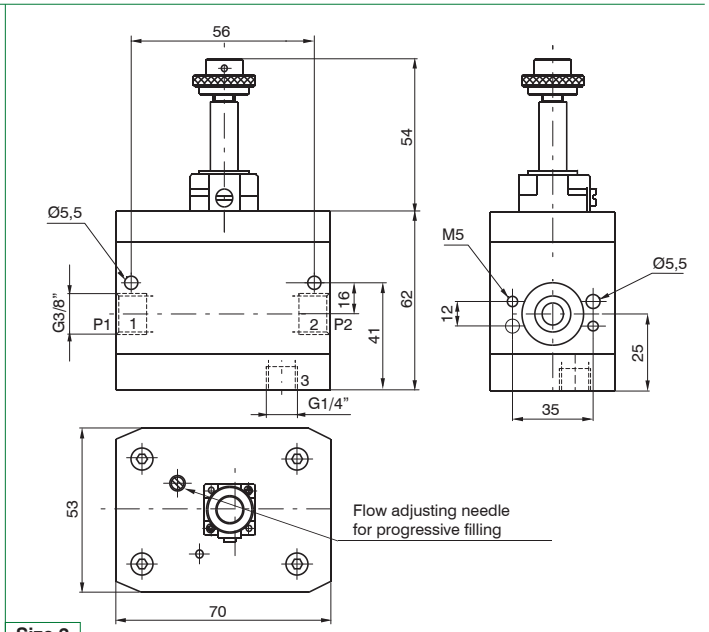

Size 2

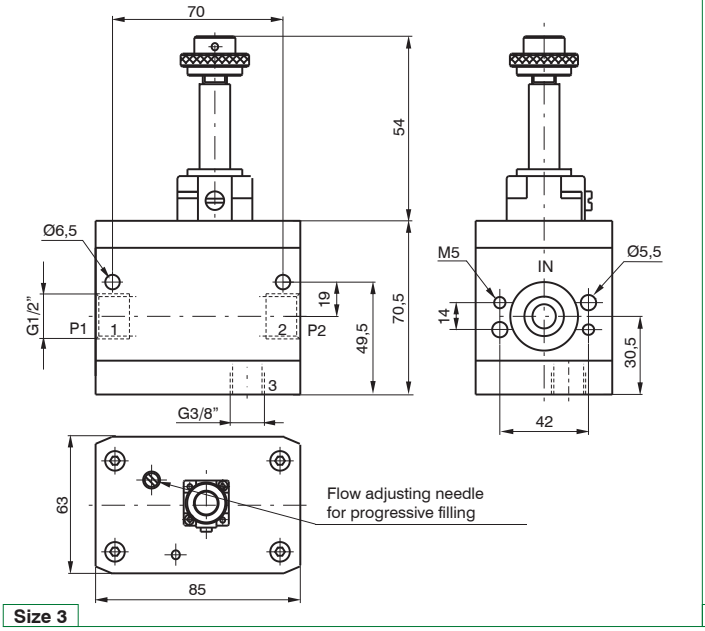

Size 3

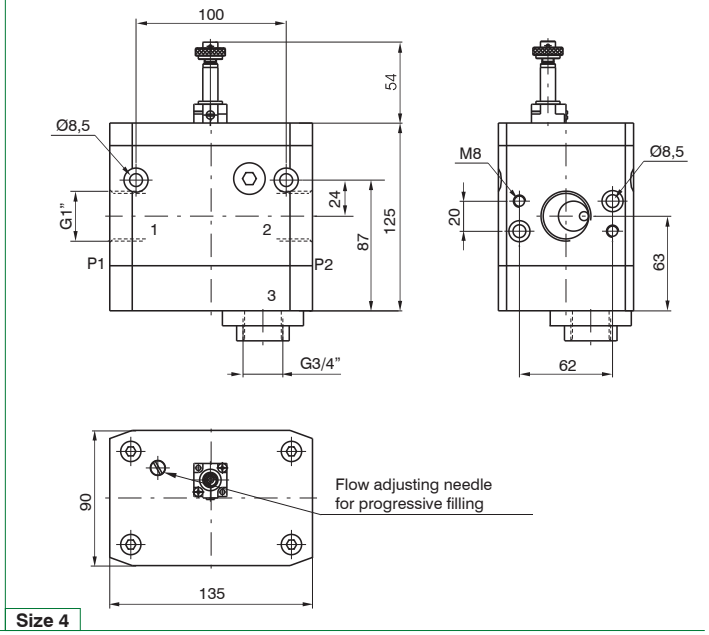

Size 4

Air Intake

- Pneumatic by-pass
- Available with 2 threaded connections

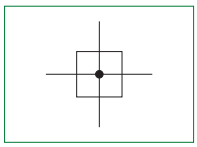

Technical characteristics	Size			
	Size 1	Size 2	Size 3	Size 4
Body and connections type	Aluminium body, integrated aluminium connections			
IN / OUT Connections	G1/4”	G3/8”	G1/2”	G1”
INTAKE connections	G1/8”	G1/4”	G3/8”	G3/4”
Assembly configuration	Stand alone	Stand alone	Stand alone	Stand alone
Assembly position	Indifferent			
Max. fittings torque IN / OUT connections	G1/4” metal: 20	G3/8” metal: 25	G1/2” metal: 30	G1”metal: 35

Operational characteristics	Size			
	Size 1	Size 2	Size 3	Size 4
Maximum working pressure (bar)	13			
Working temperature (°C)	-5 ÷ +50			

Weights	Size			
	Size 1	Size 2	Size 3	Size 4
Aluminium body version (g)	78	159	271	761

Overall dimensions and technical information are provided solely for informative purpose and may be modified without notice.

Order codes

17 **3** 40

Size, body and connections
1 : Aluminium body, connections G1/4” (only for size 1)
2 : Aluminium body, connections G3/8” (only for size 2)
3 : Aluminium body, connections G1/2” (only for size 3)
4 : Aluminium body, connections G1” (only for size 4)

Example: 17340
Air Intake Size 3, Aluminium body, G1/2” connections

Dimensions

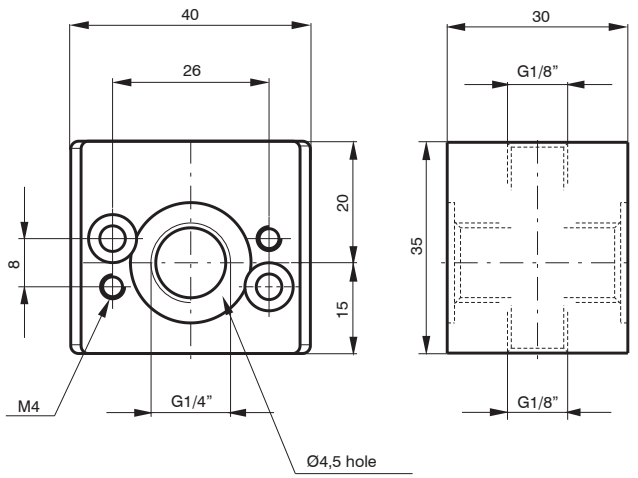

Size 1

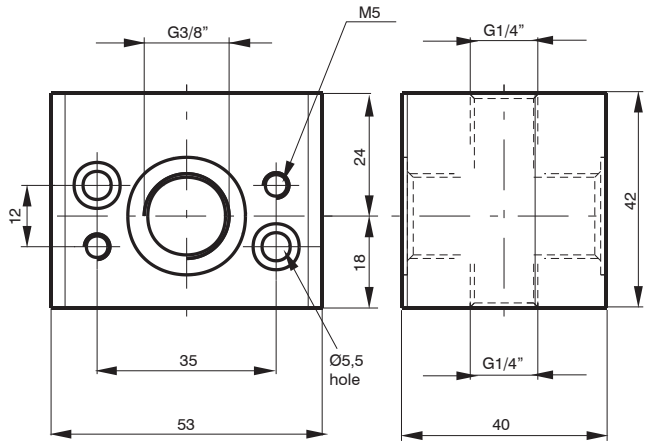

Size 2

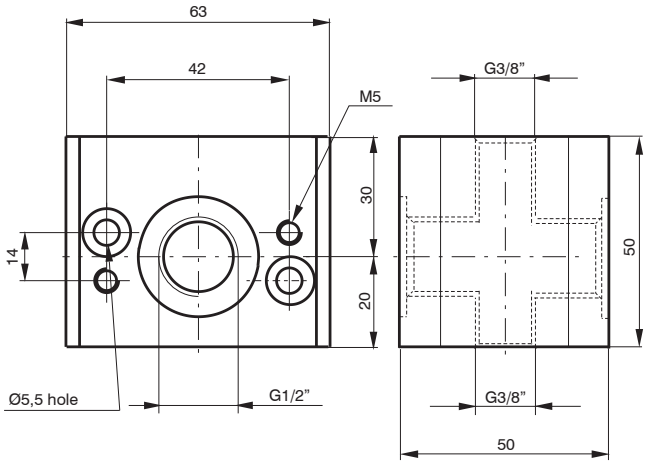

Size 3

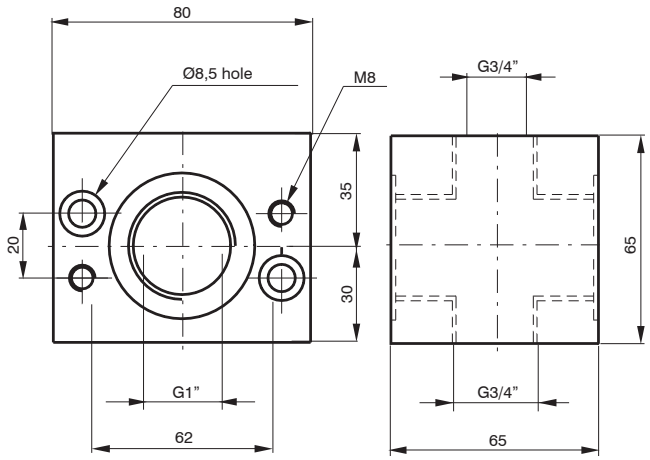

Size 4

Air Intake -"H" profile

- Pneumatic by-pass
- Available with 2 threaded connections

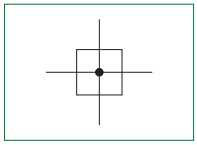

Technical characteristics	Size		
	Size 1	Size 2	Size 3
Body and connections type	Aluminium body		
IN / OUT Connections	G1/4"	G3/8"	G1/2"
INTAKE connections	G1/8"	G1/4"	G3/8"
Assembly configuration	Stand alone	Stand alone	Stand alone
Assembly position	Indifferent		
Max. fittings torque IN / OUT connections	G1/4" metal: 20	G3/8" metal: 25	G1/2" metal: 30

Operational characteristics	Size		
	Size 1	Size 2	Size 3
Maximum working pressure (bar)	13		
Working temperature (°C)	-5 ÷ +50		

Weights	Size		
	Size 1	Size 2	Size 3
Aluminium body version (g)	50	116	192

Overall dimensions and technical information are provided solely for informative purpose and may be modified without notice.

Order codes

17 | 3 | 40H

Size, body and connections
1 : Aluminium body, connections G1/4” (only for size 1)
2 : Aluminium body, connections G3/8” (only for size 2)
3 : Aluminium body, connections G1/2” (only for size 3)

Example: 17340H
Air Intake -“H” profile Size 3, Aluminium body, G1/2” connections

Dimensions

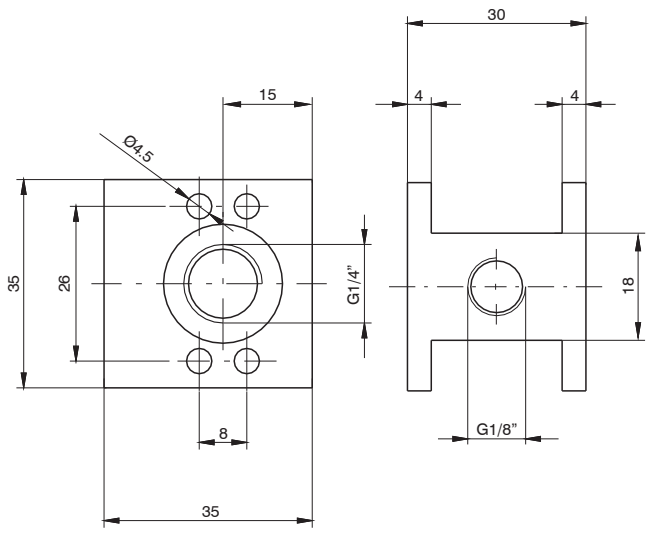

Size 1

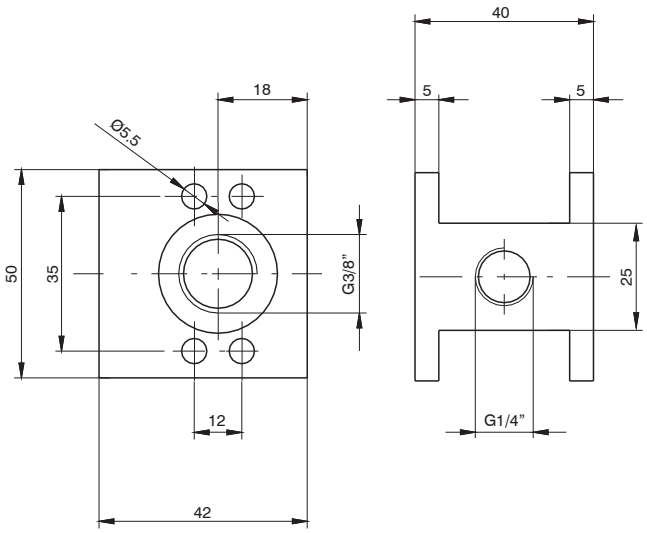

Size 2

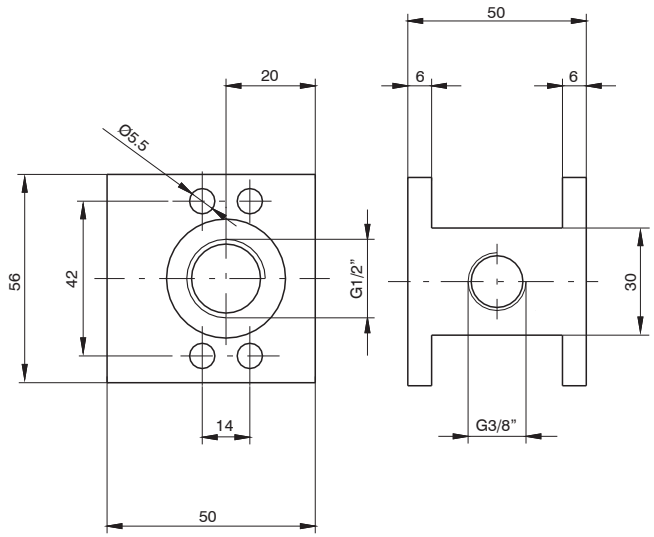

Size 3

Pressure Switch complete with adapter

- The pressure switch can be set at desired pressure from 2 to 10 bar with electrical connection applied
- The electrical connection is made by mean of a 15 mm connector DIN 43650 type C
- The microswitch contact could be Normally Closed or open (change over switch)

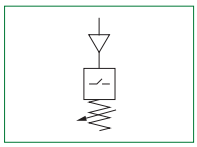

Technical characteristics	Size			
	Size 1	Size 2	Size 3	Size 4
Body and connections type	Aluminium body			
IN / OUT Connections	G1/8”	G3/8”	G1/2”	Ø36
Assembly configuration	Stand alone	Stand alone	Stand alone	Stand alone
Assembly position	Indifferent			
Microswitch capacity (A)	1			
Microswitch Maximum voltage (VAC)	250			
Grade of protection	IP65 (with connector assembled)			

Operational characteristics	Size			
	Size 1	Size 2	Size 3	Size 4
Maximum working pressure (bar)	13			
Working temperature (°C)	-5 ÷ +50			
Pressure range (bar)	2÷10			

Weights	Size			
	Size 1	Size 2	Size 3	Size 4
Aluminium body version (g)	160	200	220	450

Order codes

17 **34C**

Type
14A : Pressure switch adapter (only for size 1)
14B : Pressure switch (for all sizes)
14C : Pressure switch complete with adapter (only for size 1)
24A : Pressure switch adapter (only for size 2)
24C : Pressure switch complete with adapter (only for size 2)
34A : Pressure switch adapter (only for size 3)
34C : Pressure switch complete with adapter (only for size 3)
44A : Pressure switch adapter (only for size 4)
44C : Pressure switch complete with adapter (only for size 4)

Example: 1734C
Pressure switch adapter size 3

Overall dimensions and technical information are provided solely for informative purpose and may be modified without notice.

Electrical connection

1 = neutral
2 = N.C. contact
3 = N.O. contact

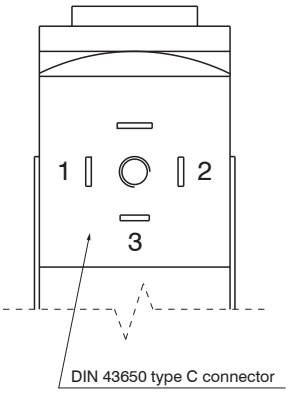

Dimensions

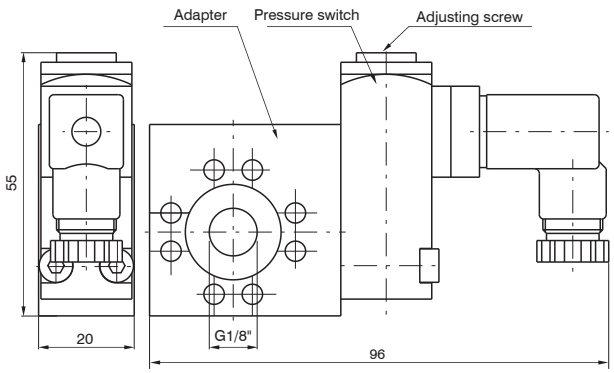

Size 1

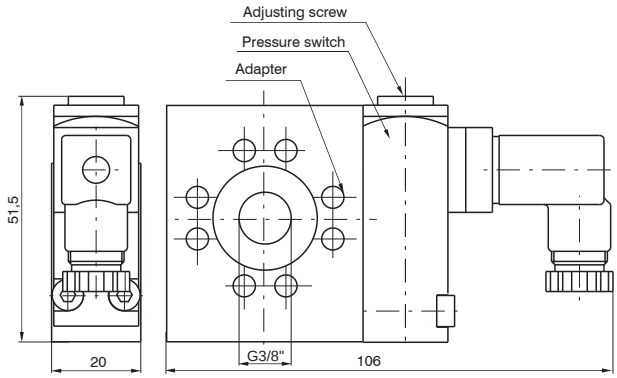

Size 2

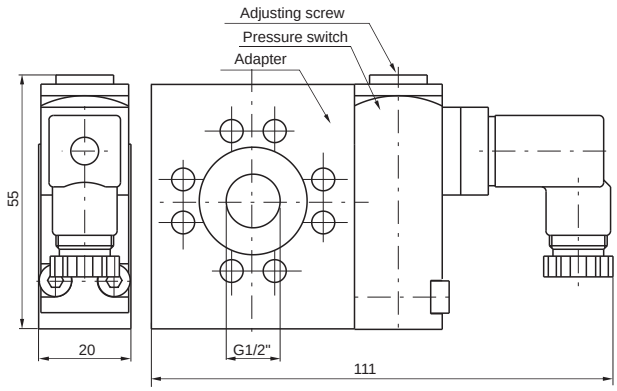

Size 3

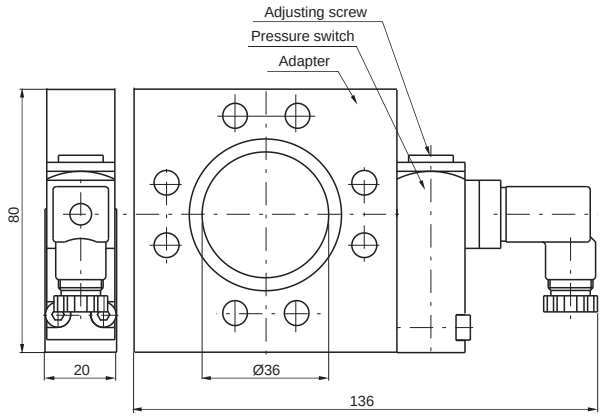

Size 4

Overall dimensions and technical information are provided solely for informative purpose and may be modified without notice.

Filter pressure regulator + Lubricator

- Filter - diaphragm pressure regulator with relieving
- Low histeresis rolling diaphragm and balanced spool
- Filtering element made of HDPE available in 3 different filtration grades (5µm, 20µm, 50µm)
- Semi-automatic or automatic drain
- Available in four pressure ranges up to 12 bar
- Oil mist lubricator
- Variable orifice size in function of the flow rate
- Oil quantity regulation mechanism and oil quantity visualization dome made of polycarbonate (PC)
- Oil refill plug
- Available with low level electrical sensor NO and NC
- Bowls screwed to the body (Size 1)
- Bowl assembly via bayonet type quick coupling mechanism with safety button (Size 2 - Size 3)
- Atex certification (II 2GD o II 3GD) on request

Technical characteristics	Size		
	Size 1	Size 2	Size 3
Body and connections type	Zinc alloy body, Zinc alloy integrated connections Technopolymer body, metal connections	Aluminium body, integrated aluminium connections	
Protection and bowl type	Technopolymer protection - PA bowl (Size 1 available without protection)		
IN / OUT connections	G1/8" - G1/4"	G1/4" - G3/8"	G3/8" - G1/2", G3/4"
Assembly configuration	Stand alone Panel mounted with M4 screws	Stand alone Panel mounted with M5 screws	Stand alone Panel mounted with M6 screws
Assembly position	Vertical ±5°		
Filter pore size (µm)	5 / 20 / 50		
Pressure range (bar)	0 - 2 / 0 - 4 / 0 - 8 / 0 - 12		
Bowl capacity (cm³)	20	30	48
Condensation drain	Semi-automatic Automatic		
Regulation	Manual push and lock with pressure Manual lockable with accessories		
Pressure measurement	G1/8" Pressure gauge connection port		
Bowl capacity (cm³)	36	52	62
Lubrication type	Oil mist		
Min.operational flow at 6,3 bar (Nl/min)	10	20	
Oil level regulation	Manual, complete with visual indicator		
Max. fittings torque IN / OUT connections	G1/8" metal: 15 G1/4" metal: 20	G1/4" metal: 20 G3/8" metal: 25	G3/8" metal: 25 G1/2" metal: 30 G3/4" metal: 35

Operational characteristics	Size					
	Size 1	Size 2	Size 3	Size 1	Size 2	Size 3
	Semi-automatic condensation drain			Automatic condensation drain		
Maximum working pressure (bar)	13			10		
Minimum working pressure (bar)	0,5					
Indicative oil drop rate (Nl/min)	1 drope every 300/600					
Oil type	FD22 - HG32					
Working temperature (°C)	-5 ÷ +50					

Overall dimensions and technical information are provided solely for informative purpose and may be modified without notice.

Weights	Size		
	Size 1	Size 2	Size 3
Zinc alloy body version (g)	560	/	/
Technopolymer body version (g)	295	/	/
Aluminium body version (g)	/	750	1100

Order codes

17 **306A** . **B** . **D** . **S** . **K**

Size, body and connections
006A : Zinc alloy body, connections G1/8” (only for size 1)
006B : Zinc alloy body, connections G1/4” (only for size 1)
106A : Technopolymer body, connections G1/8” (only for size 1)
106B : Technopolymer body, connections G1/4” (only for size 1)
206A : Aluminium body, connections G1/4” (only for size 2)
206B : Aluminium body, connections G3/8” (only for size 2)
306A : Aluminium body, connections G3/8” (only for size 3)
306B : Aluminium body, connections G1/2” (only for size 3)
306E : Aluminium body, connections G3/4” (only for size 3)

Filter pore size
A : 5 μm
B : 20 μm
C : 50 μm

Pressure range
A : 0 - 2 bar
B : 0 - 4 bar
C : 0 - 8 bar
D : 0 - 12 bar

Type
P : Bowl protection (only for size 1)
S : Automatic drain (for all sizes)
PS : Bowl protection and automatic drain (only for size 1)

Options
: Standard
K : Lockable version
U : Lockable version with universal key

Example: 17306A.B.D.S.K
Size 3 Filter pressure regulator + Lubricator, aluminium body, G3/8” connections, filter pore size 20 μm 0 - 12 bar, automatic drain lockable version

Dimensions

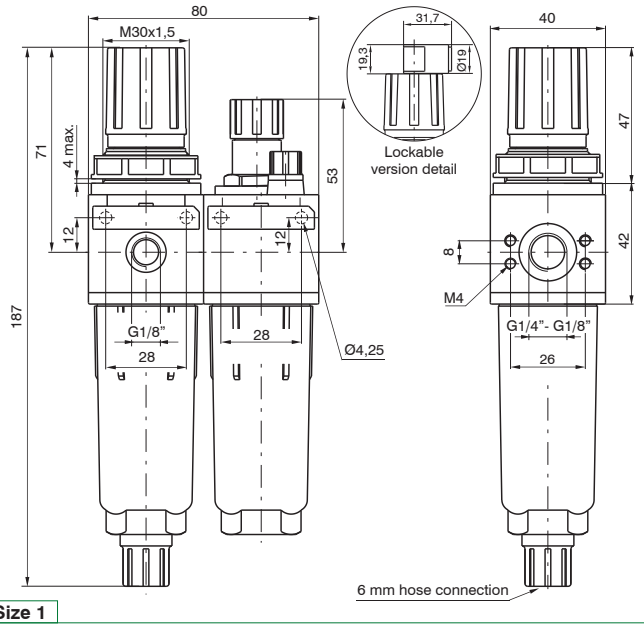

Size 1

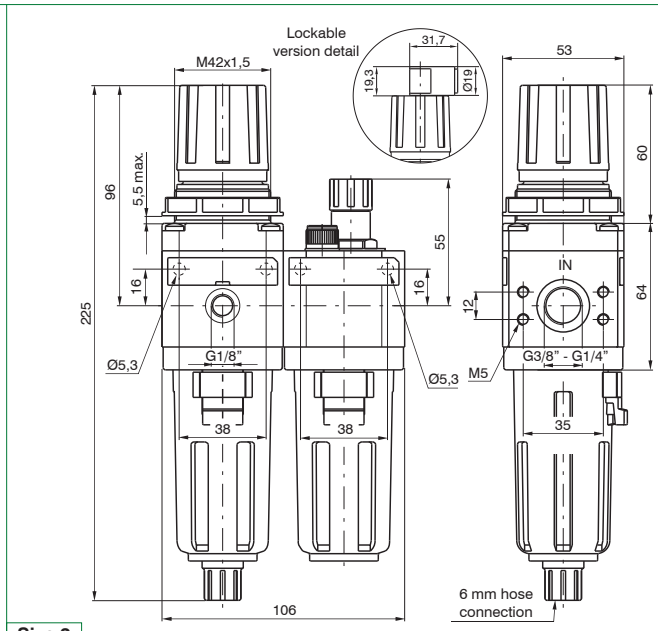

Size 2

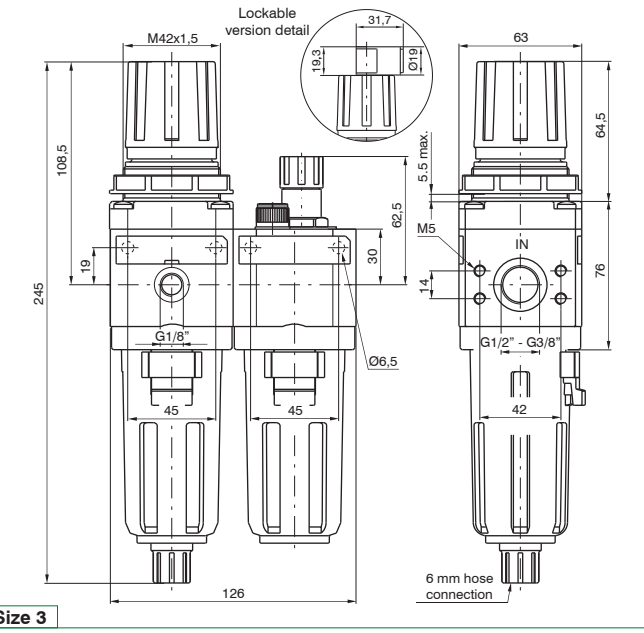

Size 3

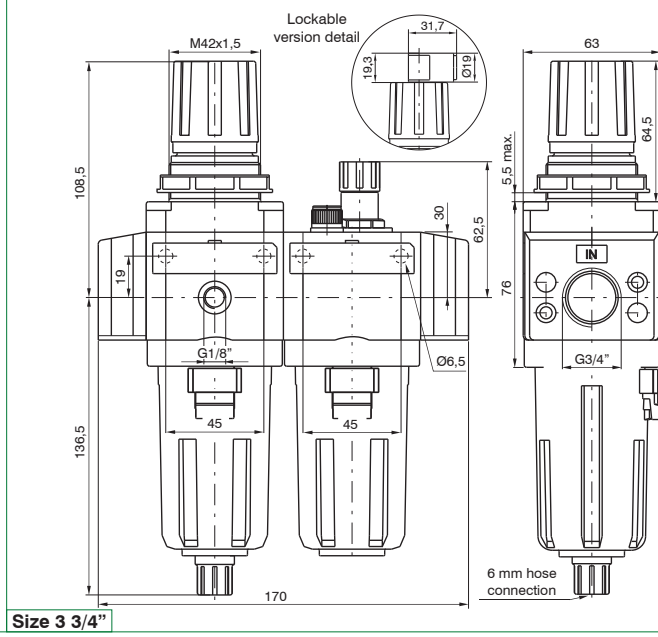

Size 3 3/4"

Overall dimensions and technical information are provided solely for informative purpose and may be modified without notice.

Characteristic curves

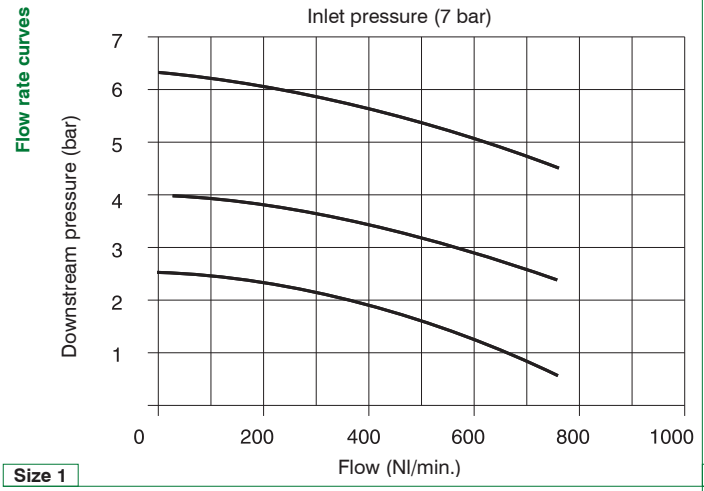

Size 1

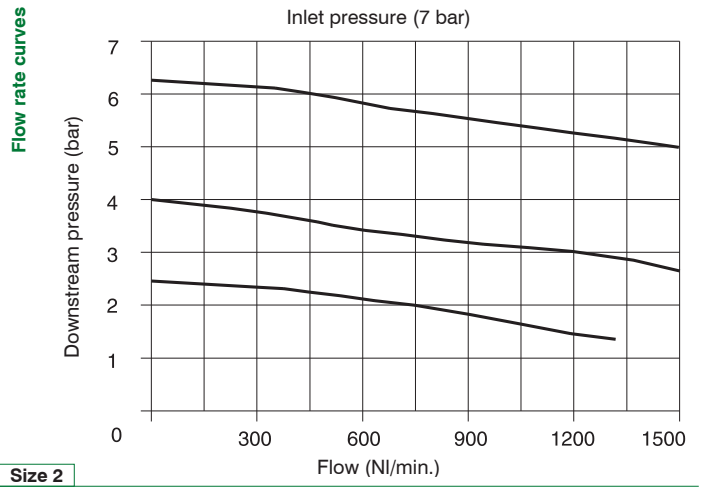

Size 2

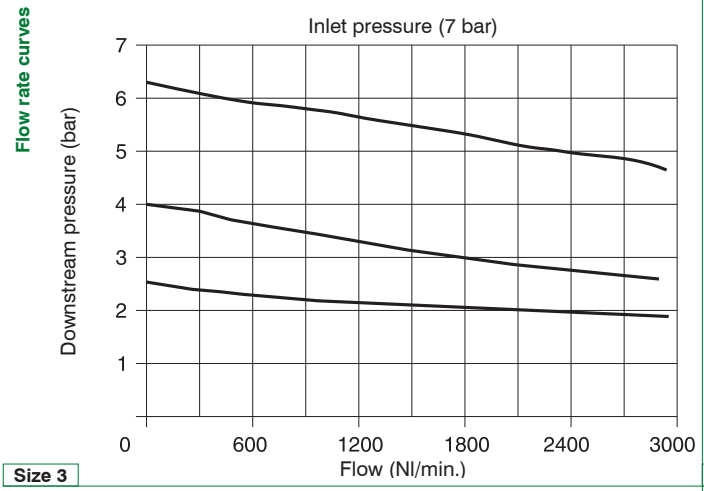

Size 3

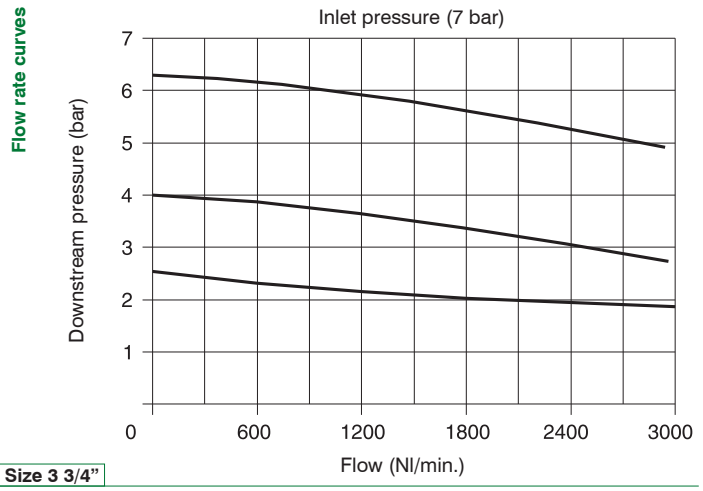

Size 3 3/4"

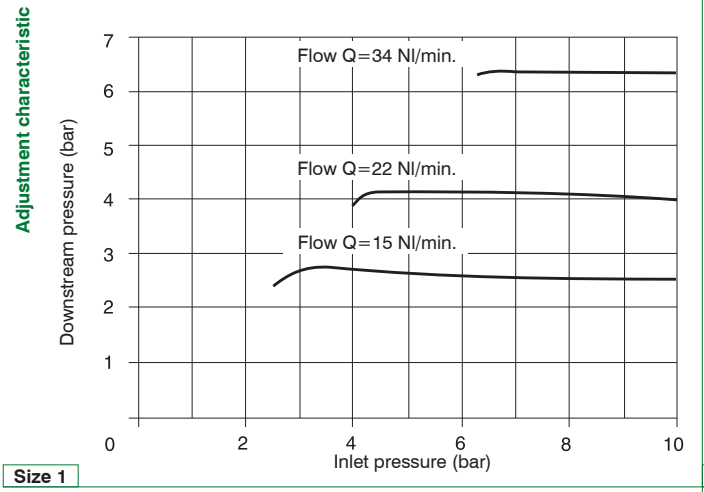

Size 1

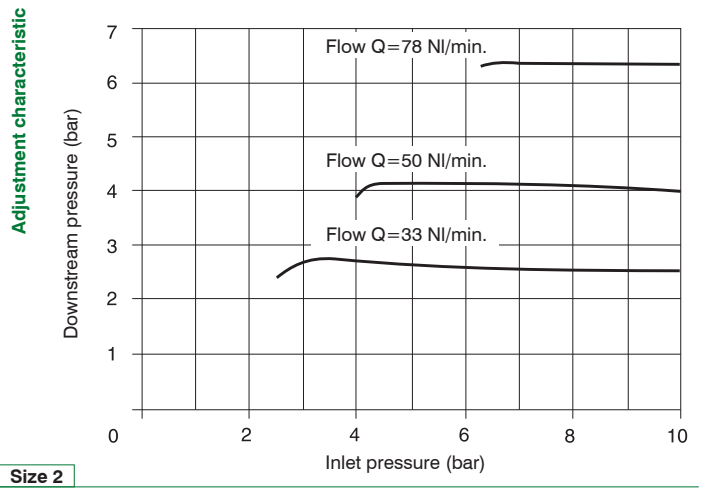

Size 2

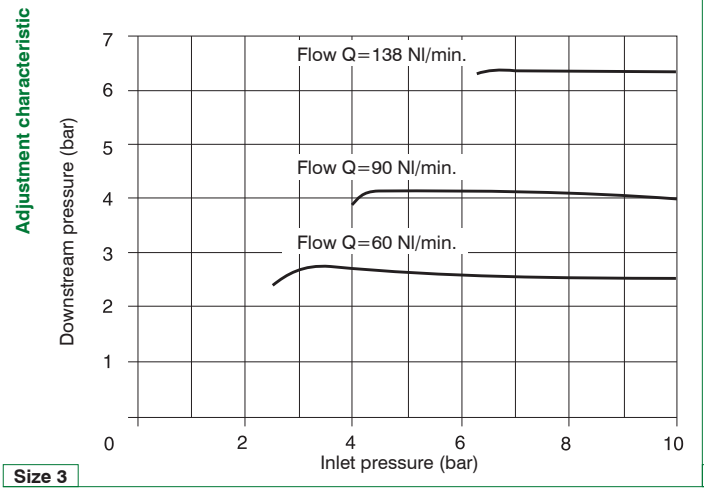

Size 3

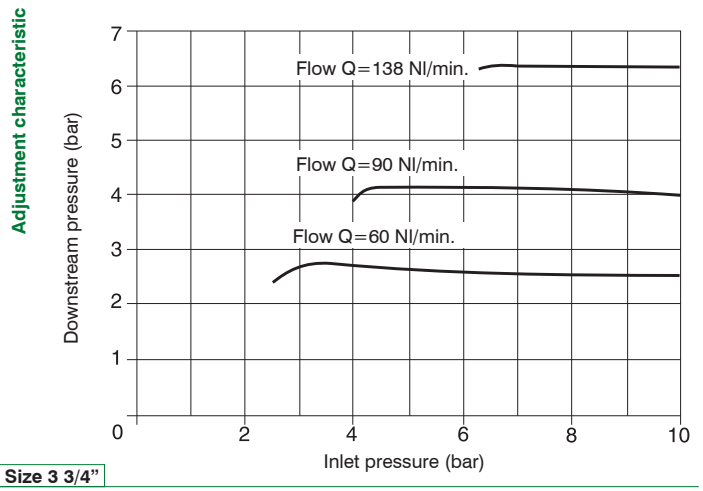

Size 3 3/4"

Overall dimensions and technical information are provided solely for informative purpose and may be modified without notice.

Filter + Pressure regulator + Lubricator

- Double filter action: air flow centrifugation and filter element
- Filtering cartridge made of HDPE available in three different filtration grades (5µm, 20µm, 50µm)
- Filter cartridge can be regenerated by washing / blowing it or replaced
- Semi-automatic or automatic drain
- Diaphragm pressure regulator with relieving
- Low histeresis rolling diaphragm and balanced spool
- Available in four pressure ranges up to 12 bar
- Oil mist lubricator
- Variable orifice size in function of the flow rate
- Oil quantity regulation mechanism and oil quantity visualization dome made of polycarbonate (PC)
- Oil refill plug
- Available with low level electrical sensor NO and NC
- Bowls screwed to the body (Size 1)
- Bowl assembly via bayonet type quick coupling mechanism with safety button (Size 2 - Size 3 - Size 4)
- Atex certification (II 2GD o II 3GD) on request

Technical characteristics	Size			
	Size 1	Size 2	Size 3	Size 4
Body and connections type	Zinc alloy body, Zinc alloy integrated connections Technopolymer body, metal connections	Aluminium body, integrated aluminium connections		
Protection and bowl type	Technopolymer protection - PA bowl (Size 1 available without protection)			Metal bowl with blind metal bowl
IN / OUT connections	G1/8" - G1/4"	G1/4" - G3/8"	G3/8" - G1/2", G3/4"	G1"
Assembly configuration	Stand alone Panel mounted with M4 screws	Stand alone Panel mounted with M5 screws	Stand alone Panel mounted with M6 screws	Stand alone Panel mounted with M6 screws
Assembly position	Vertical ±5°			
Filter pore size (µm)	5 / 20 / 50			
Pressure range (bar)	0 - 2 / 0 - 4 / 0 - 8 / 0 - 12			
Bowl capacity (cm³)	20	30	48	178
Condensation drain	Semi-automatic Automatic			
Regulation	Manual push and lock with pressure Manual lockable with accessories			
Pressure measurement	G1/8" Pressure gauge connection port			
Bowl capacity (cm³)	36	52	62	300
Lubrication type	Oil mist			
Min.operational flow at 6,3 bar (Nl/min)	10	20		100
Oil level regulation	Manual, complete with visual indicator			
Max. fittings torque IN / OUT connections	G1/8" metal: 15 G1/4" metal: 20	G1/4" metal: 20 G3/8" metal: 25	G3/8" metal: 25 G1/2" metal: 30 G3/4" metal: 35	G1"metal: 35

Operational characteristics	Size							
	Size 1	Size 2	Size 3	Size 4	Size 1	Size 2	Size 3	Size 4
	Semi-automatic condensation drain				Automatic condensation drain			
Maximum working pressure (bar)	13				10			
Minimum working pressure (bar)	0,5							
Indicative oil drop rate (Nl/min)	1 drope every 300/600							
Oil type	FD22 - HG32							
Working temperature (°C)	-5 ÷ +50							

Overall dimensions and technical information are provided solely for informative purpose and may be modified without notice.

Weights	Size			
	Size 1	Size 2	Size 3	Size 4
Zinc alloy body version (g)	755	/	/	/
Technopolymer body version (g)	375	/	/	/
Aluminium body version (g)	/	960	1430	5300

Order codes

17 | 307A | . | B | . | D | . | S | . | K |

Size, body and connections
007A : Zinc alloy body, connections G1/8” (only for size 1)
007B : Zinc alloy body, connections G1/4” (only for size 1)
107A : Technopolymer body, connections G1/8” (only for size 1)
107B : Technopolymer body, connections G1/4” (only for size 1)
207A : Aluminium body, connections G1/4” (only for size 2)
207B : Aluminium body, connections G3/8” (only for size 2)
307A : Aluminium body, connections G3/8” (only for size 3)
307B : Aluminium body, connections G1/2” (only for size 3)
307E : Aluminium body, connections G3/4” (only for size 3)
407NB : Aluminium body, connections G1” (only for size 4)

Filter pore size
A : 5 μm
B : 20 μm
C : 50 μm

Pressure range
A : 0 - 2 bar
B : 0 - 4 bar
C : 0 - 8 bar
D : 0 - 12 bar

Type
P : Bowl protection (only for size 1)
S : Automatic drain (for all sizes)
PS : Bowl protection and automatic drain (only for size 1)

Options
: Standard
K : Lockable version
U : Lockable version with universal key

Example: 17307A.B.D.S.K
Size 3 Filter + Pressure regulator + Lubricator, aluminium body, G3/8” connections, filter pore size 20 μm 0 - 12 bar, automatic drain lockable version

Dimensions

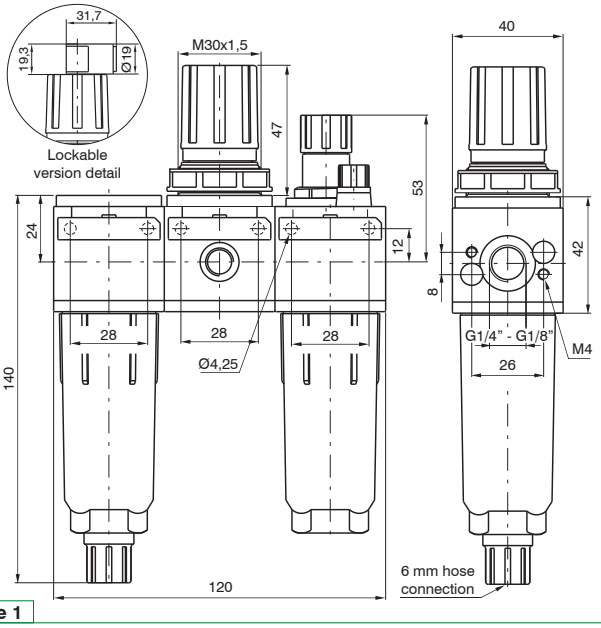

Size 1

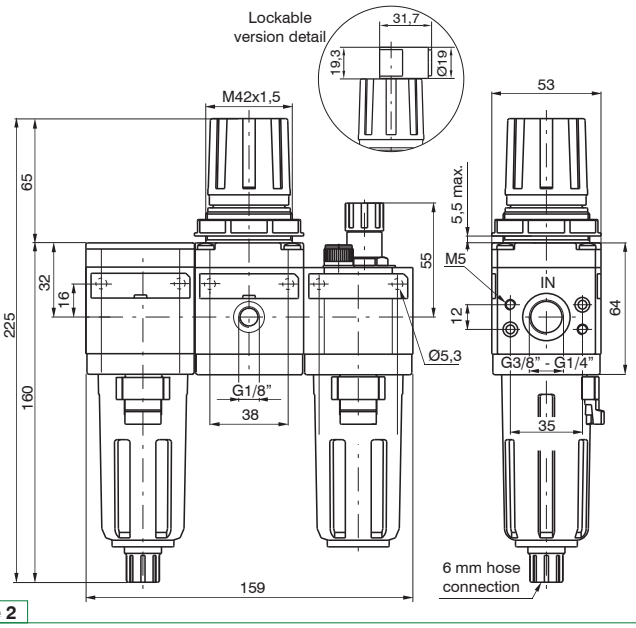

Size 2

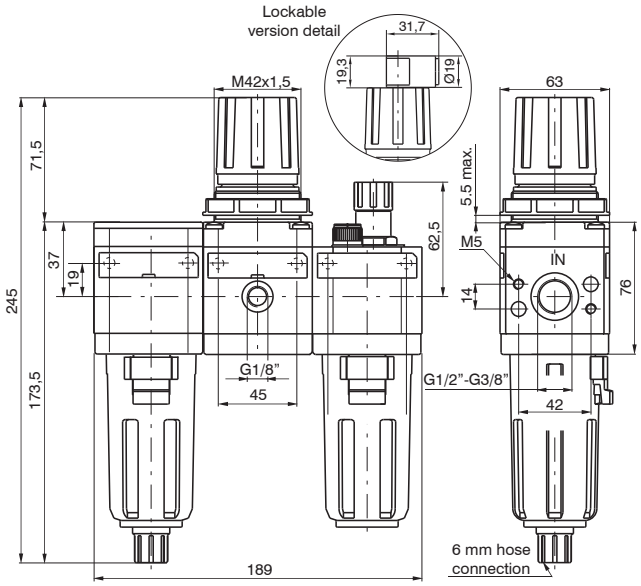

Size 3

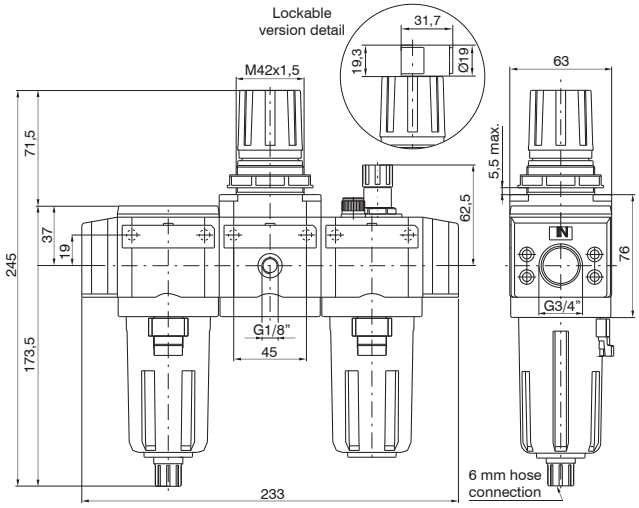

Size 3 3/4"

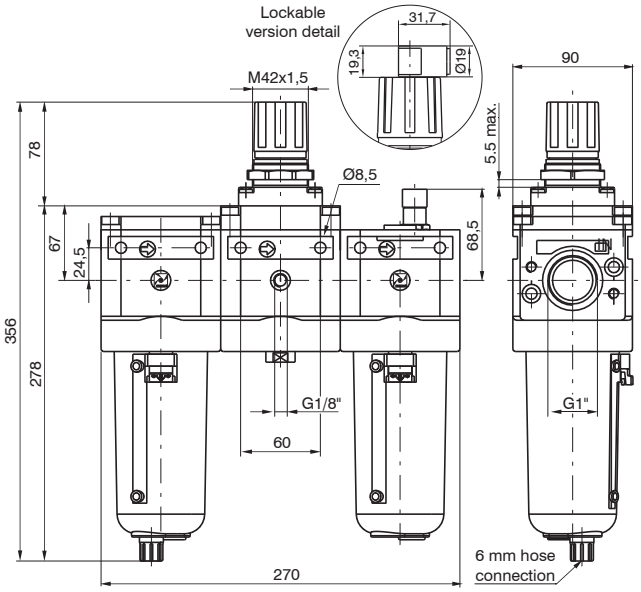

Size 4

Overall dimensions and technical information are provided solely for informative purpose and may be modified without notice.

Characteristic curves

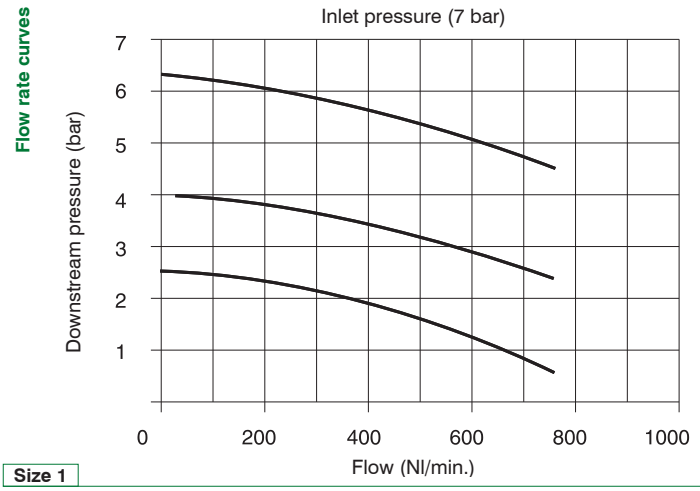

Size 1

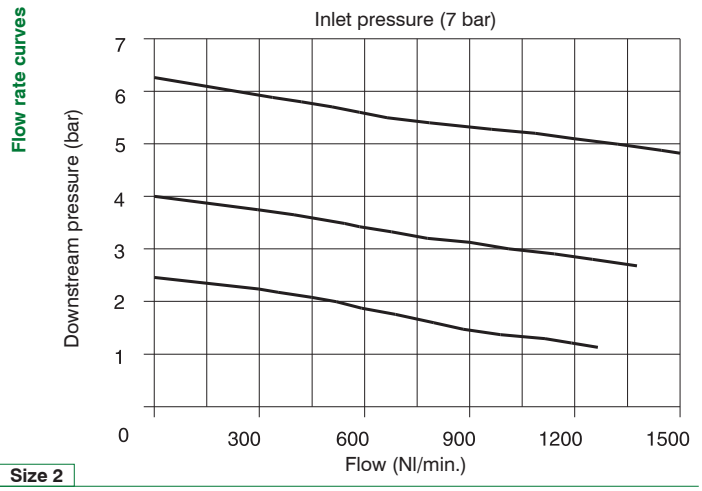

Size 2

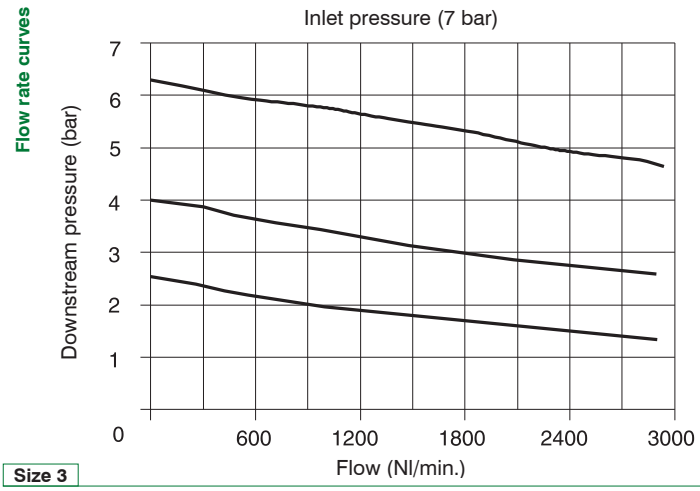

Size 3

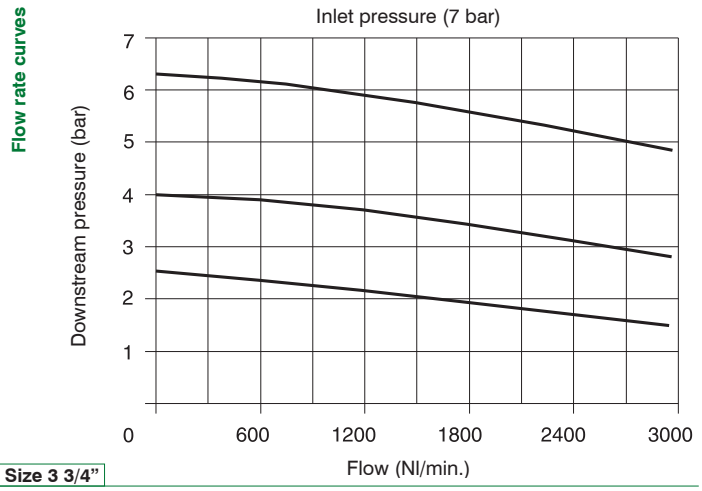

Size 3 3/4"

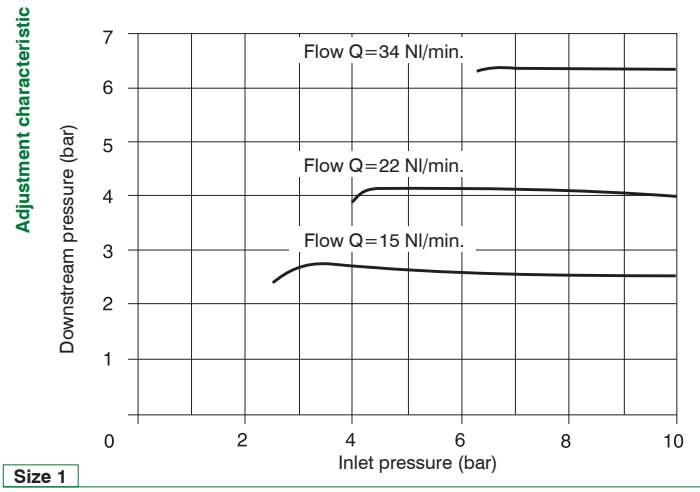

Size 1

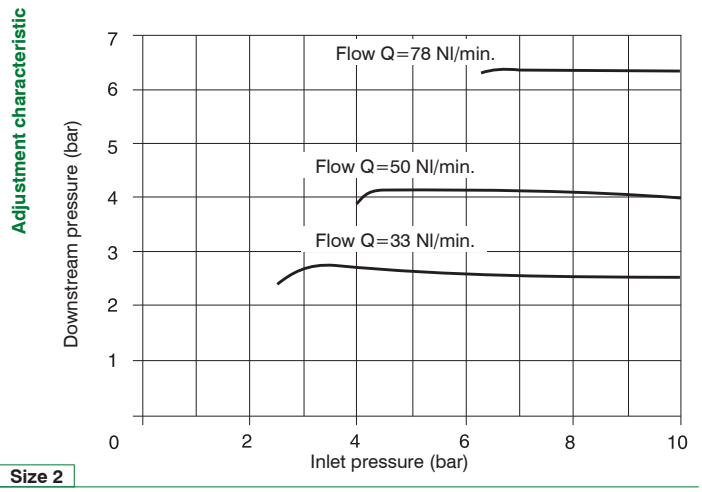

Size 2

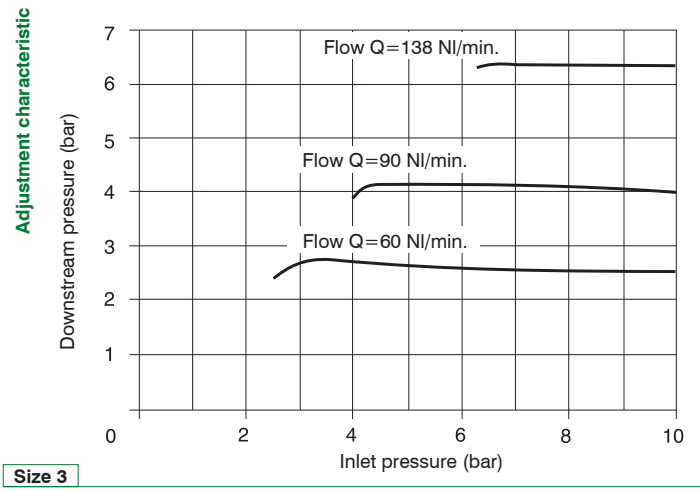

Size 3

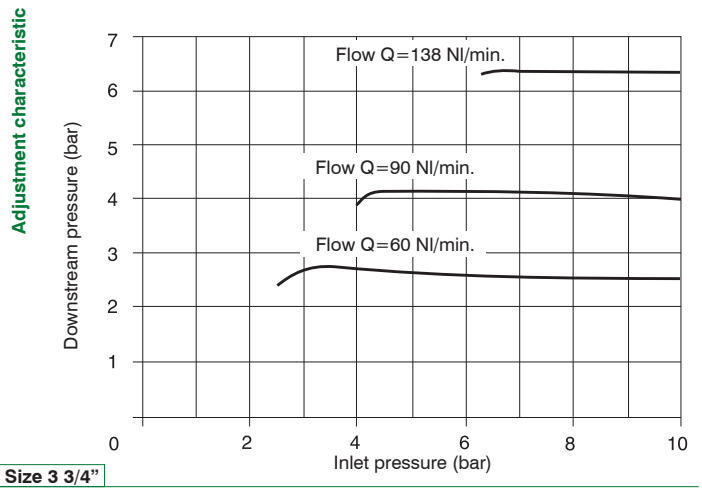

Size 3 3/4"

Overall dimensions and technical information are provided solely for informative purpose and may be modified without notice.

Fixing bracket for regulators

1725	0

Size
1725 : Size 2
1735 : Size 3

Type
0 : For standard regulators
2 : For pressure regulators

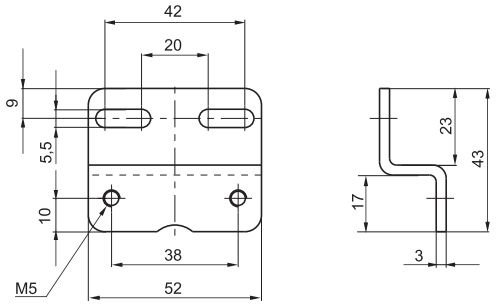

Size 2

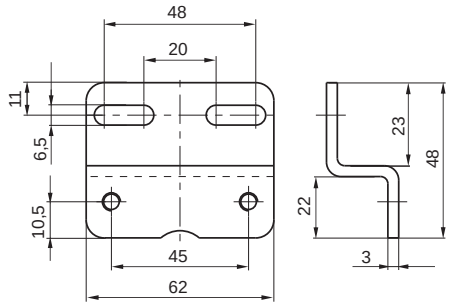

Size 3

Fixing bracket

171	50

Size
171 : Size 1
T172 : Size 2 - Size 3

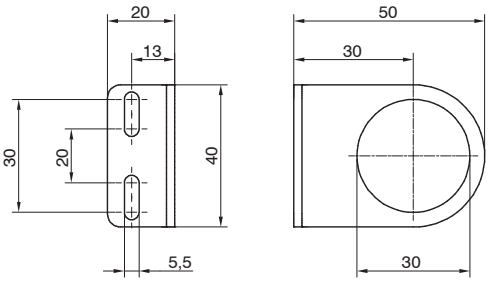

Size 1

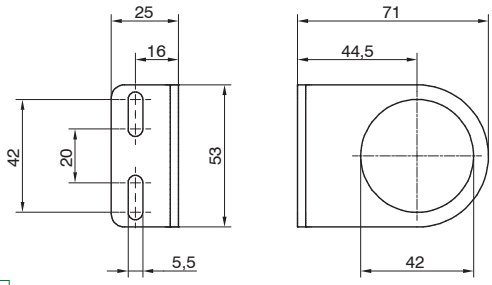

Size 2 - TG3

Fixing bracket

170	M5

Size
170 : Size 1

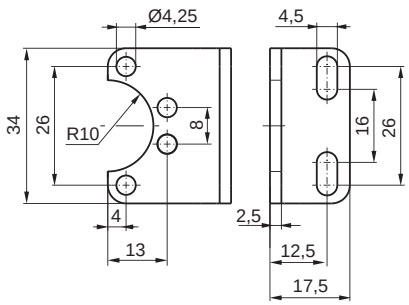

Size 1

Overall dimensions and technical information are provided solely for informative purpose and may be modified without notice.

Fixing bracket for pressure regulator

170 **50**

Size
170 : Size 1

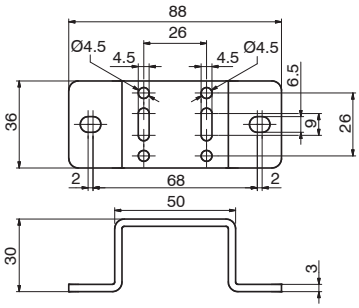

Size 1

Pressure gauge

17070 **A** **C**

Versione
A : Dial Ø40
B : Dial Ø50

Scala
A : 0 - 4 bar
B : 0 - 6 bar
C : 0 - 12 bar

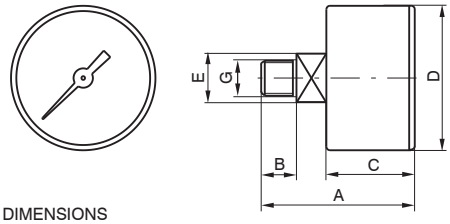

DIMENSIONS

CODE	A	B	C	D	E	G	Weight g
17070A	44	10	26	41	14	1/8”	60
17070B	45	10	27	49	14	1/8”	80

Pressure gauge diameter Ø23

17070M **A**

Scala
A : 0 - 4 bar
B : 0 - 6 bar
C : 0 - 12 bar

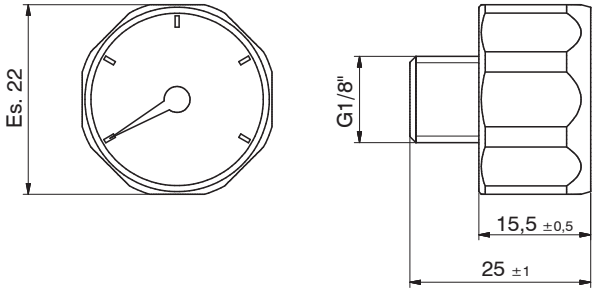

Assembling kit

1726	0

Size
1716 : Size 1
1726 : Size 2
1736 : Size 3
1746 : Size 4

Type
0 : Standard
5 : For progressive start-up valve

Assembling kit for manifold regulators

170	M6

Size
170 : Size 1

Flange G3/4”

1738	1E

Size
1738 : Size 3

Type
1E : Inlet flange
2E : Output flange

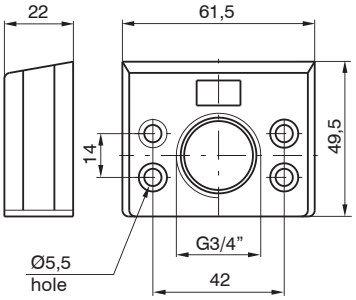

Size 3

Overall dimensions and technical information are provided solely for informative purpose and may be modified without notice.

Modular FRL series 1700 Steel line

General

The stainless steel SS1700 air treatment series has been engineered and developed to approach specifically the OIL & GAS industry and more widely for all the severe service applications that require excellent corrosion resistance due to chemical and/or harsh environmental condition. **All external and internal parts (except for the automatic drain version) are AISI 316L stainless steel material in compliance with NACE standard MR0175/ISO 15156/1**. The product range includes FILTER, with filtration elements up to 3 filtration degree (5μm-20μm-50μm), available in AISI316 stainless steel or HDPE (high density polyethylene), and manual or automatic condensed exhaust; The PRESSURE REGULATOR is supplied with low hysteresis rolling diaphragm and an over-pressure exhaust valve (RELIEVING), available in 4 different adjustment ranges from 0 to 12 bar. As a last the FILTER REGULATOR range, which combines the features of a filter and pressure regulator into a one single device. “CLEAN PROFILE” version is available for all the sizes, featuring a glossy finish on the external surface. The over-pressure exhaust hole (RELIEVING) has a 1/8” NPT threading, and it is protected by an AISI 316 sintered filter series. Note: for CLEAN PROFILE series this is a simple unthread hole.

Construction and operational characteristics

Body, bowl and adjustment mechanism	AISI 316L stainless steel
Caseback regulator	AISI 316L stainless steel
Adjustment screw, locking nut and fastening screws	AISI 316L stainless steel (stainless steel A4-70)
Internal components	AISI 316L stainless steel
Filtering elements	AISI 316 stainless steel or HDPE (High density polyethylene)
Spring	AISI 316 stainless steel
Seals	

NBR (standard versions and automatic drain)	NBR for low temperatures (L versions)	Silicone - PU (Z version)
FPM - HNBR (H versions)	EPDM-FDA (EF versions)	

Automatic drain	Brass, stainless steel AISI 304 and AISI 302, sintered bronze Acetal resin , NBR, FPM

Operating Range

Fluid	Filtered air. No lubrication needed, if applied it shall be continuous. Inert gases. Natural gases

Temperature

-30°C +80°C (standard version)	-5°C +150°C (high temperature H version)	-40°C ÷ +100°C (EPDM-FDA version)
-50°C +80°C (low temperature L version)	-5°C ÷ +70°C (automatic drain S version)	
-60°C +80°C (low temperature version -60 °C Z)	-5°C ÷ +70°C (reduced orifice automatic drain SR version)	

Maximum working pressure

20 bar (standard, low and high temperature versions)	16 bar (automatic drain version)	10 bar (reduced orifice automatic drain version)

Instructions for installation and use

Product shall be installed reducing the distance from inlet point. Check and install the device following the flow direction (clearly marked with an arrow stamped on the body). Vertical position installation with condensed exhaust tap pointing downward is recommended.
Devices must be used in compliance with pressure and temperature operating range. To set the pressure there is an adjustable knob, located on the top of the device. Pneumax recommend selection of pressure regulator adjusting range option in line with client required performance The condensed exhaust action for the manual drain version shall be performed only in the absence of pressure. To discharge liquid, turn the tap clockwise until the discharge of liquid is triggered, then tighten it all the way.

Maintenance

Filtration elements and filter regulator are reusable through blowing and/or washing and is made of stainless steel or HDPE (high density polyethylene). To replace, remove the cup, loosen the set screw of the support and replace the filter element with a new one or refurbished one. Replace the regulator diaphragm whenever the performance is compromised or if there is a continuous discharge from the relieving hole (over-pressure exhaust). Fully discharge the adjustment spring before removing the adjustment mechanism. For other maintenance activities, due to complexity of assembly and requirement for dedicated **PNEUMAX** testing activities, it is strongly recommended to contact the manufacturer.

Certifications available

Ex : CE Ex **II 2 GD c IIC**

CE Ex **II 2G Ex h IIC Gb**
CE Ex **II 2D Ex h IIIC Db**

SIL : Suitable up to SIL 3

EAC Ex : CU - TR 012

Filters

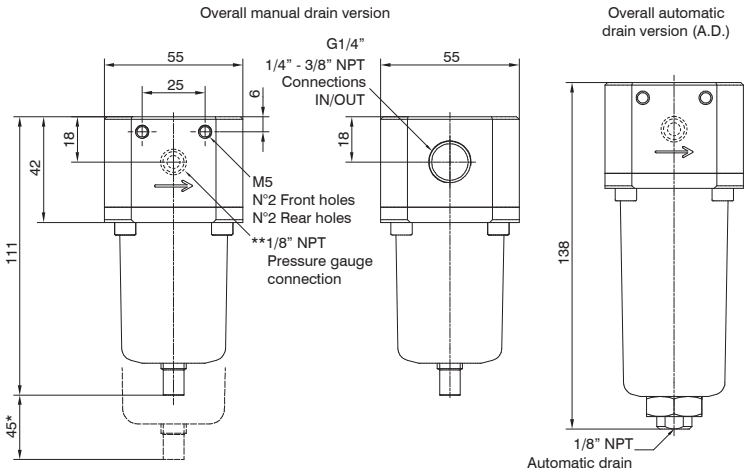

* = BOWL REMOVAL MAXIMUM HEIGHT
** = ONLY FOR VERSION WITH PRESSURE GAUGE CONNECTION

Ordering code	
SⓋ172ⒸFⓈⓄⓏ	
	VERSION
Ⓥ	S = Standard surface finishing
	F = Clean profile
	CONNECTIONS
Ⓒ	A = 1/4" NPT
	B = 3/8" NPT
	C = G1/4"
	FILTER PORE SIZE
	A = 5 μm - 316 stainless steel
	B = 20 μm - 316 stainless steel
Ⓢ	C = 50 μm - 316 stainless steel
	D = 5 μm - HDPE
	E = 20 μm - HDPE
	F = 50 μm - HDPE
	OPTIONS
	= Standard*
	L = Low temperature
	Z = Low temperature (-60 °C)
Ⓞ	H = High temperature
	S = Automatic drain
	SR = Reduced orifice automatic drain
	EF = EPDM-FDA
	ENCLOSURE OPTIONS
Ⓩ	= Standard*
	G = pressure gauge connection
* no additional letter required	

Construction characteristics
- Body, bowl and internal components in AISI 316L stainless steel.
- A4 (AISI 316) stainless steel fixing screws.
- Manual or automatic condensed drain

Technical characteristics	
Maximum inlet pressure (standard version)	20 bar
Maximum inlet pressure (automatic drain version)	16 bar
Maximum inlet pressure (reduced orifice automatic drain version)	10 bar
Temperature (standard version)	-30°C +80°C
Temperature (low temperature version)	-50°C +80°C
Temperature (low temperature version -60°C)	-60°C +80°C
Temperature (high temperature version)	-5°C +150°C
Temperature (automatic and reduced orifice drain version)	-5°C +70°C
Temperature (EPDM-FDA version)	-40°C +100°C
Weight	1070 (gr.)
Bowl capacity	15 cm^3
Assembly position	Vertical

Flow rate chart

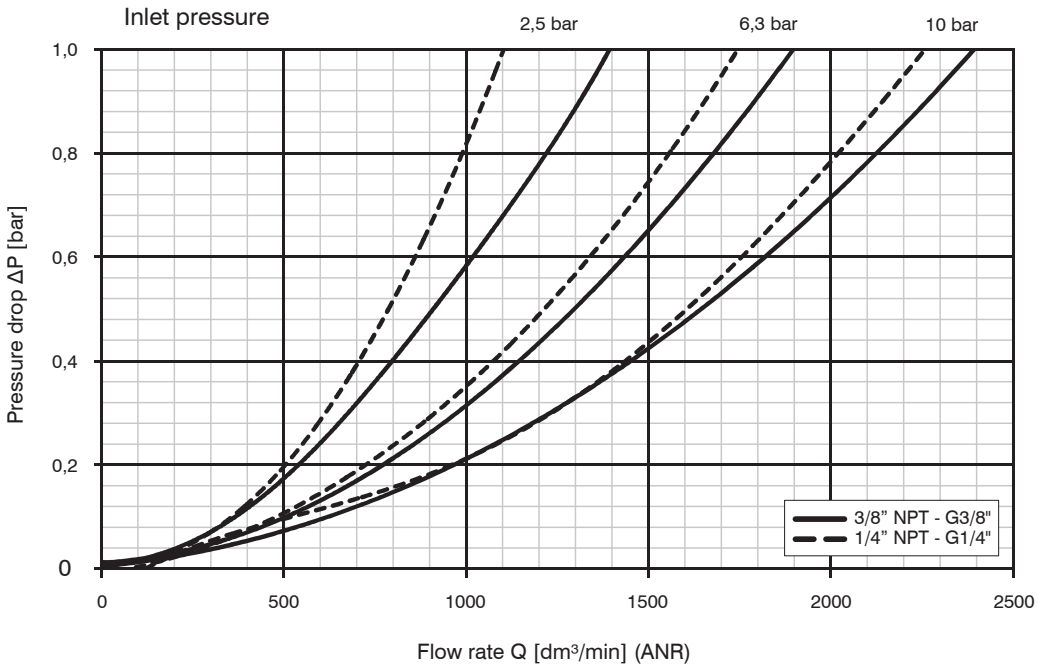

Overall dimensions and technical information are provided solely for informative purposes and may be modified without notice

Regulators

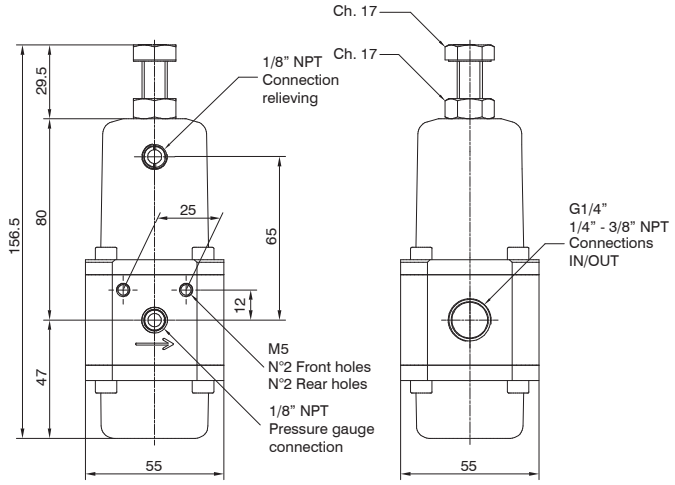

Ording code	
S V 172 C R G T O	
V	VERSION
	S = Standard surface finishing
	F = Clean profile
C	CONNECTIONS
	A = 1/4" NPT
	B = 3/8" NPT
	C = G1/4"
G	PRESSURE RANGE
	A = 0-2 bar
	B = 0-4 bar
	C = 0-8 bar
	D = 0-12 bar
T	TYPE
	= Standard*
	N = Without relieving
O	OPTIONS
	= Standard*
	L= Low temperature
	Z = Low temperature (-60 °C)
	H= High temperature
	EF= EPDM-FDA
* no additional letter required	

Construction characteristics

- Body, adjust. mechanism, AISI 316L stainless steel and caseback inter. components
- AISI 316 stainless steel adjustment springs.
- Fixing screws, adjustment screws and locknut in A4 (AISI 316) stainless steel.
- Pressure regulator diaphragm with over-pressure drain (Relieving).
- Low hysteresis rolling diaphragm.
- Balanced system.

Note

The pressure must be always regulating while increasing. For a more precise regulation and higher sensibility, the use of a regulator with a pressure range as close as possible to the regulated pressure is recommended.

Technical characteristics

Maximum inlet pressure (standard version)	20 bar
Temperature (standard version)	-30 °C +80 °C
Temperature (low temperature version)	-50 °C +70 °C
Temperature (low temperature version -60°C)	-60 °C +70 °C
Temperature (high temperature version)	-5 °C +150 °C
Temperature (EPDM-FDA version)	-40 °C +100 °C
Pressure gauge connections	1/8" NPT
Weight	1270 (gr.)
Assembly position	Indifferent

Flow rate chart

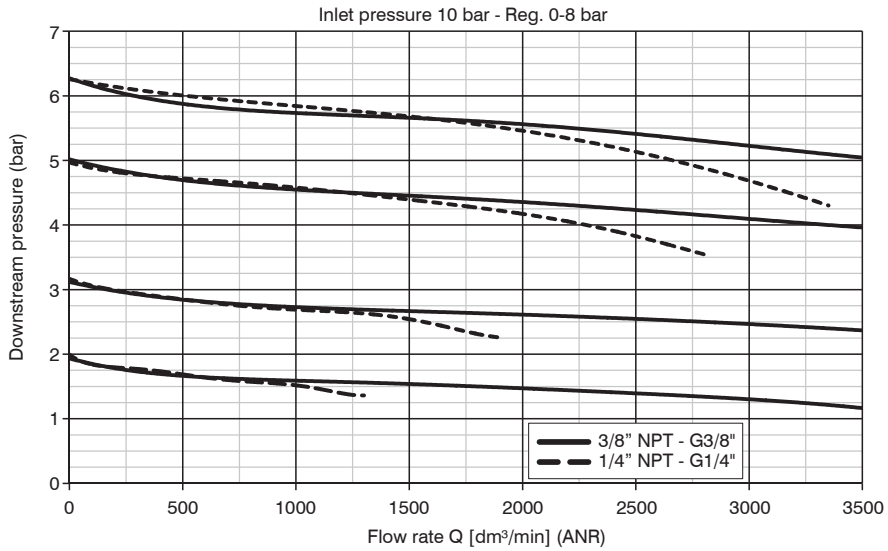

Pressure regulator Stainless steel line have been designed to withstand **a 60 Bar** maximum inlet pressure.
Maximum regulated outlet pressure is 20 Bar.
For performance details please refer to diagram alongside.

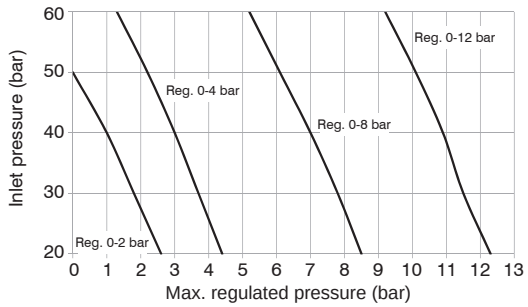

Filter regulators

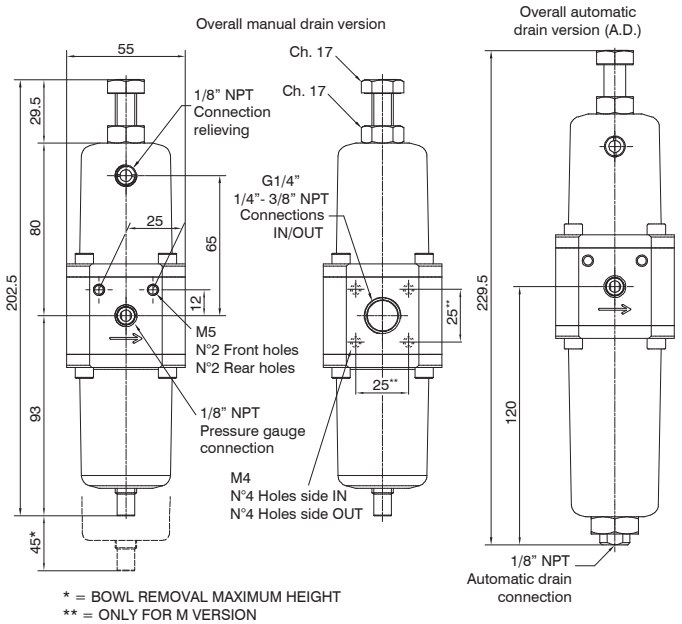

Ordering code

SV172CESGTO

V	VERSION
	S = Standard surface finishing
	F = Clean profile
	M = Modular assembly version
C	CONNECTIONS
	A = 1/4" NPT
	B = 3/8" NPT
	C = G1/4"
S	FILTER PORE SIZE
	A = 5 μm - 316 stainless steel
	B = 20 μm - 316 stainless steel
	C = 50 μm - 316 stainless steel
	D = 5 μm - HDPE
	E = 20 μm - HDPE
	F = 50 μm - HDPE
G	PRESSURE RANGE
	A = 0-2 bar
	B = 0-4 bar
	C = 0-8 bar
	D = 0-12 bar
T	TYPE
	= Standard*
	N = Without relieving
O	OPTIONS
	= Standard*
	L = Low temperature
	Z = Low temperature (-60 °C)
	H = High temperature
	S = Automatic drain
	SR = Reduced orifice automatic drain
	EF = EPDM-FDA

* no additional letter required

Construction characteristics

- Body, adjust. mechanism, AISI 316L stainless steel and caseback inter. components
- AISI 316 stainless steel adjustment springs.
- Fixing screws, adjustment screws and locknut in A4 (AISI 316) stainless steel.
- Filter-pressure regulator diaphragm with over-pressure drain (Relieving).
- Low hysteresis rolling diaphragm.
- Balanced system.
- Manual or automatic condensed drain.

Note

The pressure must be always regulating while increasing. For a more precise regulation and higher sensibility, the use of a regulator with a pressure range as close as possible to the regulated pressure is recommended.

Technical characteristics

Maximum inlet pressure (standard version)	20 bar
Maximum inlet pressure (automatic drain version)	16 bar
Maximum inlet pressure (reduced orifice automatic drain version)	10 bar
Temperature (standard version)	-30°C +80°C
Temperature (low temperature version)	-50°C +80°C
Temperature (low temperature version -60°C)	-60°C +80°C
Temperature (high temperature version)	-5°C +150°C
Temperature (automatic and reduced orifice drain version)	-5°C +70°C
Temperature (EPDM-FDA version)	-40°C +100°C
Pressure gauge connections	1/8" NPT
Weight	1470 (gr.)
Bowl capacity	15 cm³
Assembly position	Vertical

Flow rate chart

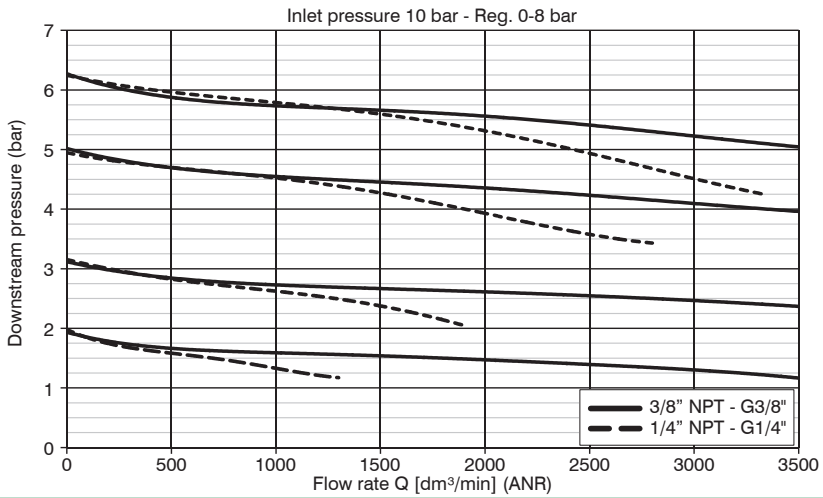

Pressure regulator Stainless steel line have been designed to withstand **a 60 Bar** maximum inlet pressure.
Maximum regulated outlet pressure is 20 Bar.
For performance details please refer to diagram alongside.

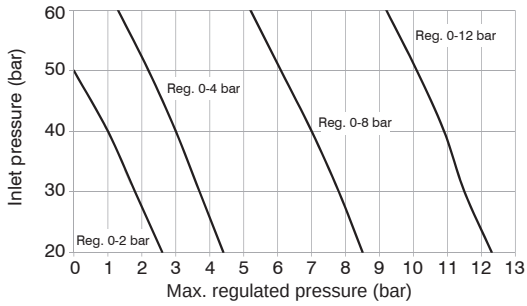

Overall dimensions and technical information are provided solely for informative purposes and may be modified without notice

Fixing bracket

Ordering code
SS17250

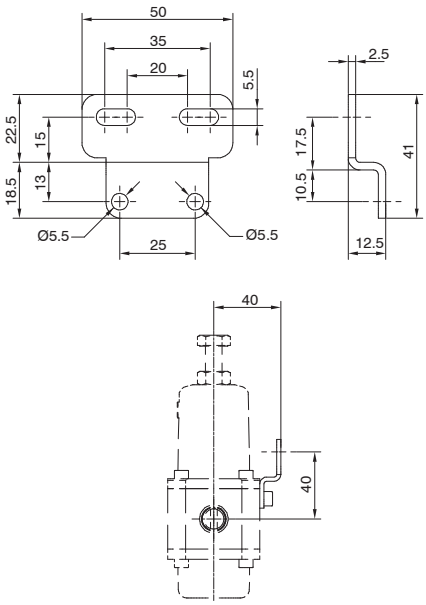

Weight 32 gr.
AISI 316L stainless steel material.
Allows wall fixing of individual products.

Pressure gauge

Ordering code	
SS17070AⓈ	
Ⓢ	SCALE
	A = 0 - 4 bar
	B = 0 - 12 bar

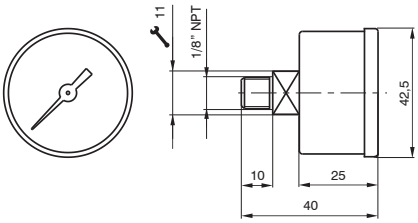

Weight 60 gr.
AISI 316 stainless steel material.
Glass transparent part with an AISI 316 stainless steel retaining ring.
Available with 0-4 bar and 0-12 bar scale.

Filters

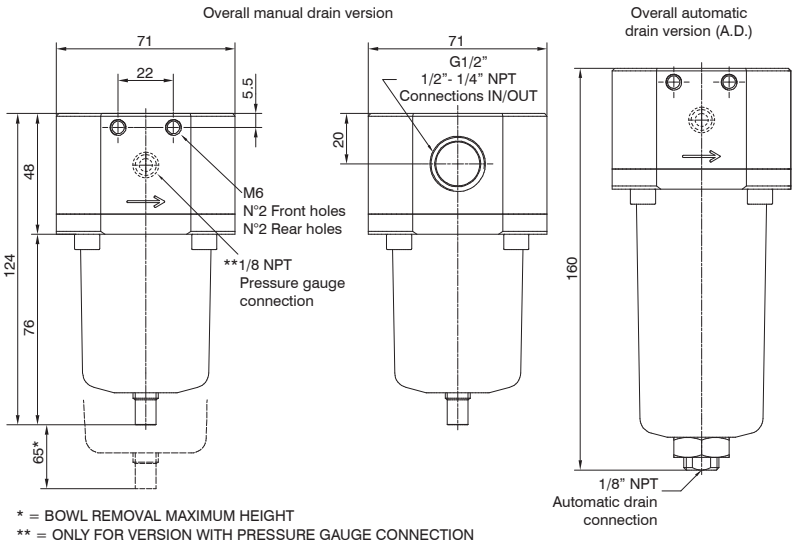

* = BOWL REMOVAL MAXIMUM HEIGHT
** = ONLY FOR VERSION WITH PRESSURE GAUGE CONNECTION

Ordering code	
S V 173 C F S O Z	
V	VERSION
	S = Standard surface finishing
	F = Clean profile
C	CONNECTIONS
	A = 1/4" NPT
	B = 1/2" NPT
	D = G1/2"
S	FILTER PORE SIZE
	A = 5 μm - 316 stainless steel
	B = 20 μm - 316 stainless steel
	C = 50 μm - 316 stainless steel
	D = 5 μm - HDPE
	E = 20 μm - HDPE
	F = 50 μm - HDPE
O	OPTIONS
	= Standard*
	L= Low temperature
	Z = Low temperature (-60 °C)
	H= Low temperature
	S= Automatic drain
	SR= Reduced orifice automatic drain
	EF= EPDM-FDA
Z	ENCLOSURE OPTIONS
	= Standard*
	G = pressure gauge connection

* no additional letter required

Construction characteristics

- Body, bowl and internal components in AISI 316L stainless steel.
- A4 (AISI 316) Stainless steel fixing screws.
- Manual or automatic condensed drain.

Technical characteristics

Maximum inlet pressure (standard version)	20 bar
Maximum inlet pressure (automatic drain version)	16 bar
Maximum inlet pressure (reduced orifice automatic drain version)	10 bar
Temperature (standard version)	-30°C +80°C
Temperature (low temperature version)	-50°C +80°C
Temperature (low temperature version -60°C)	-60°C +80°C
Temperature (high temperature version)	-5°C +150°C
Temperature (automatic and reduced orifice drain version)	-5°C +70°C
Temperature (EPDM-FDA version)	-40°C +100°C
Weight	1650 (gr.)
Bowl capacity	25 cm^3
Assembly position	Vertical

Flow rate chart

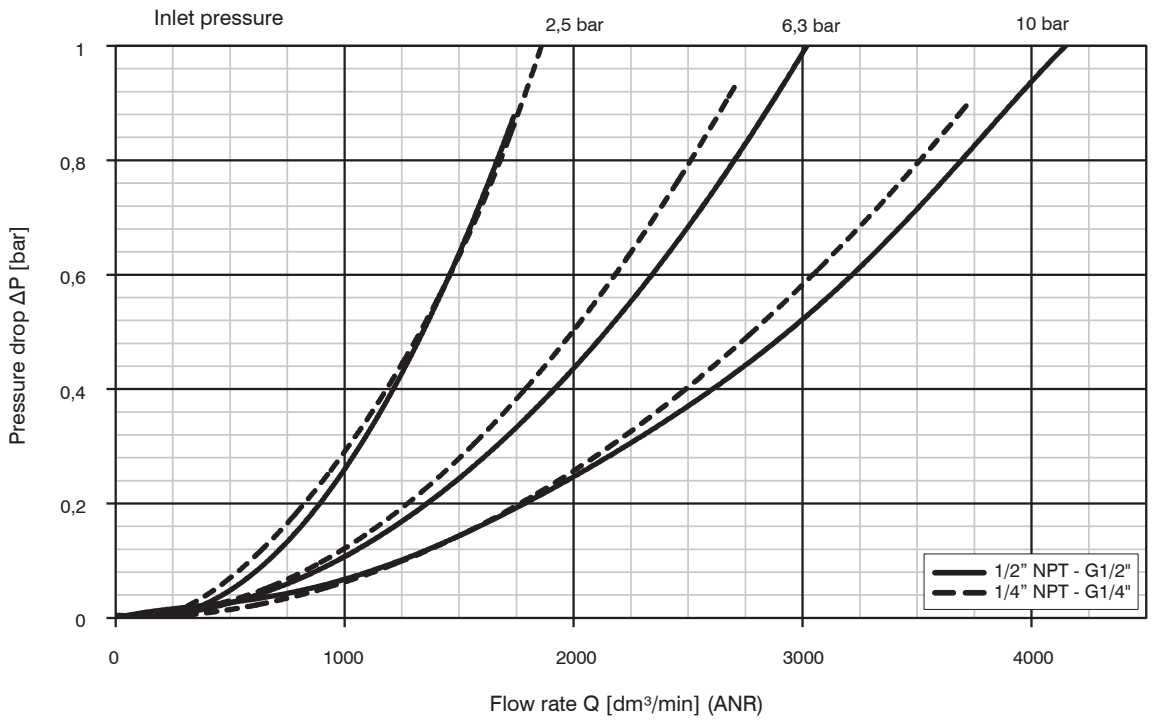

Overall dimensions and technical information are provided solely for informative purposes and may be modified without notice

Regulators

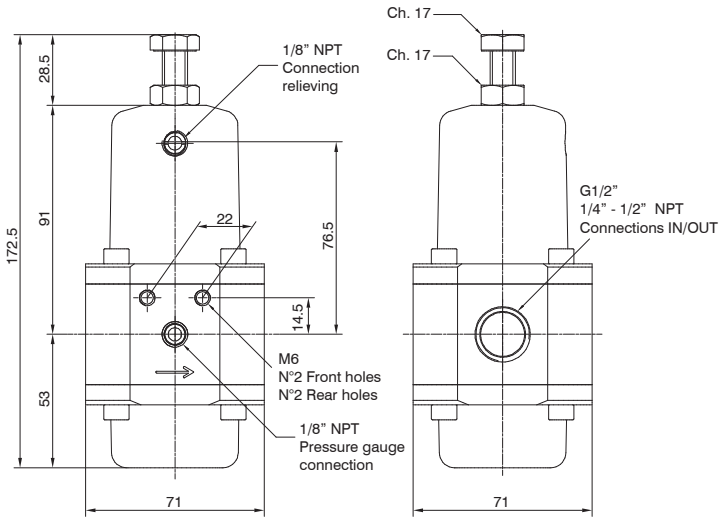

Ordering code	
S V 173 C R G T O	
V	VERSION
	S = Standard surface finishing
	F = Clean profile
C	CONNECTIONS
	A = 1/4" NPT
	B = 1/2" NPT
	D = G1/2"
G	PRESSURE RANGE
	A = 0-2 bar
	B = 0-4 bar
	C = 0-8 bar
	D = 0-12 bar
T	TYPE
	= Standard*
	N = Without relieving
O	OPTIONS
	= Standard*
	L= Low temperature
	Z = Low temperature (-60 °C)
	H= High temperature
	EF= EPDM-FDA
* no additional letter required	

Construction characteristics

- Body, adjust. mechanism, AISI 316L stainless steel and caseback inter. components
- AISI 316 stainless steel adjustment springs.
- Fixing screws, adjustment screws and locknut in A4 (AISI 316) stainless steel.
- Pressure regulator diaphragm with over-pressure drain (Relieving).
- Low hysteresis rolling diaphragm.
- Balanced system.

Note

The pressure must be always regulating while increasing. For a more precise regulation and higher sensibility, the use of a regulator with a pressure range as close as possible to the regulated pressure is recommended.

Technical characteristics

Maximum inlet pressure (standard version)	20 bar
Temperature (standard version)	-30 °C +80 °C
Temperature (low temperature version)	-50 °C +80 °C
Temperature (low temperature version -60°C)	-60 °C +80 °C
Temperature (high temperature version)	-5 °C +150 °C
Temperature (EPDM-FDA version)	-40 °C +100 °C
Pressure gauge connections	1/8" NPT
Weight	1830 (gr.)
Assembly position	Indifferent

Flow rate chart

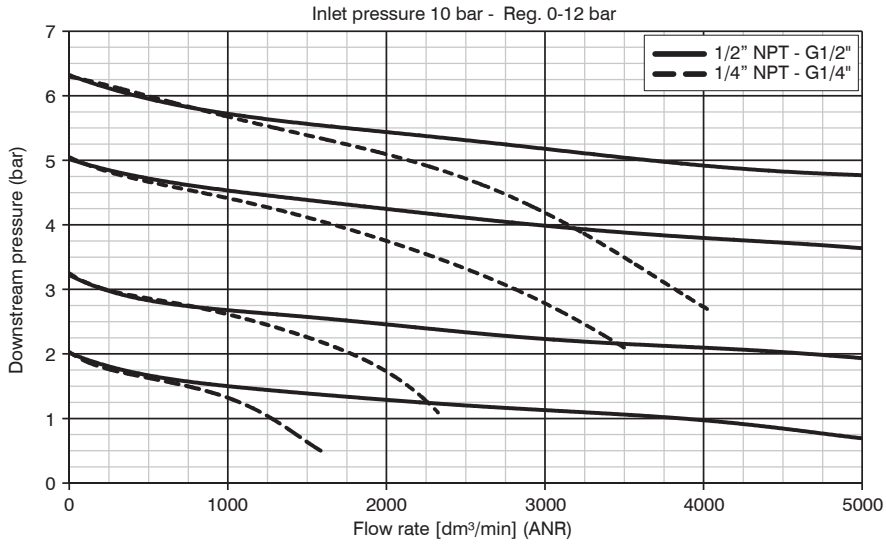

Pressure regulator Stainless steel line have been designed to withstand **a 60 Bar** maximum inlet pressure.
Maximum regulated outlet pressure is 20 Bar.
For performance details please refer to diagram alongside.

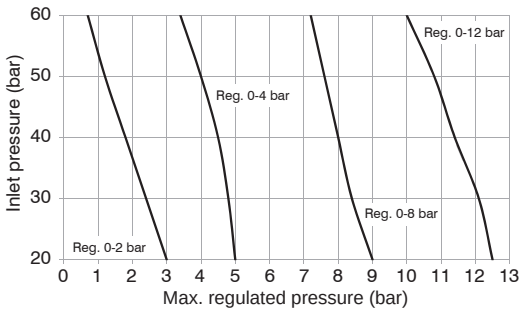

Filter regulators

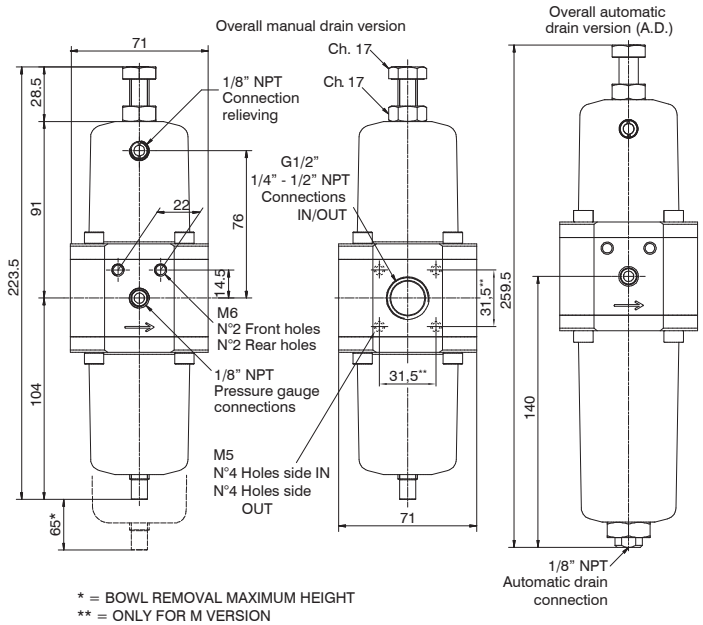

Ordering code

SⓋ173ⒸEⓈⒼⓉⓄ

Ⓥ	VERSION
	S = Standard surface finishing
	F = Clean profile
	M = Modular assembly version
Ⓒ	CONNECTIONS
	A = 1/4" NPT
	B = 1/2" NPT
	D = G1/2"
Ⓢ	FILTER PORE SIZE
	A = 5 μm - 316 stainless steel
	B = 20 μm - 316 stainless steel
	C = 50 μm - 316 stainless steel
	D = 5 μm - HDPE
	E = 20 μm - HDPE
	F = 50 μm - HDPE
Ⓖ	PRESSURE RANGE
	A = 0-2 bar
	B = 0-4 bar
	C = 0-8 bar
	D = 0-12 bar
Ⓣ	TYPE
	= Standard*
	N = Without relieving
Ⓞ	OPTIONS
	= Standard*
	L = Low temperature
	Z = Low temperature (-60 °C)
	H = High temperature
	S = Automatic drain
	SR = Reduced orifice automatic drain
	EF = EPDM-FDA

* no additional letter required

Construction characteristics

- Body, adjust. mechanism, AISI 316L stainless steel and caseback intern. components
- AISI 316 stainless steel adjustment springs.
- Fixing screws, adjustment screws and locknut in A4 (AISI 316) stainless steel.
- Filter-pressure regulator diaphragm with over-pressure drain (Relieving).
- Low hysteresis rolling diaphragm.
- Balanced system.
- Manual or automatic condensed drain.

Note

The pressure must be always regulating while increasing. For a more precise regulation and higher sensibility, the use of a regulator with a pressure range as close as possible to the regulated pressure is recommended.

Technical characteristics

Maximum inlet pressure (standard version)	20 bar
Maximum inlet pressure (automatic drain version)	16 bar
Maximum inlet pressure (reduced orifice automatic drain version)	10 bar
Temperature (standard version)	-30°C +80°C
Temperature (low temperature version)	-50°C +80°C
Temperature (low temperature version -60°C)	-60°C +80°C
Temperature (high temperature version)	-5°C +150°C
Temperature (automatic and reduced orifice drain version)	-5°C +70°C
Temperature (EPDM-FDA version)	-40°C +100°C
Pressure gauge connections	1/8" NPT
Weight	2110 (gr.)
Bowl capacity	25 cm³
Assembly position	Vertical

Flow rate chart

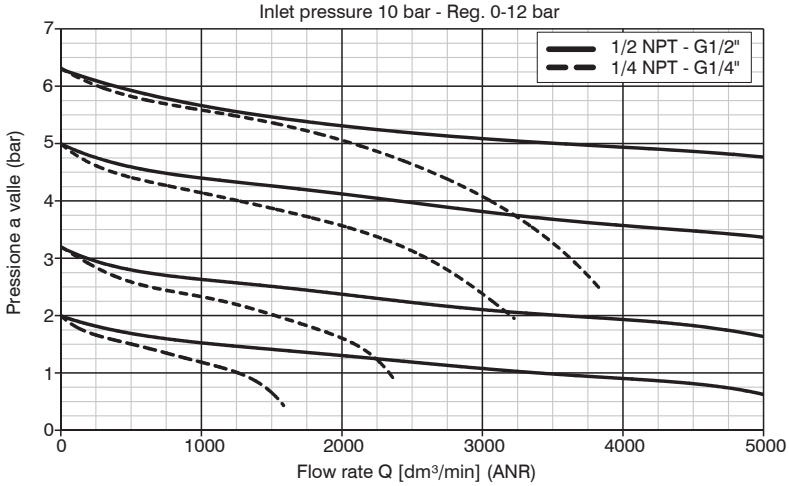

Pressure regulator Stainless steel line have been designed to withstand **a 60 Bar** maximum inlet pressure.
Maximum regulated outlet pressure is 20 Bar.
For performance details please refer to diagram alongside.

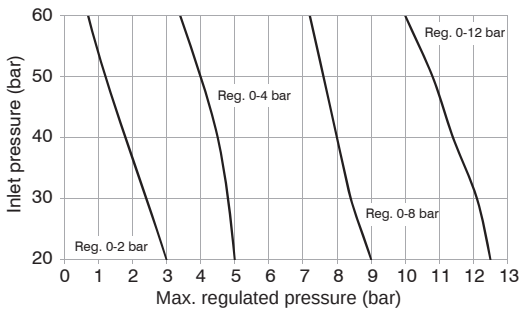

Overall dimensions and technical information are provided solely for informative purposes and may be modified without notice

Fixing bracket

Ordering code
SS17350

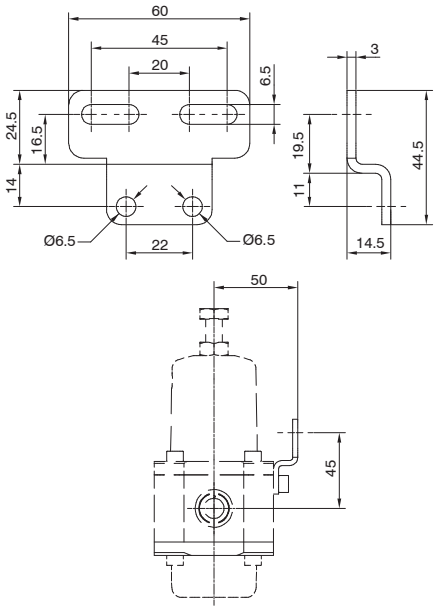

Weight 32 gr.
AISI 316L stainless steel material.
Allows wall fixing of individual products.

Pressure gauge

Ordering code	
SS17070AⓈ	
Ⓢ	SCALE
	A = 0 - 4 bar
	B = 0 - 12 bar

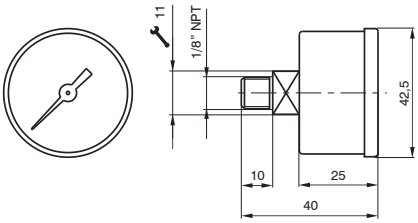

Weight 60 gr.
AISI 316 stainless steel material.
Glass transparent part with an AISI 316 stainless steel retaining ring.
Available with 0-4 bar and 0-12 bar scale.

Filters

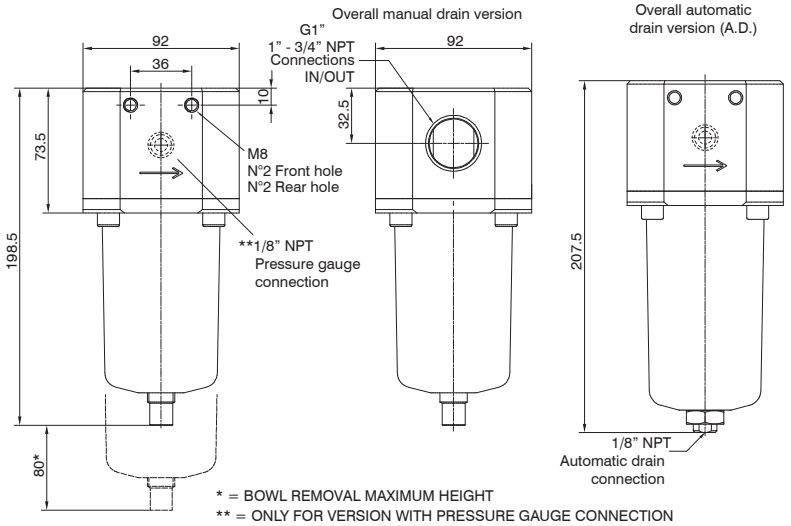

Ordering code	
S V 174 C F S O Z	
V	VERSION
	S = Standard surface finishing
	F = Clean profile
C	CONNECTIONS
	A = 3/4" NPT
	B = 1" NPT
	D = G1"
S	FILTER PORE SIZE
	A = 5 µm - 316 stainless steel
	B = 20 µm - 316 stainless steel
	C = 50 µm - 316 stainless steel
	D = 5 µm - HDPE
	E = 20 µm - HDPE
	F = 50 µm - HDPE
O	OPTIONS
	= Standard*
	L= Low temperature
	Z = Low temperature (-60 °C)
	H= High temperature
	S= Automatic drain
	SR= Reduced orifice automatic drain
	EF= EPDM-FDA
Z	ENCLOSURE OPTIONS
	= Standard*
	G = pressure gauge connection
* no additional letter required	

Construction characteristics

- Body, bowl and internal components in AISI 316L stainless steel.
- A4 (AISI 316) stainless steel fixing screws.
- Manual or automatic condensed drain.

Technical characteristics

Maximum inlet pressure (standard version)	20 bar
Maximum inlet pressure (automatic drain version)	16 bar
Maximum inlet pressure (reduced orifice automatic drain version)	10 bar
Temperature (standard version)	-30°C +80°C
Temperature (low temperature version)	-50°C +80°C
Temperature (low temperature version -60°C)	-60°C +80°C
Temperature (high temperature version)	-5°C +150°C
Temperature (automatic and reduced orifice drain version)	-5°C +70°C
Temperature (EPDM-FDA version)	-40°C +100°C
Weight 3/4 NPT - G 3/4"	4700 (gr.)
Weight 1 NPT - G 1"	4600 (gr.)
Bowl capacity	78 cm^3
Assembly position	Vertical

Flow rate chart

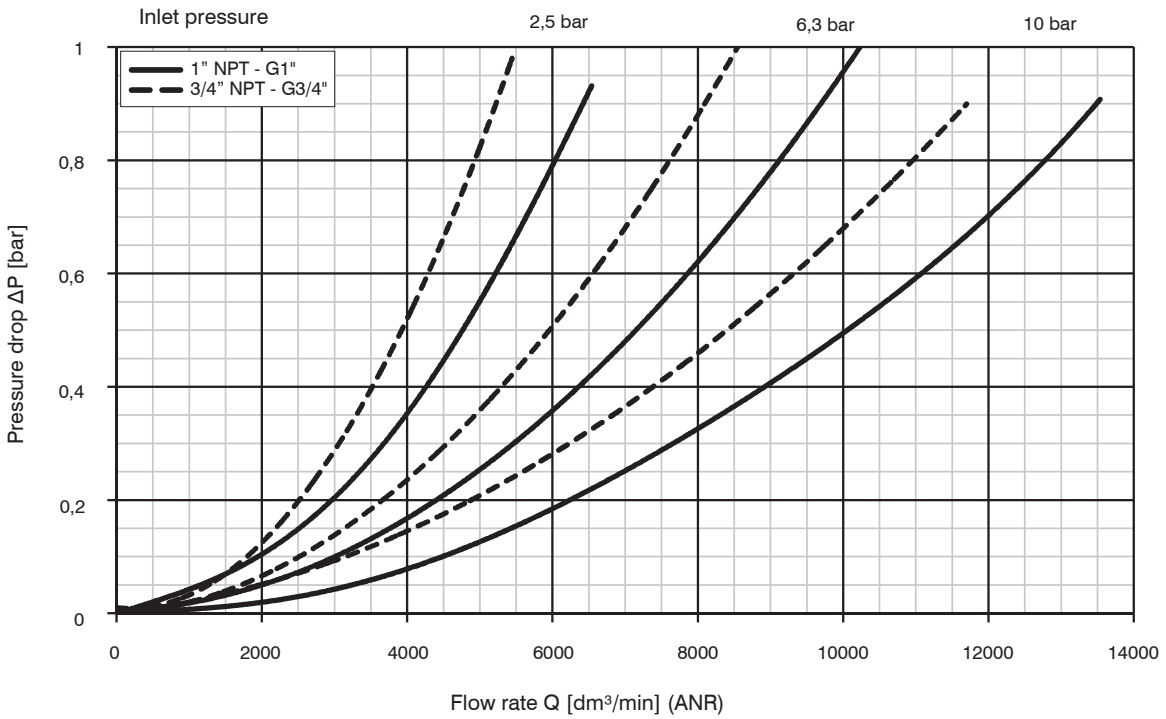

Overall dimensions and technical information are provided solely for informative purposes and may be modified without notice

Regulators

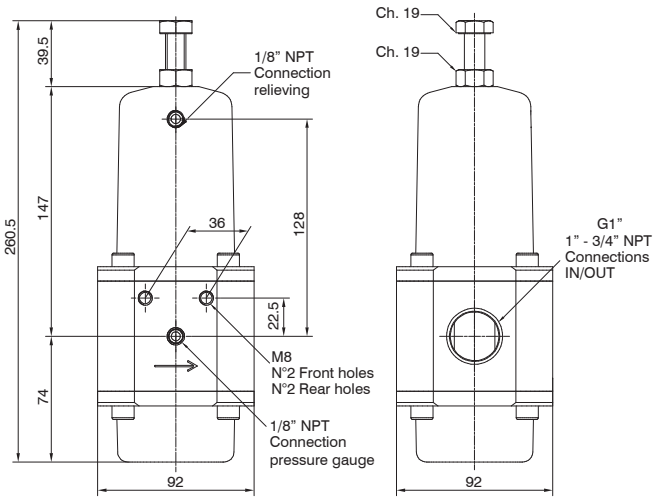

Ordering code	
S V 174 C R G T O	
V	VERSION
	S = Standard surface finishing
	F = Clean profile
C	CONNECTIONS
	A = 3/4" NPT
	B = 1" NPT
	D = G1"
G	PRESSURE RANGE
	A = 0-2 bar
	B = 0-4 bar
	C = 0-7 bar
	D = 0-10 bar
T	TYPE
	= Standard*
	N = Without relieving
O	OPTIONS
	= Standard*
	L= Low temperature
	Z = Low temperature (-60 °C)
	H= High temperature
	EF= EPDM-FDA
* no additional letter required	

Construction characteristics

- Body, adjust. mechanism, AISI 316L stainless steel and caseback inter. components
- AISI 316 Adjustment springs.
- Fixing screws, adjustment screws and locknut in A4 (AISI 316) stainless steel.
- Pressure regulator diaphragm with over-pressure drain (Relieving).
- Low hysteresis rolling diaphragm.
- Balanced system.

Note

The pressure must be always regulating while increasing. For a more precise regulation and higher sensibility, the use of a regulator with a pressure range as close as possible to the regulated pressure is recommended.

Technical characteristics

Maximum inlet pressure (standard version)	20 bar
Temperature (standard version)	-30 °C +80 °C
Temperature (low temperature version)	-50 °C +80 °C
Temperature (low temperature version -60°C)	-60 °C +80 °C
Temperature (high temperature version)	-5 °C +150 °C
Temperature (EPDM-FDA version)	-40 °C +100 °C
Pressure gauge connections	1/8" NPT
Weight 3/4" NPT - G3/4"	5500 (gr.)
Weight 1" NPT - G1"	5400 (gr.)
Assembly position	Indifferent

Flow rate chart

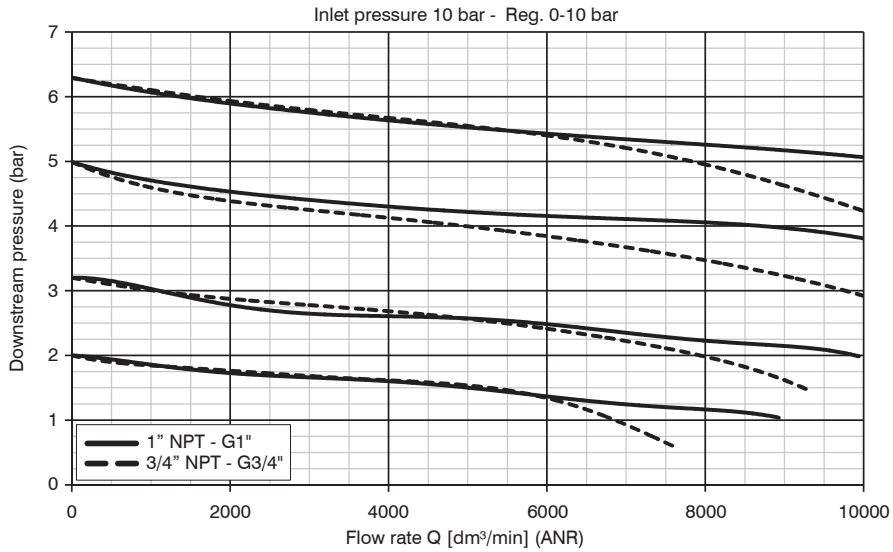

Pressure regulator Stainless steel line have been designed to withstand **a 60 Bar** maximum inlet pressure.
Maximum regulated outlet pressure is 20 Bar.
For performance details please refer to diagram alongside.

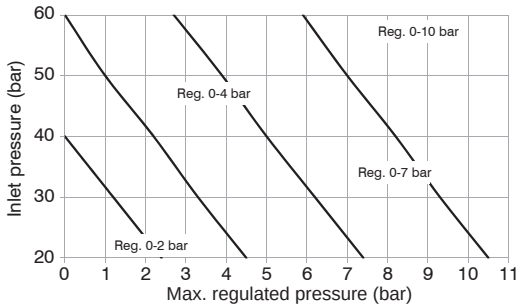

Filter regulators

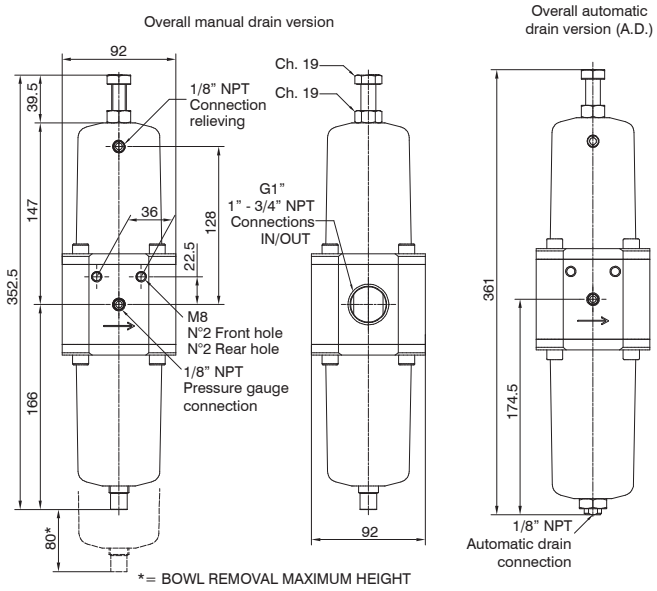

Ordering code	
S V 1 7 4 C E S G T O	
V	VERSION
	S = Standard surface finishing
	F = Clean profile
C	CONNECTIONS
	A = 3/4" NPT
	B = 1" NPT
	D = G1"
S	FILTER PORE SIZE
	A = 5 μm - 316 stainless steel
	B = 20 μm - 316 stainless steel
	C = 50 μm - 316 stainless steel
	D = 5 μm - HDPE
	E = 20 μm - HDPE
	F = 50 μm - HDPE
G	PRESSURE RANGE
	A = 0-2 bar
	B = 0-4 bar
	C = 0-7 bar
	D = 0-10 bar
T	TYPE
	= Standard*
	N = Without relieving
O	OPTIONS
	= Standard*
	L= Low temperature
	Z = Low temperature (-60 °C)
	H= High temperature
	S= Automatic drain
	SR= Reduced orifice automatic drain
	EF= EPDM-FDA
* no additional letter required	

Construction characteristics

- Body, adjust. mechanism, AISI 316L stainless steel and caseback inter. components
- AISI 316 stainless steel adjustment springs.
- Fixing screws, adjustment screws and locknut in A4 (AISI 316) stainless steel.
- Filter-pressure regulator diaphragm with over-pressure drain (Relieving).
- Low hysteresis rolling diaphragm.
- Balanced system.
- Manual or automatic condensed drain.

Note

The pressure must be always regulating while increasing. For a more precise regulation and higher sensibility, the use of a regulator with a pressure range as close as possible to the regulated pressure is recommended.

Technical characteristics

Maximum inlet pressure (standard version)	20 bar
Maximum inlet pressure (automatic drain version)	16 bar
Maximum inlet pressure (reduced orifice automatic drain version)	10 bar
Temperature (standard version)	-30°C +80°C
Temperature (low temperature version)	-50°C +80°C
Temperature (low temperature version -60°C)	-60°C +80°C
Temperature (high temperature version)	-5°C +150°C
Temperature (automatic and reduced orifice drain version)	-5°C +70°C
Temperature (EPDM-FDA version)	-40°C +100°C
Pressure gauge connections	1/8" NPT
Weight 3/4" NPT - G3/4"	6300 (gr.)
Weight 1" NPT - G1"	6200 (gr.)
Bowl capacity	78 cm^3
Assembly position	Vertical

Flow rate chart

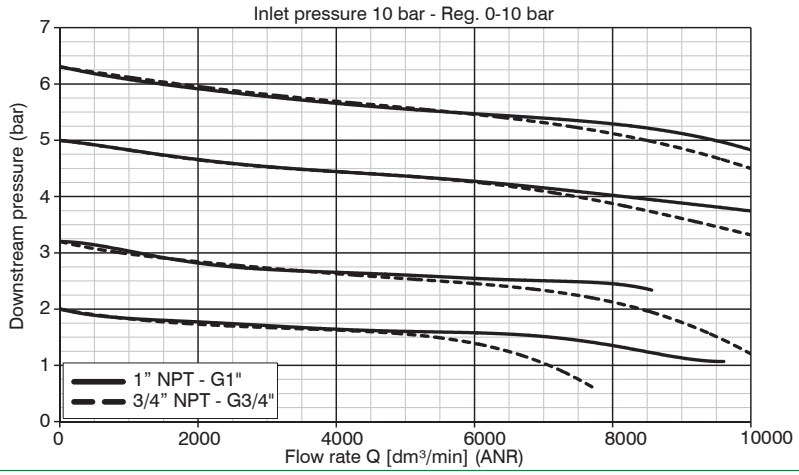

Pressure regulator Stainless steel line have been designed to withstand **a 60 Bar** maximum inlet pressure.
Maximum regulated outlet pressure is 20 Bar.
For performance details please refer to diagram alongside.

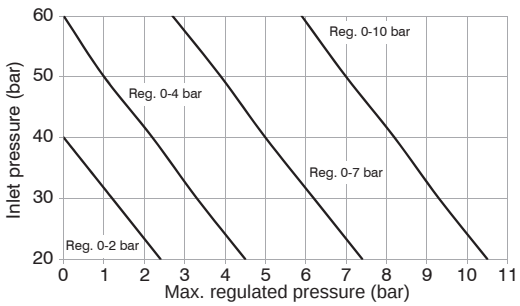

Overall dimensions and technical information are provided solely for informative purposes and may be modified without notice

Fixing bracket

Ordering code
SS17450

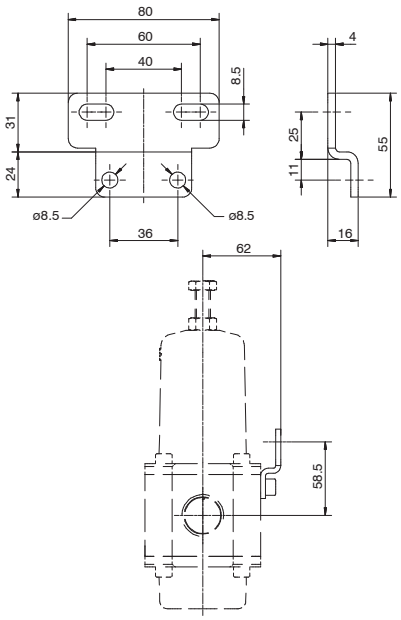

Weight 32 gr.
AISI 316L stainless steel material.
Allows wall fixing of individual products.

Pressure gauge

Ordering code	
SS17070AⓈ	
Ⓢ	SCALE
	A = 0 - 4 bar
	B = 0 - 12 bar

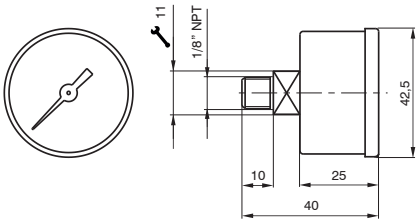

Weight 60 gr.
AISI 316 stainless steel material.
Glass transparent part with an AISI 316 stainless steel retaining ring.
Available with 0-4 bar and 0-12 bar scale.

Series 1700 - Electronic proportional regulators

General

Modern industrial applications require increasingly high performances from their pneumatic components. For example, the speed and thrust of a pneumatic actuator may need to be varied. These parameters often need to be modified dynamically while an operation is running.
This solution can be achieved by means of a regulator that can vary pressure over time.
Pneumax portfolio includes 1700 Series electronic proportional regulator, available in three different sizes with flow rates of 7, 1100, and 4000 Nl/min respectively and supporting Analog/Digital, CANopen® or IO-Link communication interfaces.

Application fields

Typical applications will include the necessity to dynamically control the force of the actuator, be it thrust of torque.
Examples include: Closing systems, painting systems, tensioning systems, packaging systems, pneumatic braking systems, force control for welding grippers, thickness compensation systems, balancing systems, laser cutting, pressure transducers for the control of modulating valves, test benches for system testing, force control for buffers on polishers, etc.

Product presentation

The supply and exhaust connections are on one side of the regulator and the working port is on the opposite side. The two remaining sides carry G 1/8” ports that are blanked off with removable plugs, these can be used to connect a pressure gauge or as an outlet port. If you order the version with the external feedback there is a M5 threaded connection to which connect the feedback pressure (to the pressure transducer). This connection is placed on the outlet connection side. This option allows to take the signal from a remote point instead of directly from the outlet connection; this function is typically used when the regulated pressure is used far away to the regulator. The control solenoid valves, the pressure sensor, and the management electronics are placed in upper part of the regulator. The electronic management system is the same for all the size 0, size 1 and size 3 regulators.

Functional diagram

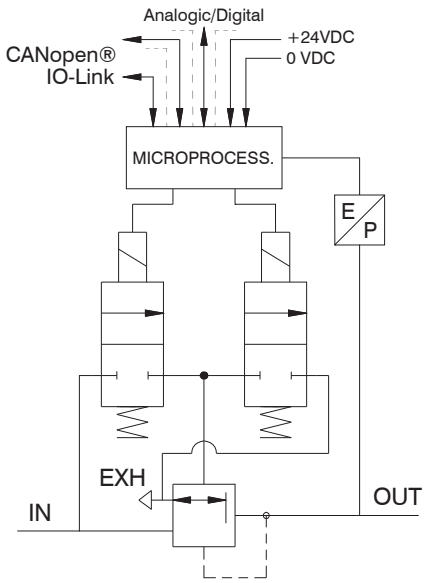

CLOSED LOOP diagram (internal control circuit)

The proportional regulator is known as a CLOSED LOOP regulator because a pressure transducer in the circuit transmits a continuous analog signal to the microprocessor, which compares the reference value and supplies the control solenoid valves accordingly.

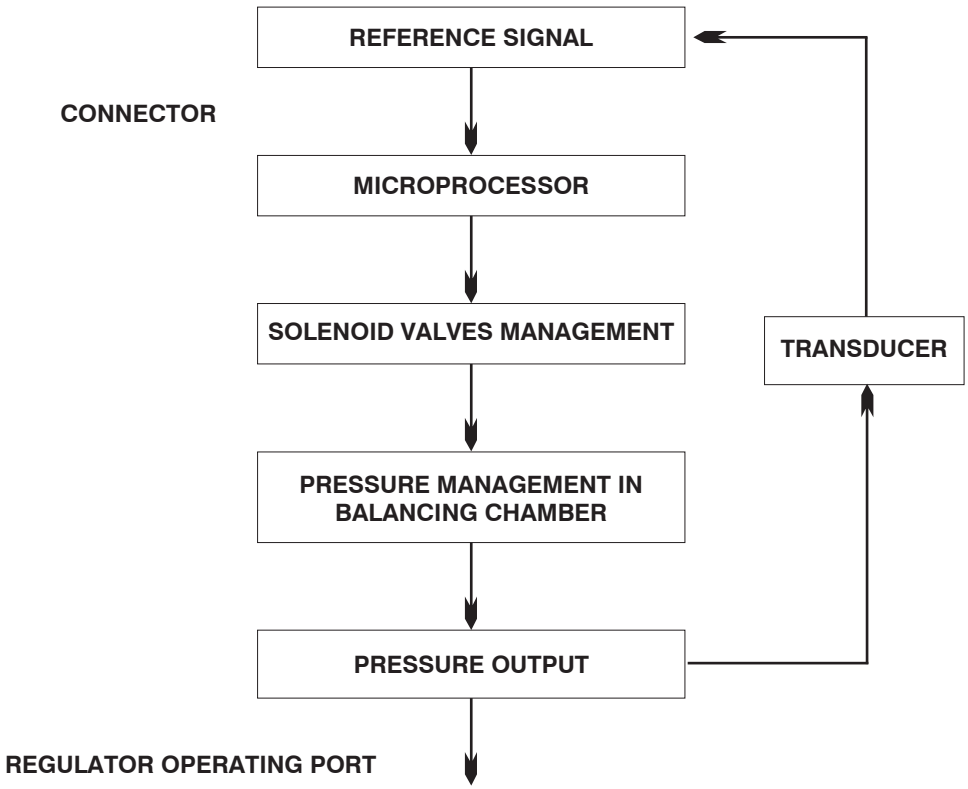

Overall dimensions and technical information are provided solely for informative purposes and may be modified without notice

Features

Pneumatic

Fluid	Air filtered at 5 micron and dehumidified		
Minimum inlet pressure	Desired outlet pressure + 1 bar		
Maximum inlet pressure	10 bar		
Outlet pressure	0 ÷ 9 bar		
Nominal flowrate from 1 to 2 (6 bar ΔP 1 bar)	**Size 0**	**Size 1**	**Size 3**
	7 Nl/min	1100 Nl/min	4000 Nl/min
Discharge flowrate (a 6 bar with 1 bar overpressure)	7 Nl/min	1300 Nl/min	4500 Nl/min
Air consumption	< 1 Nl/min	< 1 Nl/min	< 1 Nl/min
Supply connection	M5	G 1/4”	G 1/2”
Operating connection	M5	G 1/4”	G 1/2”
Exhaust connection	Ø1,8	G 1/8”	G 3/8”
Maximum fitting tightening	3 Nm	15 Nm	15 Nm

Electric

Supply voltage		24VDC ± 10% (stabilized with ripple<1%)
Standby current consumption		70mA
Current consumption with solenoid valves on		400mA
**Reference Signal	Voltage	*0 ÷ 10 V *0 ÷ 5 V *1 ÷ 5 V
	Current	*4 ÷ 20 mA *0 ÷ 20 mA
**Input Impedance	Voltage	10 kΩ
	Current	250 Ω
**Digital Inputs		24VDC ± 10%
**Digital Output		24 VDC PNP (max current 50 mA)

Functional

Linearity	± Insensitivity
Hysteresis	± Insensitivity
Repeatability	± Insensitivity
Sensitivity	0,01 bar
Assembly position	Indifferent
Protection grade	IP65 (with casing fitted)
Ambient temperature	-5° ÷ 50° / 23°F ÷ 122°F

Constructional

Body	Anodized aluminum		
Shutters	Brass with vulcanized NBR		
Diaphragm	Cloth-covered rubber		
Seals	NBR		
Cover for electrical part	Technopolymer		
Springs	AISI 302		
Weight	**Size 0**	**Size 1**	**Size 3**
	168 gr.	360 gr.	850 gr.

* Selectable by keyboard or by RS-232
** Valid only for devices with analog input

Overall dimensions ("521" standard version and CANopen® version with SUB-D 15 poles)

Size 0

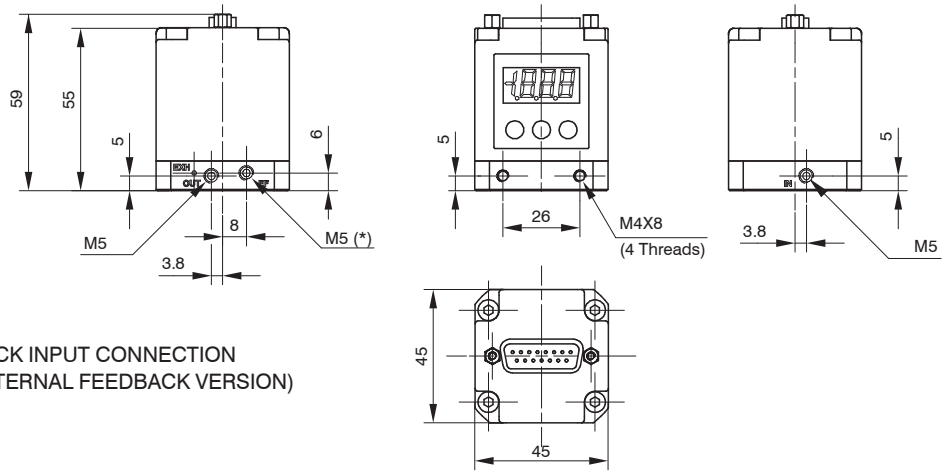

* = EXTERNAL FEEDBACK INPUT CONNECTION
(AVAILABLE ONLY ON THE EXTERNAL FEEDBACK VERSION)

Size 1

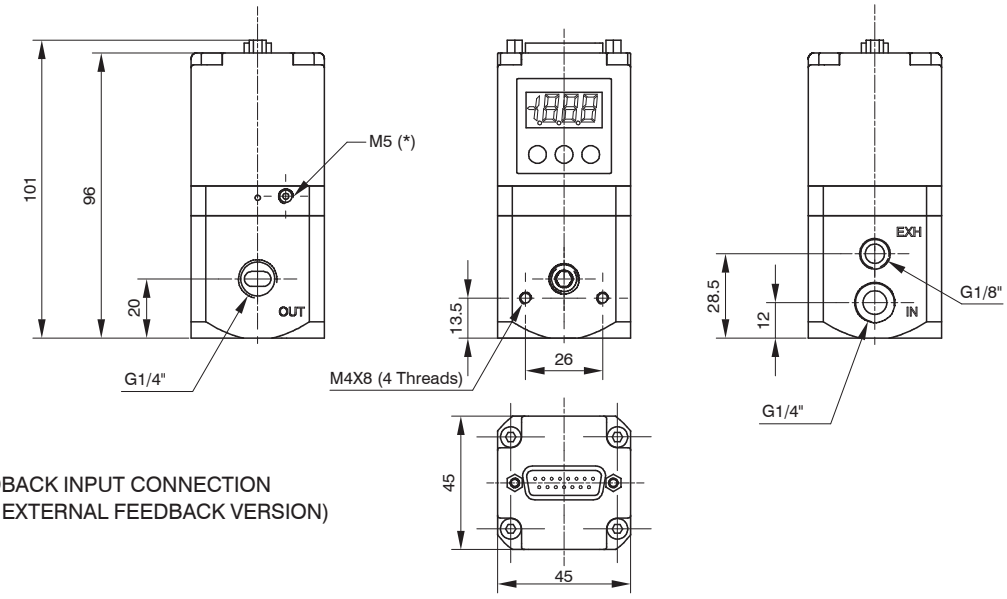

* = EXTERNAL FEEDBACK INPUT CONNECTION
(AVAILABLE ONLY ON THE EXTERNAL FEEDBACK VERSION)

Size 3

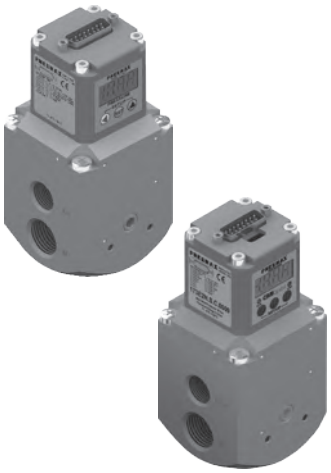

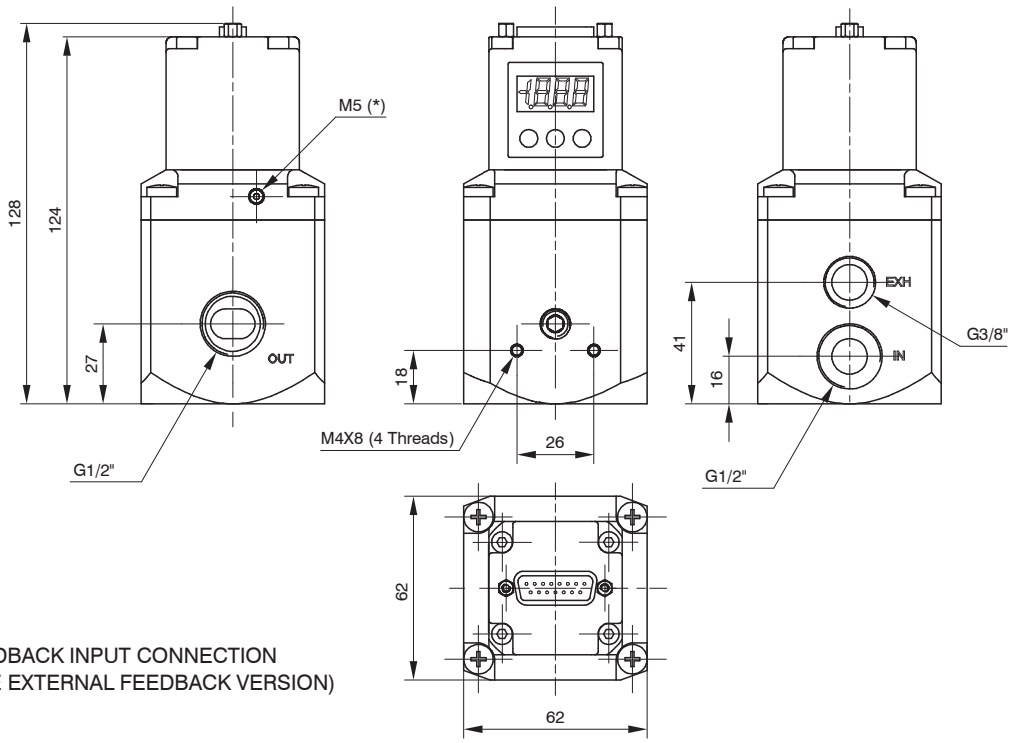

* = EXTERNAL FEEDBACK INPUT CONNECTION
(AVAILABLE ONLY ON THE EXTERNAL FEEDBACK VERSION)

Overall dimensions and technical information are provided solely for informative purposes and may be modified without notice

Mounting options ("521" standard version and CANopen® version with SUB-D 15 poles)

In addition to mounting directly using the M4 tappings on the body, the 170M5 bracket may also be used, as shown below:

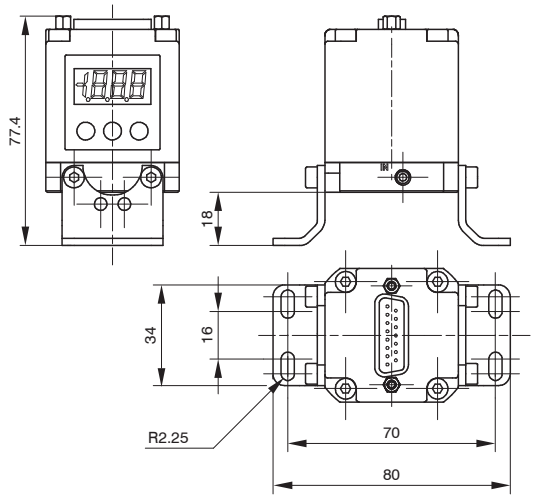

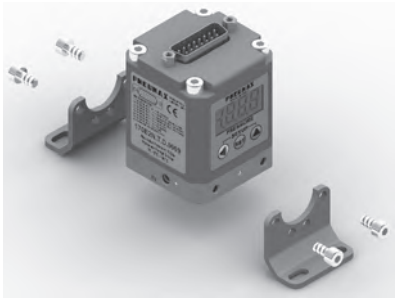

Size 0

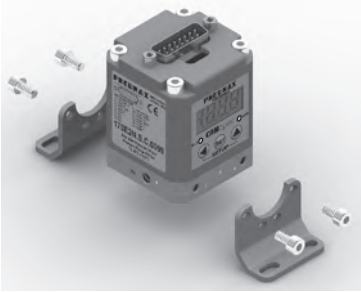

Size 1

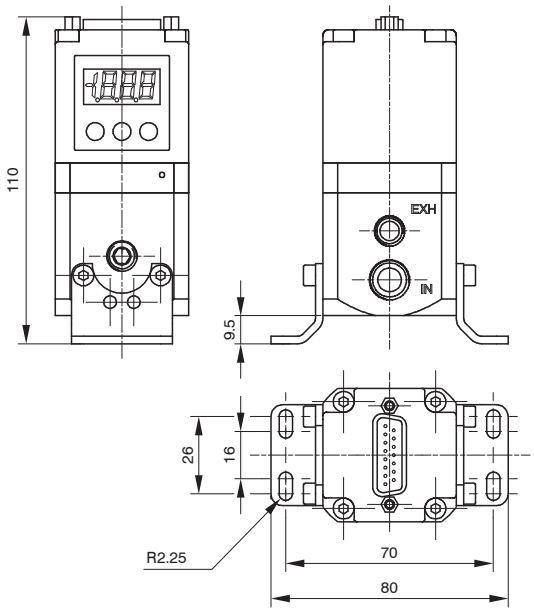

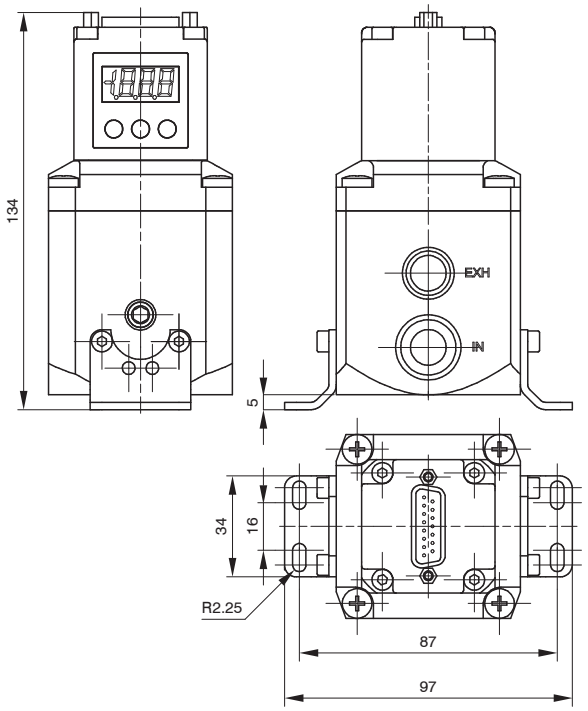

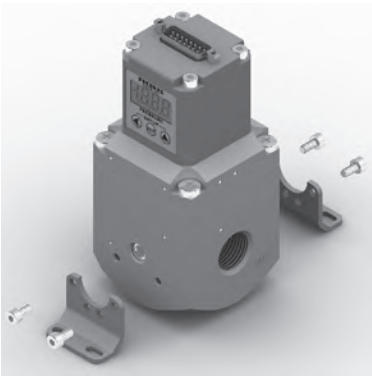

Size 3

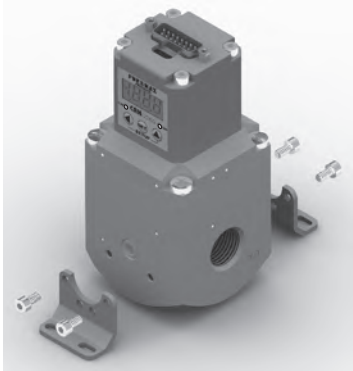

Overall dimensions ("521 M12 version" - CANopen® version)

Size 0

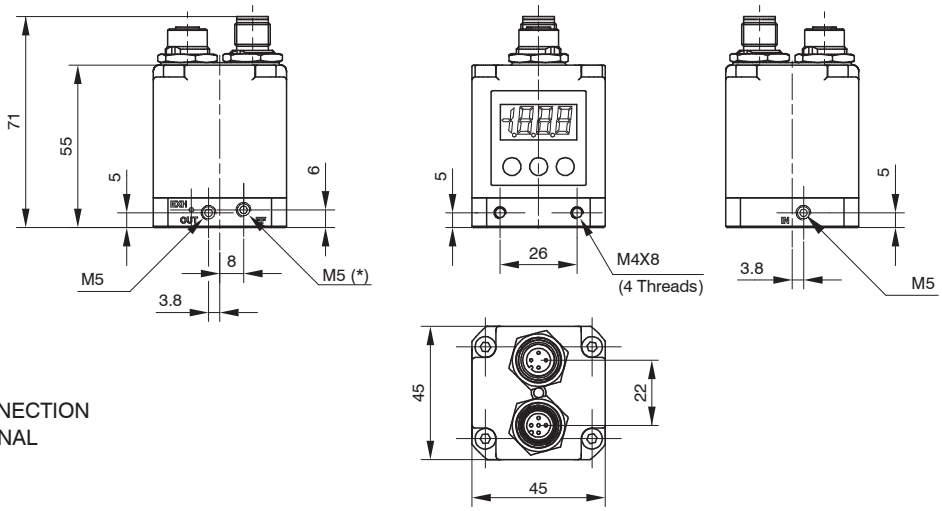

* = EXTERNAL FEEDBACK INPUT CONNECTION
(AVAILABLE ONLY ON THE EXTERNAL
FEEDBACK VERSION)

Size 1

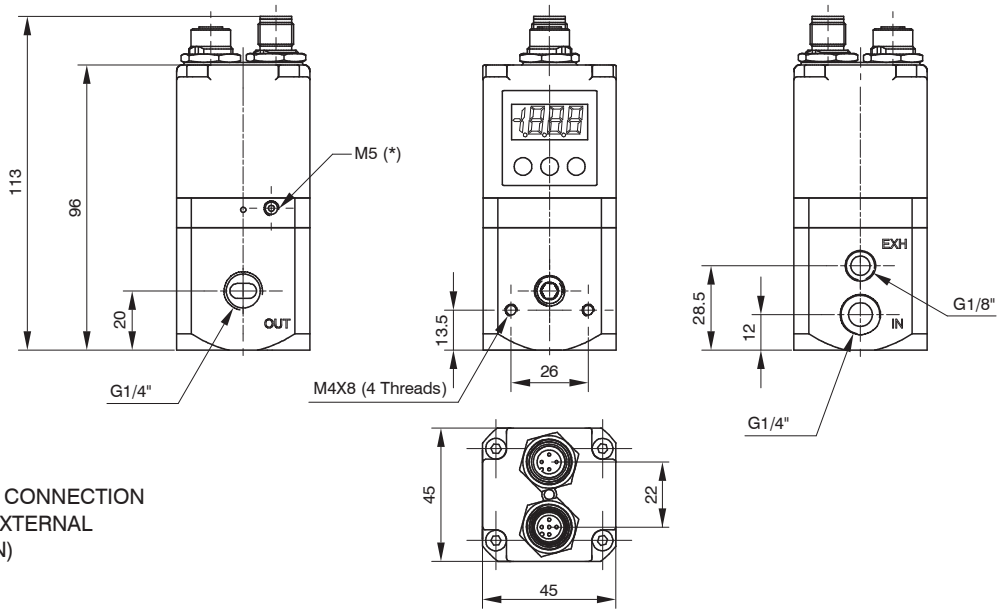

* = EXTERNAL FEEDBACK INPUT CONNECTION
(AVAILABLE ONLY ON THE EXTERNAL
FEEDBACK VERSION)

Size 3

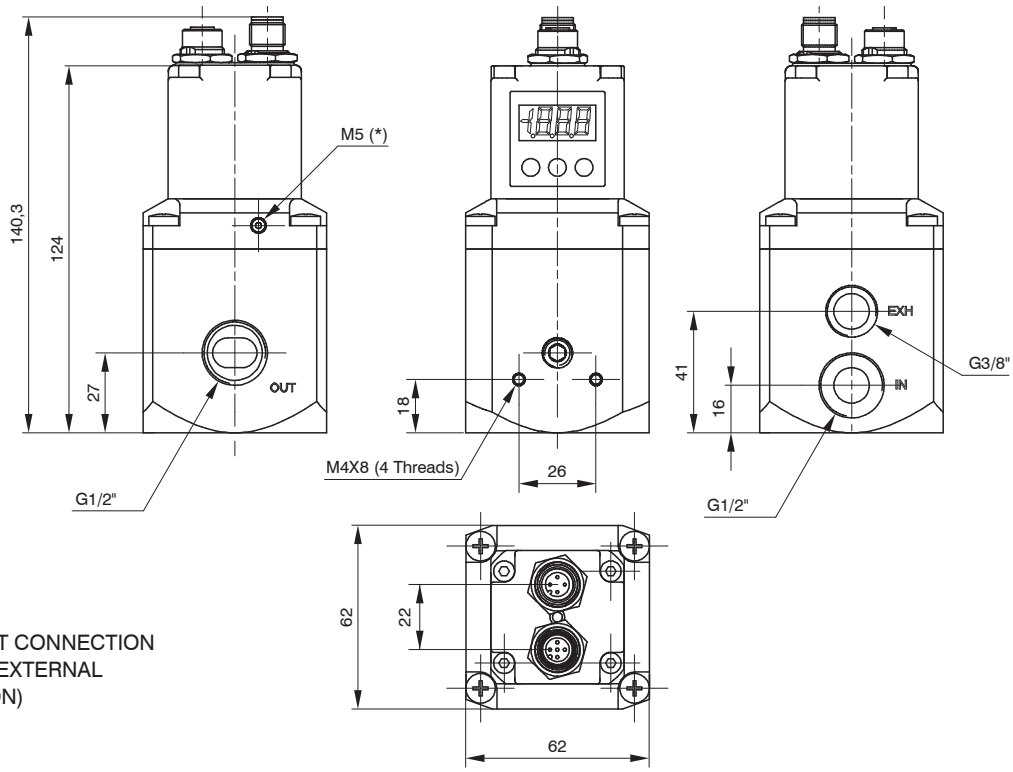

* = EXTERNAL FEEDBACK INPUT CONNECTION
(AVAILABLE ONLY ON THE EXTERNAL
FEEDBACK VERSION)

Overall dimensions and technical information are provided solely for informative purposes and may be modified without notice

Mounting options ("521 M12 version" - CANopen® version)

In addition to mounting directly using the M4 tappings on the body, the 170M5 bracket may also be used, as shown below:

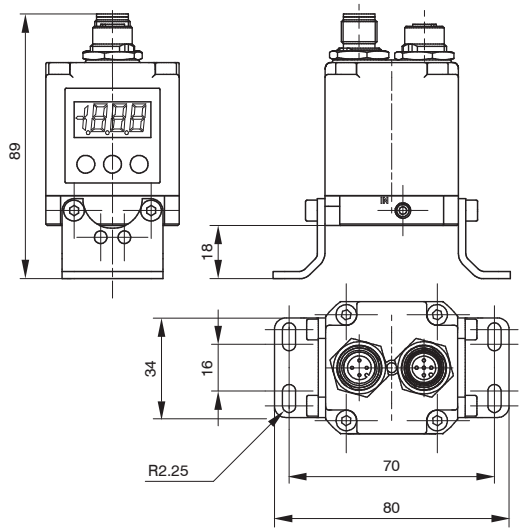

Size 0

Size 1

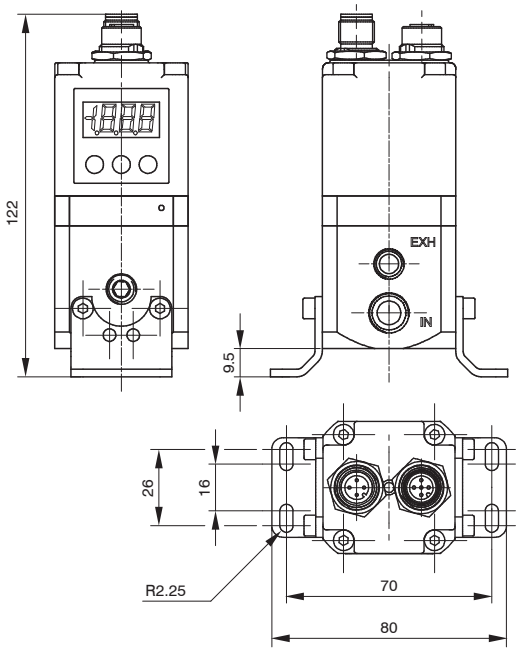

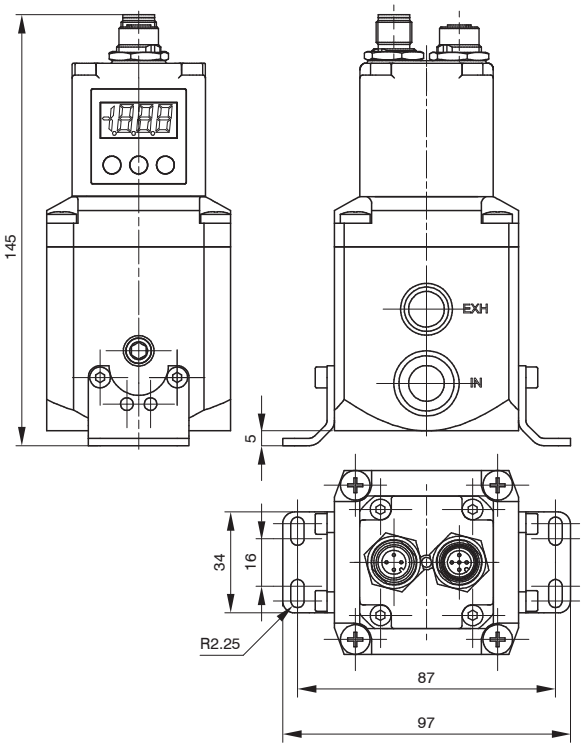

Size 3

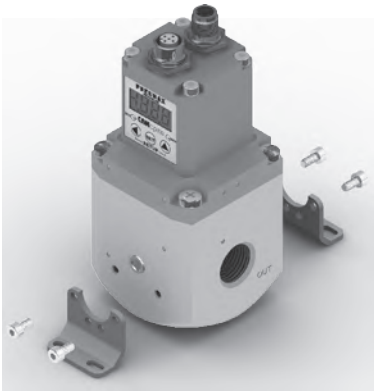

Overall dimensions ("521 M12 BASIC version")

Size 0

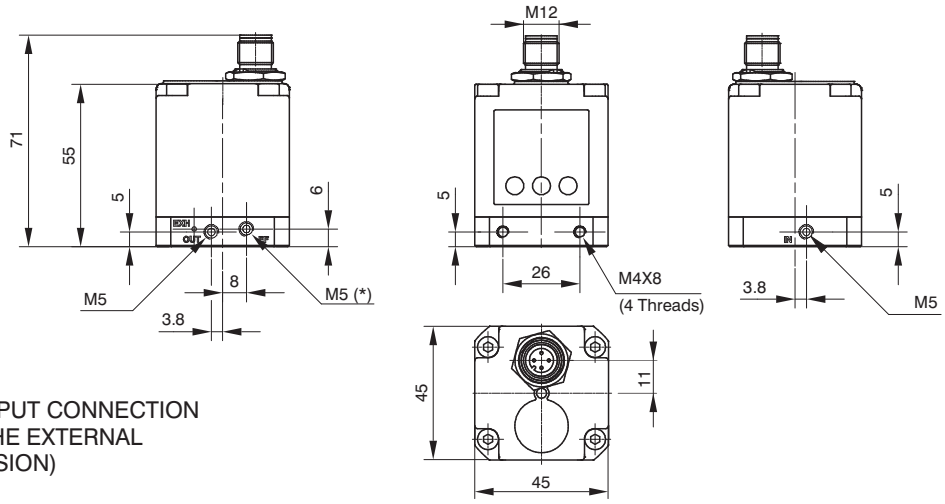

* = EXTERNAL FEEDBACK INPUT CONNECTION
(AVAILABLE ONLY ON THE EXTERNAL
FEEDBACK VERSION)

Size 1

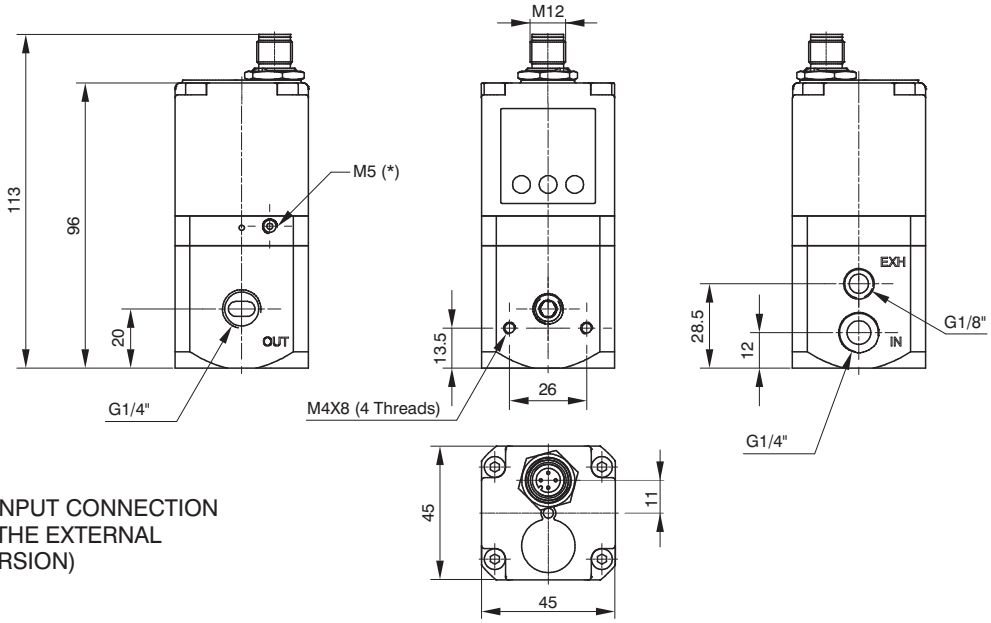

* = EXTERNAL FEEDBACK INPUT CONNECTION
(AVAILABLE ONLY ON THE EXTERNAL
FEEDBACK VERSION)

Size 3

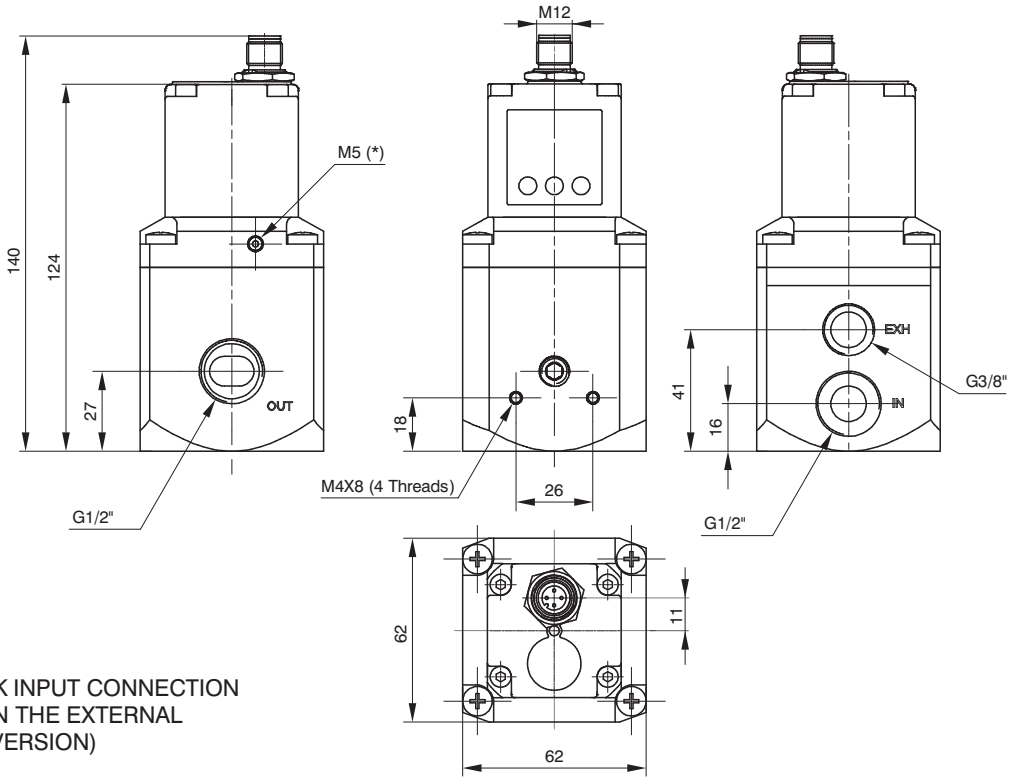

* = EXTERNAL FEEDBACK INPUT CONNECTION
(AVAILABLE ONLY ON THE EXTERNAL
FEEDBACK VERSION)

Overall dimensions and technical information are provided solely for informative purposes and may be modified without notice

Mounting options ("521 M12 BASIC version")

In addition to mounting directly using the M4 tappings on the body, the 170M5 bracket may also be used, as shown below:

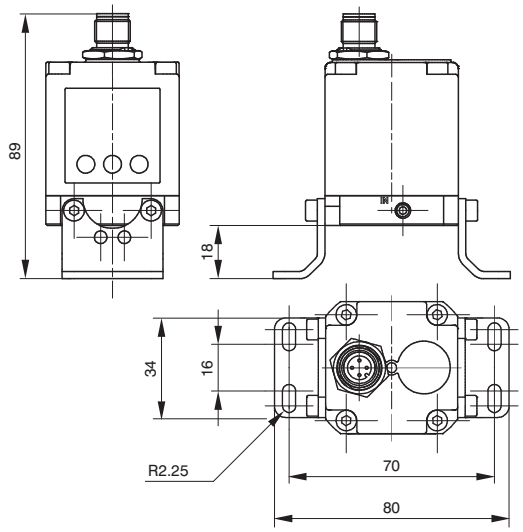

Size 0

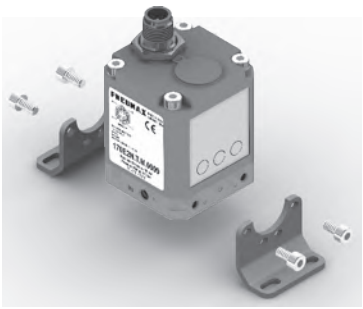

Size 1

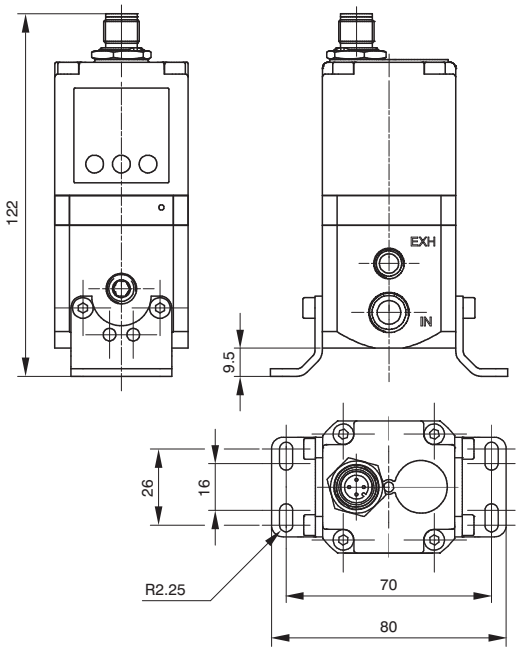

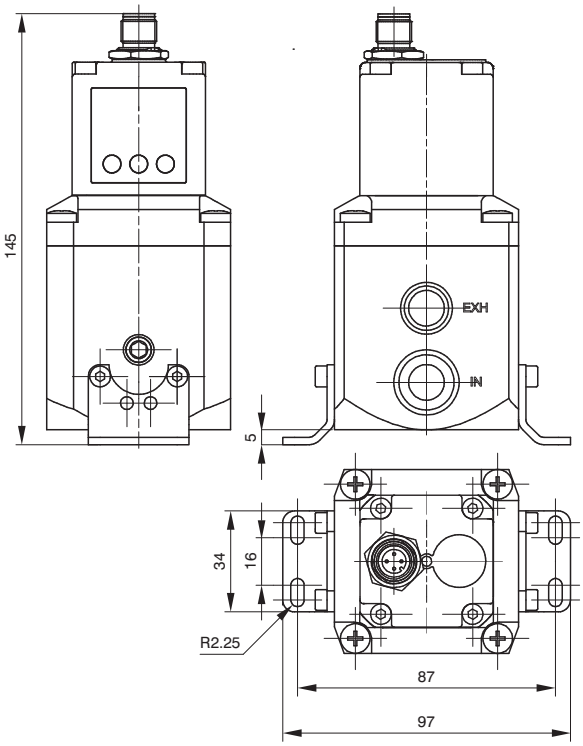

Size 3

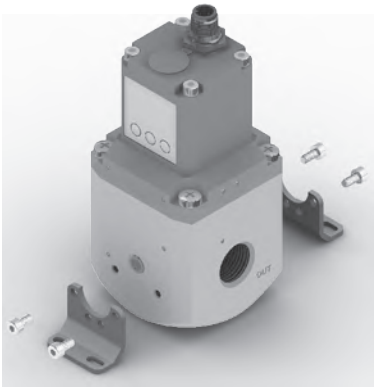

Overall dimensions ("521 M12 version" - Standard version)

Size 0

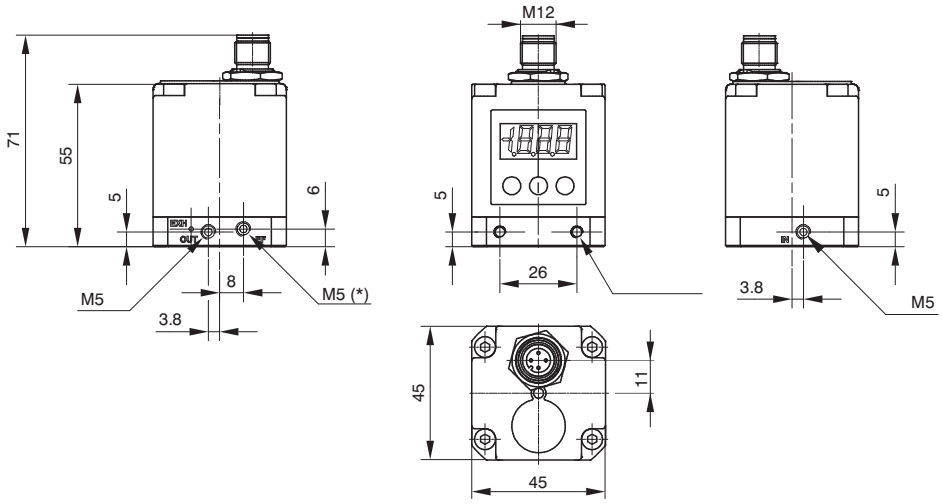

Size 1

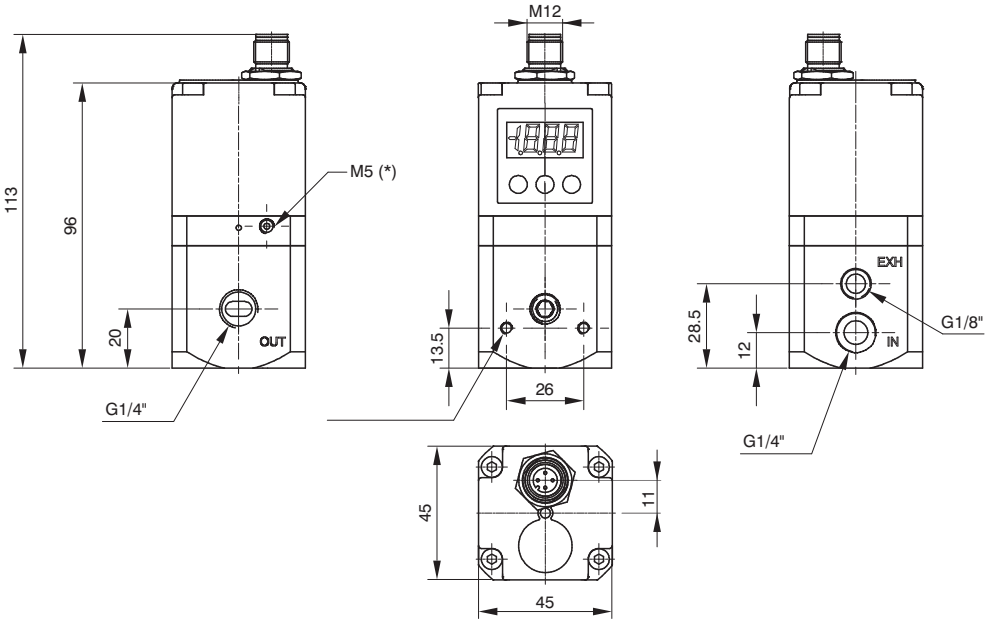

Size 3

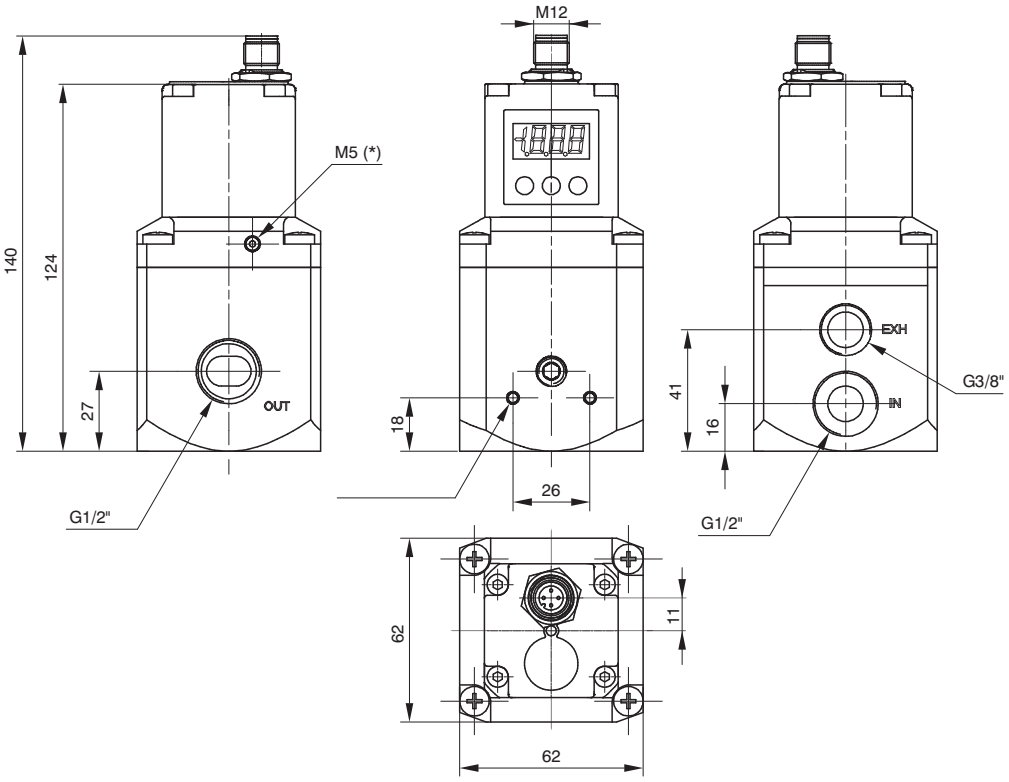

Overall dimensions and technical information are provided solely for informative purposes and may be modified without notice

Mounting options ("521 M12 version" - Standard version)

In addition to mounting directly using the M4 tappings on the body, the 170M5 bracket may also be used, as shown below:

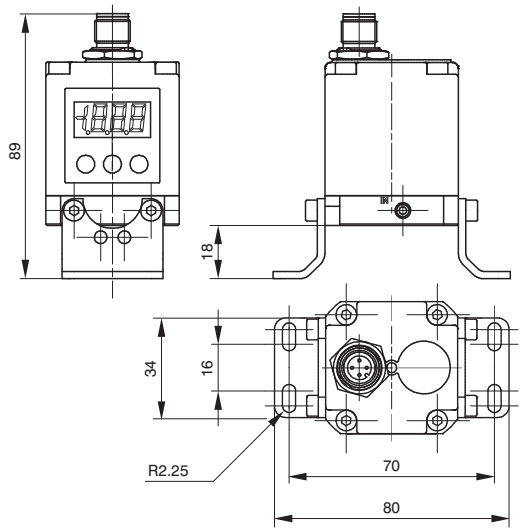

Size 0

Size 1

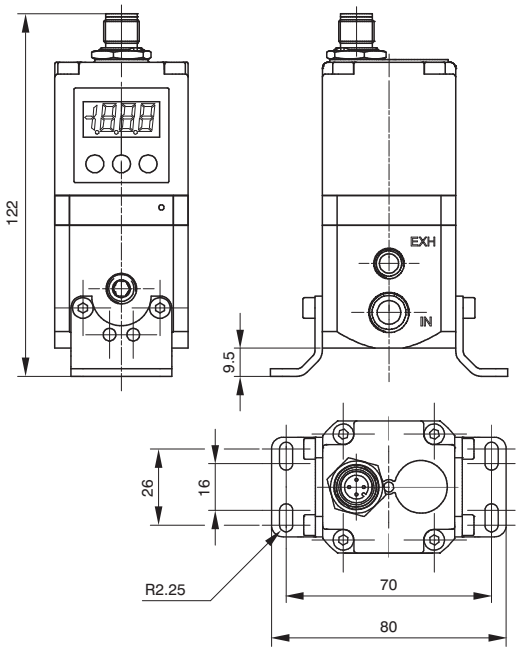

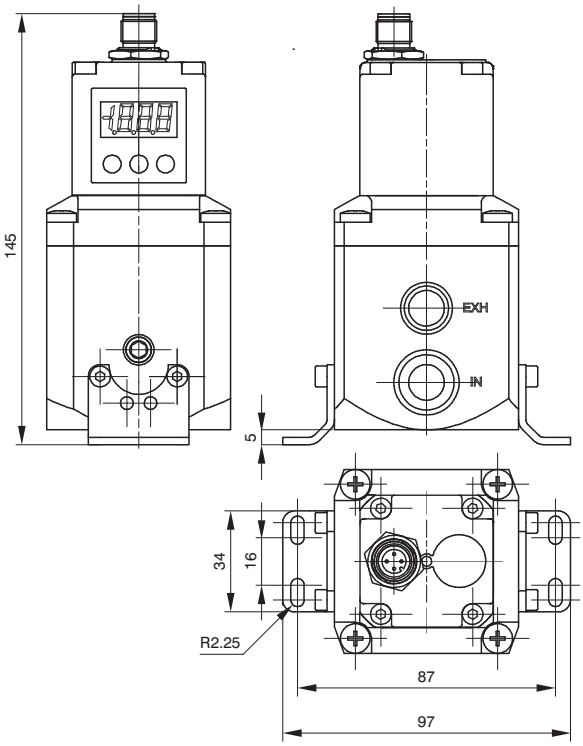

Size 3

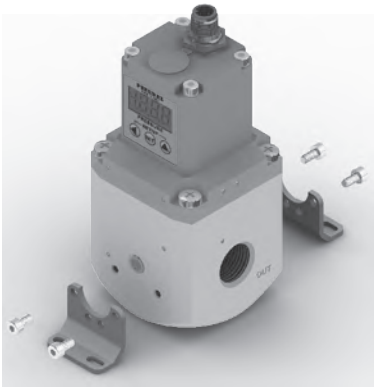

Overall dimensions ("521 IO-Link version")

Size 0

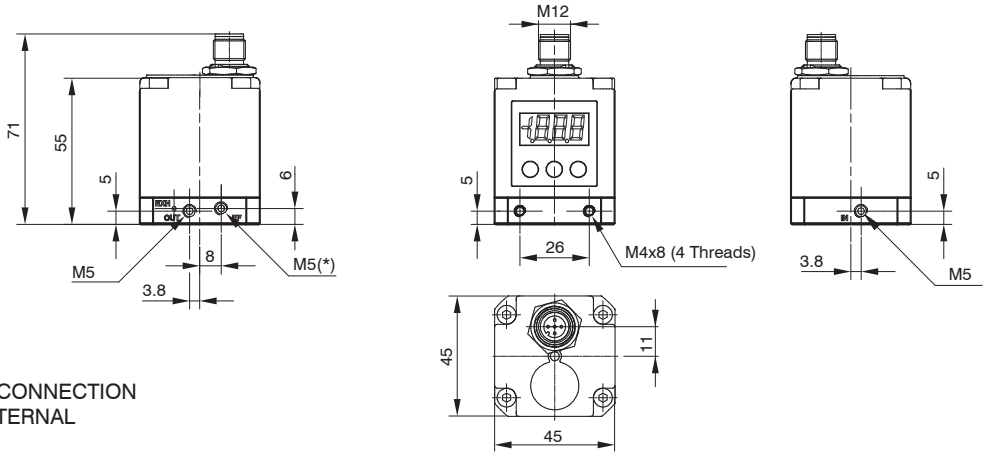

* = EXTERNAL FEEDBACK INPUT CONNECTION (AVAILABLE ONLY ON THE EXTERNAL FEEDBACK VERSION)

Size 1

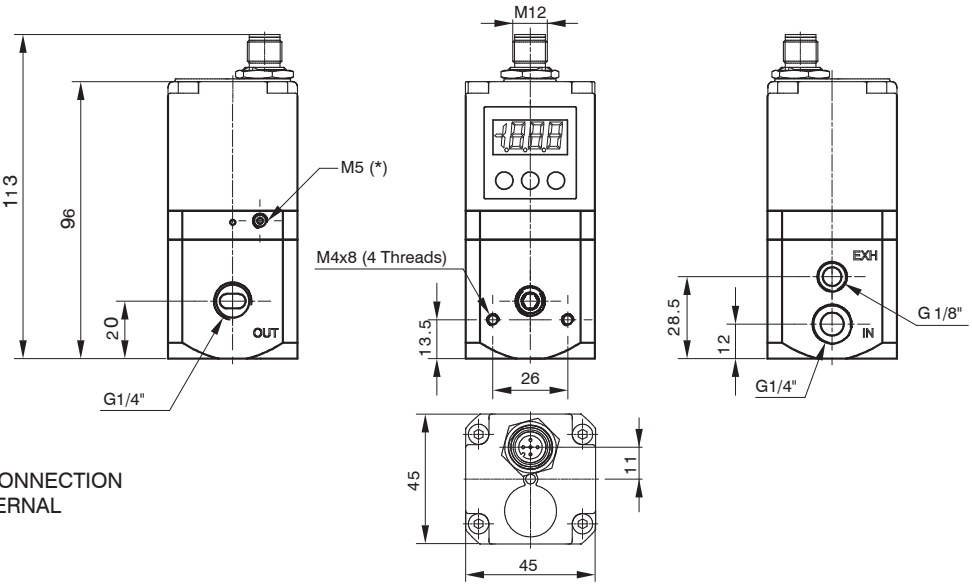

* = EXTERNAL FEEDBACK INPUT CONNECTION (AVAILABLE ONLY ON THE EXTERNAL FEEDBACK VERSION)

Size 3

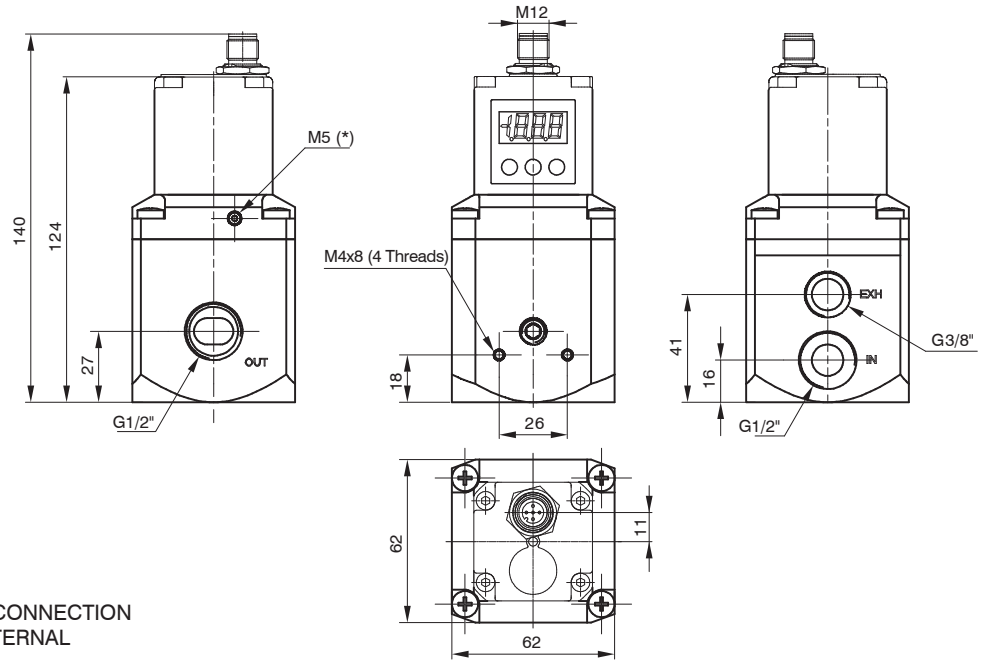

* = EXTERNAL FEEDBACK INPUT CONNECTION (AVAILABLE ONLY ON THE EXTERNAL FEEDBACK VERSION)

Overall dimensions and technical information are provided solely for informative purposes and may be modified without notice

Mounting options ("521 IO-Link version")

In addition to mounting directly using the M4 tappings on the body, the 170M5 bracket may also be used, as shown below.

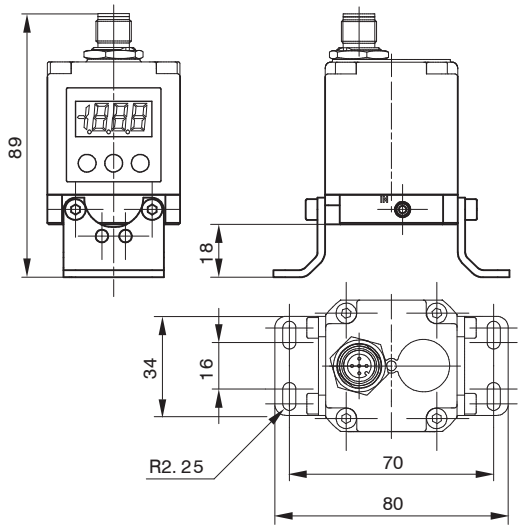

Size 0

Size 1

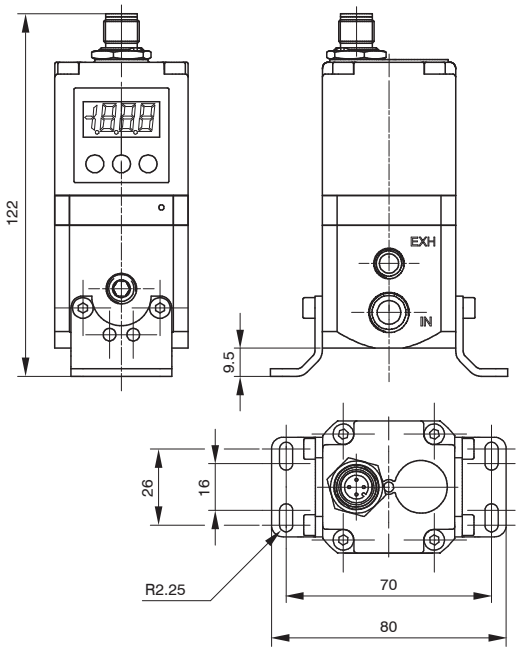

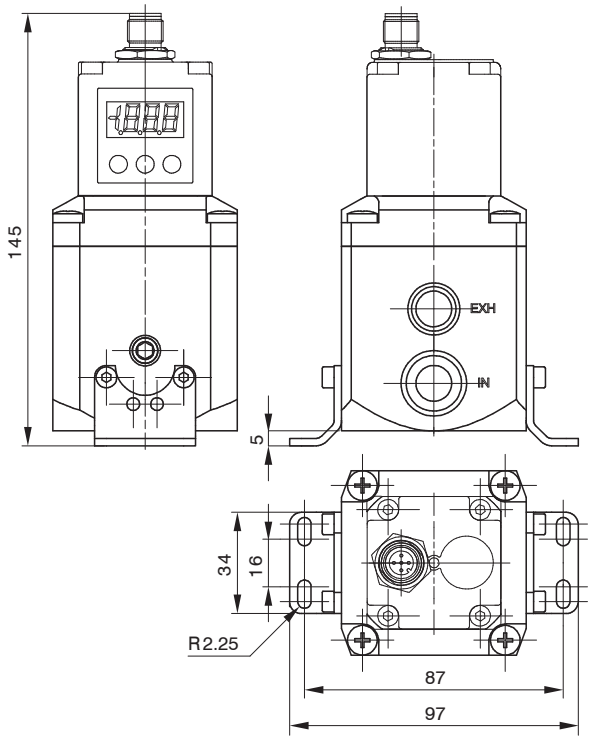

Size 3

Installation/Operation

PNEUMATIC CONNECTION

The compressed air is connected by means of M5 threaded holes (for size 0 regulators), G 1/4” threaded holes (for size 1 regulators) and G 1/2” threaded holes (for size 3 regulators) on the body.
Before making the connections, eliminate any impurities in the connecting pipes to prevent chippings or dust entering the unit. Do not supply the circuit with more than 10 bar pressure and make sure that the compressed air is dried (excessive condensate could cause the appliance to malfunction) and filtered at 5 micron. The supply pressure to the regulator must always be at least 1 bar greater than the desired outlet pressure.
If a silencer is applied to the discharge path the unit response time may change; periodically check that the silencer is not blocked and replace it if necessary.

ELECTRICAL CONNECTION

For the electrical connection a SUB-D 15-pole female or a M12 connector is used (accordingly to the model, to be ordered separately). Wire in accordance with the wiring diagram shown below.
Warning: INCORRECT CONNECTIONS MAY DAMAGE THE DEVICE

NOTES ON OPERATION

If the electric supply is interrupted, the outlet pressure is maintained at the set value. However, maintaining the exact value cannot be ensured as it is impossible to operate the solenoid valves.
In order to discharge the circuit downstream, zero the reference, make sure that the display shows a pressure value equal to zero and then disconnect the electric power supply.
A version of the device is available that exhausts the downstream circuit when the power supply is removed. (Option “A” at the end of the ordering code).
If the compressed-air supply is suspended and the electric power supply is maintained a whirring will be heard that is due to the solenoid valves; an operating parameter can be activated (P18) that triggers the regulator protection whenever the requested pressure is not reached within 4 seconds of the reference signal being sent. In this case the system will intervene to interrupt the control of the solenoid valves. Every twenty seconds, the unit will start the reset procedure until standard operating conditions have been restored.

"521" Standard version with D-SUB connector

TOP VIEW OF THE REGULATOR CONNECTOR

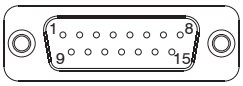

CONNECTOR PINOUT:
1 = DIGITAL INPUT 1
2 = DIGITAL INPUT 2
3 = DIGITAL INPUT 3
4 = DIGITAL INPUT 4
5 = DIGITAL INPUT 5
6 = DIGITAL INPUT 6
7 = DIGITAL INPUT 7
8 = ANALOG INPUT / DIGITAL INPUT 8
9 = SUPPLY (24 VDC)
10 = DIGITAL OUTPUT (24 VDC PNP)
11 = ANALOG OUTPUT (CURRENT)
12 = ANALOG OUTPUT (VOLTAGE)
13 = Rx RS-232
14 = Tx RS-232
15 = GND

"521" M12 BASIC and Standard versions

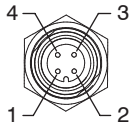

M12 4P
MALE

M12 BASIC version
CONNECTOR PINOUT:
1 = POWER SUPPLY (24 VDC)
2 = NC
3 = GND
4 = ANALOG INPUT

M12 Standard version
CONNECTOR PINOUT:
1 = POWER SUPPLY (24 VDC)
2 = ANALOG OUTPUT (depending on the model)
3 = GND
4 = ANALOG INPUT

"521" CANopen® version with D-SUB connector

TOP VIEW OF THE REGULATOR CONNECTOR

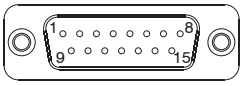

"521" CANopen® version with M12 connector

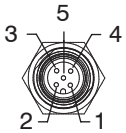

M12 5P
FEMALE

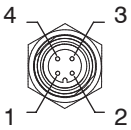

M12 4P
MALE

CONNECTOR PINOUT:
1 = CAN_SHIELD
2 = CAN_V+
3 = CAN_GND
4 = CAN_H
5 = CAN_L
6 = NC
7 = NC
8 = NC
9 = SUPPLY (+24 VDC)
10 = CAN_SHIELD
11 = CAN_V+
12 = CAN_GND
13 = CAN_H
14 = CAN_L
15 = GND

"521 IO-Link version"

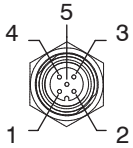

M12 5P
MALE

CONNECTOR PINOUT:
1 = L+
2 = +24 VDC (P24)
3 = L-
4 = C/Q
5 = GND (N24)

Overall dimensions and technical information are provided solely for informative purposes and may be modified without notice

ORDERING CODES
"521" standard version with SUB-D 15 poles

17_E2N. _ . D . ____ . __

VARIANT
- = Standard Version (no addictional letter required)
- **E** = External pressure feedback
- **A** = Exhaust downstream pressure when power supply is removed
- **AE** = A Variant + E Variant

PRESSURE RANGE :
- **0001** = Range 0 - 1 bar
- **0005** = Range 0 - 5 bar
- **0009** = Range 0 - 9 bar

MANAGEMENT :
- **C** = Current signal (4-20 mA / 0-20 mA)
- **T** = Voltage signal (0-10 V / 0-5 V / 1-5 V)

SIZE :
- **0** = Size 0
- **1** = Size 1
- **3** = Size 3

ORDERING CODES
"521" CANopen® version with SUB-D 15 poles

17_E2N. S . C . ____ . __

SIZE :
- **0** = Size 0
- **1** = Size 1
- **3** = Size 3

VARIANT
- = Standard Version (no addictional letter required)
- **E** = External pressure feedback
- **A** = Exhaust downstream pressure when power supply is removed
- **AE** = A Variant + E Variant

PRESSURE RANGE :
- **0001** = Range 0 - 1 bar
- **0005** = Range 0 - 5 bar
- **0009** = Range 0 - 9 bar

Accessories

Model with SUB-D 15 poles connector	
	5300.F15.00.00 : Straight connector + Casing IP65
	5300.F15.00.03 : Straight connector + Cable 3 meters
	5300.F15.00.05 : Straight connector + Cable 5 meters
	5300.F15.90.00 : 90° connector + Casing IP65
	5300.F15.90.03 : 90° connector + Cable 3 meters
	5300.F15.90.05 : 90° connector + Cable 5 meters

*** Whitout cable**

Fixing bracket
170M5

ORDERING CODES
"521 M12 version" - CANopen® version

17_E2N. M . C . ____ . __

SIZE :
- **0** = Size 0
- **1** = Size 1
- **3** = Size 3

VARIANT
- = Standard Version (no addictional letter required)
- **E** = External pressure feedback
- **A** = Exhaust downstream pressure when power supply is removed
- **AE** = A Variant + E Variant

PRESSURE RANGE :
- **0001** = Range 0 - 1 bar
- **0005** = Range 0 - 5 bar
- **0009** = Range 0 - 9 bar

Note:
This model doesn't include the terminating resistor

Accessoris

Model with M12 connector
POWER SUPPLY connector
Female straight connector M12A 4P
5312A.F04.00

Model with M12 connector
NETWORK connector
Male straight connector M12A 5P
5312A.M05.00

Fixing bracket
170M5

ORDERING CODES
"521 M12 BASIC version"

17_E2N. _ . M . ____ . __

SIZE :
- **0** = Size 0
- **1** = Size 1
- **3** = Size 3

MANAGEMENT :
- **C** = Current signal (4-20 mA)
- **T** = Voltage signal (0-10 V)

PRESSURE RANGE :
- **0001** = Range 0 - 1 bar
- **0005** = Range 0 - 5 bar
- **0009** = Range 0 - 9 bar

VARIANT
- = Standard Version (no addictional letter required)
- **E** = External pressure feedback
- **A** = Exhaust downstream pressure when power supply is removed
- **AE** = A Variant + E Variant

Note:
This model doesn't include display a keyboard. Therefore it is not possible to set the parameters. Unless specifically requested it is provided with all parameters set with default values. Personalisations are available.

Accessories

Model with M12 connector
POWER SUPPLY connector
Female straight connector M12A 4P
5312A.F04.00

Fixing bracket
170M5

Overall dimensions and technical information are provided solely for informative purposes and may be modified without notice

ORDERING CODES
"521 M12 version" - Standard version

17_E2N. _ . _ . ____ . _

VARIANT
- = Standard Version (no addictional letter required)
- **E** = External pressure feedback
- **A** = Exhaust downstream pressure when power supply is removed
- **AE** = A Variant + E Variant

PRESSURE RANGE
- **0001** = Range 0 - 1 bar
- **0005** = Range 0 - 5 bar
- **0009** = Range 0 - 9 bar

OUTPUT
- **F** = Voltage analogue output
- **G** = Current analogue output
- **H** = Digital output

MANAGEMENT
- **C** = Current signal (4-20 mA)
- **T** = Voltage signal (0-10 V)

SIZE
- **0** = Size 0
- **1** = Size 1
- **3** = Size 3

Accessories

Model with M12 connector
POWER SUPPLY connector
Female straight connector M12A 4P
5312A.F04.00

Fixing bracket
170M5

ORDERING CODES
"521 IO-Link version"

17_E2N. I . B . ____ . _

VARIANT:
- Standard version
- E = External pressure feedback
- A = Exhaust downstream circuit without power supply
- AE = A Variant + E Variant

PRESSURE RANGE:
- 0009 = Range 0 - 9 bar

SIZE
- 0 = Size 0
- 1 = Size 1
- 3 = Size 3

Accessories

Model with M12 connector
POWER SUPPLY connector
Female straight connector M12A 5P
5312A.F05.00

Fixing bracket
170M5

Series 1700 - Miniaturized proportional pressure regulator

General

Modern industrial applications constantly require more sophisticated and better performing pneumatic components .
Flexibility and adaptability are key factor when designing a machine. The possibility to change the application parameter during operation such as for example the speed of a cylinder or the force generated by a rotary actuator are beneficial to the designer.
In the past it was necessary to design complicated pneumatic circuits based on pneumatic logic elements which required a lot of space and complicated set up, today, thanks to the electronic proportional regulators such operations are extremely easy to achieve and offer even more flexibility.

Pneumax miniaturized proportional regulators series integrates all the main features of the 521 series with the exclusion of the display and analogue/digital output.
High precision in pressure regulation, fast response speed, assembling options and reduced dimensions are the main advantages.

Features

Pneumatic	Fluid	Air filtered at 5 micron and dehumidified	
	Minimum inlet pressure	Desired outlet pressure + 1 bar	
	Maximum inlet pressure	10 bar	
	Outlet pressure	Ordering code	009
		Pressure value	0 - 9 bar
	Nominal flowrate from 1 to 2 (6 bar Δp 1 bar)	7 Nl /min	
	Discharge flowrate (at 6 bar with 1 bar overpressure)	7 Nl /min	
	Air consumption	M5 / Ø4	
	Operating connection	M5 / Ø4	
	Exhaust connection	M5 / Ø4	
	Maximum fitting tightening	3 Nm	
Electric	Supply voltage	24VDC ± 10% (stabilised with ripple <1%)	
	Standby current consumption	55 mA	
	Current consumption with solenoid valves on	145 mA	
	Reference signal	Voltage*	0 - 10 V
		Current*	4 - 20 mA
	Input impedance	Voltage	10 KΩ
		Current	250 Ω
	Analog outputs voltage	0,2 - 10 V (10 V to 9 bar)	
	Connector	M8 4 poles	
Functional	Linearity	< ± 0,3 % F.S.	
	Hysteresis	<0,3 % F.S.	
	Repeatability	< ± 0,5 % F.S.	
	Sensitivity	< ± 0,5 % F.S.	
	Assembly position	Indifferent	
	Protection grade	IP65 (with casing fitted)	
	Ambient temperature	-5° - 50°C / 23° - 122°F	
Constructional	Body	Technopolymer	
	Seals	NBR	
	Cover for electrical part	Technopolymer	
	Weight	60 g	

*** Request during ordering process**

Overall dimensions and technical information are provided solely for informative purposes and may be modified without notice

Proportional pressure regulator

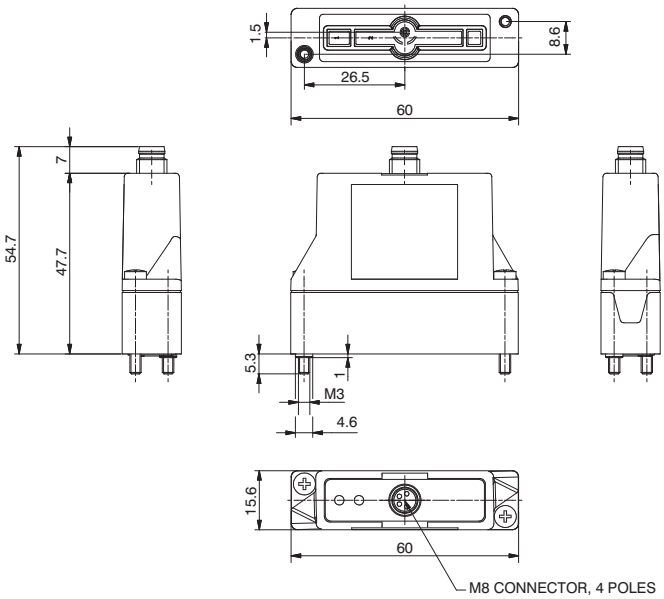

Ordering code	
170EⓅM.Ⓥ.M.Ⓖ	
Ⓟ	PROTECTION
	0 = Parameter 18 active
	2 = Parameter 18 not active
Ⓥ	VERSION
	T = Voltage signal
	C = Current signal
Ⓖ	PRESSURE RANGE
	001= Range 0 - 1 bar
	005= Range 0 - 5 bar
	009= Range 0 - 9 bar

M8 CONNECTOR, 4 POLES

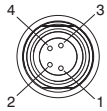

PIN	DESCRIPTION
1	+24 VDC
2	ANALOG INPUT
3	GND
4	ANALOG OUTPUT

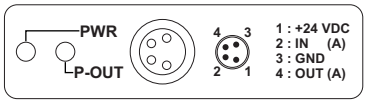

PWR	Green Led: The regulator is properly powered
P-OUT	Green Led: lights up when the outlet pressure is higher than the desired pressure minus 0.2 bar and less than the desired pressure more 0.2 bar

MOUNTING INTERFACE

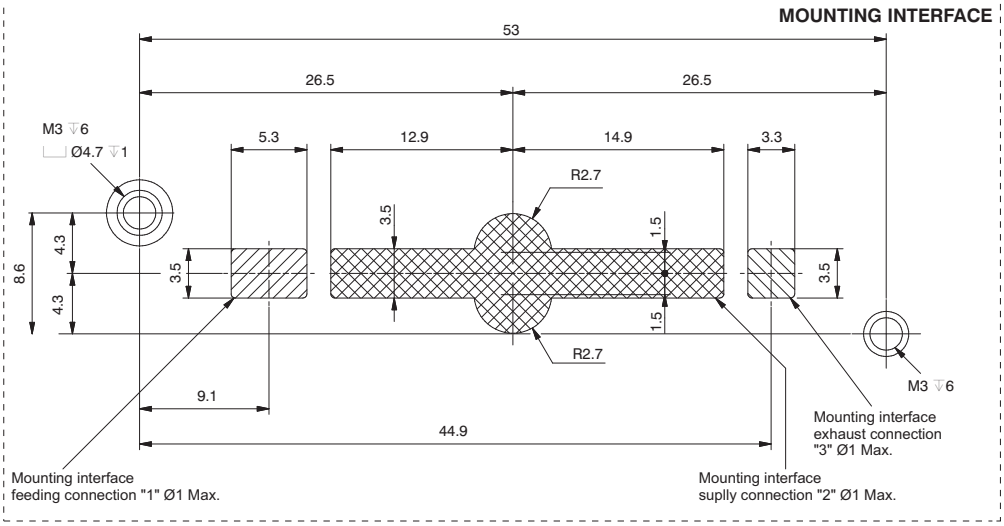

Proportional Pressure Regulator c/w M5 In-Line Single Base

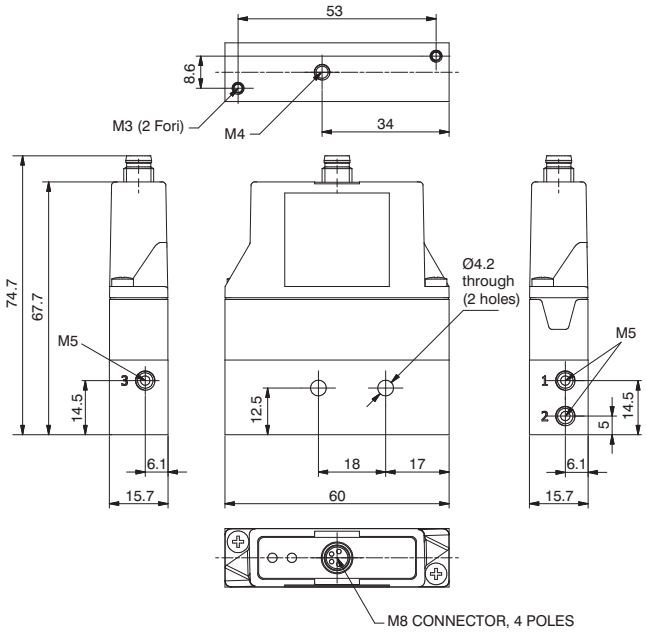

Ordering code
170EⓅM.Ⓥ.M.Ⓖ.FO

Ⓟ	PROTECTION
	0 = Parameter 18 active
	2 = Parameter 18 not active
Ⓥ	VERSION
	T = Voltage signal
	C = Current signal
Ⓖ	PRESSURE RANGE
	001= Range 0 - 1 bar
	005= Range 0 - 5 bar
	009= Range 0 - 9 bar

Weight: 110 g

M5 In-Line Single Base

Ordering code
170M1.FO

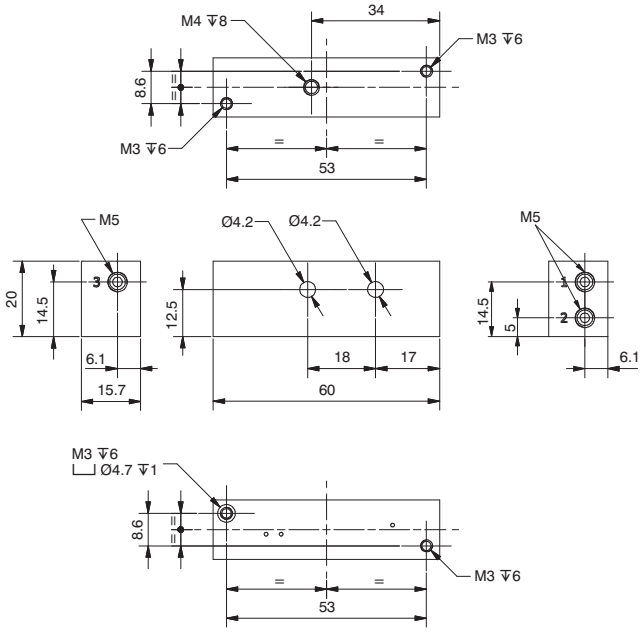

Weight: 50 g

Overall dimensions and technical information are provided solely for informative purposes and may be modified without notice

Proportional Pressure Regulator c/w M5 Bottom Entry Base

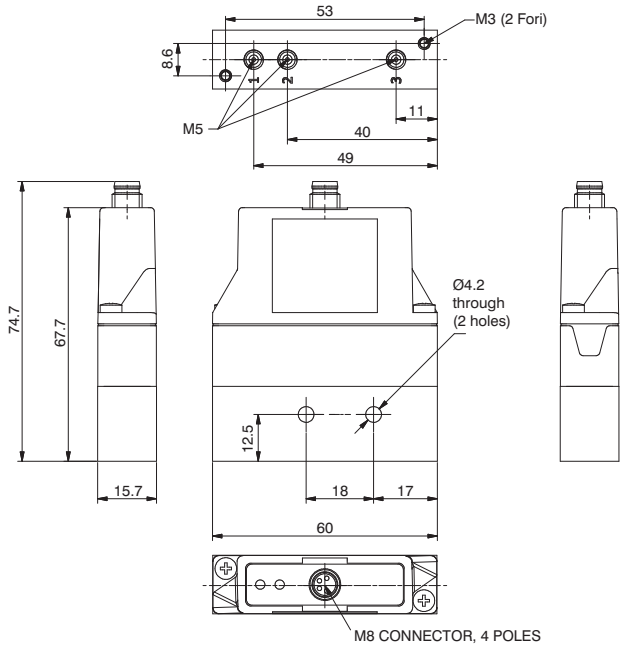

Ordering code
170EⓅM.Ⓥ.M.Ⓖ.FV

Ⓟ	PROTECTION
	0 = Parameter 18 active
	2 = Parameter 18 not active
Ⓥ	VERSION
	T = Voltage signal
	C = Current signal
Ⓖ	PRESSURE RANGE
	001= Range 0 - 1 bar
	005= Range 0 - 5 bar
	009= Range 0 - 9 bar

Weight: 110 g

M5 Bottom Entry Single Base

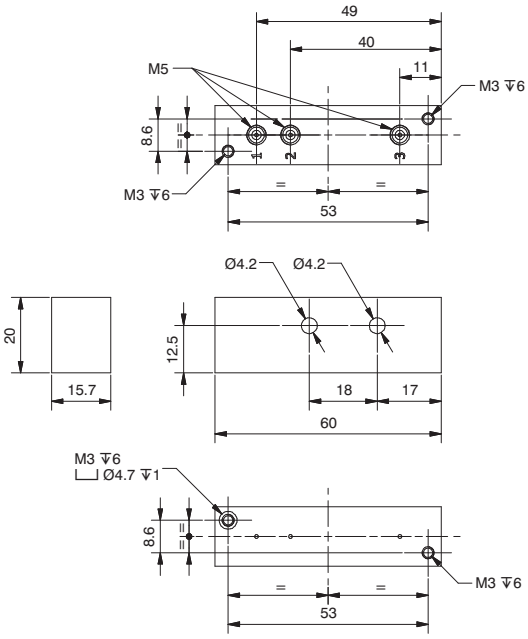

Ordering code
170M1.FV

Weight: 50 g

Proportional Pressure Regulator c/w Modular In-Line Base

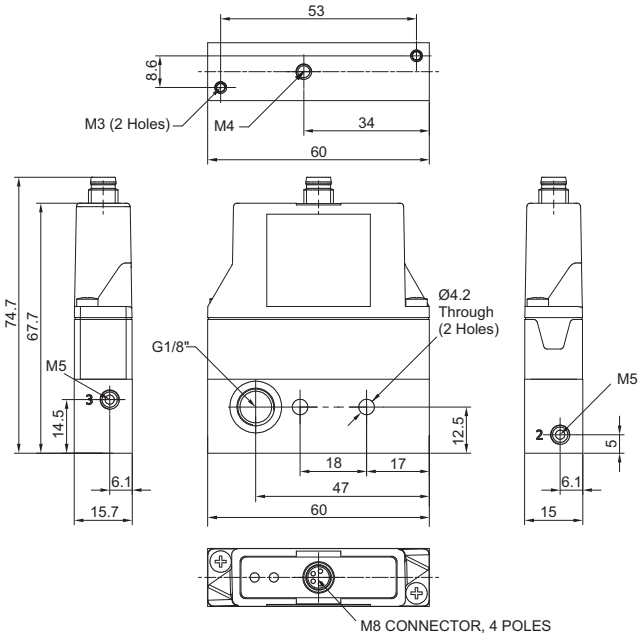

Ordering code
170EⓅM.Ⓥ.M.Ⓖ.FP

Ⓟ	PROTECTION
	0 = Parameter 18 active
	2 = Parameter 18 not active
Ⓥ	VERSION
	T = Voltage signal
	C = Current signal
Ⓖ	PRESSURE RANGE
	001= Range 0 - 1 bar
	005= Range 0 - 5 bar
	009= Range 0 - 9 bar

Weight: 110 g

Single Modular In-Line Base

Ordering code
170M1.FP

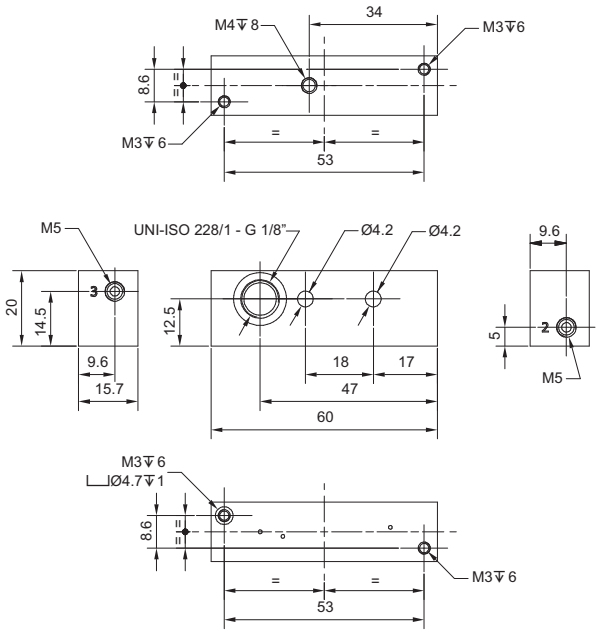

Weight: 50 g

Overall dimensions and technical information are provided solely for informative purposes and may be modified without notice

Proportional Pressure Regulator c/w 4mm In-Line Single base

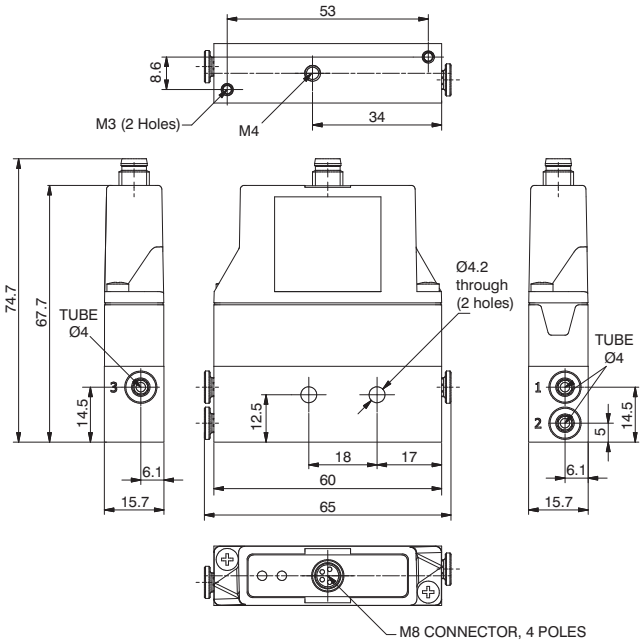

Ordering code	
170EⓅM.Ⓥ.M.Ⓖ.TO	
Ⓟ	PROTECTION
	0 = Parameter 18 active
	2 = Parameter 18 not active
Ⓥ	VERSION
	T = Voltage signal
	C = Current signal
Ⓖ	PRESSURE RANGE
	001= Range 0 - 1 bar
	005= Range 0 - 5 bar
	009= Range 0 - 9 bar

Weight: 110 g

Single 4mm In-Line Base

Ordering code
170M1.TO

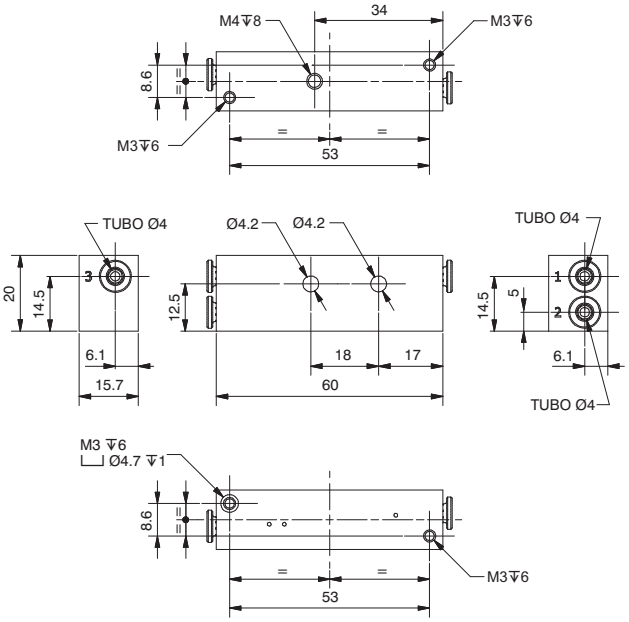

Weight: 50 g

Proportional Pressure Regulator c/w 4mm Bottom Entry Single Base

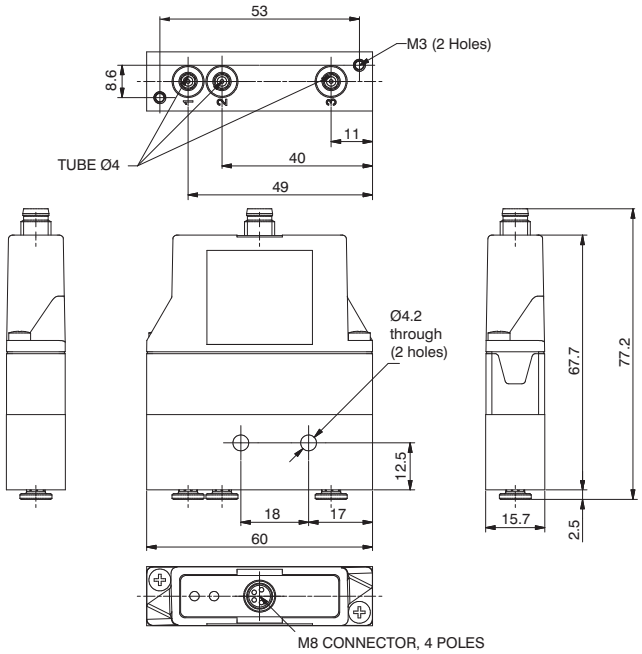

Ordering code	
170EⓅM.Ⓥ.M.Ⓖ.TV	
Ⓟ	PROTECTION
	0 = Parameter 18 active
	2 = Parameter 18 not active
Ⓥ	VERSION
	T = Voltage signal
	C = Current signal
Ⓖ	PRESSURE RANGE
	001= Range 0 - 1 bar
	005= Range 0 - 5 bar
	009= Range 0 - 9 bar

Weight: 110 g

Single 4mm Bottom Entry Base

Ordering code
170M1.TV

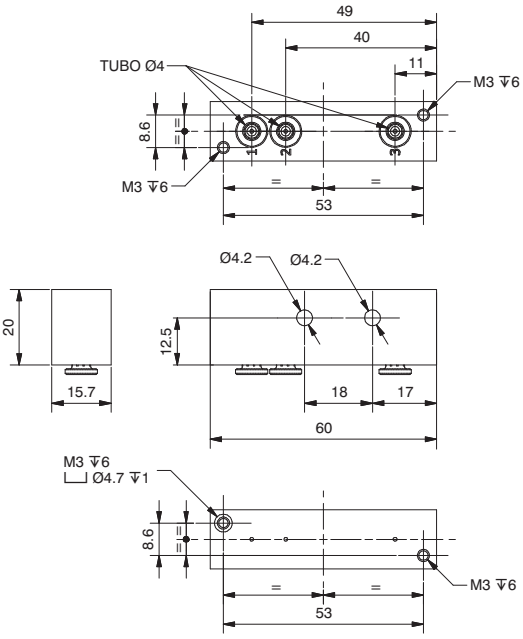

Weight: 50 g

Overall dimensions and technical information are provided solely for informative purposes and may be modified without notice

Proportional Pressure Regulator c/w 4mm In-Line Modular Base

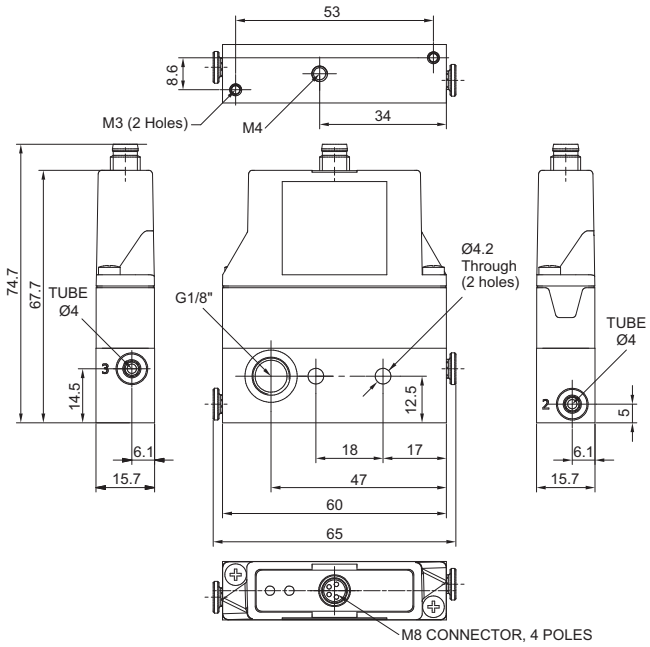

Ordering code
170EⓅM.Ⓥ.M.Ⓖ.TP

Ⓟ	PROTECTION
	0 = Parameter 18 active
	2 = Parameter 18 not active
Ⓥ	VERSION
	T = Voltage signal
	C = Current signal
Ⓖ	PRESSURE RANGE
	001= Range 0 - 1 bar
	005= Range 0 - 5 bar
	009= Range 0 - 9 bar

Weight: 110 g

Single 4mm In-Line Modular Base

Ordering code
170M1.TP

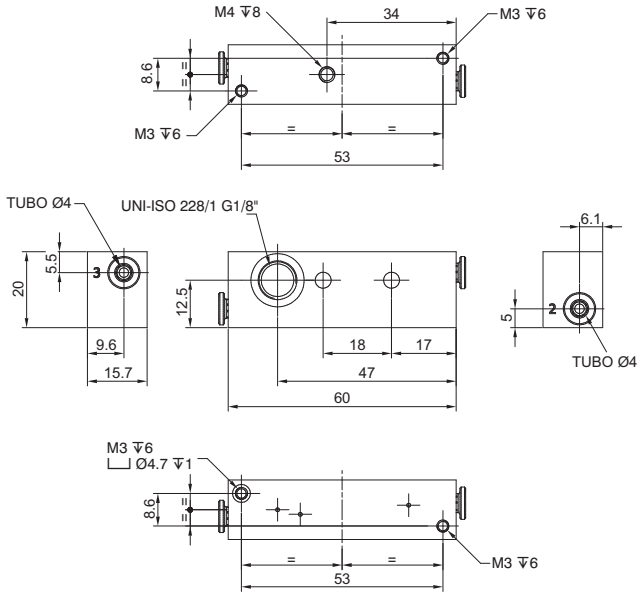

Weight: 50 g

Proportional pressure regulator with external feedback

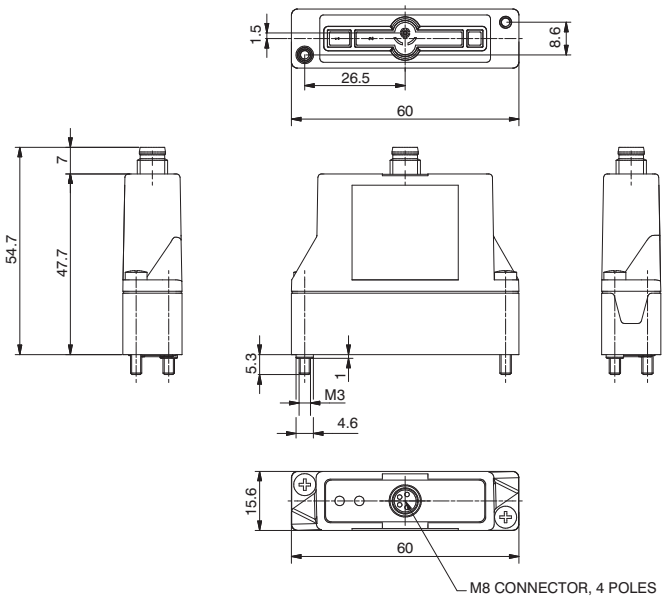

Ordering code	
170E Ⓟ M.Ⓥ.M.Ⓖ.E	
Ⓟ	PROTECTION
	0 = Parameter 18 active
	2 = Parameter 18 not active
Ⓥ	VERSION
	T = Voltage signal
	C = Current signal
Ⓖ	PRESSURE RANGE
	001= Range 0 - 1 bar
	005= Range 0 - 5 bar
	009= Range 0 - 9 bar

M8 CONNECTOR, 4 POLES

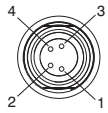

PIN	DESCRIPTION
1	+24 VDC
2	ANALOG INPUT
3	GND
4	ANALOG OUTPUT

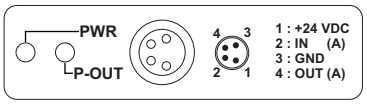

PWR	Green Led: The regulator is properly powered
P-OUT	Green Led: lights up when the outlet pressure is higher than the desired pressure minus 0.2 bar and less than the desired pressure more 0.2 bar

MOUNTING INTERFACE

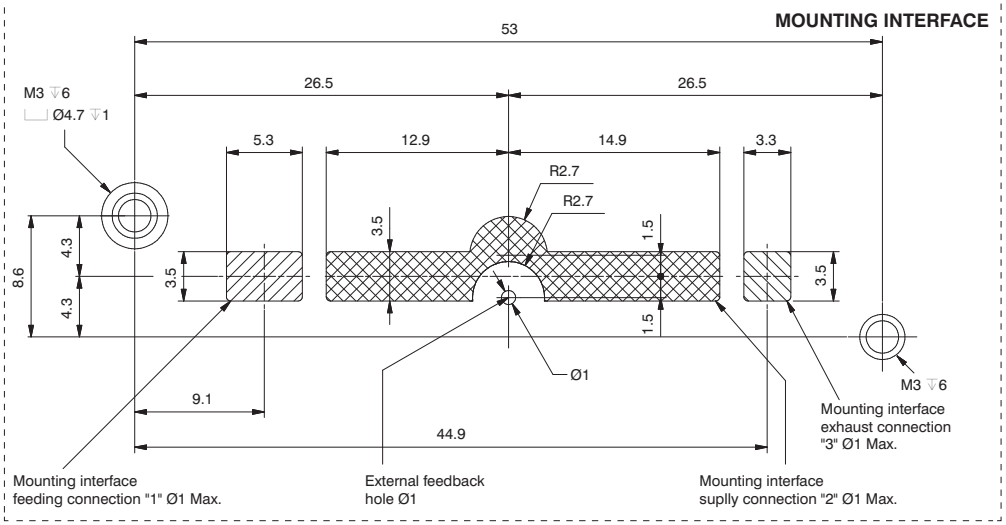

Overall dimensions and technical information are provided solely for informative purposes and may be modified without notice

Proportional Pressure Regulator c/w M5 In-Line Single Base with External Feedback

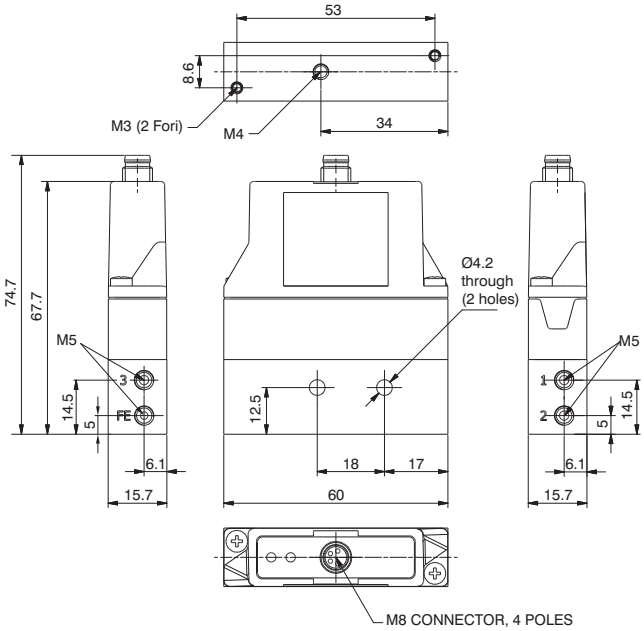

Ordering code	
170EⓅM.Ⓥ.M.Ⓖ.EFO	
Ⓟ	PROTECTION
	0 = Parameter 18 active
	2 = Parameter 18 not active
Ⓥ	VERSION
	T = Voltage signal
	C = Current signal
Ⓖ	PRESSURE RANGE
	001= Range 0 - 1 bar
	005= Range 0 - 5 bar
	009= Range 0 - 9 bar

Weight: 110 g

Single M5 In-Line Base with External Feedback

Ordering code
170M1.EFO

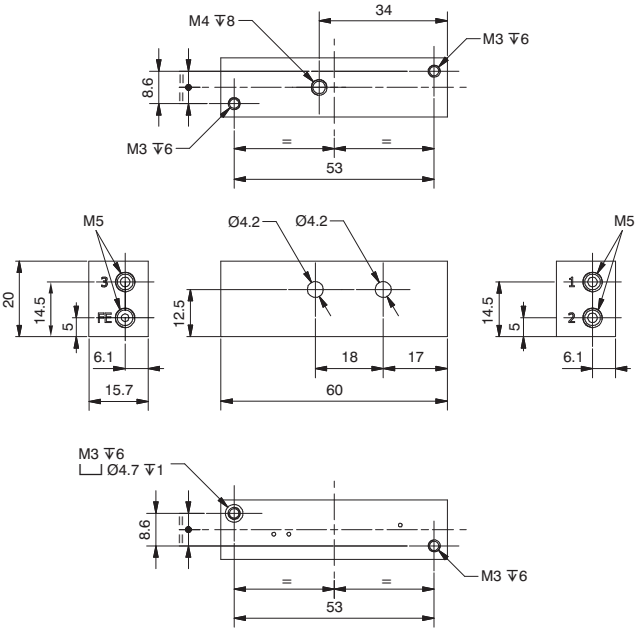

Weight: 50 g

Proportional Pressure Regulator c/w M5 Bottom Entry Base with External Feedback

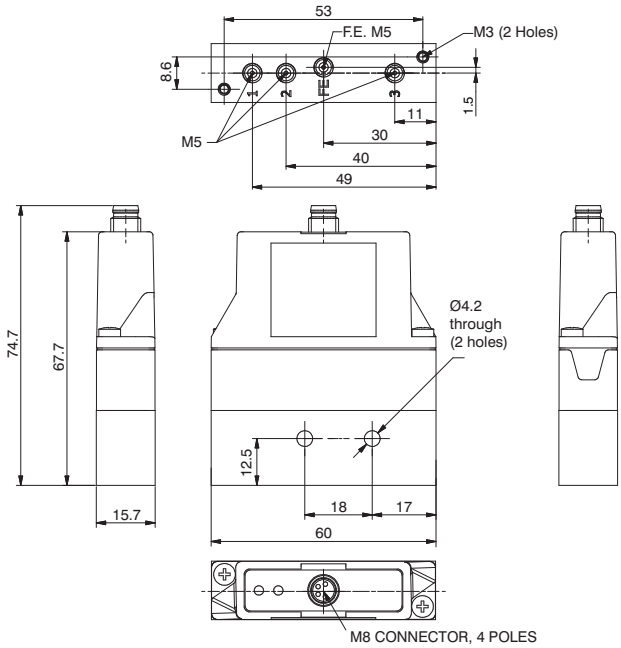

Ordering code	
170EⓅM.Ⓥ.M.Ⓖ.EFV	
Ⓟ	PROTECTION
	0 = Parameter 18 active
	2 = Parameter 18 not active
Ⓥ	VERSION
	T = Voltage signal
	C = Current signal
Ⓖ	PRESSURE RANGE
	001= Range 0 - 1 bar
	005= Range 0 - 5 bar
	009= Range 0 - 9 bar

Weight: 110 g

Single M5 Bottom Entry Base with External Feedback

Ordering code
170M1.EFV

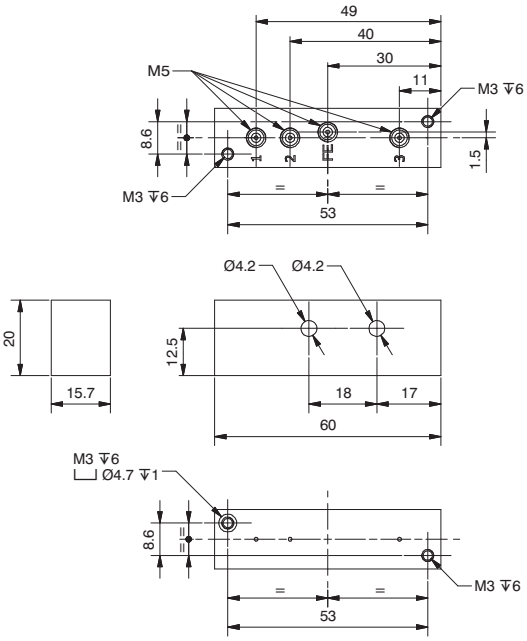

Weight: 50 g

Overall dimensions and technical information are provided solely for informative purposes and may be modified without notice

Proportional Pressure Regulator c/w 4mm In-Line Single Base with External Feedback

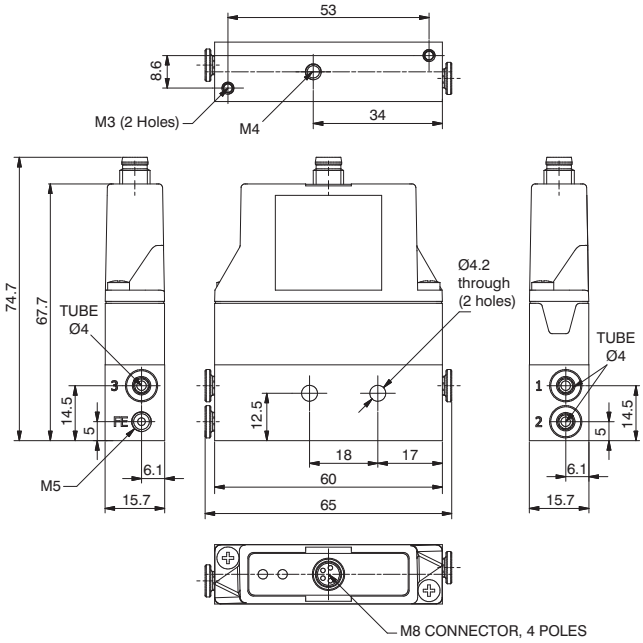

Ordering code	
170EⓅM.Ⓥ.M.Ⓖ.ETO	
Ⓟ	PROTECTION
	0 = Parameter 18 active
	2 = Parameter 18 not active
Ⓥ	VERSION
	T = Voltage signal
	C = Current signal
Ⓖ	PRESSURE RANGE
	001= Range 0 - 1 bar
	005= Range 0 - 5 bar
	009= Range 0 - 9 bar

Weight: 110 g

Single 4mm In-Line Base with External Feedback

Ordering code
170M1.ETO

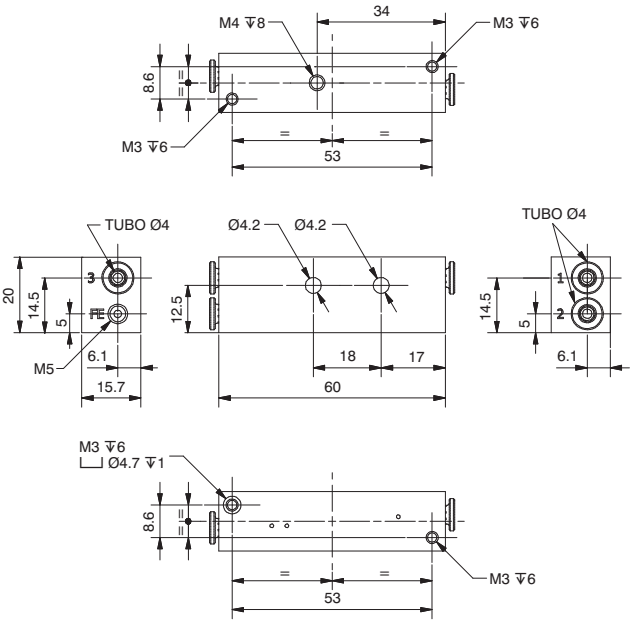

Weight: 50 g

Proportional Pressure Regulator c/w 4mm Bottom Entry Single Base with External Feedback

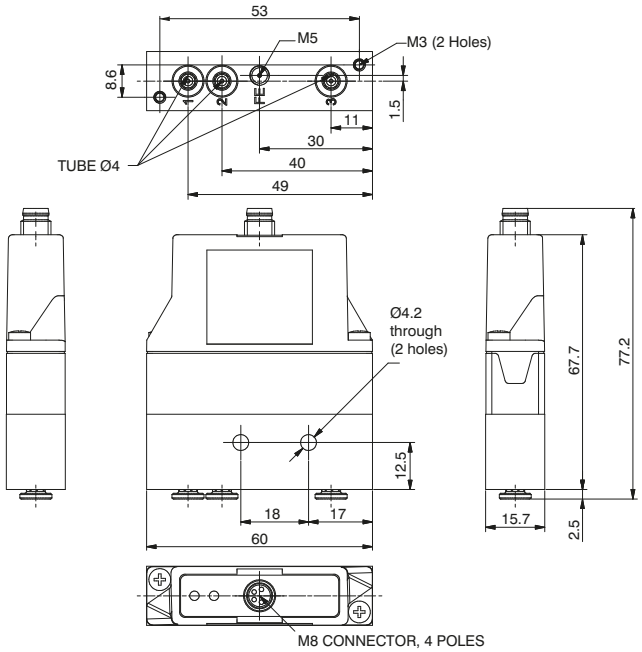

Ordering code	
170EⓅM.Ⓥ.M.Ⓖ.ETV	
Ⓟ	PROTECTION
	0 = Parameter 18 active
	2 = Parameter 18 not active
Ⓥ	VERSION
	T = Voltage signal
	C = Current signal
Ⓖ	PRESSURE RANGE
	001= Range 0 - 1 bar
	005= Range 0 - 5 bar
	009= Range 0 - 9 bar

Weight: 110 g

Single 4mm Bottom Entry Base with External Feedback

Ordering code
170M1.ETV

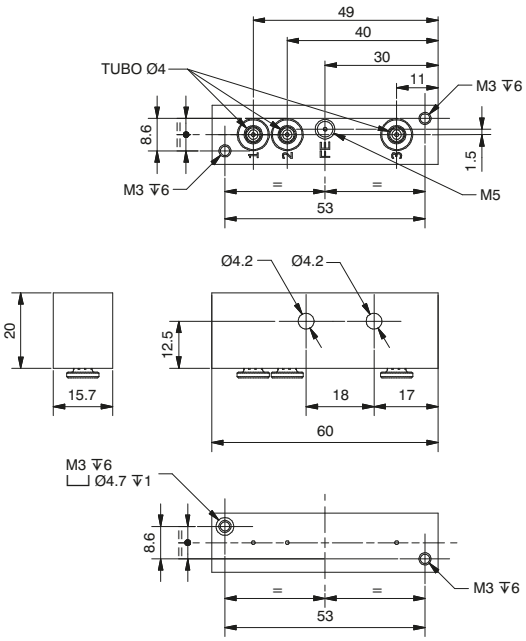

Weight: 50 g

Overall dimensions and technical information are provided solely for informative purposes and may be modified without notice

Coding For Proportional Pressure Regulator Modular Manifold

It is possible to assemble a manifold of Miniature Proportional Regulators to a maximum of 12 Regulators.
For the coding of the Manifold, refer to the configuration Table below.
The Regulators are feed by a single supply pressure via the G1/8" connection. In the Manifold, the Pressure Regulators operate independently, the output pressure is supplied via the M5 or 4mm output connection depending on the model requested. The electrical signal is controlled via the M8 connector.
There are also configured single bases up to a maximum of 12 positions with power supplies and independent consumptions (See following pages).

G	1	7	0	_	_	_	M	_	_	_	_	P	_
Group	**Series**		**Size**	**Parameter 18**	**N. Places**	**Control Type**	**Electrical connection**	**Pressure range**			**Connection**	**Version**	**Options**
				0=Eco P18 On	**A**=02	**T**=Voltage		**001**=0 - 1 bar			**T**=Tube Ø4		= Standard *
				2=Eco P18 Off	**B**=03	**C**=Current		**005**=0 - 5 bar			**F**=M5 Thread		**E**= External feedback
					C=04			**009**=0 - 9 bar					* no additional letter required
					D=05								
					E=06								
					F=07								
					G=08								
					H=09								
					I=10								
					L=11								
					M=12								

Example	
Code	G1700ITM009FP
Description	10 Position Miniature Proportional Pressure Regulator, Voltage controlled with M5 Outputs

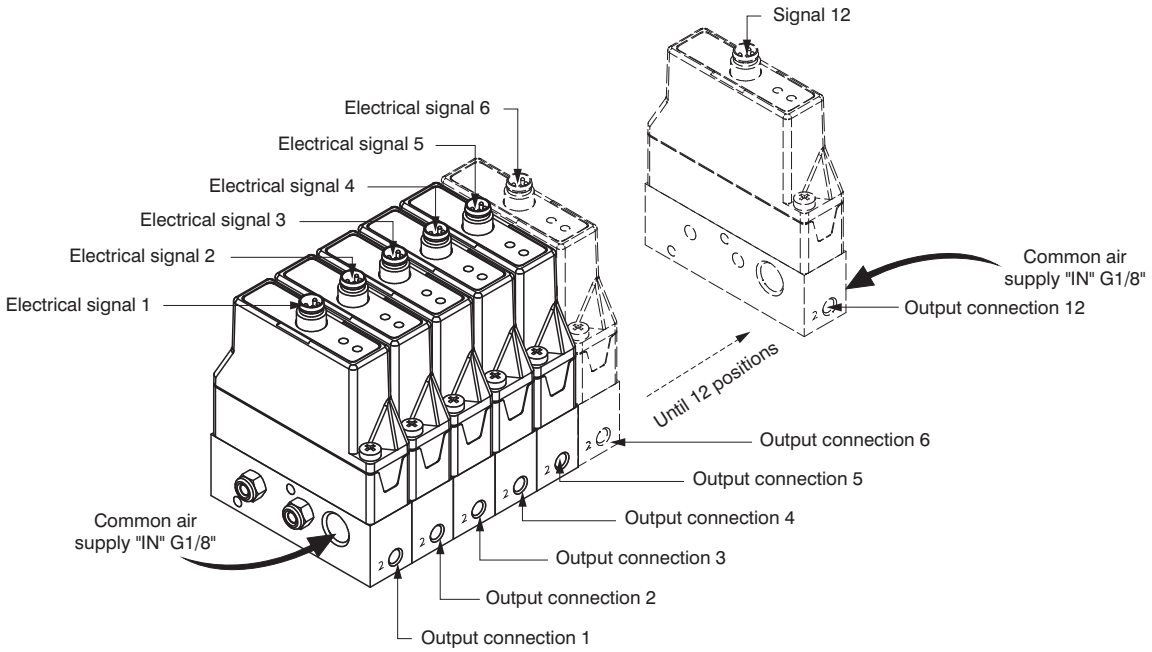

Multiple M5 In-Line Base

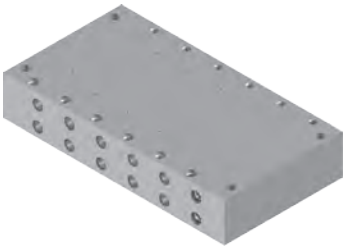

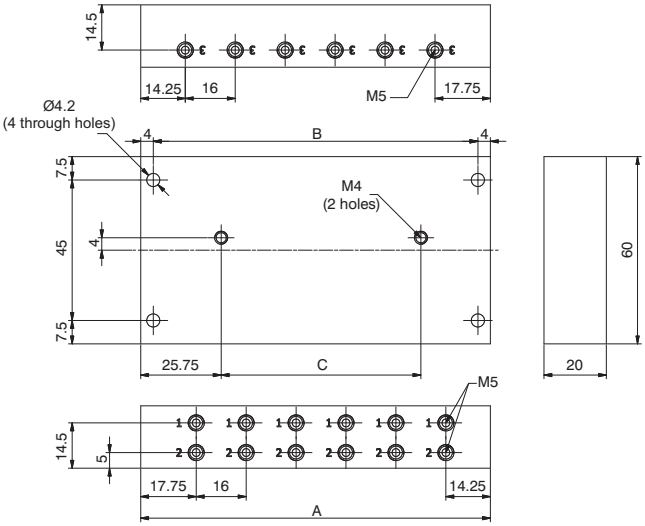

	N° PLACES								
DIMEN.	2 PLA.	3 PLA.	4 PLA.	5 PLA.	6 PLA.	7 PLA.	8 PLA.	9 PLA.	10 PLA.
A	48	64	80	96	112	128	144	160	176
B	40	56	72	88	104	120	136	152	168
C	0	16	32	48	64	80	96	112	128

Ordering code	
170MⓃ.FO	
Ⓝ	N. PLACES
	2=2 places (weight gr.100)
	3=3 places (weight gr.150)
	4=4 places (weight gr.200)
	5=5 places (weight gr.250)
	6=6 places (weight gr.300)
	7=7 places (weight gr.350)
	8=8 places (weight gr.400)
	9=9 places (weight gr.450)
	10=10 places (weight gr. 500)

Multiple M5 Bottom Entry Base

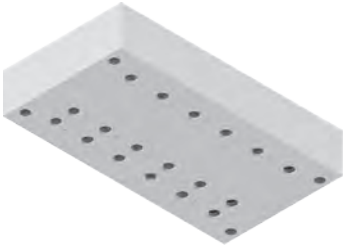

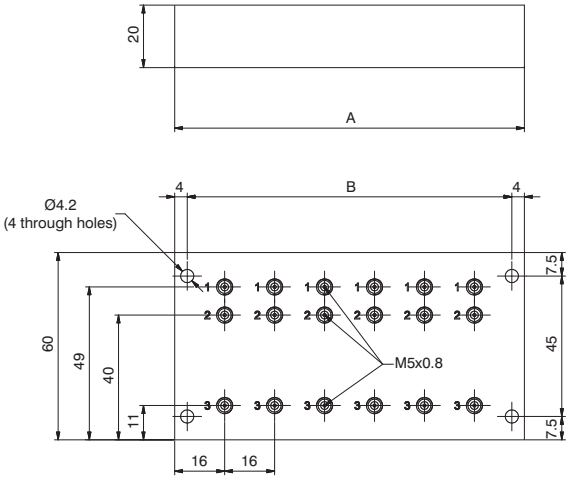

	N° PLACES								
DIMEN.	2 PLA.	3 PLA.	4 PLA.	5 PLA.	6 PLA.	7 PLA.	8 PLA.	9 PLA.	10 PLA.
A	48	64	80	96	112	128	144	160	176
B	40	56	72	88	104	120	136	152	168

Ordering code	
170MⓃ.FV	
Ⓝ	N. PLACES
	2=2 places (weight gr.100)
	3=3 places (weight gr.150)
	4=4 places (weight gr.200)
	5=5 places (weight gr.250)
	6=6 places (weight gr.300)
	7=7 places (weight gr.350)
	8=8 places (weight gr.400)
	9=9 places (weight gr.450)
	10=10 places (weight gr. 500)

Overall dimensions and technical information are provided solely for informative purposes and may be modified without notice

Multiple M5 In-Line Base with External Feedback

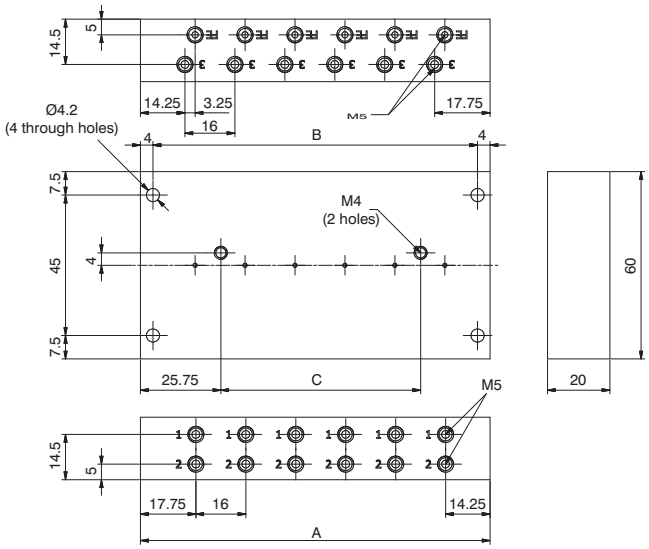

Ordering code
170MⓃ.EFO

Ⓝ	N. PLACES
	2=2 places (weight gr.100)
	3=3 places (weight gr.150)
	4=4 places (weight gr.200)
	5=5 places (weight gr.250)
	6=6 places (weight gr.300)
	7=7 places (weight gr.350)
	8=8 places (weight gr.400)
	9=9 places (weight gr.450)
	10=10 places (weight gr. 500)

	N° PLACES								
DIMEN.	2 PLA.	3 PLA.	4 PLA.	5 PLA.	6 PLA.	7 PLA.	8 PLA.	9 PLA.	10 PLA.
A	48	64	80	96	112	128	144	160	176
B	40	56	72	88	104	120	136	152	168
C	0	16	32	48	64	80	96	112	128

Multiple M5 Bottom Entry Base with External Feedback

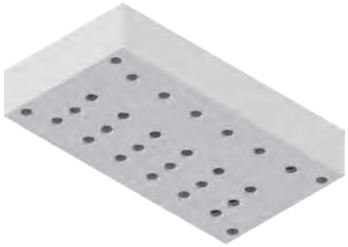

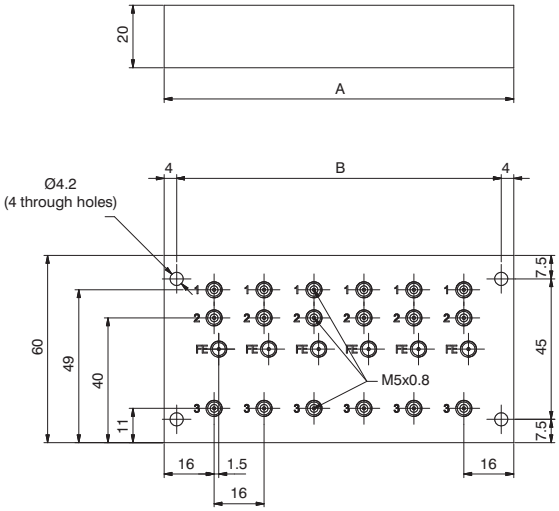

Ordering code
170MⓃ.EFV

Ⓝ	N. PLACES
	2=2 places (weight gr.100)
	3=3 places (weight gr.150)
	4=4 places (weight gr.200)
	5=5 places (weight gr.250)
	6=6 places (weight gr.300)
	7=7 places (weight gr.350)
	8=8 places (weight gr.400)
	9=9 places (weight gr.450)
	10=10 places (weight gr. 500)

	N° PLACES								
DIMEN.	2 PLA.	3 PLA.	4 PLA.	5 PLA.	6 PLA.	7 PLA.	8 PLA.	9 PLA.	10 PLA.
A	48	64	80	96	112	128	144	160	176
B	40	56	72	88	104	120	136	152	168

Clip

Ordering code
800.00

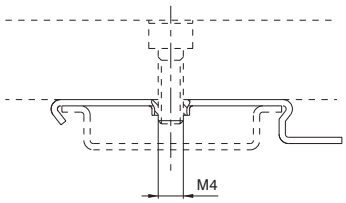

Weight g 5

Mini digital pressure switch

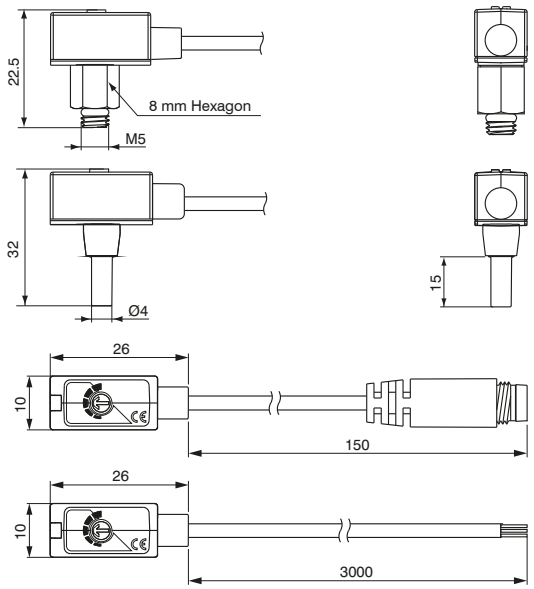

Ordering code	
DS.10.P.B.Ⓒ.Ⓛ.Ⓞ	
Ⓒ	CONNECTION
	F4=Male M5
	R4=Plug-in connection Ø4
Ⓛ	CABLE LENGTH
	A=150 mm *
	E=3000 mm **
Ⓞ	OPTIONS
	0=Without connector
	1=With connector M8 male 3 Pin

* only with M8 connector
** only without connector

Technical features

Working pressure range		0 - 0.6 mPa
Regulation pressure range		0 - 0.6 mPa
Maximum supported pressure		1.5 mPa
Allowed fluids		Air, non-corrosive gases, non-combustible gases
Supply voltage		From 12 to 30 VDC ±10%
Current consumption		≤ 10mA
Digital output		PNP N.O. 1 outputs Maximum load current: 80mA Maximum supply voltage: 30VDC Voltage drop: ≤0.8V
Repeatability (Digital output)		± 1% Full Scale
Digital output	Type of hysteresis	fixed
	Hysteresis	3% Full Scale max.
Response time		1ms
Protection from short circuit at output		Present
Method of setting threshold		Adjustable, trimmer
Indicator		LED red (output)
Ingress protection rating	Protection class	IP40
	Ambient temperature	Operational: 0 - 60°C, Storage: -20 - 70°C (without ice or condensation)
	Ambient humidity	Operational/Storage: 35 - 85% (without condensation)
	Vibration	Total amplitude 1.5mm.,10Hz-55Hz-10Hz scanning for 1 minute, 2 hours in each direction of X, Y and Z
	Impacts/shocks	980m/s² (100G), 3 times in each direction of X, Y and Z
Temperature characteristics		±2% Full Scale in a range between 0 - 50°C
Type of connection		Male M5x0.8, Plug-in connection Ø4
Electrical cable		Oilproof cable, 3 wires (0.18mm²), Ø2.6mm
Weight		Approximately 50 gr. (with 3 metres of cable)

Output circuit wiring scheme

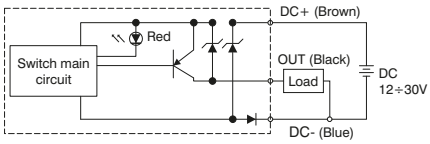

Overall dimensions and technical information are provided solely for informative purposes and may be modified without notice

Panel-mounted digital pressure switch

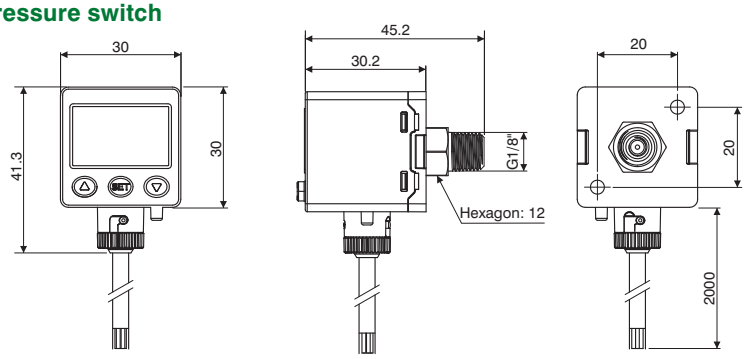

Ordering code	
DS.45.P.U.F3.D.0	
U	OUTPUTS E=2 PNP outputs + Analog output (4 / 20 mA) L=2 PNP outputs + copy function

Technical features		
Working pressure range		0.000 - 1.000 mPa
Regulation pressure range		-0.100 - 1.000 mPa
Maximum supported pressure		1.5 mPa
Allowed fluids		Air, non-corrosive gases, non-combustible gases
Pressure calibration sensitivity	kPa	0.1
	kgf/cm²	0.001
	bar	0.001
	psi	0.01
	InHg	0.1
Supply voltage		From 12 to 24 VDC
Current consumption		≤40mA (without load)
Digital output		PNP N.O. 2 outputs Maximum load current: 125mA Maximum supply voltage: 24VDC Voltage drop: ≤1.5V
Repeatability (Digital output)		± 0.2% Full Scale ± 1 digit
Digital output	Type of hysteresis	Settable
	Hysteresis	from 0.001 to 0.008 bar
Response time		≤2,5 ms (anti-interference function: 25ms, 100ms, 250ms, 500ms, 1000ms and 1500ms selectable)
Protection from short circuit at output		Present
Display		Display with 3 1/2 digits (red/Green)
Indicator precision		±2% F. S. ±1 digit
Indicator		LED Orange (output1) LED Orange (output2)
Analog output		Output current: 4÷20mA ±2.5% F. S. Linearity: ±1% F. S. Maximum load resistance: 250Ω supply at 12V and 600Ω supply at 24V Minimum load resistance: 50Ω
Ingress protection rating	Protection class	IP65
	Ambient temperature	Operational: 0 - 50°C, Storage: -10 - 60°C (without ice or condensation)
	Ambient humidity	Operation/Storage: 35 - 85% (without condensation)
	Supported voltage	1000VAC in 1min. (between body and cable)
	Insulation resistance	50MΩ (at 500VDC, between body and cable)
	Vibration	Total amplitude 1.5mm or 10G,10Hz-55Hz-10Hz scanning for 1 minute, 2 hours in each direction of X, Y and Z
	Impacts/shocks	100m/s² (10G), 3 times in each direction of X, Y and Z
Temperature characteristics		±2.5% Full Scale in a range between 0 - 50°C
Type of connection		G1/8" (BSPP), M5 female
Electrical cable		Oil resistant cable (internal 0.15mm²)
Weight		Approximately 86 gr. (with 2 metres of cable)

Output circuit wiring scheme

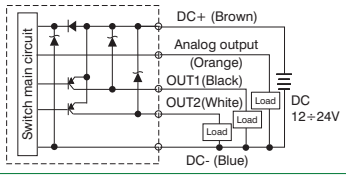

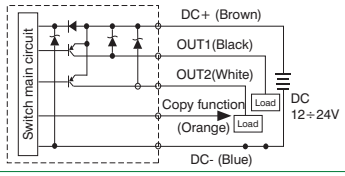

Accessories

Fastening bracket

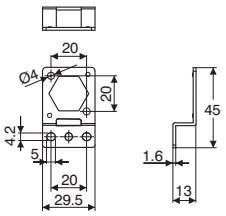

Ordering code
DS.BT10

Panel mount adapter

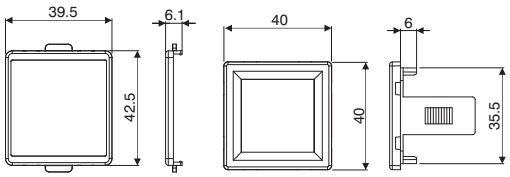

Ordering code
DS.PAE

Fastening bracket

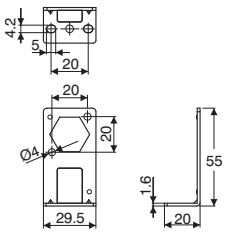

Ordering code
DS.BT11

Panel mount adapter with screen protection

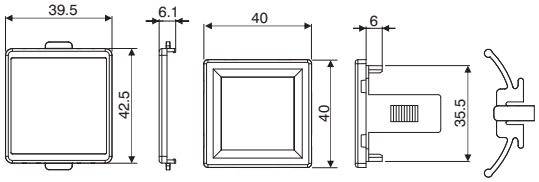

Ordering code
DS.PAF

Digital battery pressure gauge

Ordering code
DS.60.P.I.F1.F.0

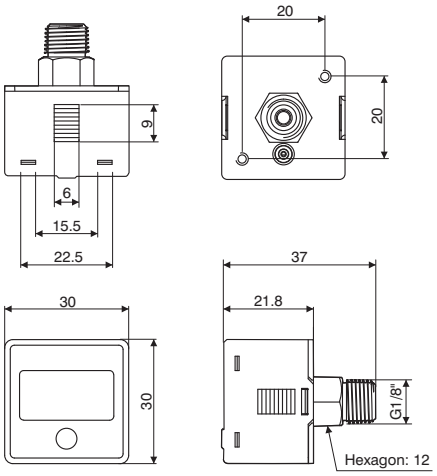

Technical features

Working pressure range		0.000 - 1.000 mPa
Regulation pressure range		-0.100 - 1.000 mPa
Maximum supported pressure		1.5 mPa
Allowed fluids		Air, non-corrosive gases, non-combustible gases
Pressure calibration sensitivity	kPa	0.1
	bar	0.01
	psi	0.1
	mmHg	1
Battery		CR 2032 lithium
Backlight		Not present
Battery life		3 years (5 powerups a day)
Indication of battery level		Present
Battery replaceable		Yes
Display powerup time		Goes off after 60 seconds
Sampling frequency		2 Hz (2 times per second)
Repeatability		±1% F. S. ±1 digit
Display		Display with 3 1/2 digits
Indicator precision		±2% F.S. ±1 digit (at ambient temperature of 25°C ±3°C)
Ingress protection rating	Protection class	IP65 (only with connected air pipe)
	Ambient temperature	Operational: 0 - 50°C, Storage: -10 - 60°C (without ice or condensation)
	Ambient humidity	Operational/Storage 35 - 85% (without condensation)
	Vibration	Total amplitude 1.5mm or 10G,10Hz-55Hz-10Hz scanning for 1 minute,2 hours in each direction of X,Y and Z
	Impacts/shocks	100m/s² (10G), 3 times in each direction of X, Y and Z
Temperature characteristics		±2% Full Scale in a range between 0 - 50°C
Type of connection		R1/8", M5 female
Weight		Approximately 40 gr.

Accessories

Fastening bracket

Ordering code
DS.BT5

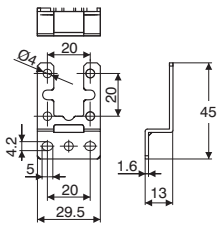

Panel mount adapter

Ordering code
DS.PAC

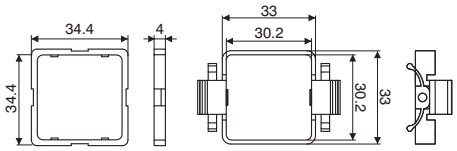

Fastening bracket

Ordering code
DS.BT6

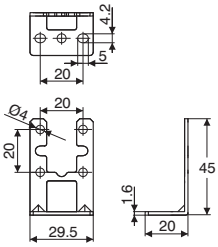

Panel mount adapter with screen protection

Ordering code
DS.PAD

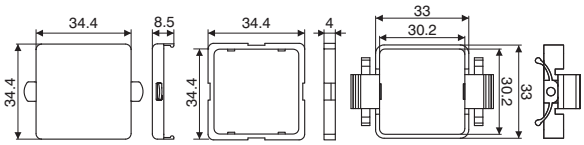

Overall dimensions and technical information are provided solely for informative purposes and may be modified without notice

Digital pressure gauge

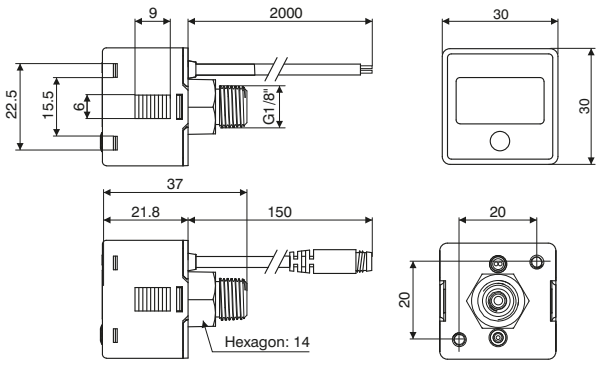

Ordering code	
DS.61.P.I.F1.L.O	
L	CABLE LENGTH
	A=150 mm *
	D=2000 mm **
O	OPTIONS
	0=Without connector
	2=With connector M8 male 4 Pin

* only with M8 connector
** only without connector

Technical features

Working pressure range		0.000 - 1.000 mPa
Regulation pressure range		-0.100 - 1.000 mPa
Maximum supported pressure		1.5 mPa
Allowed fluids		Air, non-corrosive gases, non-combustible gases
Pressure calibration sensitivity	kPa	1
	kgf/cm²	0.01
	bar	0.01
	psi	0.1
Supply voltage		From 12 to 24 VDC ± 10%
Current consumption		10mA
Repeatability		± 1% Full Scale ±1 digit
Display		Display with 3 1/2 digits (sampling 5 times per sec.)
Indicator precision		±2% F. S. ±1 digit (at ambient temperature of 25°C ±3°C)
Ingress protection rating	Protection class	IP65 (only with connected air pipe)
	Ambient temperature	Operational: 0 - 50°C, Storage: -10 - 60°C (without ice or condensation)
	Ambient humidity	Operation/Storage: 35 - 85% (without condensation)
	Supported voltage	1000VAC in 1 min. (between body and cable)
	Insulation resistance	50MΩ (at 500VDC, between body and cable)
	Vibration	Total amplitude 1.5mm or 10G,10Hz-55Hz-10Hz scanning for 1 minute,2 hours in each direction of X,Y and Z
	Impacts/shocks	100m/s² (10G), 3 times in each direction of X, Y and Z
Temperature characteristics		±2% Full Scale in a range between 0 - 50°C
Type of connection		R1/8", M5 female
Electrical cable		Oil resistant cable (internal 0.15mm²)
Weight		Approximately 60 gr. (with 2 metres of cable) and Approximately 40 gr. (with M8 4 pin male connector)

Output circuit wiring scheme

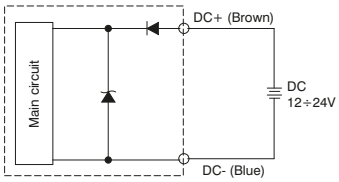

Accessories

Fastening bracket

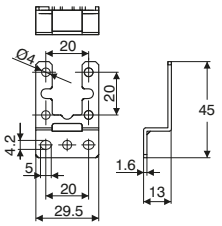

Ordering code
DS.BT5

Panel mount adapter

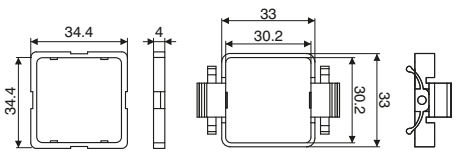

Ordering code
DS.PAC

Fastening bracket

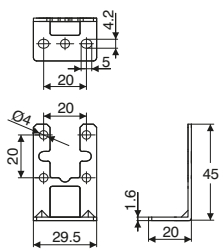

Ordering code
DS.BT6

Panel mount adapter with screen protection

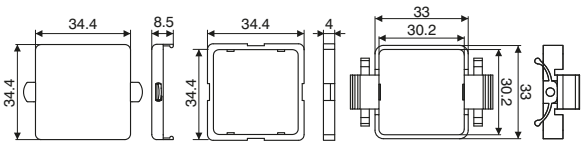

Ordering code
DS.PAD

Series 1700 - Pressure booster

General

It is not unusual that, during some applications the thrust generated by a pneumatic cylinder is not sufficient for the specific purpose it has been designed for.
In order to get over the problem, the working pressure may be increased to a maximum line pressure which normally is 6 - 7 bar; alternatively the problem is solved by an higher bore cylinder that suits the machine.
Three size pressure boosters, with pressure ratio of 2 - 1, have been designed to avoid these problems. This device is utilizing the compressed air of the circuit where it is installed.

Construction and working characteristics

The working method is based on the pump effect of the four chambers cylinder as shown in fig. 1. Two chambers are alternatively compressing the air in the boost one, while the fourth one is discharging.
By means of an internal circuit, the pressure booster keeps on pumping air till the down stream pressure reaches a value double the inlet pressure.
In these circumstances there is a balance condition.
When the down stream pressure decreases, the pressure booster starts again its alternating cycle till a new balance condition is restored.
The pressure booster can be furnished complete with pressure regulator installed on the inlet port for getting an accurate outlet pressure value. A wall mounting plate is also available.

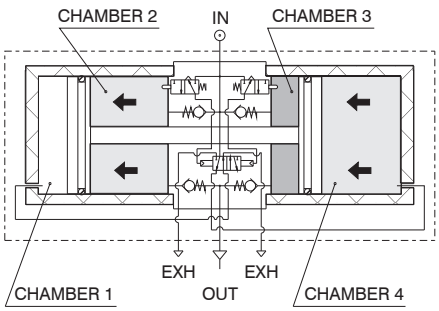

Instructions for installation and use

It is advisable to install a small air tank after the pressure booster to avoid pressure pulsation effects.
Discharge the down stream circuit before any maintenance operation as the inner circuit of the booster does not allow the down stream line discharge even if the inlet pressure drops down.

Maintenance

Pressure booster has an average life of about 20 millions of valve cycles, depending on working conditions (every back stroke corresponds to one valve cycles). A proper lubrication and filtration of air improve the life of pressure booster parts.
It is advisable to protect the exhaust ports in environment.
Replaceable spare seal kits are available.

How to calculate the required time of pressure booster to increase the air pressure in a tank whose capacity is known.

Operating Data:
P1 = Inlet pressure
P2' = Tank initial pressure
P2" = Tank final pressure
V = Tank volume

PROCEDURE :
1) Calculate the ratio K' between the initial pressure of the tank and the inlet pressure of the booster (P2' / P1).
2) Calculate the ratio K" between the final pressure of the tank and the inlet pressure of the booster (P2" / P1).
3) Locate the intersection point between the ratio K' and the curve on filling time diagram related to the specific booster.
Trace a vertical line from the above point and read the correspondent time T' (the example shows the ratio K = 0.8 and correspondent time of about 4.8 seconds).

4) Repeat same procedure also for ratio K" to get time T".

5) Use the following formula T = (T"-T')

to obtain the total time required to move the pressure P2' to P2" of tank volume V.

Filing characteristics (5 liters tank)

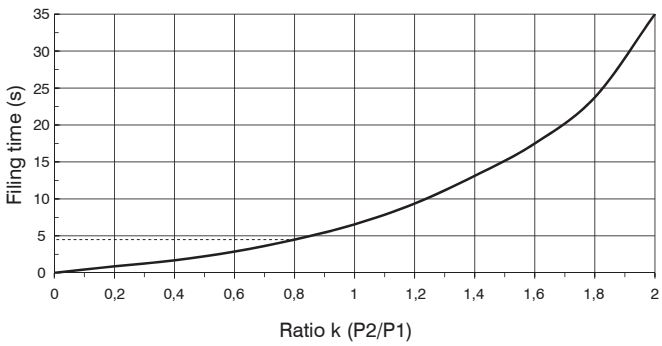

P1 = inlet pressure
P2 = tank pressure

Overall dimensions and technical information are provided solely for informative purposes and may be modified without notice

Pressure booster ø40

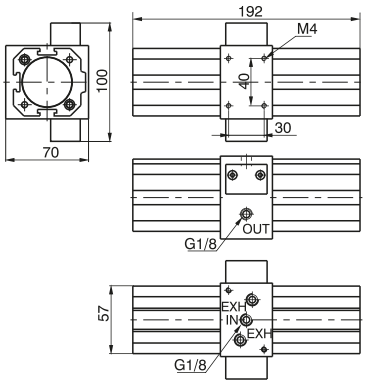

Ordering code
1740.50N

Flow rate curves

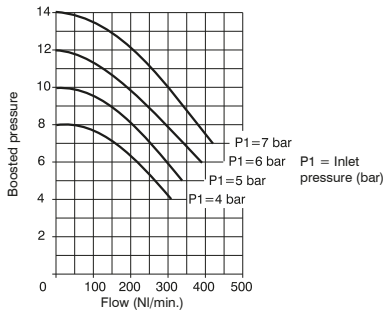

Filling curves

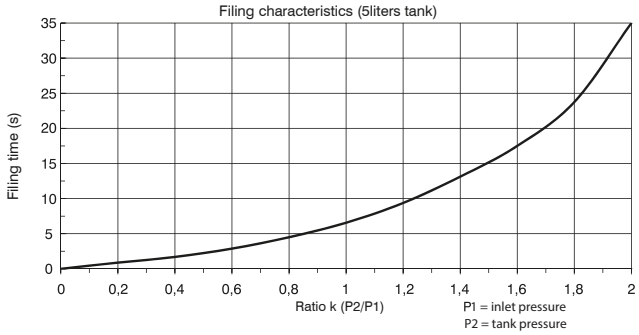

Operating Characteristics

- Self operating pressure booster with pressure ratio of 2:1.
- Automatic functioning: to operate the booster just connect it to compressed air line.
- Body made with light alloy.
- Barrel made of extruded and anodized aluminium.
- Downstream circuit pressure is kept under pressure even in absence of inlet pressure.

Technical characteristics

Connections	G 1/8"
Max working pressure (bar)	2 - 8
Temperature °C	-5 - +50
Nominal orifice diamete (mm)	ø5
Weight (g)	1500
Assembly position	Any
Max. fittings torque (Nm)	15

Pressure booster ø40 with pressure regulator

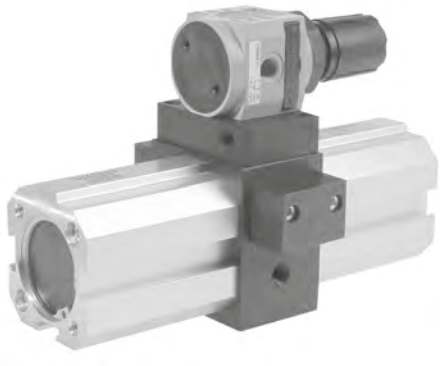

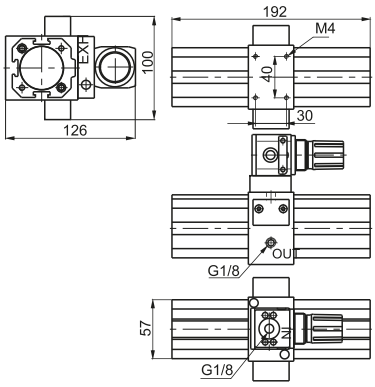

Ordering code
1740.50.NR

Flow rate curves

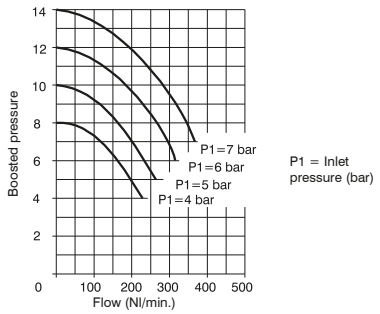

Filling curves

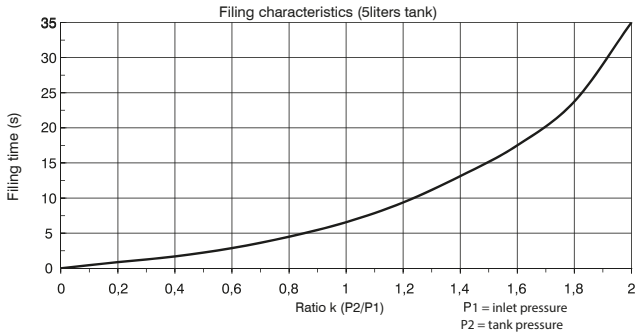

Operating Characteristics

- Self operating pressure booster with pressure ratio of 2:1.
- Automatic functioning: to operate the booster just connect it to compressed air line.
- Body made with light alloy.
- Barrel made of extruded and anodized aluminium.
- Downstream circuit pressure is kept under pressure even in absence of inlet pressure.
- Regulation of the inlet pressure (and as a consequence regulation of the outlet pressure)

Technical characteristics

Connections	G 1/8"
Max working pressure (bar)	2 - 8
Temperature °C	-5 - +50
Nominal orifice diamete (mm)	ø5
Weight (g)	1600
Assembly position	Any
Max. fittings torque (Nm)	15

Pressure booster ø63

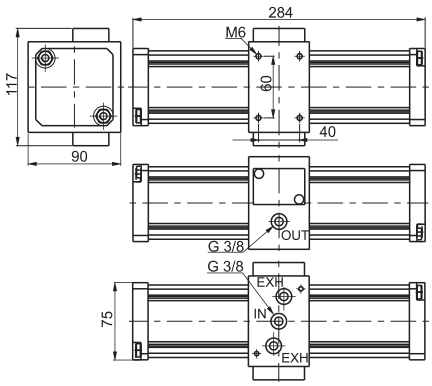

Ordering code
1763.80N

Flow rate curves

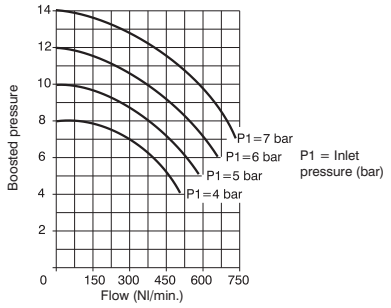

Filling curves

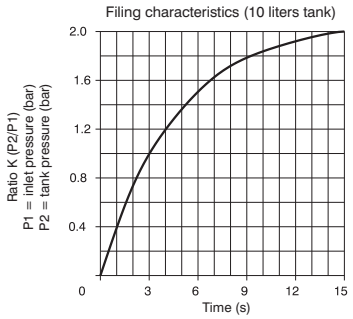

Operating Characteristics

- Self operating pressure booster with pressure ratio of 2:1.
- Automatic functioning: to operate the booster just connect it to compressed air line.
- Body made with light alloy.
- Barrel made of extruded and anodized aluminium.
- Downstream circuit pressure is kept under pressure even in absence of inlet pressure.

Technical characteristics

Connections	G3/8"
Max working pressure (bar)	2 - 8
Temperature °C	-5 - +50
Nominal orifice diamete (mm)	7
Weight (g)	3000
Assembly position	Any
Max. fittings torque (Nm)	15

Pressure booster ø63 complete with pressure regulator

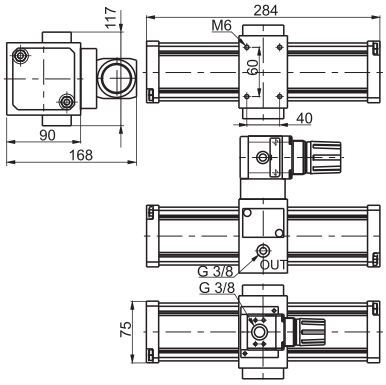

Ordering code
1763.80.NR

Flow rate curves

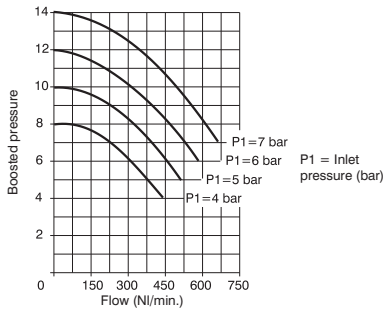

Filling curves

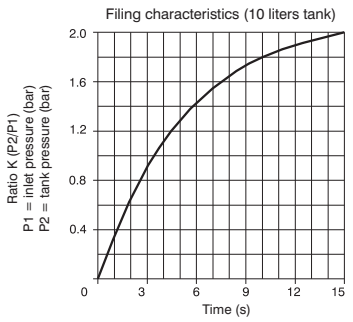

Operating Characteristics

- Self operating pressure booster with pressure ratio of 2:1.
- Automatic functioning: to operate the booster just connect it to compressed air line.
- Body made with light alloy.
- Barrel made of extruded and anodized aluminium.
- Downstream circuit pressure is kept under pressure even in absence of inlet pressure.
- Regulation of the inlet pressure (and as a consequence regulation of the outlet pressure)

Technical characteristics

Connections	G 1/8"
Max working pressure (bar)	2 - 8
Temperature °C	-5 - +50
Nominal orifice diamete (mm)	7
Weight (g)	3200
Assembly position	Any
Max. fittings torque (Nm)	15

Overall dimensions and technical information are provided solely for informative purposes and may be modified without notice

Pressure booster ø100

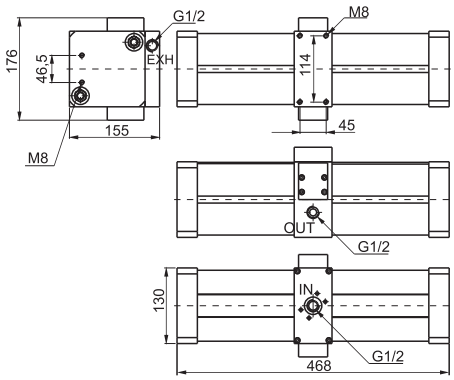

Ordering code
17100.125N

Flow rate curves

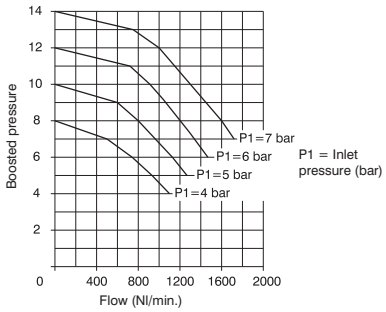

Filling curves

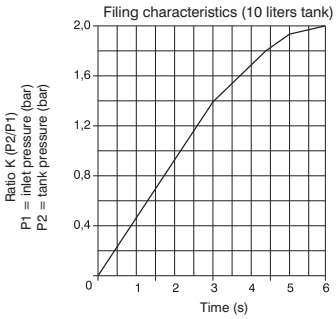

Operating Characteristics

- Self operating pressure booster with pressure ratio of 2:1.
- Automatic functioning: to operate the booster just connect it to compressed air line.
- Body made with light alloy.
- Barrel made of extruded and anodized aluminium.
- Downstream circuit pressure is kept under pressure even in absence of inlet pressure.

Technical characteristics

Connections	G1/2"
Max working pressure (bar)	2 - 8
Temperature °C	-5 - +50
Nominal orifice diamete (mm)	12
Weight (g)	12000
Assembly position	Any
Max. fittings torque (Nm)	40

Pressure booster ø100 complete with pressure regulator

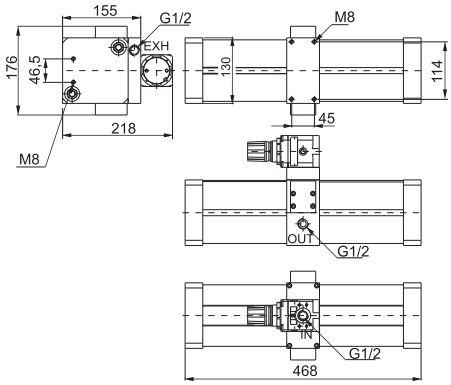

Ordering code
17100.125NR

Flow rate curves

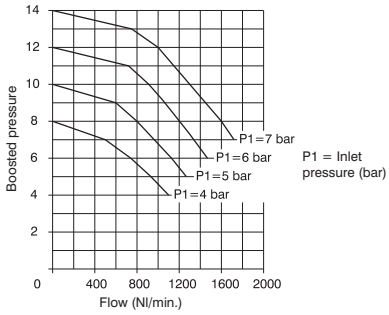

Filling curves

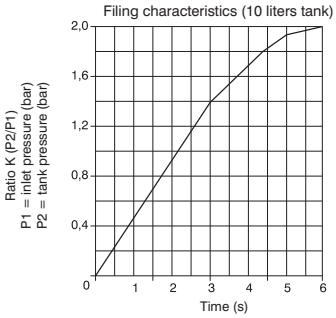

Operating Characteristics

- Self operating pressure booster with pressure ratio of 2:1.
- Automatic functioning: to operate the booster just connect it to compressed air line.
- Body made with light alloy.
- Barrel made of extruded and anodized aluminium.
- Downstream circuit pressure is kept under pressure even in absence of inlet pressure.
- Regulation of the inlet pressure (and as a consequence regulation of the outlet pressure)

Technical characteristics

Connections	G 1/2"
Max working pressure (bar)	2 - 8
Temperature °C	-5 - +50
Nominal orifice diamete (mm)	12
Weight (g)	12600
Assembly position	Any
Max. fittings torque (Nm)	40

Overall dimensions and technical information are provided solely for informative purposes and may be modified without notice

Base complete with pressure reducer

Ordering code
17Ⓥ.BR
VERSION
40 = Base complete with pressure reducer for Ø40 booster
Ⓥ 63 = Base complete with pressure reducer for Ø63 booster
ø100 = Mount directly the pressure reducer Code 17302B.C

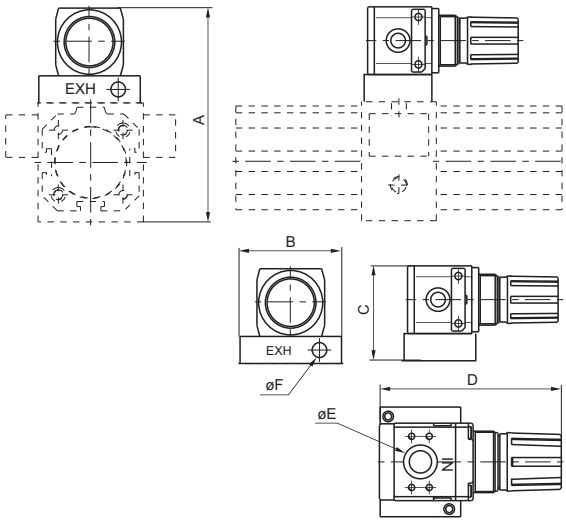

DIMENSIONS						
CODE	A	B	C	D	E	F
1740.BR	126	60	56	91	G1/8”	G1/8”
1763.BR	168	75	78	124	G3/8”	G3/8”

Booster mounting plate

Ordering code
17Ⓥ.02
VERSION
40 = Mounting plate for Ø40 booster
Ⓥ 63 = Mounting plate for Ø63 booster
ø100 = Use short foot bracket code 1320.50.05/1F

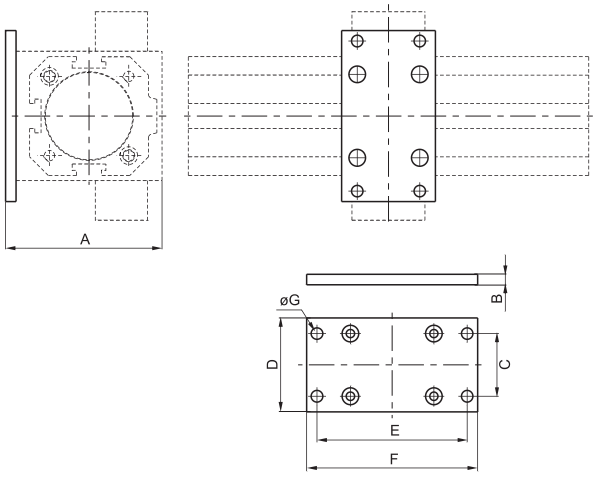

DIMENSIONS							
CODE	A	B	C	D	E	F	ØG
1740.02	75	5	30	45	72	82	5,5
1763.02	100	15	53	70	98”	110	M8

Overall dimensions and technical information are provided solely for informative purposes and may be modified without notice

Series P+

Basic Information

In some cases the force generated by a pneumatic actuator is not sufficient to carry out its required function. To overcome this problem it is then necessary, where possible, to either increase the working pressure or use a larger bore actuator providing it will fit within the structure of the machine.
If you cannot fit a larger actuator, the solution is to use a pressure booster to increase the air pressure to that portion of the pneumatic circuit. The booster operates using the same compressed air used by the pneumatic system and does not require an external power supply. It is easy to install and can increase the working pressure in any part of the system where ever its needed, maintaining the normal working pressure in the rest of the system.
The new pressure booster **P+** is lightweight with a new compact and linear design, **P+** has an integrated pressure regulator that adjusts the setting of the output pressure P2 which is also fitted with a pressure relief valve. The design of the internal circuit provides high flow rates and fast filling times whilst the two G1/8" manometer connections built into the body of the booster allow monitoring of the input and output pressures.

Operation

The operating principle of the device is based on a four chamber pump in which with a reciprocating movement, two chambers compress the air in the compression chamber whilst the fourth chamber is in the discharge phase. The incoming air passes through the non-return valves and supplies the compression chambers "A" and "B" at the same time.
Meanwhile, the integrated pressure regulator feeds the thrust chamber "C" via the oscillating valve which in turn compresses the air in compression chamber "B", the air is then pushed through the non-return valve and exits through the outlet connection.
When the piston reaches the end of stroke the oscillating valve changes over and feeds chamber "D" putting chamber "C" into the discharge position, thus reversing the piston and compressing the air in compression chamber "A", pushing it through the non-return valve and out through the outlet connection.
The oscillating motion of the piston allows the pressure booster to pump intensified air into the downstream circuit until the chambers reach a state of equilibrium; this in turn stops the booster.
When the downstream pressure decays the booster restarts oscillating until the state of equilibrium is re-established.

Pneumatic Circuit

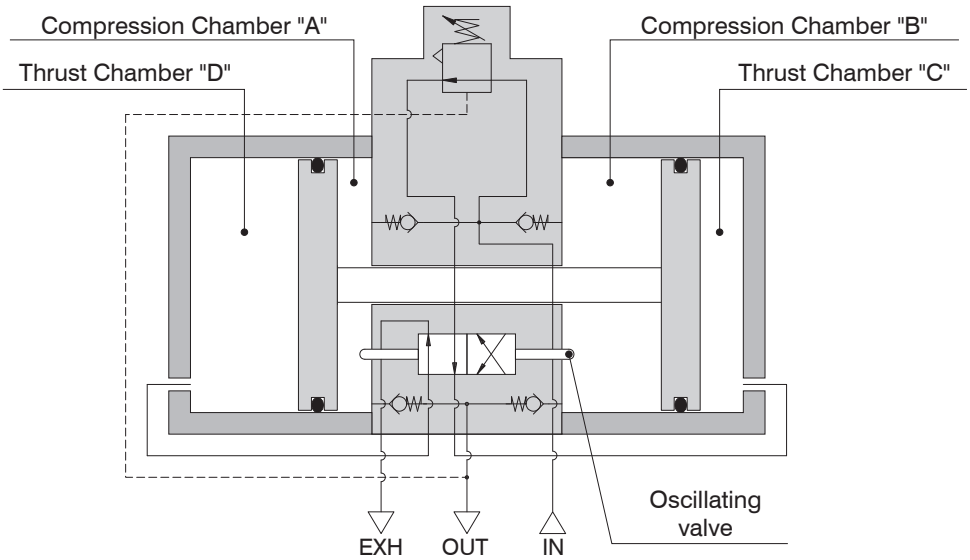

The **P+** pressure booster, is certified by ATEX:

CE Ex II 3GD c T6 T85°C X 5°C≤Ta≤50°C.

General Warning

It is recommended you follow the instructions below in order to prevent personal injury or damage to the booster.

- The pressure booster is supplied as standard with the regulating spring completely unwand. in this condition it is possible to detect a leak of air from below the regulating knob or through the exhaust port. this conditions is standard for the unit. When the spring is completely unwand the downstream pressure and the inlet pressure are the same. in order to increase the downstream pressure it is necessary to operate th regulation knob increasing the sping compression.
- Please apply the necessary safety measures to ensure that the booster only operates within the specified pressure range. Exceeding the maximum output pressure is dangerous.
- The Booster is fitted with a non-return valve on the output which prevents discharge of the downstream pressure, It is recommended that a 3/2 valve be installed in the OUT connection if it is necessary to rapidly discharge the downstream pressure.
- When the booster is not in use it is recommended that the inlet pressure is removed to let the booster stop, thus avoiding unexpected operation or malfunction.
- If there is not downstream air consumption it is possible to register a leak through the exhaust port of the unit. this condition is normal and is the conseguence of the internal designed aimed at discharging any pressure building up in the unit in the rest condition.

Use and maintenance

The pressure booster must always be used in accordance with the operating parameters and instruction; any improper use may cause injury or malfunction. The pressure booster is not an alternative to a compressor because continuous uninterrupted operation will greatly reduce the life of the unit.

- The operating life of the device depends mainly on the operational duty cycle. Prolonged uninterrupted use without pause may reduce the operating life of the booster.
- Ensure the unit is supplied with a suitable compressed air supply, please note: appropriate filtration and lubrication may help to increase the durability of the product.
- **The input flow value must be equal or greater than double the output flow value (Q1/Q2>2).**
- **Ensure that the value of the output pressure is at least 1bar higher than the input pressure (P2>P1+1).**
- To avoid pulsation of the output pressure during operation, it is recommended that an accumulation tank (reservoir) is installed in the downstream circuit.
- Protect the booster exhaust ports from the ingress of dust or debris.
- To reduce the noise generated by the unit, install silencers into the exhaust ports.
- Pressure booster has an average life of about 20 millions of valve cycles, depending on working conditions (every back stroke corresponds to one valve cycles).

Regolazione della pressione

The booster is fitted with an internal pressure regulator which allows regulation of the output pressure P2 and is also fitted with pressure relief valve. For correct operation of the booster, please consider the following instructions:

- Air leaking from under the adjusting knob when the spring is decompressed is not a defect but a sign that the device is working correctly.
- In order to increase the regulated pressure, pull the knob upwards to unlock, then rotate the knob in the direction indicated by the arrow (+).
- To lock the knob after the adjustment has been made, push the knob downwards until it detents in the locked position.
- To reduce the output pressure, pull the knob upwards, rotate the knob indicated by the arrow (-), the built in pressure relief valve will discharge the excess pressure from under the adjusting knob.
- Always regulate the rising pressure.

Overall dimensions and technical information are provided solely for informative purposes and may be modified without notice

Method of calculation of the time necessary to increase the pressure in a tank of a given volume using a pressure booster.

DATA:
P1 = Inlet pressure
P2' = Initial tank pressure
P2" = Final tank pressure
V = Tank volume

PROCEDURE:

1) Calculate the K' ratio between the initial tank pressure and the inlet booster pressure (P2'/ P1).
2) Calculate the K" ratio between the final tank pressure and the inlet booster pressure (P2"/ P1).
3) Locate, on the chart illustrating, the booster filling time, the intersection point between the K' ratio and the curve, then trace a vertical line from the intersection point to the vertical axis and read the correspondent value T' (in the example chart, to a ratio of 0.8 corresponds a time value of about 3.6 seconds).
4) Repeat the operation for the K'' ratio, obtaining the T" time.
5) Apply the formula $T = \frac{V}{5} \cdot (T'' - T')$

to obtain the total time needed to take the tank of volume V from the pressure value P2' to the pressure value P2'.

Example of calculation of the necessary time to take a 10L tank from the pressure value P2' to the value P2"

K' = 0,8 T' = 3,6 sec. V = 5L.
K" = 1,5 T" = 12 sec.

$T = \frac{5}{5} \cdot (12-3,6) = 8,4$ sec.

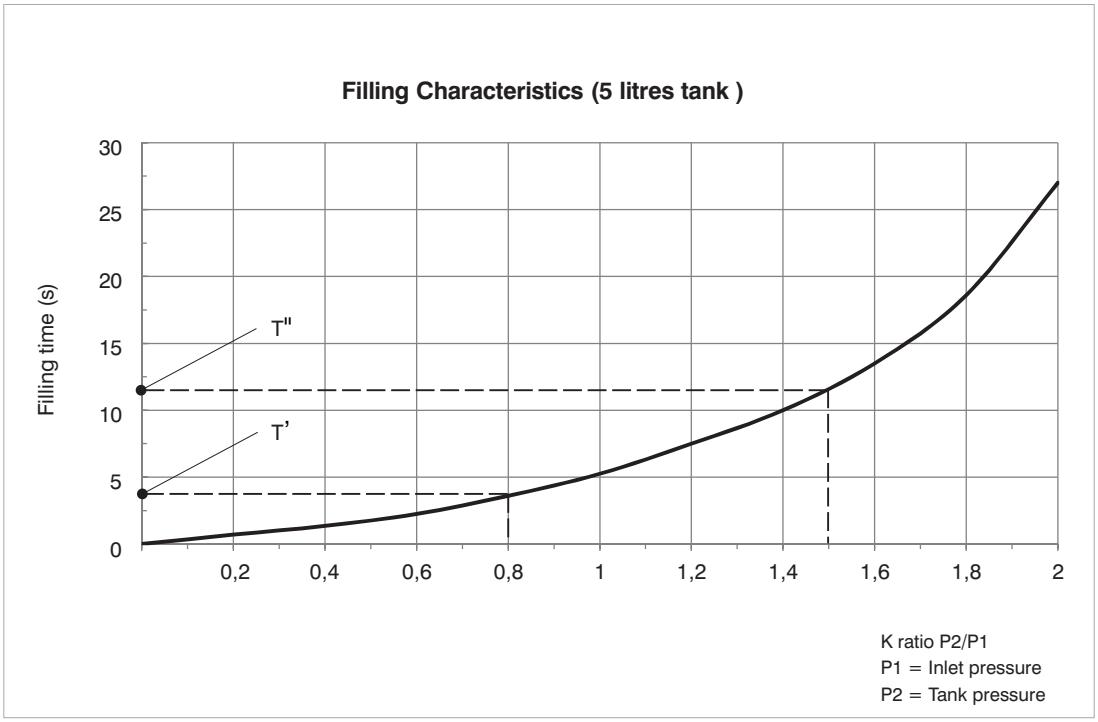

Pressure booster in Technopolymer Ø40

ATEX CE II 3GD

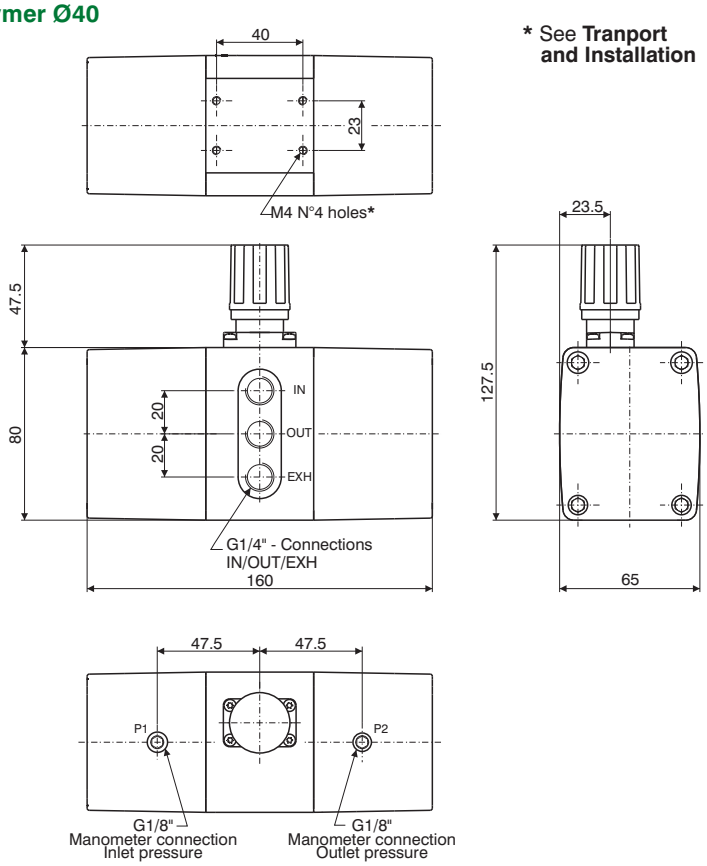

* See **Tranport and Installation**

Ordering code	
MDPT40.2R.◉	
◉	MANOMETER OPTIONS
	Without options = Standard without manometer
	A = Manometer P1 0-12 bar Manometer P2 0-20 bar
	B = Manometer P1 0-12 bar Manometer P2 0-16 bar
	C = Manometer P1 0-12 bar Manometer P2 0-12 bar

Operational characteristics

- Pressure Booster with max. 2:1 Compression ratio
- Automatic operation for use with compressed air only
- Maintains downstream air when the supply pressure fails (Providing the circuit has no leakage)
- Integrated regulator for output pressure control, with overpressure relief valve
- IN,OUT and EXH connections – G1/4" on the same side
- Manometer connections G1/8" to monitor and control the input and output pressures
- Body and cover in technopolymer
- Connections in technopolymer

Technical characteristics

Connections (IN / OUT / EXT)	G1/4"
Manometer connections P1/P2	G1/8"
Working pressure (bar) [Min. - Max.]	2,5 ÷ 10
Working temperature (°C) [Min. - Max.]	-5 ÷ + 50
Moltiplication ratio max.	2 : 1
Assembly position	Any
Pressure regulation	Manual with relieving
Weight	905 gr.
Max. fittings torque	G1/8 = 4 N/m G1/4 = 9 N/m

Characteristics curves

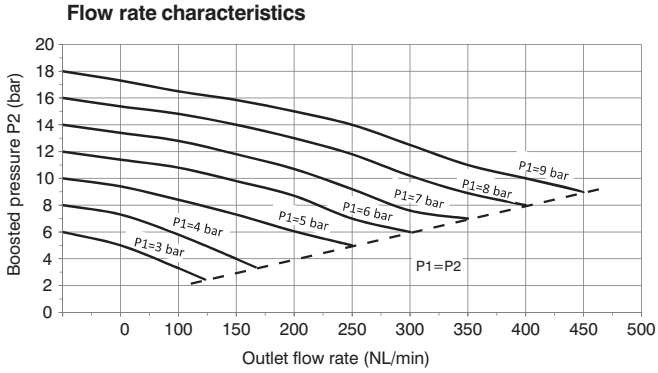

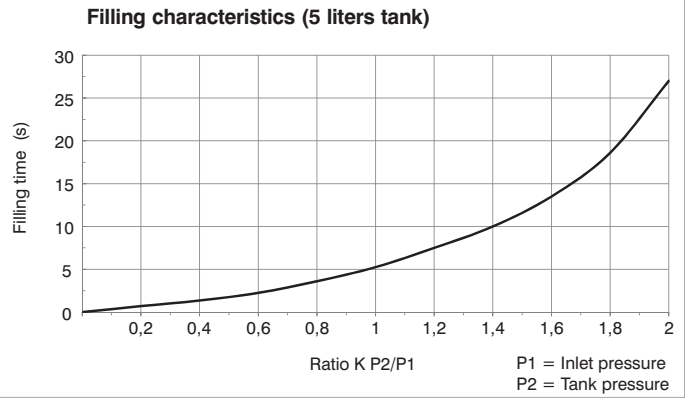

Overall dimensions and technical information are provided solely for informative purposes and may be modified without notice

Transport and Installation:

The installation and implementation of the device must be done by skilled personnel. Respecting the safety requirements specified in the UNI norm **UNI EN 983-97 Machinery Safety – Safety Requirements concerning oleo-hydraulic and pneumatic systems** and their components.

The following instructions are essential for a correct installation:

- Do not use the green knob to lift and transport the device, because it could rip off causing injuries or damaging objects..
- Install the booster by fixing it through the threaded M4 holes on the body of the machine or using the special accessories (see the "Accessories" chapter).

Direct Wall Fixing

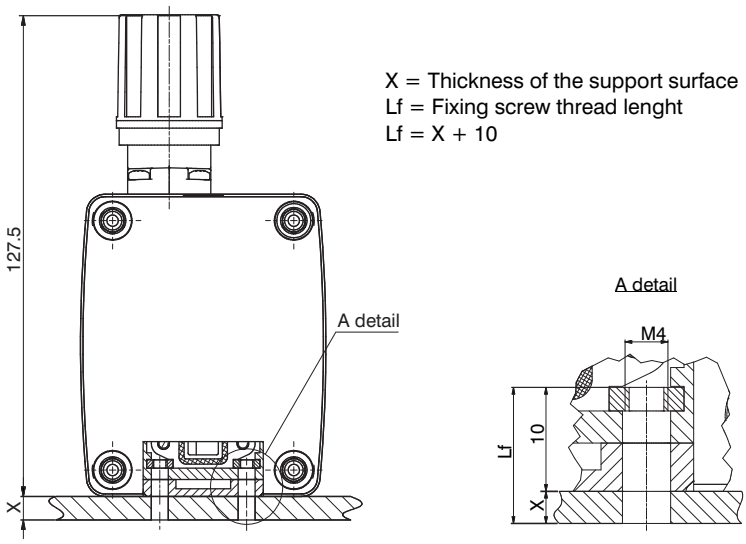

Fixing with a steel plate fixing clamp.

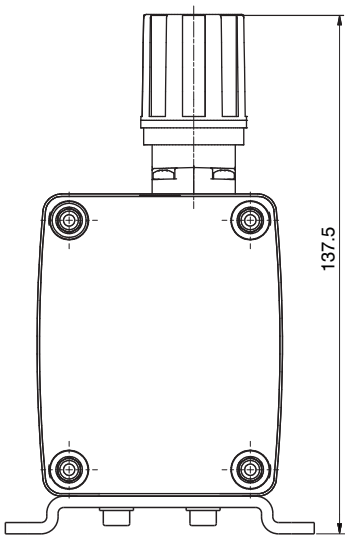

Bracket

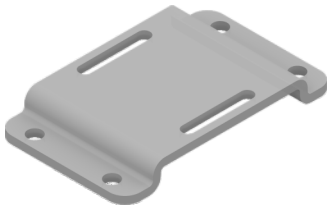

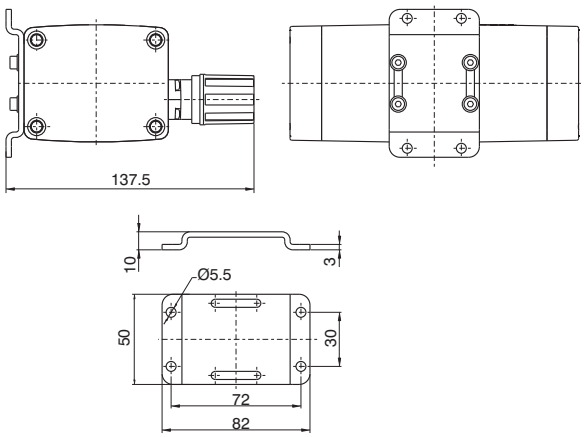

Ordering code
T1740.01

Weight gr. 94,5
Complete with booster fixing screws

Manometer D.40

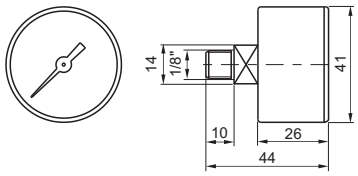

Ordering code	
17070A.Ⓢ	
Ⓢ	SCALE
	A = 0-4 bar
	B = 0-6 bar
	C = 0-12 bar
	D = 0-16 bar
	E = 0-20 bar

Weight gr. 85

Section 03

Pneumatic actuation

Pneumatic cylinders, handling and magnetic sensors

Cylinders with piston rod according to standard

ISO 6432 Microbore cylinders

Versions available: with threaded end caps, rolled end caps, aluminium, stainless steel and technopolymer versions

Series 1200 Threaded end caps cylinders 3.1

Series 1200 Rolled end caps (MIR) 3.4

Series 1200 Rolled end caps (MIR-INOX) 3.8

Series 1200 TECNO-MIR 3.10

Series 1200 Steel line 3.12

CNOMO-CETOP-ISO cylinders

Cylinders manufactured according to standards CNOMO, CETOP and ISO: standard versions, through rod versions, tandem push with common rod, tandem push with independent rods or opposed tandem with common rod

Series 1303-1304-1305-1306-1307 3.30

ISO 15552 cylinders

Cylinders according to ISO 15552 with bores from Ø32 to Ø200 mm and strokes up to 1250 mm.
Available versions: ECOPLUS with aluminium or technopolymer end plates, ECOLIGHT optmized in weight and dimensions, Steel line completely in stainless steel, round tube versions tie rod (Ø250-Ø320 mm)

Series 1319-1320-1321 3.40

Series 1348-1349-1350 3.43

Series Ecoplus 3.46

Series Ecolight 3.50

Series 1315 Round tube 3.68

Series Steel line 3.71

ISO 15552 Hydro-pneumatic speed control cylinders

ISO 15552 Hydro-pneumatic speed control cylinders with internal hydraulic circuit for movement control

Series 1450-1463 3.81

Overall dimensions and technical information are provided solely for informative purposes and may be modified without notice

ISO 21287 Compact cylinders

Compact cylinders according to standard ISO with integrated slots suitable for sensors mounting without adaptors. Bores from Ø20 to Ø100 mm. Versions with end stroke adjustable pneumatic cushioning are also available according to ISO 21287

Series Ecompact **3**.87

Cylinders with piston rod not according to standard

Threaded body microbore cylinders

Special performance microbore cylinders with hexagonal or round bodied and either fully threaded or threaded with a plain rod ending

Series 1200
Special performance (1213-1273) **3**.103

Non rotating cylinders

Non rotating cylinders twin rod version, available with bores from Ø32 to Ø100 mm, and strokes up to 500 mm

Series 1325-1326-1345-1347 **3**.105

Flat cylinders

ECOFLAT cylinders available with sizes from Ø25 to Ø63 mm and strokes up to 300 mm. Profiled tube has two “T” slots on the side hosting sensors 1580._, MRS._, MHS._. without adaptors. Two additional connections are also available on rear cover for cylinder feeding

Series ECOFLAT **3**.108

Hydraulic speed control cylinders

Hydraulic speed control cylinders with outward, inward and outward/inward control, with lateral or in-line tank. Available with SKIP valve (accelerating device) and blocking valve (STOP).

Series 1400 **3**.115

Short stroke & compact cylinders

Short stroke & compact cylinders with bores from Ø20 to Ø100 mm, available in single and double acting versions, tandem and through rod with magnetic piston versions. The Europe versions are mainly compliant with the ISO or UNITOP standard (relating to holes), while the Ecompact-S versions are based on connecting rods and centering diameters according to the ISO 15552 standard

Series 1500 **3**.127

Series Europe **3**.136

Series Ecompact-S **3**.144

Cylinders with Piston rod not according to standard (following)

Multimount cylinders

Multimount cylinders available with bores from Ø10 to Ø25 mm, with strokes up to 50 mm and with magnetic piston versions

Series 6500 **3**.149

Guided compact cylinders

These cylinders are available in sizes Ø32 to Ø63 mm, and comprise a single compact cylinder with integral guide rods, The rod guide is available in two styles: self-lubricating bronze bushes and bearing bushes

Series 6100-6101-6110 **3**.152

Slide cylinders

Slide cylinders manufactured with bores from Ø8 to Ø25 mm, with strokes up to 150 mm. Available with simple and double regulation end stroke and also with front and rear shock absorber

Series 6600 **3**.168

Slide units

Twin-rod linear guide units with bores from Ø10 to Ø32 mm, and with control unit with bronze bush versions, with control unit with bearing bush versions. Are also available the through twin-rod slide units and the compact slide units

Series 6200 **3**.178

Series 6210 **3**.184

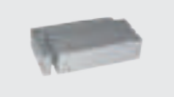
Series 6700 **3**.189

Rodless cylinders

Mechanically coupled

Mechanically coupled cylinders with bore from Ø16 to Ø63 mm, and strokes up to 6000 mm, available also with linear control unit

Series 1605 **3**.196

Series 1600 Ø16 **3**.207

Cable driven

Cable driven cylinders work in a linear translation systems

Series 1601 **3**.212

Overall dimensions and technical information are provided solely for informative purposes and may be modified without notice

Rotary actuators

Rack & pinion rotary actuators

Double or single rack & pinion rotary actuators

Series 1330 **3**.213

Series 6400 **3**.217

Series 6411 **3**.221

Vane type rotary actuators

Vane type rotary actuator with the shaft that runs into ball bearings, available with sizes from Ø10 to Ø100 mm

Series 6420 **3**.225

Handling

Pneumatic grippers

Pneumatic grippers manufactured with 2 angular fingers (from -10° to +30°), wide opening 180° or 3 finger parallel style

Series 6301 **3**.236

Series 6302 **3**.239

Series 6303 **3**.242

Series 6310 **3**.245

Series 6311 **3**.248

Series 6312 **3**.251

Magnetic sensors

Standard series

Magnetic sensors with Reed type or Hall effect

Series SA **3**.254

Miniaturized series

Miniaturized series with Reed and Hall style versions, available with rectangular, square, square section CURS approved, and round section versions

Series SR **3**.263

Series SU CURS **3**.264

Series SQ **3**.265

Series ST **3**.266

Accessories and fixing devices

Piston rod lock

Piston rod lock for cylinders with bores from da Ø12 to Ø125 mm

Series 1260 - 1320 **3**.269

Linear guides

Linear control units Series 1200 (Ø20-25 mm) and Series 1320 (from Ø32 to Ø80 mm)

Series 1260 - 1320 **3**.271

Shock absorbers

Shock absorbers with M8x1 - M10x1 - M14x1,5 - M20x1,5 - M27x1,5 threads

Series 6900 **3**.273

Overall dimensions and technical information are provided solely for informative purposes and may be modified without notice

Series 1200, Threaded end caps

Construction characteristics

End caps	hard anodised aluminum
Barrel	anodised aluminium (brass for Ø8 and Ø10)
Piston rod	non magnetic piston : Ø8 - Ø10: stainless steel / Ø12 - Ø50: C43 chromed magnetic piston: Ø10 - 20: stainless steel / Ø25 - 50: C43 chromed
Piston	aluminium
Seals	Standard: NBR Oil resistant rubber, PUR Piston rod seals (HNBR or FPM seals available upon request)
Mounting	steel painted in cataphoresis
Forks	cadmium plated steel
Single-acting springs	steel for springs and stainless steel
Cushioning length	ø 16 - 20 - 25 - 32 - 40 - 50 mm 15 - 18 - 18 - 18 - 22 - 22

Technical characteristics

Fluid	Filtered air. No lubrication needed, if applied it shall be continuous.
Max. pressure	10 bar
Working temperature	-5°C - +70°C with standard seals magnetic or non magnetic piston -5°C - +80°C with FPM seals magnetic piston -5°C - +80°C with HNBR seals magnetic piston -5°C - +120°C with HNBR seals non magnetic piston -5°C - +150°C with FPM seals non magnetic piston

Please follow the suggestions below to ensure a long life for these cylinders:
- use clean and lubricated air
- correct alignment during assembly with regard to the applied load so as to avoid radial components or bending the rod.
- avoid high speeds together with long strokes and heavy loads: this would produce kinetic energy which the cylinder cannot absorb, especially if used as a limit stop (in this case use mechanical stop device)
- evaluate the environmental characteristics of cylinder used (high temperature, hard atmosphere, dust, humidity etc.)

Please note: air must be dried for applications with lower temperature.
Use hydraulic oils H class (ISO VG32) for correct continued lubrication.
Our Technical Department will be glad to help.

Standard strokes
Double acting version
Ø8 - Ø10 : 15 - 25 - 50 - 75 - 80 - 100 mm
Ø12 - Ø16 : 15 - 25 - 50 - 75 - 80 - 100 - 150 - 160 - 200 - 250 - 300 mm
Ø20 - Ø25 : 15 - 25 - 50 - 75 - 80 - 100 - 150 - 160 - 200 - 250 - 300 - 320 - 350 - 400 mm
Ø32 - Ø50 : 15 - 25 - 50 - 75 - 80 - 100 - 150 - 160 - 200 - 250 - 300 - 320 - 350 - 400 - 450 - 500 mm
On request are available strokes up to:
Ø8 - Ø10 : 250 mm
Ø12 - Ø16 : 700 mm
Ø20 - Ø50 : 1000 mm

Single acting version
Ø12 - Ø50 : up to stroke 40 mm
On request are available strokes up to 200 mm

Minimum and maximum springs load for single acting version

Bore	Ø12 - Ø20	Ø25	Ø32	Ø40 - Ø50
Min. load (N)	10	10	20	40
Max. load (N)	25	50	55	110

Basic version

Ordering code	Description
1260.Ø.stroke	Basic version
1271.Ø.stroke	Basic version front spring from Ø12 (max stroke 40 mm)
1272.Ø.stroke	Basic version rear spring from Ø12 (max stroke 40 mm)
12– –.Ø.stroke.A	Adjustable cushioning (from Ø16)
12– –.Ø.stroke.M	Magnetic piston (from Ø10)
12– –.Ø.stroke.X	Stainless steel rod
12– –.Ø.stroke.M.A	Cushioning with magnetic piston
12– –.Ø.stroke.M.A.X	Cushioning, magnetic piston and stainless steel piston rod
12– –.Ø.stroke. . . .T	HNBR seals version
12– –.Ø.stroke. . . .V	FPM seals version

Standard execution, fully complying with ISO standards from ø 8 to ø 25. BOREs 32, 40 and 50 not included in the standard, comply with our own specifications. Can use all available mountings. For single acting type, the maximum stroke is 40 mm., after which overall dimensions increase in length to an extent not proportional to the stroke (and in any case not longer than stroke 100).

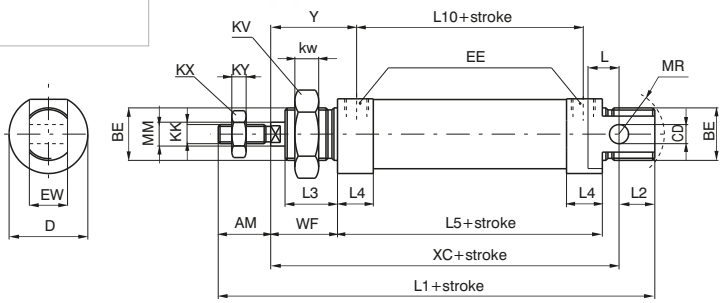

Without rear eye version

Ordering code	Description
1261.Ø.stroke	Without rear eye
1273.Ø.stroke	Without rear eye front spring from Ø12 (max stroke 40 mm)
1274.Ø.stroke	Without rear eye rear spring from Ø12 (max stroke 40 mm)
12– –.Ø.stroke.A	Adjustable cushioning (from Ø16)
12– –.Ø.stroke.M	Magnetic piston (from Ø10)
12– –.Ø.stroke.X	Stainless steel rod
12– –.Ø.stroke.M.A	Cushioning with magnetic piston
12– –.Ø.stroke.M.A.X	Cushioning, magnetic piston and stainless steel piston rod
12– –.Ø.stroke. . . .T	HNBR seals version
12– –.Ø.stroke. . . .V	FPM seals
12– –.Ø.stroke. . . .L	Air inlet at 90° version

Version derived from standard execution 1260 and not included in ISO standard. Not having a rear eye it is shorter and the air inlet is from the rear or at 90° like it is on the front. The considerations made for the basic type 1260 apply for all single-acting types.

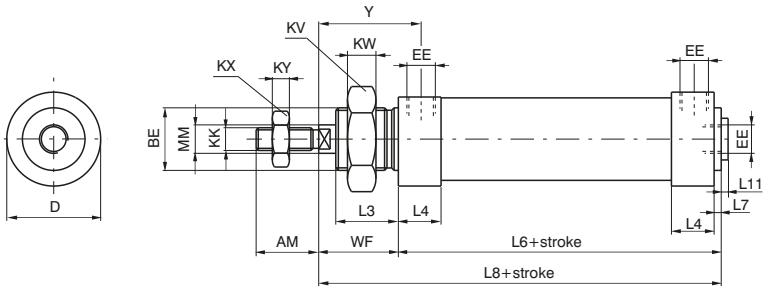

Through rod cylinder version

Ordering code	Description
1262.Ø.stroke	Through rod cylinder rod
1262.Ø.stroke.A	Adjustable cushioning (from Ø16)
1262.Ø.stroke.M	Magnetic piston (from Ø10)
1262.Ø.stroke.X	Stainless steel rod
1262.Ø.stroke.E	Hexagonal piston rod (from Ø12)
1262.Ø.stroke.M.A	Cushioning with magnetic piston
1262.Ø.stroke.M.A.X	Cushioning, magnetic piston and stainless steel piston rod
1262.Ø.stroke. . . .T	HNBR* seals version
1262.Ø.stroke. . . .V	FPM* seals version

★ Excludes hexagonal rod version

Execution by rod coming out from both end caps, with overall dimensions. except for the rod, equal to 1260 version. Not available with Ø8 and 10.

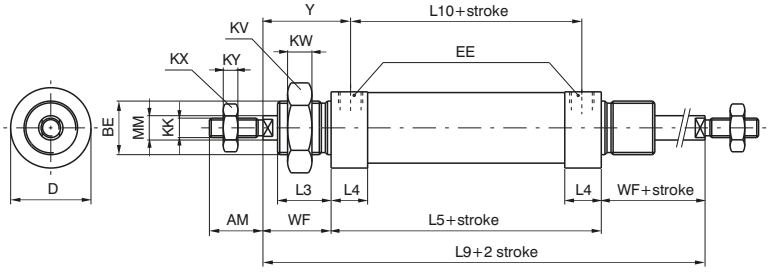

Overall dimensions and technical information are provided solely for informative purposes and may be modified without notice

Non rotating piston rod version

Ordering code	Description
1260.Ø.stroke.E	Hexagonal piston rod (from Ø12)
1271.Ø.stroke.E	Hexagonal piston rod with front spring from Ø12 (max stroke 40 mm.)
1272.Ø.stroke.E	Hexagonal piston rod with rear spring from Ø12 (max stroke 40 mm.)
12– –.Ø.stroke.M.E	Hexagonal piston rod with magnetic piston (from Ø12)

Similar overall dimensions as 1260 basic type, it differs because of the hexagonal rod (instead of circular) to avoid the rotation. It is particularly suitable when it is used as a guide and support to the linked element. Not for use with high frequencies and long strokes. For which, whenever possible use front spring.

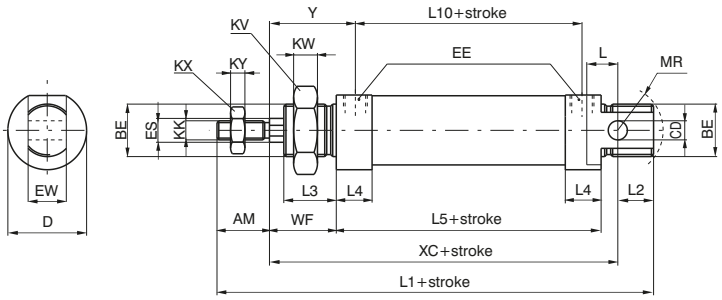

Table of dimensions

Bore		8	10	12	16	20	25	32	40	50
AM (-0,2)		12	12	16	16	20	22	20	25	25
BE		M12x1,25	M12x1,25	M16x1,5	M16x1,5	M22x1,5	M22x1,5	M30x1,5	M40x1,5	M40x1,5
CD (H9)		4	4	6	6	8	8	12	14	14
D (-0,3)		16	17	19	24	28	33	40	48	58
EE		M5	M5	M5	M5	G1/8"	G1/8"	G1/8"	G1/4"	G1/4"
ES		-	-	6	6	8	10	12	12	12
EW (d13)		8	8	12	12	16	16	26	30	30
KK (6g)		M4x0,7	M4x0,7	M6x1	M6x1	M8x1,25	M10x1,25	M10x1,25	M12x1,75	M12x1,75
KV		17	17	22	22	30	30	42	52	52
KW		5,5	5,5	6	6	7	7	8	9	9
KX		7	7	10	10	13	17	17	19	19
KY		3	3	4	4	5	6	6	7	7
L		6	6	9	9	12	13	13	16	16
L1(±1)	*	85	85	105	111	130	141	139	164	167
L2		9	9	14	13	15	15	14	16	16
L3		11	11	17	17	18	22	22	25	25
L4		10	10	9,5	10,5	15	15	15	18	18
L5 (±1)	*	46	46	50	56	68	69	69	79	82
L6 (±1)	*	48	48	52	58	70,5	71,5	71,5	82	85
L7		2	2	2	2	2,5	2,5	2,5	3	3
L8 (±1)	*	64	64	74	80	94,5	99,5	99,5	117	120
L9 (±1,2)	*	78	78	94	100	116	125	125	149	152
L10 (±1)	*	35	35	40	45	52	53	53	60	63
L11		-	-	-	1,5	2	2	2	2	2
MM (f7)		4	4	6	6	8	10	12	14	14
MR (min.)		12	12	16	16	18	19	22	28	28
WF (±1,2)		16	16	22	22	24	28	28	35	35
XC (±1)	*	64	64	75	82	95	104	105	123	126
Y (±1,2)		21,5	21,5	27	27,5	32	36	36	44,5	44,5
STROKE TOLERANCE: until stroke 100 mm - 1,5, beyond + 2 mm.										
Weight	stroke 0	55	60	80	100	175	240	365	610	790
g	every 10mm	6	7	5	5	8	11	15	19	21

Without rear eye version

Weight	stroke 0	50	55	75	95	170	230	345	570	750
g	every 10mm	6	7	5	5	8	11	15	19	21

Through rod cylinder version

Weight	stroke 0	55	60	95	120	220	310	450	760	950
g	every 10mm	7	8	7	7	12	17	24	31	33

Hexagonal rod version

Weight	stroke 0	-	-	85	105	180	250	370	590	760
g	every 10mm	-	-	5	6	8	12	16	17	19

(*) These dimensions increase of 10 mm for microbore cylinders equipped with magnetic piston and spring return, and of 9 mm for microbore cylinders with 10 mm BORE magnetic piston

Overall dimensions and technical information are provided solely for informative purposes and may be modified without notice

Series 1200, Rolled end covers “MIR”

Construction characteristics

End caps	hard anodised aluminium
Barrel	stainless steel AISI 304
Piston rod	stainless steel
Piston	brass (ø8-10-12) aluminium (ø16-20-25)
Seals	Standard: NBR Oil resistant rubber, PUR Piston rod seals (HNBR or FPM seals available upon request)
Mounting	steel painted in cataphoresis
Forks	zinc plated steel
Single-acting springs	C98 zinc plated steel for springs
Cushioning length	ø 16 - 20 - 25 - 32 mm 15 - 18 - 18 - 18

Operational characteristics

Fluid	Filtered air. No lubrication needed, if applied it shall be continuous.
Maximum working pressure	10 bar
Working temperature	-5°C - +70°C with standard seals magnetic or non magnetic piston -5°C - +80°C with FPM seals magnetic piston -5°C - +80°C with HNBR seals magnetic piston -5°C - +120°C with HNBR seals non magnetic piston -5°C - +150°C with FPM seals non magnetic piston

Please follow the suggestions below to ensure a long life for these cylinders:
- use clean and lubricated air
- correct alignment during assembly with regard to the applied load so as to avoid radial components or bending the rod.
- avoid high speeds together with long strokes and heavy loads: this would produce kinetic energy which the cylinder cannot absorb, especially if used as a limit stop (in this case use mechanical stop device)
- evaluate the environmental characteristics of cylinder used (high temperature, hard atmosphere, dust, humidity etc.)

Please note: air must be dried for applications with lower temperature.
Use hydraulic oils H class (ISO VG32) for correct continued lubrication.
Our Technical Department will be glad to help.

Standard strokes

Double acting version
Ø8 - Ø10 : 15 - 25 - 50 - 75 - 80 - 100 mm
Ø12 - Ø16 : 15 - 25 - 50 - 75 - 80 - 100 - 150 - 160 - 200 - 250 - 300 mm
Ø20 - Ø25 : 15 - 25 - 50 - 75 - 80 - 100 - 150 - 160 - 200 - 250 - 300 - 320 - 350 - 400 mm
Ø32 : 15 - 25 - 50 - 75 - 80 - 100 - 150 - 160 - 200 - 250 - 300 - 320 - 350 - 400 - 450 - 500 mm
On request are available strokes up to:
Ø8 - Ø10 : 250 mm
Ø12 - Ø16 : 700 mm
Ø20 - Ø32 : 1000 mm

Single acting version
Front spring **Ø8 - Ø32 :** up to stroke 50 mm
Rear spring **Ø16 - Ø32 :** up to stroke 50 mm

Minimum and maximum springs load for single acting version

Bore	Ø8	Ø10	Ø12	Ø16	Ø20	Ø25	Ø32
Min. load (N)	2.2	2.2	4	7.5	11	16.5	23
Max. load (N)	4.2	4.2	8.7	21	22	30.7	52.5

Overall dimensions and technical information are provided solely for informative purposes and may be modified without notice

Basic version

Ordering code	Description
1280.Ø.stroke	Basic version
1291.Ø.stroke	Basic version front spring (max stroke 50 mm)
1292.Ø.stroke	Basic version rear spring from Ø16 (max stroke 50 mm)
12– –.Ø.stroke.A	Adjustable cushioning (from Ø16)
12– –.Ø.stroke.M	Magnetic piston
12– –.Ø.stroke.A.M	Cushioning with magnetic piston (from Ø16)
12– –.Ø.stroke. . . .T	HNBR seals version
12– –.Ø.stroke. . . .V	FPM seals version

Standard version, fully compliant with ISO standards. Can use all available mountings. For single acting type, the maximum stroke is 50 mm., after which overall dimensions increase in length to an extent not proportional to the stroke (and in any case not longer than stroke 100).

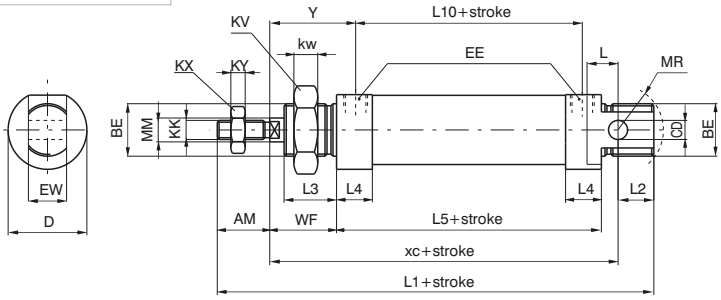

Without rear eye version

Ordering code	Description
1281.Ø.stroke	Without rear eye
1293.Ø.stroke	Without rear eye front spring (max stroke 50 mm)
1294.Ø.stroke	Without rear eye rear spring from Ø16 (max stroke 50 mm)
12– –.Ø.stroke.A	Adjustable cushioning (from Ø16)
12– –.Ø.stroke.M	Magnetic piston
12– –.Ø.stroke.A.M	Cushioning with magnetic piston (from Ø16)
12– –.Ø.stroke. . . .T	HNBR seals version
12– –.Ø.stroke. . . .V	FPM seals version

Version derived from standard version 1260 and not included in ISO standard. Not having a rear eye it is shorter. Rear inlet connection is at 90 like the front one, in line and plugged. The considerations made for the basic type 1280 apply for all single-acting types.

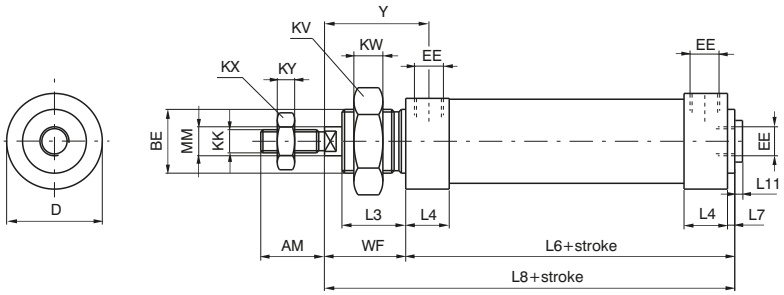

Through rod cylinder version

Ordering code	Description
1282.Ø.stroke	Through rod cylinder version
1282.Ø.stroke.M	Magnetic piston
1282.Ø.stroke.A	Adjustable cushioning (from Ø16)
1282.Ø.stroke.A.M	Cushioning with magnetic piston (from Ø16)
1282.Ø.stroke. . . .T	HNBR seals version
1282.Ø.stroke. . . .V	FPM seals version

This version having rods coming out from both end caps with overall dimensions, except for the rod, equal to 1280 version. This version is not suitable for Ø8 and Ø10 due to difficulty in anchoring the pistons to rods.

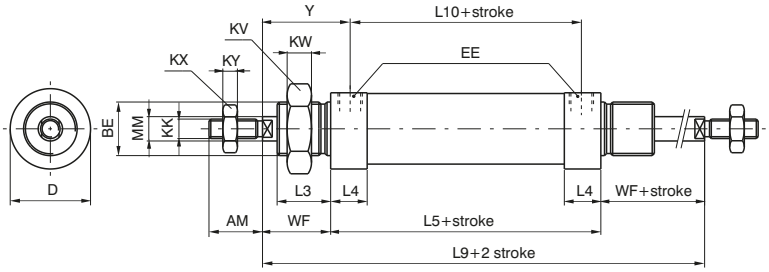

Table of dimensions

		Bore						
		8	**10**	**12**	**16**	**20**	**25**	**32**
AM (-0,2)		12	12	16	16	20	22	20
BE		M12X1,25	M12X1,25	M16X1,5	M16X1,5	M22X1,5	M22X1,5	M30X1,5
CD (H9)		4	4	6	6	8	8	12
D (h11)		16	16	20	21	27	30	38
EE		M5	M5	M5	M5	G1/8"	G1/8"	G1/8"
EW (d13)		8	8	12	12	16	16	26
KK (6g)		M4X0,7	M4X0,7	M6X1	M6X1	M8X1,25	M10X1,25	M10X1,25
KV		17	17	22	22	30	30	42
KW		5,5	5,5	6	6	7	7	8
KX		7	7	10	10	13	17	17
KY		3	3	4	4	5	6	6
L		6	6	9	9	12	13	13
L1 (±1)	*	86	86	105	111	130	141	139
L2		10	10	14	13	15	15	14
L3		12	12	17	17	18	22	22
L4		9	9	9	11	15,5	15	14,5
L5 (±1)	*	46	46	50	56	68	69	69
L6	*	48	48	52	58	70,5	71,5	71,5
L7		2	2	2	2	2,5	2,5	2,5
L8	*	64	64	74	80	94,5	99,5	99,5
L9 (±1,2)	*	78	78	94	100	116	125	125
L10 (±1)	*	37	37	41	45	52,5	53	54,5
L11		1,5	1,5	1,5	1,5	2	2	2
MM (f7)		4	4	6	6	8	10	12
MR		12	12	16	16	18	19	22
WF (±1,2)		16	16	22	22	24	28	28
XC (±1)	*	64	64	75	82	95	104	105
Y (±1,2)		20,5	20,5	26,5	27,5	32	36	35
Stroke tolerance: until stroke 100 +1,5 mm, beyond +2 mm								
Weight	stroke 0	30	35	65	80	160	200	310
g	every 10mm	2	2,5	4	5	7,5	11,5	18
Variations of the versions: *without rear eye version*								
Weight	stroke 0	25	30	60	75	150	185	290
g	every 10mm	2	2,5	4	5	7,5	11,5	18
Through rod cylinder version								
Weight	stroke 0	35	40	75	95	200	250	370
g	every 10mm	2,5	3	6	7	10,5	15,5	24

Dimensions marked with * do not increase proportionally to stroke for rear spring version (over 25 mm stroke).

Overall dimensions and technical information are provided solely for informative purposes and may be modified without notice

Series 1200, Rolled end caps “MIR-INOX”

Construction characteristics

End caps	stainless steel AISI 316
Barrel	stainless steel AISI 304
Piston rod	stainless steel
Piston	aluminium
Piston seals	Standard: NBR oil resistant rubber, PUR piston rod seals (FPM seals available upon request)
Mounting	stainless steel AISI 304
Forks	stainless steel AISI 304

Operational characteristics

Fluid	Filtered air. No lubrication needed, if applied it shall be continuous.
Maximum working pressure	10 bar
Working temperature	-5°C - +70°C with standard seals magnetic or non magnetic piston -5°C - +80°C with FPM seals magnetic piston -5°C - +150°C with FPM seals non magnetic piston

Please follow the suggestions below to ensure a long life for these cylinders:
- use clean and lubricated air
- correct alignment during assembly with regard to the applied load so as to avoid radial components or bending the rod.
- avoid high speeds together with long strokes and heavy loads: this would produce kinetic energy which the cylinder cannot absorb, especially if used as a limit stop (in this case use mechanical stop device)
- evaluate the environmental characteristics of cylinder used (high temperature, hard atmosphere, dust, humidity etc.)

Please note: air must be dried for applications with lower temperature.
Use hydraulic oils H class (ISO VG32) for correct continued lubrication.
Our Technical Department will be glad to help.

Standard strokes
Double acting version
Ø16 : 15 - 25 - 50 - 75 - 80 - 100 - 150 - 160 - 200 - 250 - 300 mm
Ø20 - Ø25 : 15 - 25 - 50 - 75 - 80 - 100 - 150 - 160 - 200 - 250 - 300 - 320 - 350 - 400 mm
Ø32 : 15 - 25 - 50 - 75 - 80 - 100 - 150 - 160 - 200 - 250 - 300 - 320 - 350 - 400 - 450 - 500 mm
On request are available strokes up to:
Ø16 : 700 mm
Ø20 - Ø32: 1000 mm

Overall dimensions and technical information are provided solely for informative purposes and may be modified without notice

Basic version

Ordering code	Description
1280.Ø.stroke.X	Inox non-magnetic version, NBR seals
1280.Ø.stroke.XV	Inox non-magnetic, FPM seals
1280.Ø.stroke.AX	Inox non-magnetic version with cushions*, NBR seals
1280.Ø.stroke.AXV	Inox non-magnetic version with cushions*, FPM seals
1280.Ø.stroke.MX	Inox magnetic version, NBR seals
1280.Ø.stroke.MXV	Inox magnetic version, FPM seals
1280.Ø.stroke.AMX	Inox magnetic version with cushions*, NBR seals
1280.Ø.stroke.AMXV	Inox magnetic version with cushions*, FPM seals

* no adjustable cushioning

Standard version, fully complying with ISO standards.

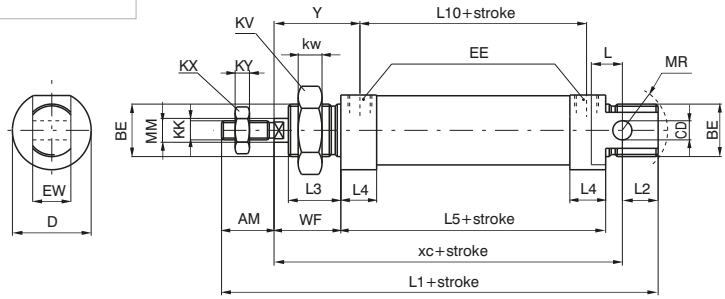

Through rod cylinder version

Ordering code	Description
1282.Ø.stroke.X	Inox non-magnetic version, NBR seals
1282.Ø.stroke.XV	Inox non-magnetic, FPM seals
1282.Ø.stroke.AX	Inox non-magnetic version with cushions*, NBR seals
1282.Ø.stroke.AXV	Inox non-magnetic version with cushions*, FPM seals
1282.Ø.stroke.MX	Inox magnetic version, NBR seals
1282.Ø.stroke.MXV	Inox magnetic version, FPM seals
1282.Ø.stroke.AMX	Inox magnetic version with cushions*, NBR seals
1282.Ø.stroke.AMXV	Inox magnetic version with cushions*, FPM seals

* no adjustable cushioning

This version having rods coming out from both end caps, with overall dimensions, except for the rod, equal to 1280 version.

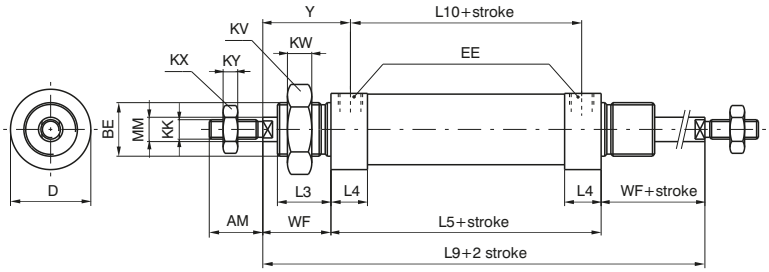

Table of dimensions

Bore	AM	BE	CD	D	EE	EW	KK	KV	KW	KX	KY	L	L1	L2	L3	L4	L5	L9	L10	MM	MR	WF	XC	Y
16	16	M16X1,5	6	21	M5	12	M6X1	22	6	10	4	9	111	13	17	10,5	56	100	45	6	16	22	82	27,5
20	20	M22X1,5	8	27	G1/8"	16	M8X1,25	30	7	13	5	12	130	15	18	10,5	68	116	52,5	8	18	24	95	32
25	22	M22X1,5	8	30	G1/8"	16	M10X1,25	30	7	17	6	13	140	15	22	15,5	68	125	52,5	10	18	28	104	36
32	20	M30X1,5	12	38	G1/8"	26	M10X1,25	42	8	17	6	13	139	14	22	14,5	69	125	54,5	12	22	28	105	35

	Standard weight (g)		Weight through rod version (g)	
Bore	**Stroke 0**	**every 10 mm**	**Stroke 0**	**every 10 mm**
16	145	5	180	7
20	280	8	330	11
25	370	12	440	16
32	580	18	660	24

Overall dimensions and technical information are provided solely for informative purposes and may be modified without notice

Series 1200, TECNO-MIR

Construction characteristic

End caps	nylon 66 reinforced with glass fibres
Barrel	nylon 66 reinforced with glass fibres
Piston rod	C43 Chromed (non magnetic piston version) stainless steel (magnetic piston version)
Piston	aluminium
Seal	NBR oil-resistant rubber seal
Piston rod seal	PUR
Mounting	steel painted / stainless steel AISI 304
Forks	zinc plated steel / stainless steel AISI 304

Operational characteristics

Fluid	Filtered air. No lubrication needed, if applied it shall be continuous.
Maximum working pressure	8 bar
Working temperature	-5°C - +50°C

Please follow the suggestions below to ensure a long life for these cylinders:
- use clean and lubricated air
- correct alignment during assembly with regard to the applied load so as to avoid radial components or bending the rod.
- avoid high speeds together with long strokes and heavy loads: this would produce kinetic energy which the cylinder cannot absorb, especially if used as a limit stop (in this case use mechanical stop device)
- evaluate the environmental characteristics of cylinder used (high temperature, hard atmosphere, dust, humidity etc.)

Please note: air must be dried for applications with lower temperature.
Use hydraulic oils H class (ISO VG32) for correct continued lubrication.
Our Technical Department will be glad to help.

Standard strokes

Double acting version

Ø12 : 15 - 25 - 50 - 75 - 80 - 100 - 125 - 150 - 160 - 200 mm
Ø16 : 15 - 25 - 50 - 75 - 80 - 100 - 125 - 150 - 160 - 200 - 250 mm
Ø20 - Ø25 : 15 - 25 - 50 - 75 - 80 - 100 - 125 - 150 - 160 - 200 - 250 - 300 mm
On request are available strokes up to:
Ø12 : 200 mm
Ø16 : 250 mm
Ø20 - Ø25: 300 mm

Maximum tightening torque for fittings

Bore	Thread	Maximum torque (Nm)
Ø 12	M5	1
Ø 16	M5	1
Ø 20	G 1/8”	4
Ø 25	G 1/8”	4

WEIGHT TABLE SERIES TECNO MIR 1230 - 1231					
WEIGHT g	Bore	Ø12	Ø16	Ø20	Ø25
	storke 0	50 gr.	65 gr.	120 gr.	160 gr.
	every 10mm	3,75 gr.	4 gr.	6,5 gr.	9 gr.

WEIGHT TABLE SERIES TECNO MIR 1232					
WEIGHT g	Bore	Ø12	Ø16	Ø20	Ø25
	stroke 0	60 gr.	75 gr.	180 gr.	200 gr.
	every 10mm	7 gr.	8,5 gr.	10 gr.	20 gr.

Overall dimensions and technical information are provided solely for informative purposes and may be modified without notice

Basic version

Ordering code	Description
1230.Ø.stroke	Basic version
1230.Ø.stroke.M	Basic version magnetic piston

Standard version, fully complying with ISO standards. Can use all available mountings.

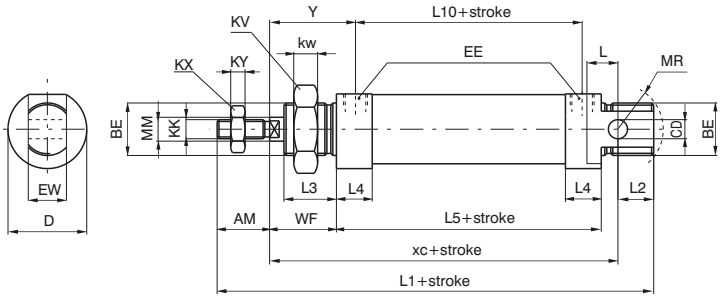

Without rear eye version

Ordering code	Description
1231.Ø.stroke	Without rear eye version
1231.Ø.stroke.M	Without rear eye version magnetic piston

This version derived from standard version 1230 and not included in ISO standard.
Not having a rear eye it is shorter. The inlet connection is lateral on the rear caps (like on the front caps).

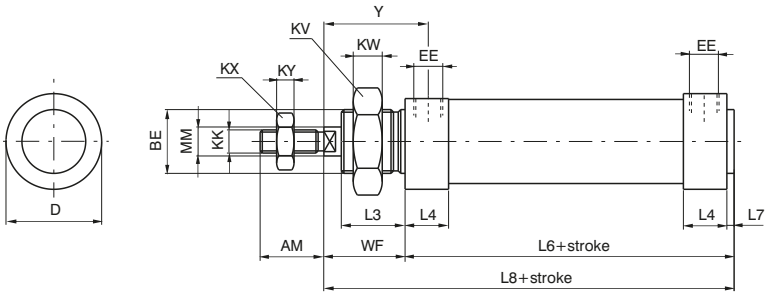

Through rod cylinder version

Ordering code	Description
1232.Ø.stroke	Through rod cylinder version
1232.Ø.stroke.M	Through rod cylinder version magnetic piston

Through rod model, dimensions as for the 1230 (except the rod).

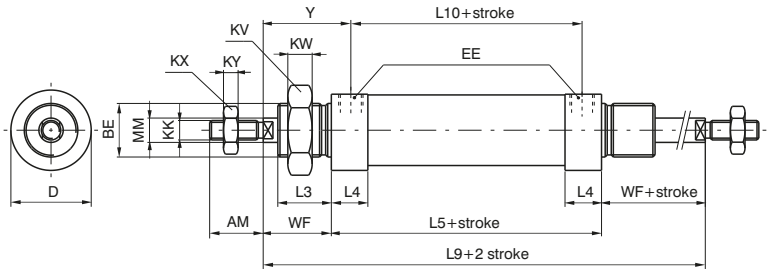

Table of dimensions

Bore	AM (-0,2)	BE	CD (H9)	D (h11)	EE	EW (d13)	KK (6g)	KV	KW	KX	KY	L	L1 (±1)	L2	L3	L4	L5 (±1)	L6	L7	L8	L9 (±1,2)	L10 (±1)	MM (f7)	WF (±1,2)	XC (±1)	Y (±1)
12	16	M16X1,5	6	19	M5	12	M6X1	22	6	10	4	9	105	14	17	13,5	50	52	2	74	94	41	6	22	75	26,5
16	16	M16X1,5	6	23	M5	12	M6X1	22	6	10	4	9	111	13	17	14,5	56	58	2	80	100	45	6	22	82	27,5
20	20	M22X1,5	8	28,5	G1/8"	16	M8X1,25	30	7	13	5	12	130	15	18	20,5	68	70,5	2,5	94,5	116	52	8	24	95	32
25	22	M22X1,5	8	31,5	G1/8"	16	M10X1,25	30	7	17	6	14	140	14	22	20	68	70,5	2,5	98,5	124	52	10	28	104	36

Series 1200 Steel line

General

The 12X stainless steel ISO 6432 microbore cylinders series are designed for corrosion resistance application such as marine, pharmaceutical and food ambiences.
The pre lubrication grease used is NSF H1 certified for food application.
Specific care has been taken during the design stages and the result is a clean profile cylinder easy to clean and free from possible residue build-up areas. All parts in contact with the external environment are in Stainless steel 316L and the seals are available in three different compounds for different temperature applications:
PUR -30C° - +80C°, FPM -5°C - +150°C and NBR -5°C - +70°C.
The range starts from 16 bore up to 63 bore, double acting version standard or with through rod, magnetic or not magnetic piston available.
The end caps are crimped onto the barrel for bore sizes 16 to 25 and screwed on the barrel from 32 to 63 bore.
Depending on the type of mounting required it is possible to choose different end caps style.
The piston is aluminium and the sensor bracket, when required is in stainless steel 316 with plastic adaptor or in plastic material. The cylinder can be fixed with the wide range of stainless steel accessories.

Construction characteristics

End caps, barrel, piston rod	Stainless steel AISI 316
Piston	Aluminium
Seals	NBR (PUR piston rod seals) FPM PUR
Fixing / Accessories	AISI 316 / 304

Operational characteristics

Fluid	Filtered air. No lubrication needed, if applied it shall be continuous.
Max. pressure	10 bar
Bore	Ø 16 - 20 - 25 - 32 - 40 - 50 - 63
Cushioning lenght	mm 15 - 18 - 18 - 18 - 22 - 22 - 25

Operating temperature

Seals material	Operating temperature	Piston		Cushioning		Bores
		Magnetic	Non magnetic	Pneumatic adjustable	Pneumatic fix	
NBR	-5°C - +70°C	●	●	●	●	Ø16-Ø20-Ø25-Ø32-Ø40-Ø50-Ø63
FPM	-5°C - +80°C	●		●	●	Ø16-Ø20-Ø25-Ø32-Ø40-Ø50-Ø63
	-5°C - +150°C		●	●	●	Ø16-Ø20-Ø25-Ø32-Ø40-Ø50-Ø63
PUR	-5°C - +70°C	●	●	●		Ø16-Ø20-Ø25-Ø32
	-30°C - +80°C	●	●		●	Ø16-Ø20-Ø25-Ø32
		●	●	●	●	Ø40-Ø50-Ø63

Please follow the suggestions below to ensure a long life for these cylinders:
- use clean and lubricated air
- correct alignment during assembly with regard to the applied load so as to avoid radial components or bending the rod.
- avoid high speeds together with long strokes and heavy loads: this would produce kinetic energy which the cylinder cannot absorb, especially if used as a limit stop (in this case use mechanical stop device)
- evaluate the environmental characteristics of cylinder used (high temperature, hard atmosphere, dust, humidity etc.)

Please note: air must be dried for applications with lower temperature.
Our Technical Department will be glad to help.

Standard strokes

Ø16 :

15 - 25 - 50 - 75 - 80 - 100 - 150 - 160 - 200 - 250 - 300 mm

Ø20 - Ø25 :

15 - 25 - 50 - 75 - 80 - 100 - 150 - 160 - 200 - 250 - 300 - 320 - 350 - 400 mm

Ø32 - Ø63 :

15 - 25 - 50 - 75 - 80 - 100 - 150 - 160 - 200 - 250 - 300 - 320 - 350 - 400 - 450 - 500 mm

Overall dimensions and technical information are provided solely for informative purposes and may be modified without notice

Coding key

12X _ _ . _ _ _ . _ _ _ _ . _ . _

FUNCTION	
A	Double acting 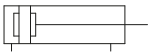
B	Double acting cushioned 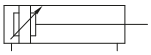
C	Double acting through rod 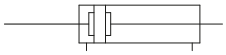
D	Double acting cushioned through rod 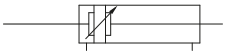

BORE
016
020
025
032
040
050
063

STROKE

MAGNETIC PISTON VARIANTS	
M	Magnetic piston max. temperature +80°C
N	Non magnetic piston

SEALS	
N	NBR
V	FPM
P	PUR

	TYPE		
	FRONT END CAP	BASIC VERSION	REAR END CAP
A	CLEAN PROFILE	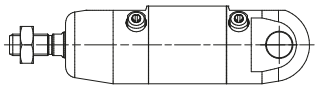	WITH INTEGRATED TRUNNION
B	CLEAN PROFILE	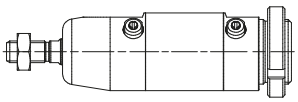	THREADED
C	THREADED	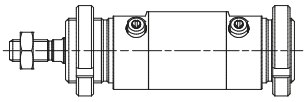	THREADED
D	THREADED	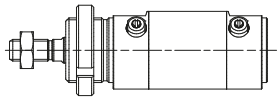	SHORT END CAP
E*	FOR PIN	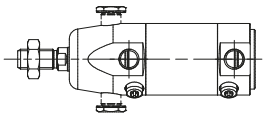	SHORT END CAP

* Available only for Ø32 - Ø40 - Ø50 - Ø63

	END CAP	THROUGH ROD CYLINDER VERSION	END CAP
S	THREADED	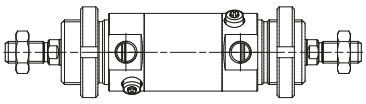	THREADED
T	THREADED	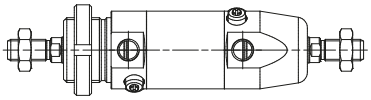	CLEAN PROFILE

Cylinder type "A"

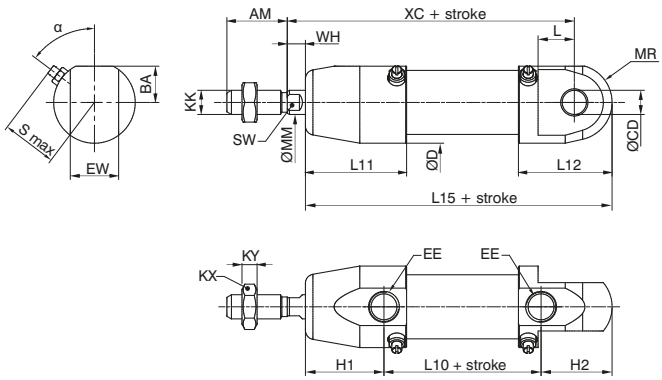

from Ø16 to Ø25

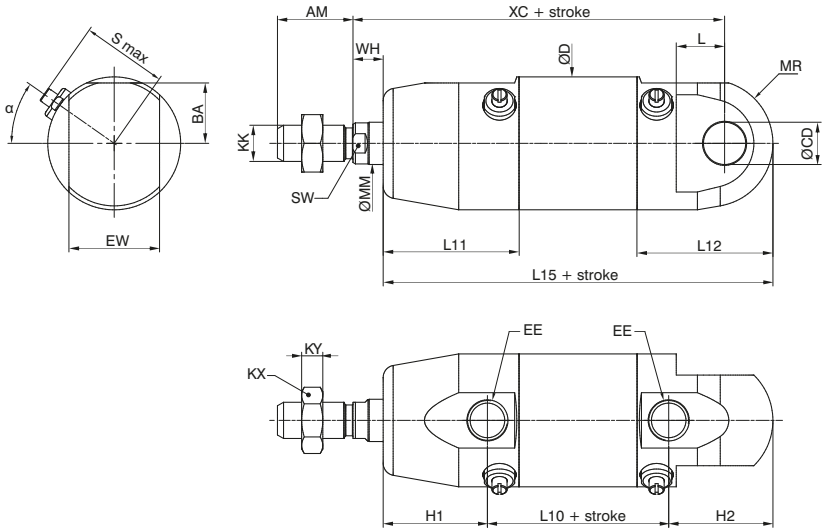

from Ø32 to Ø63

Cylinder type "B"

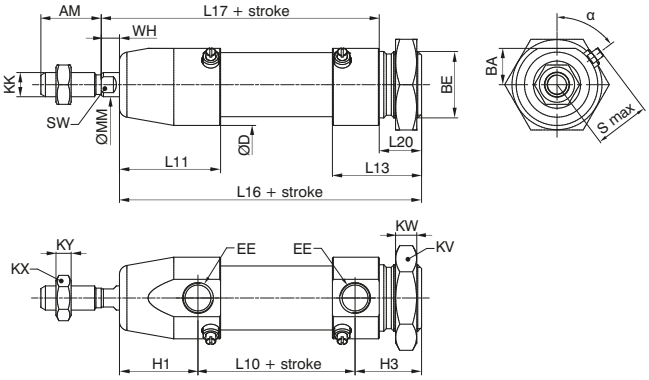

from Ø16 to Ø25

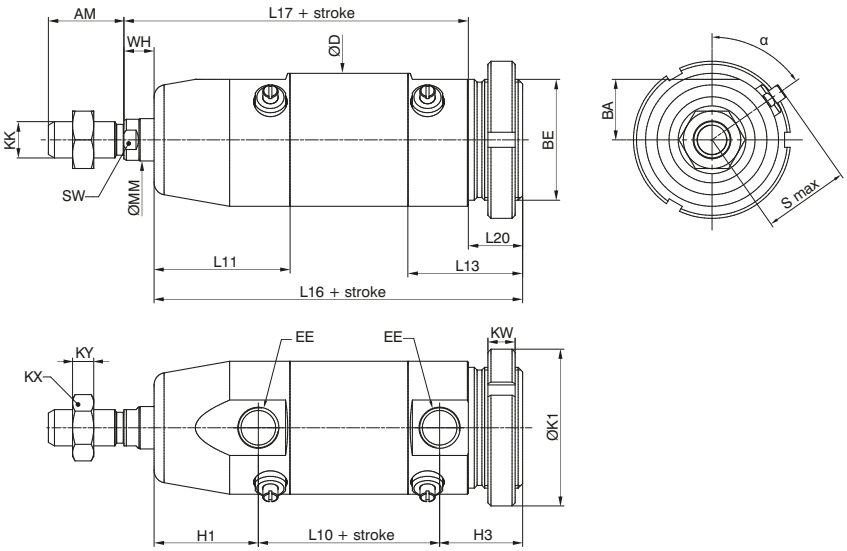

from Ø32 to Ø63

Overall dimensions and technical information are provided solely for informative purposes and may be modified without notice

Cylinder type "C"

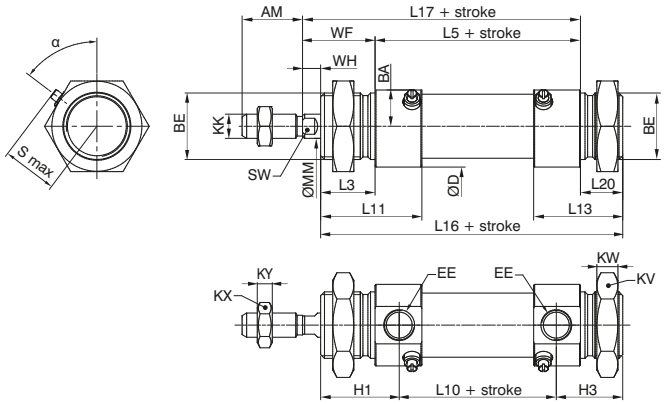

from Ø16 to Ø25

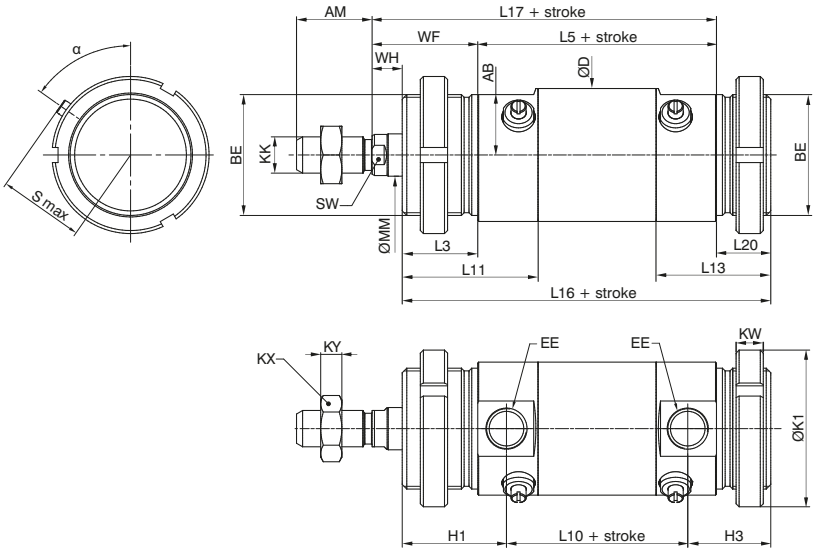

from Ø32 to Ø63

Cylinder type "D"

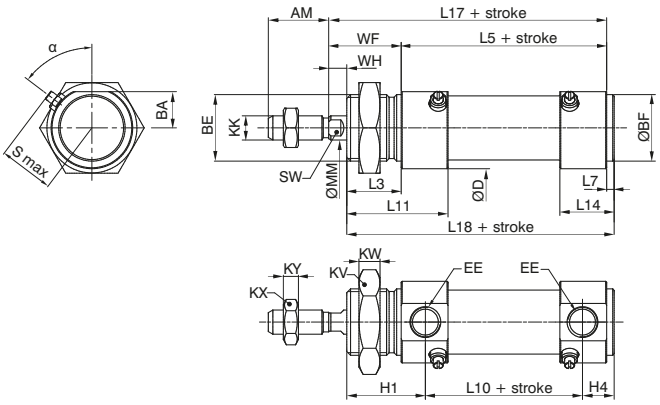

from Ø16 to Ø25

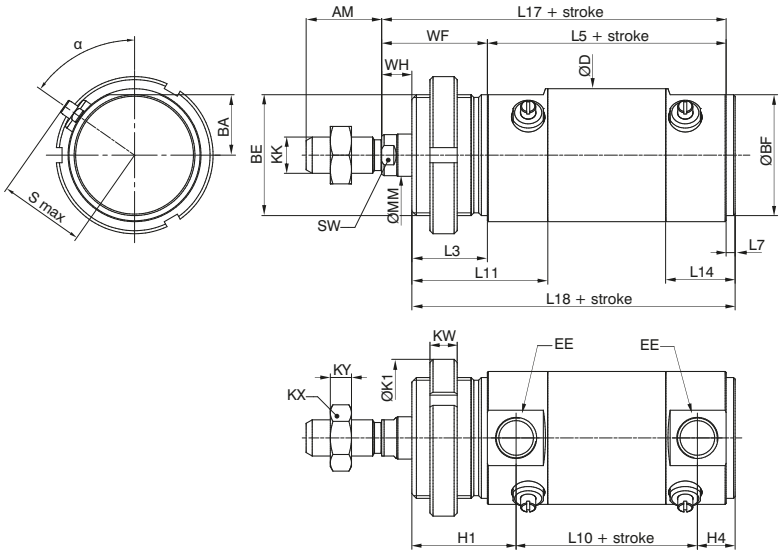

from Ø32 to Ø63

Cylinder type "E"

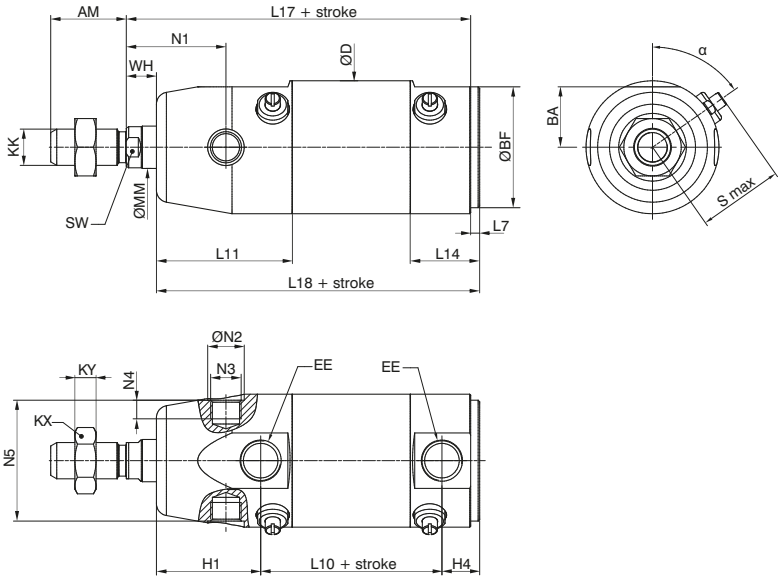

from Ø32 to Ø63

Cylinder type "S"

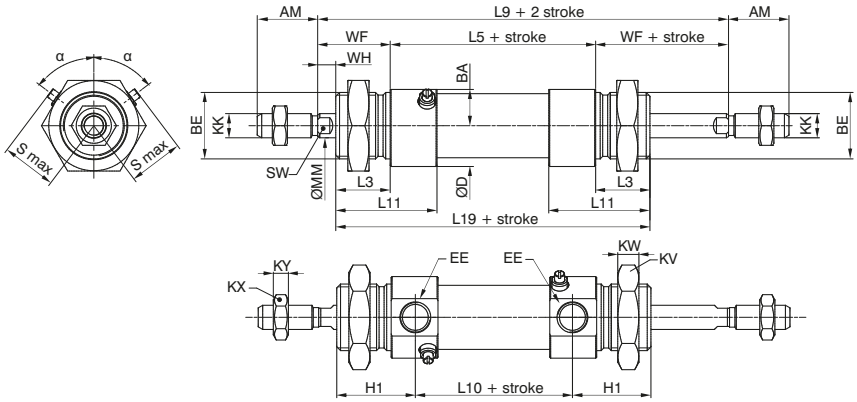

from Ø16 to Ø25

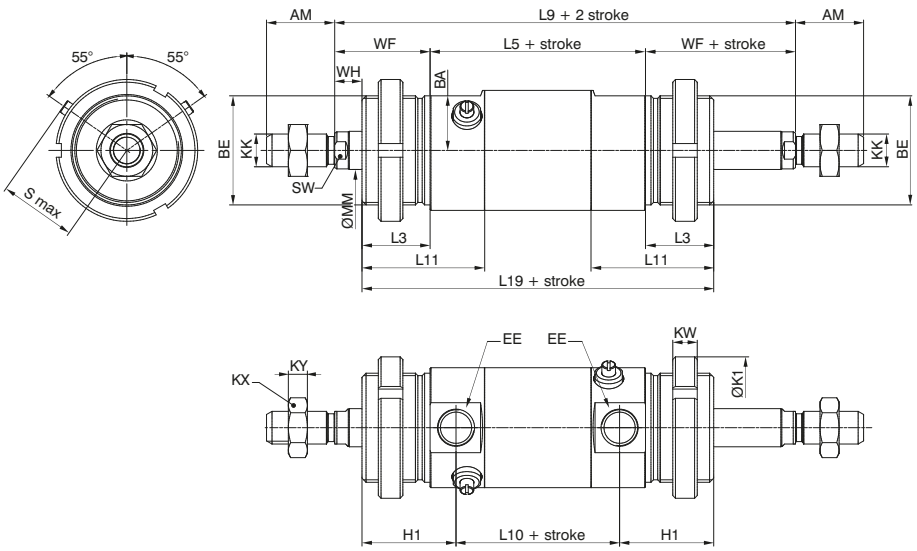

from Ø32 to Ø63

Overall dimensions and technical information are provided solely for informative purposes and may be modified without notice

Cylinder type "T"

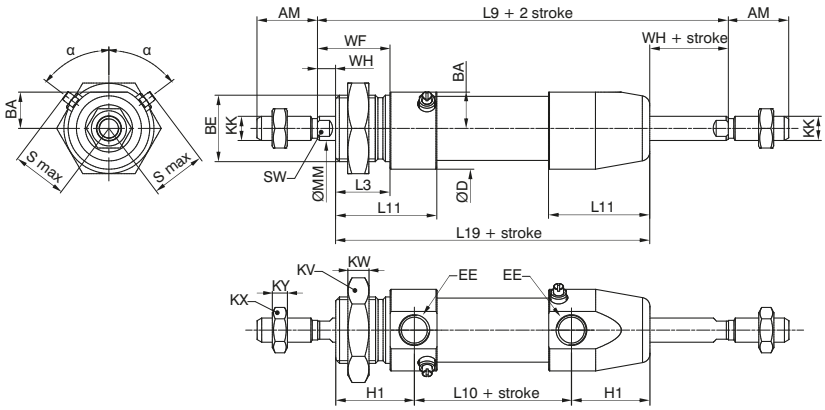

from Ø16 to Ø25

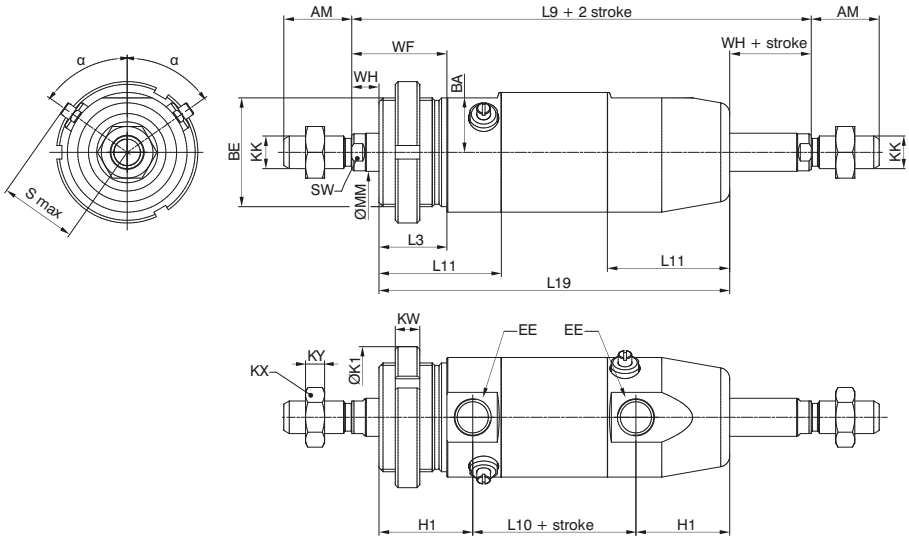

from Ø32 to Ø63

Weight charts

	BASIC VERSION		WEIGHT (g)						
			Ø16	Ø20	Ø25	Ø32	Ø40	Ø50	Ø63
A	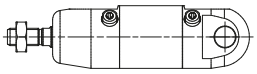	Stroke 0	131	264	371	621	1060	1600	3150
		every each 10mm	5	7	11	26	33	42	65
B	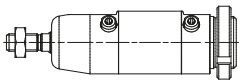	Stroke 0	150	310	410	666	1160	1700	3230
		every each 10mm	5	7	11	26	33	42	65
C	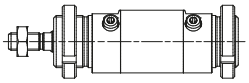	Stroke 0	153	323	411	688	1200	1660	3060
		every each 10mm	5	7	11	26	33	42	65
D	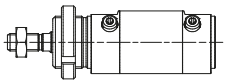	Stroke 0	129	267	359	580	1020	1460	2800
		every each 10mm	5	7	11	26	33	42	65
E*	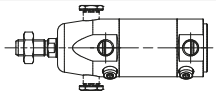	Stroke 0	/	/	/	558	960	1480	2930
		every each 10mm	/	/	/	26	33	42	65

* Available only for Ø32 - Ø40 - Ø50 - Ø63

	THROUGH ROD CYLINDER VERSION		Ø16	Ø20	Ø25	Ø32	Ø40	Ø50	Ø63
S	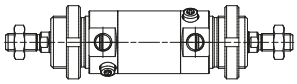	Stroke 0	172	350	465	745	1364	1793	3318
		every each 10mm	7	11	18	35	48	58	90
T	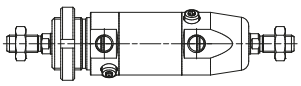	Stroke 0	181	336	470	723	1299	1832	3483
		every each 10mm	7	11	18	35	48	58	90

Table of dimensions

Bore	Ø16	Ø20	Ø25	Ø32	Ø40	Ø50	Ø63
α	53°	53°	53°	55°	55°	55°	55°
AM	16	20	22	20	25	25	32
BA	9	12	13,5	16	20	25	31
BE	M16x1,5	M22x1,5	M22x1,5	M30x1,5	M40x1,5	M40x1,5	M45x1,5
ØBF	16	22	22	30	40	40	45
EE	M5	G1/8	G1/8	G1/8	G1/4	G1/4	G3/8
EW	12	16	16	26	30	30	40
ØCD ^{H9}	6	8	8	12	14	14	16
ØD	21	27	30	36	44	54	68
H1	22,5	26	30	30	34,5	34,5	40
H2	17,5	23,5	27,5	30	34,5	34,5	40
H3	16,5	22	22	23	27,5	27,5	30
H4	7,5	10,5	10,5	10,5	12,5	12,5	16
ØK1	/	/	/	/	52	52	60
KK	M6x1	M8x1,25	M10x1,25	M10x1,25	M12x1,75	M12x1,75	M16x1,5
KX	10	13	17	17	19	19	24
KY	4	5	6	6	7	7	8
KV	22	30	30	42	/	/	/
KW	6	7	7	8	9	9	10
L	9	12	14	13	16	16	22
L3	17	18	22	22	25	25	28
L5	56	68	69	69	79	82	106
L7	2	2,5	2,5	2,5	3	3	4
L9	100	116	125	125	149	152	180
L10	45	52	53	53	60	63	82
L11	28	33,5	37	38,5	45	45	54
L12	23	31	34,5	38,5	45	45	54
L13	22	29,5	29	31,5	38	38	44
L14	12,8	18	17,5	19	23	23	30
L15	85	101,5	110,5	113	129	132	162
L16	84	100	105	106	122	125	152
L17	78	92	97	97	114	117	143
L18	75	88,5	93,5	93,5	107	110	138
L19	90	104	113	113	129	132	162
L20	11	14	14	15	18	18	18
ØMM	6	8	10	12	14	16	20
MR	8	12,5	12,5	17	21	26	34,5
N1	/	/	/	27	33	40	45
ØN2 $^{+0/-0,05}$	/	/	/	10,1	12,1	14,1	16,1
N3	/	/	/	M8x0,75	M10x1	M12x1	M14x1
N4	/	/	/	5,5	6	8,7	11,7
N5 $^{+0,1/-0}$	/	/	/	32	40	50	64
Smax	15,5	18,5	19,5	25	28,5	33,5	40
SW	5	6	8	10	12	12	17
WF	22	24	28	28	35	35	37
WH	5	6	6	6	10	10	9
XC	82	95	104	105	123	126	154

Overall dimensions and technical information are provided solely for informative purposes and may be modified without notice

Accessories and fixing devices

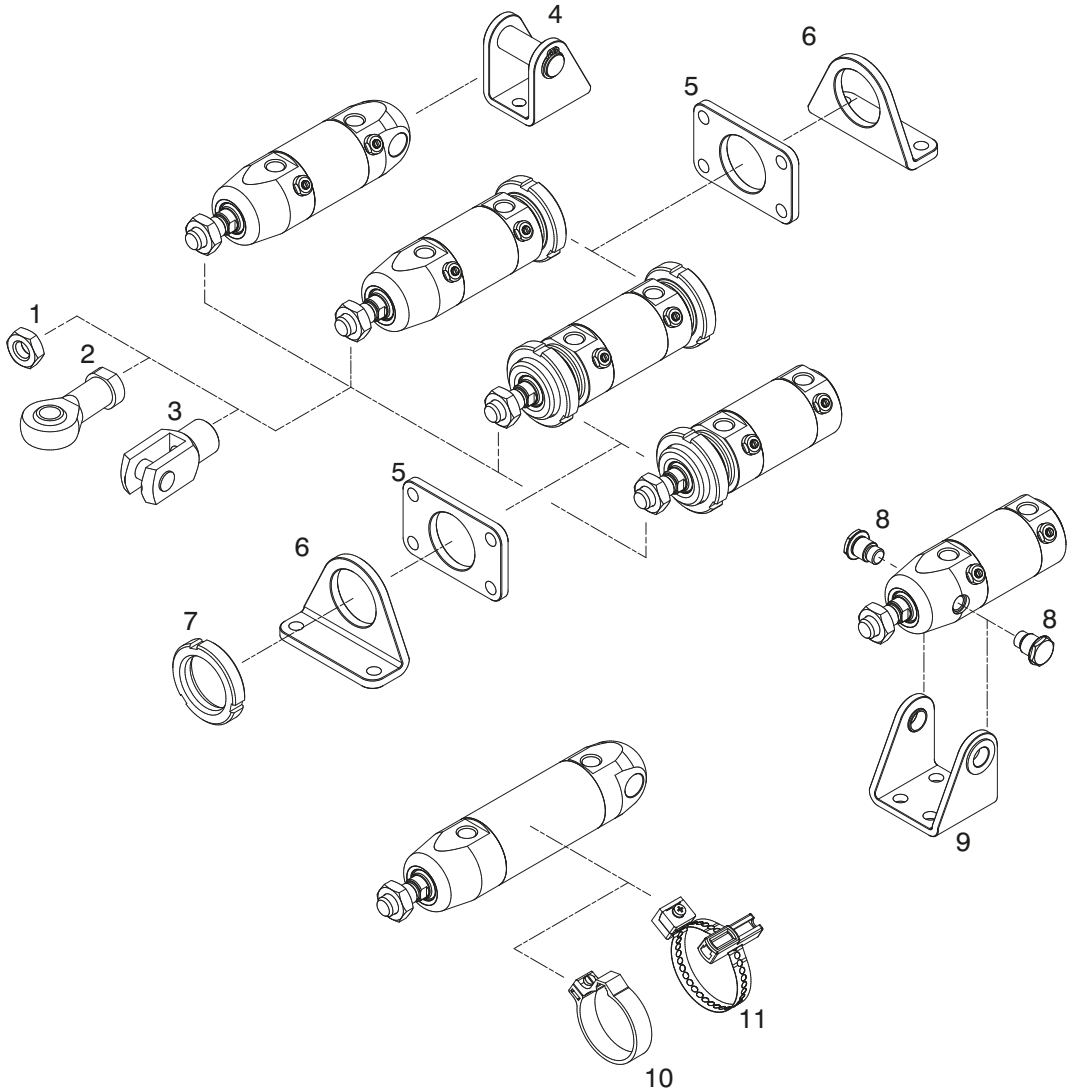

Position	Description	Ordering code	Materials
1	Rod lock nut	12X.Ø.11	Stainless steel AISI 316
2	Ball joint	12X.Ø.10	Stainless steel
3	Fork	12X.Ø.04	Stainless steel
4	Rear clevis	12X.Ø.03	Stainless steel
5	Flange	12X.Ø.02	Stainless steel AISI 316
6	Foot	12X.Ø.01	Stainless steel AISI 316
7	Nut or lock nut for the endcaps	12X.Ø.05	Stainless steel AISI 316
8	Pin for front clevis (Ø32 - Ø63)	12X.Ø.09	Stainless steel AISI 316
9	Front clevis (Ø32 - Ø63)	12X.Ø.08	Stainless steel AISI 316
10	Sensor clamp (Ø16 - Ø50)	12X.Ø.FS	Technopolymer
11	Sensor clamp (Ø16 - Ø63)	12X.Ø.FSX	Stainless steel Technopolymer

Sensor clamps cod. 1580._, MRS._, MHS._

Ordering code
12X.Ø.FS

The kit comprises:
n° 1 clamp (Technopolymer)
n° 1 screw (AISI 304)
n° 1 nut (AISI 304)

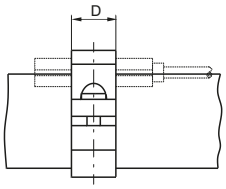

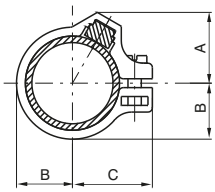

Table of dimensions

Bore	Ø16	Ø20	Ø25	Ø32	Ø40	Ø50
A	14,5	16	17,5	20,5	22	29
B	10,5	12,5	15,3	20	24	29
C	16	18	20,5	26	30	35
D	10	10	10	10	10	10
Weight (g)	3	5	7	8	10	11

Sensor clamps cod. 1580._, MRS._, MHS._

Ordering code
12X.Ø.FSX

The kit comprises:
n° 1 clamp (AISI 304)
n° 1 switch bracket + support (Technopolymer)
n° 1 screw (AISI 304)
n° 1 nut (AISI 304)

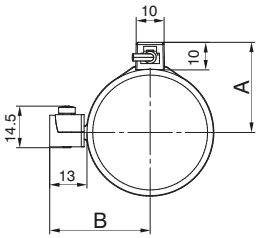

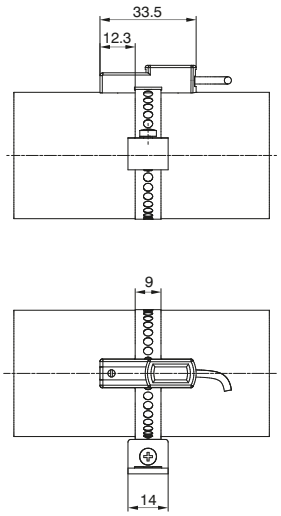

Table of dimensions

Bore	Ø16	Ø20	Ø25	Ø32	Ø40	Ø50	Ø63
A	19	21	23	28	32	37	44
B	22	24	26	31	35	40	47

Overall dimensions and technical information are provided solely for informative purposes and may be modified without notice

Foot

Ordering code
12X.Ø.01

The kit comprises:
n° 1 foot (AISI 316)

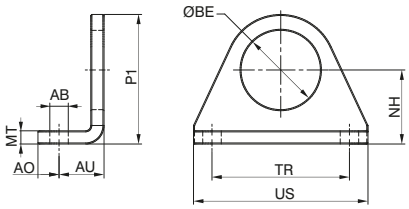

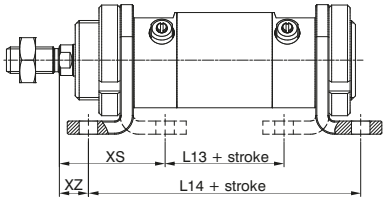

Used to mount the cylinder on the mounting plane with the rod parallel to said plane. Use one for short strokes and two for long strokes.
It is made stamped stainless steel AISI 316.

Bore	16	20	25	32	40	50	63
AB (H13)	5,5	6,5	6,5	6,5	9	9	9
AO	6	8	8	8	10	10	10
AU	14	17	17	17	20	20	20
ØBE	16	22	22	30	40	40	45
L13 (±1)	36	44	44	45	49	52	78
L14 (±1)	84	102	102	103	119	122	146
MT	4	5	5	5	5	5	6
NH (±0.3)	20	25	25	28	40	40	50
P1	33	45	45	50	66,5	66,5	80
TR (Js14)	32	40	40	52	70	70	70
US	42	54	54	66	90	90	90
XS (±1.4)	32	36	40	40	50	50	51
XZ (±1.4)	8	7	11	11	15	15	17
Weight g.	45	90	90	110	210	210	262

Flange

Ordering code
12X.Ø.02

The kit comprises:
n° 1 flange (AISI 316)

(For Ø16 - Ø20 - Ø25)

(For Ø32 - Ø40 - Ø50 - Ø63)

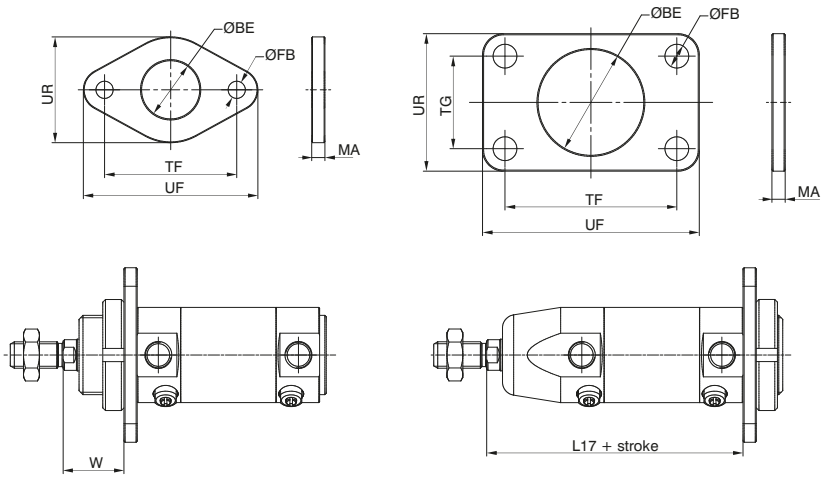

Use to mount the microcylinder at a right angle to the mounting plane.
Made of stainless steel AISI 316.

Bore	16	20	25	32	40	50	63
ØBE	16	22	22	30	40	40	45
ØFB (H13)	5,5	6,5	6,5	6,5	9	9	9
UF	53	66	66	68	82	82	96
UR	30	40	40	50	52	52	70
MA	4	5	5	5	5	5	6
TF (JS14)	40	50	50	52	65	65	76
TG	/	/	/	/	35	35	50
W (±1.4)	18	19	23	23	30	30	31
L17	78	92	97	97	114	117	143
Weight g.	40	85	85	100	105	105	225

Rear clevis

Ordering code
12X.Ø.03

The kit comprises:
n° 1 clevis (AISI 316)
n° 1 pin (AISI 316)
n° 2 circlips (AISI 420)

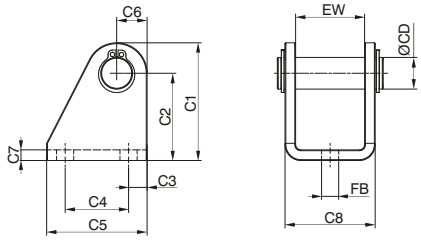

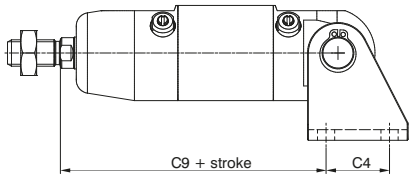

Used to mount by using the rear end cover to mount either parallel or at a right angle to the mounting plane. Allows the cylinder to oscillate and self-align with the linked element to the rod. Necessary to use when the rod may be subject to lateral forces during travel.
Made of stamped stainless steel.

Bore	16	20	25	32	40	50	63
ØCD	6	8	8	12	14	14	16
C1	33,5	39,5	39,5	44,5	53,5	53,5	64
C2 (±0.3)	27	30	30	33	40	40	50
C3	5	6	6	7	10	10	8
C4	15	20	20	24	28	28	34
C5	25	32	32	38	45	45	50
C6	6,5	9,5	9,5	11,5	13,5	13,5	14
C7	3	4	4	4	4	4	6
C8	18	24	24	34	38	38	52
C9 (±0.4)	80,5	91,5	100,5	100,5	119,5	122,5	148
EW	12,1	16,1	16,1	26,1	30,5	30,5	40,5
FB (H13)	5,5	6,5	6,5	6,5	8,5	8,5	9
Weight (g)	35	75	75	135	138	138	284

Rod lock nut / Nut or lock nut for the end cap

Ordering code
Rod lock nut **12X.Ø.11**
Nut / Lock nut for the end cap **12X.Ø.05**

The kit comprises:
n° 1 rod lock nut (AISI 316)

The kit comprises:
n° 1 nut / lock nut
for the end cap (AISI 316)

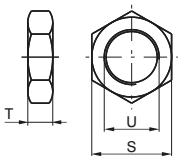

Rod lock nut:
Mounted on the rod thread.
Made of stainless steel AISI 316.
Nut / Lock nut for the end cap:
Used to fasten flanges or feet to the endcaps of the microcylinder. The nuts are mounted on diameters that go from Ø16 to Ø25 mm, the lock nuts from Ø32 to Ø63 mm. Both are supplied with the microbore cylinders.

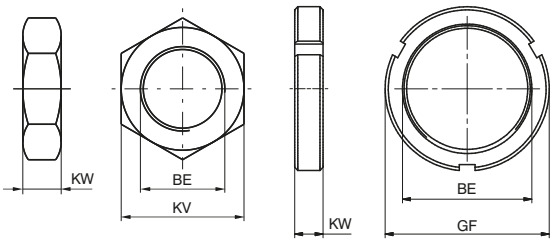

Bore	S	T	U	Dado stelo Weight (g)	BE	KV	GF	KW	Nut / Lock nut for the end caps weight (g)
16	10	4	M6X1	3	M16X1,5	22	-	6	16
20	13	5	M8X1,25	4	M22X1,5	30	-	7	25
25	17	6	M10X1,25	9	M22X1,5	30	-	7	25
32	17	6	M10X1,25	9	M30X1,5	-	42	8	42
40	19	7	M12X1,75	12	M40X1,5	-	52	9	62
50	19	7	M12X1,75	12	M40X1,5	-	52	9	62
63	24	8	M16X1,5	21	M45X1,5	-	60	10	100

Overall dimensions and technical information are provided solely for informative purposes and may be modified without notice

Front clevis

Ordering code
12X.Ø.08

The kit comprises:
n° 1 clevis (AISI 316)
n° 2 bushings (Technopolymer)

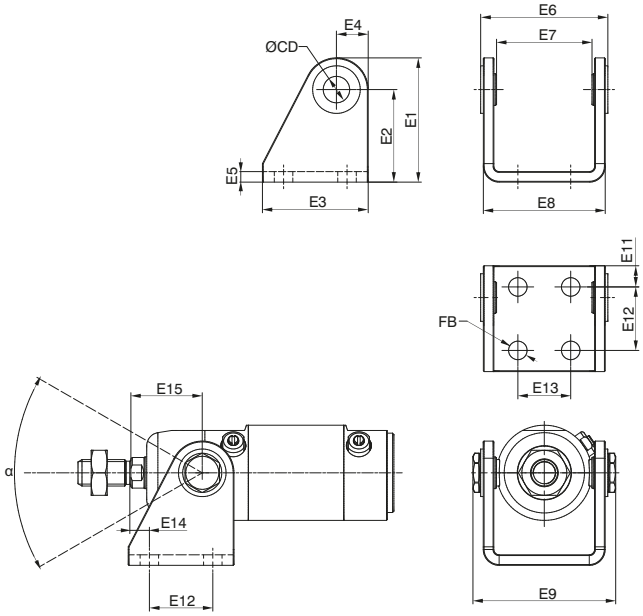

Used to mount by using the front end cap to mount parallel to the mounting plane. Allows the cylinder to oscillate and self-align with the linked element to the rod. Necessary to use when the rod may be subject to lateral forces during travel. Made of stamped stainless steel AISI 316.

Bore	E1	E2 (±0,2)	E3	E4	E5	E6	E7	E8	E9	E11	E12	E13	E14	E15	FB (H13)	ØCD	α	Weight (g)
32	47	35	40	12	4	48	36	46	54	8	24	20	7	27	7	10	50°	121
40	53	40	50	13	4	60	49	58	68	10	30	28	6	33	9	12	50°	175
50	59	45	54	14	6	74	54	72	84	10	34	36	10	40	9	14	50°	330
63	65	50	65	16	6	88	72	86	98	15	35	42	11	45	9	16	40°	458

Pin for front clevis

Ordering code
12X.Ø.09

The kit comprises:
n° 1 pin (AISI 316)

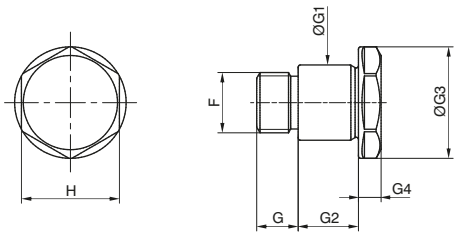

Bore	32	40	50	63
G	5,5	6	8,5	11
G1 (h7)	10	12	14	16
G2	8	10	12	12
G3	15	17	19	24
G4	3	4	5	5
F	M8X0,75	M10X1	M12X1	M14X1
H	13	15	17	21

Ball joint

Ordering code
12X.Ø.10

The kit comprises:
n° 1 ball joint (AISI 304 and 420)

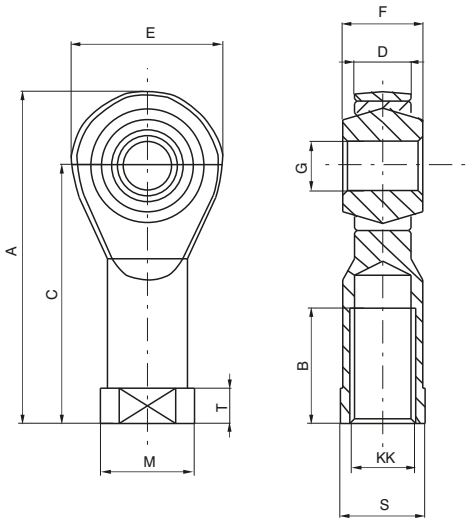

Mounted on the rod thread, assures a regular operation even in the presence of significant forces to the linked element.
Made of stainless steel AISI 304 and 420.

Bore	16	20	25	32	40	50	63
A	40	48	57	57	66	66	85
B	12	16	20	20	22	22	28
C	30	36	43	43	50	50	64
D	6,75	9	10,5	10,5	12	12	15
E	20	24	28	28	32	32	42
F	9	12	14	14	16	16	21
G (H 7)	6	8	10	10	12	12	16
KK	M6	M8	M10X1,25	M10X1,25	M12X1,75	M12X1,75	M16X1,5
M	13	16	19	19	22	22	27
S	11	14	17	17	19	19	22
T	5	5	6,5	6,5	6,5	6,5	8
Weight (g)	25	25	75	75	112	112	222

Cylinder rod fork

Ordering code
12X.Ø.04

The kit comprises:
n° 1 fork (AISI 303)
n° 1 pin (AISI 303)
n° 2 circlips (AISI 420)

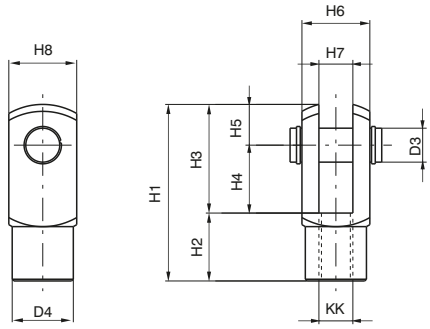

Mounted on the rod thread, assures a regular operation even in the presence of significant forces to the linked element. Made of stainless steel.

Bore	D3	D4	H1	H2	H3	H4	H5	H6	H7 (B12)	H8	KK	Weight (g)
16	6	10	31	12	19	12	7	12	6	12	M6X1	20
20	8	14	42	16	26	16	10	16	8	16	M8X1.25	45
25	10	18	52	20	32	20	12	20	10	20	M10X1.25	90
32	10	18	52	20	32	20	12	20	10	20	M10X1.25	90
40	12	20	62	18	38	24	14	24	12	24	M12X1.75	121
50	12	20	62	18	38	24	14	24	12	24	M12X1.75	121
63	16	26	83	32	51	32	19	32	16	32	M16X1.5	340

Overall dimensions and technical information are provided solely for informative purposes and may be modified without notice

Sensor clamps for microbore cylinders with threaded end covers and Technopolymer

Sensor clamps - codes 1500._, RS._, HS._	Sensor clamps - codes 1580._, MRS._, MHS._
Ordering code	Ordering code
1260.Ø.F	**1260.Ø.FS**

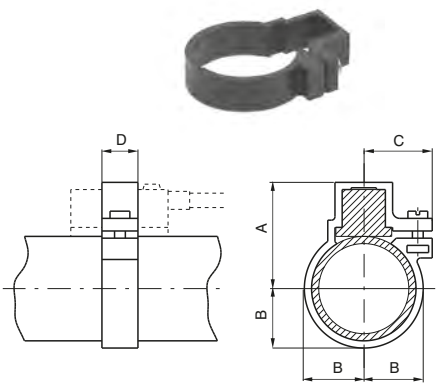

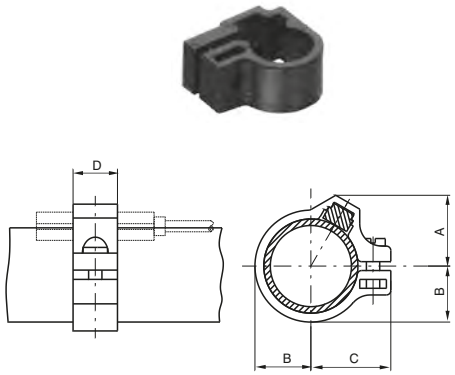

Table of dimensions

Bore	Ø10	Ø12	Ø16	Ø20	Ø25	Ø32	Ø40	Ø50
A	23	23	25	27	29,5	33	37	42
B	10	10	12	14	16,5	20	24	29
C	15	15	16,5	17,5	19	20	22	24
D	10	10	10	10	10	10	10	10
Weight (gr)	2	2	3	5	7	10	14	16

Table of dimensions

Bore	Ø10	Ø12	Ø16	Ø20	Ø25	Ø32	Ø40	Ø50
A	13	14	15,4	17,2	19,3	20,5	22	29
B	9	10	12	14	16,5	20	24	29
C	16	16	18	19,5	22	26	30	35
D	10	10	10	10	10	10	10	10
Weight (gr)	2	2	3	5	7	8	10	11

Sensor clamps for microbore cylinders with rolled end covers "MIR" and "MIR-INOX"

Sensor clamps - codes 1500._, RS._, HS._	Sensor clamps - codes 1580._, MRS._, MHS._
Ordering code	Ordering code
1280.Ø.F - cylinders MIR 1280.Ø.FX - cylinders MIR-INOX	**1280.Ø.FS - cylinders MIR 1280.Ø.FSX - cylinders MIR-INOX**

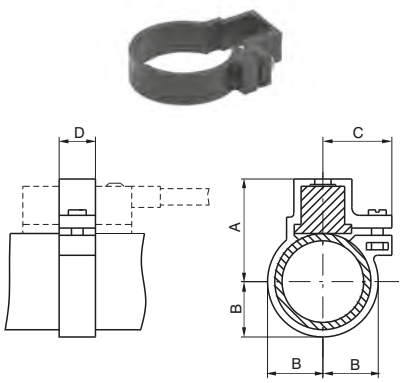

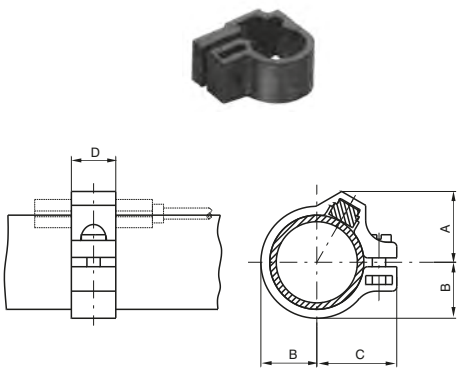

Table of dimensions

Bore	Ø16	Ø20	Ø25	Ø32
A	24	25,5	28,5	31,8
B	10,5	12,5	15,5	18,8
C	16,5	17,5	19	20
D	10	10	10	10
Weight (gr)	3	5	7	10

Table of dimensions

Bore	Ø8	Ø10	Ø12	Ø16	Ø20	Ø25	Ø32
A	11	12	13	14,5	16	17,5	19,5
B	6,5	7,5	8,5	10,5	12,5	15,3	18,8
C	12,5	13,5	15	16	18	20,5	24
D	10	10	10	10	10	10	10
Weight (gr)	2	2	2	3	5	7	10

Sensor for microbore cylinders

For technical characteristics and ordering codes see the magnetic sensors sections

Foot

Ordering code
1200.Ø.01 (1 piece)

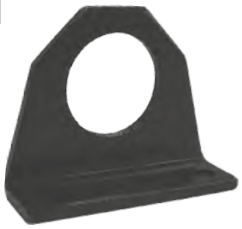

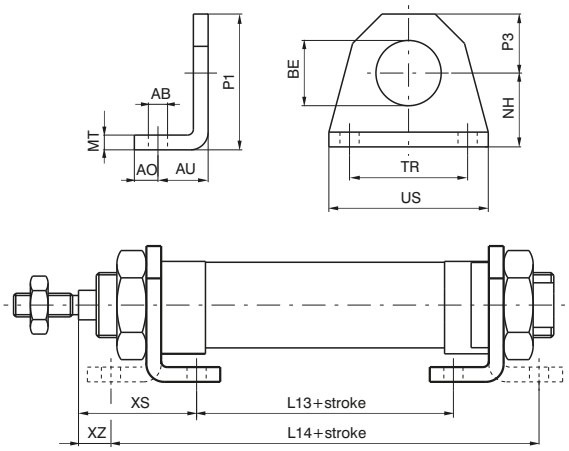

Used to mount the cylinder on the mounting plane with the rod parallel to said plane. Use one for short strokes and two for long strokes. It is made of stamped steel, made corrosion resistant by cataphoreses treatment. Attached to the end caps by means of nuts (or lock nuts) 05.

Attention: the dimensions of microbore cylinders with threaded end covers (*) increase of 10 mm. for microbore cylinders equipped with magnetic piston and spring return, and of 9 mm. for microbore cylinders with 10 mm. BORE magnetic piston.

Bore	8	10	12	16	20	25	32	40	50
AB (H13)	4,5	4,5	5,5	5,5	6,5	6,5	6,5	8,5	8,5
AO	5	5	6	6	8	8	8	10	10
AU	11	11	14	14	17	17	17	20	20
BE	12	12	16	16	22	22	30	40	40
L13 (±1) *	30	30	30	36	44	45	45	49	52
L14 (±1) *	68	68	78	84	102	103	103	119	122
MT	3	3	4	4	5	5	5	5	5
NH (±0,3)	16	16	20	20	25	25	28	40	40
P1	26	26	33	33	45	45	50	70	70
P3	10	10	13	13	20	20	22	30	30
TR (JS14)	25	25	32	32	40	40	52	70	70
US	35	35	42	42	54	54	66	90	90
XS (±1,4)	24	24	32	32	36	40	40	50	50
XZ (±1,4)	5	5	8	8	7	11	11	15	15
Weight g.	22	22	45	45	90	90	110	210	210

Flange

Ordering code
1200.Ø.02 (1 piece)

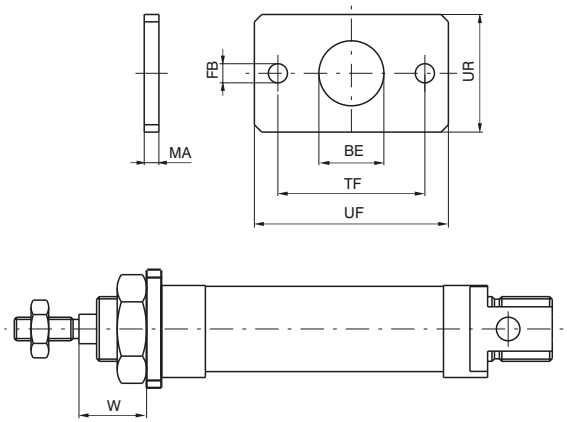

Used to mount the microcylinder at a right angle to the mounting plane. Attached to the front (or rear) end cap by a nut (or lock nut) 05. Made of extruded steel, made corrosion resistant by cataphoresis.

Bore	8	10	12	16	20	25	32	40	50
BE	12	12	16	16	22	22	30	40	40
FB (H13)	4,5	4,5	5,5	5,5	6,5	6,5	6,5	8,5	8,5
UF	40	40	53	53	66	66	68	90	90
UR	25	25	30	30	40	40	50	60	60
MA	3	3	4	4	5	5	5	5	5
TF (JS14)	30	30	40	40	50	50	52	70	70
W (±1,4)	13	13	18	18	19	23	23	30	30
Weight g.	20	20	40	40	85	85	100	150	150

Overall dimensions and technical information are provided solely for informative purposes and may be modified without notice

Rear eye

Ordering code
1200.Ø.03 (1 piece)

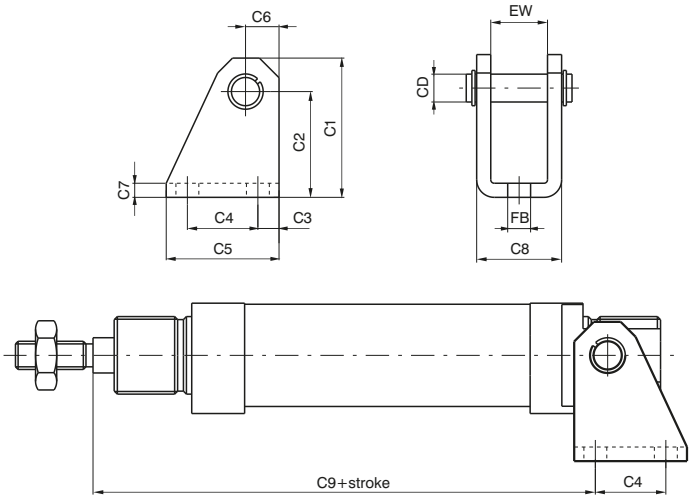

Use with the rear end cover to mount the cylinder either parallel or at a right-angle to the mounting plane. This allows the cylinder to oscillate and self-align with the linked element to the rod. This is necessary when the rod may be subject to lateral during travel.

Attention: the dimensions of microbore cylinders with threaded end covers (*) increase by 10mm for equipped with magnetic piston and spring return, and by 9mm for microbore cylinders with 10mm BORE magnetic piston.

Bore	8	10	12	16	20	25	32	40	50
CD	4	4	6	6	8	8	12	14	14
C1	28,5	28,5	33,5	33,5	39,5	39,5	44,5	53,5	53,5
C2 (±0,3)	24	24	27	27	30	30	33	40	40
C3	3,5	3,5	5	5	6	6	7	10	10
C4	12,5	12,5	15	15	20	20	24	28	28
C5	20	20	25	25	32	32	38	45	45
C6	4,5	4,5	6,5	6,5	9,5	9,5	11,5	13,5	13,5
C7	2,5	2,5	3	3	4	4	4	4	4
C8	13	13	18	18	24	24	34	38	38
C9 (±0,4) *	63	63	73,5	80,5	91,5	100,5	100,5	119,5	122,5
EW	8,1	8,1	12,1	12,1	16,1	16,1	26,1	30,1	30,1
FB (H13)	4,5	4,5	5,5	5,5	6,5	6,5	6,5	8,5	8,5
Weight g.	20	20	35	35	75	75	135	180	180

Cylinder rod forks

Ordering code
1200.Ø.04 * (with pin) **1200.Ø.04/1** (with pin) *Available from bore Ø12

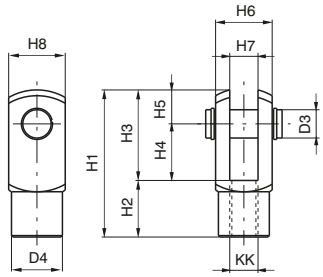

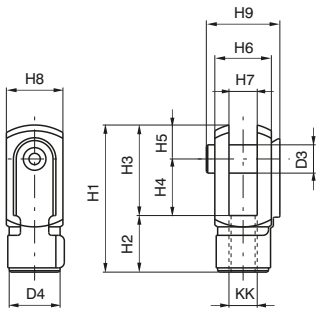

Forks:
Similar to hinge 03, mounted on the rod thread, assures a regular operation even in the presence of significant forces to the linked element. Made of zinc plated steel.
Nut:
Used to fasten flanges or feet to the endcaps of the microcylinder. The nuts are mounted on BORE that go from 8 to 25, the lock nuts on 32, 40 and 50. Both are supplied (one piece) with the microbore cylinders.

Nut or lock nut for the endcaps

Ordering code
1200.Ø.05

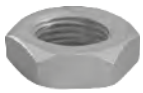

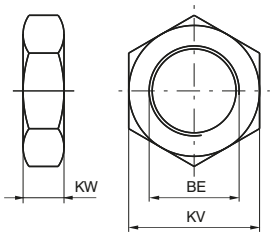

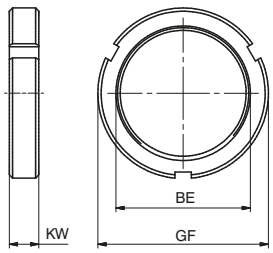

Bore	D3	D4	H1	H2	H3	H4	H5	H6	H7 (B12)	H8	H9	KK	BE	KV	GF	KW	Forks weight g.	Nuts weight g.
8	4	8	21	8	13	8	5	8	4	10	11	M4x0,7	M12x1,25	17	-	5,5	12	7
10	4	8	21	8	13	8	5	8	4	10	11	M4x0,7	M12x1,25	17	-	5,5	12	7
12	6	10	31	12	19	12	7	12	6	12	18	M6x1	M16x1,5	22	-	6	20	16
16	6	10	31	12	19	12	7	12	6	12	18	M6x1	M16x1,5	22	-	6	20	16
20	8	14	42	16	26	16	10	16	8	16	23	M8x1,25	M22x1,5	30	-	7	45	25
25	10	18	52	20	32	20	12	20	10	20	27	M10x1,25	M22x1,5	30	-	7	90	25
32	10	18	52	20	32	20	12	20	10	20	27	M10x1,25	M30x1,5	-	42	8	90	42
40	12	20	62	24	38	24	14	24	12	24	32	M12x1,75	M40x1,5	-	52	9	145	60
50	12	20	62	24	38	24	14	24	12	24	32	M12x1,75	M40x1,5	-	52	9	145	60

Foot

Ordering code
1200.Ø.01X (1 piece)

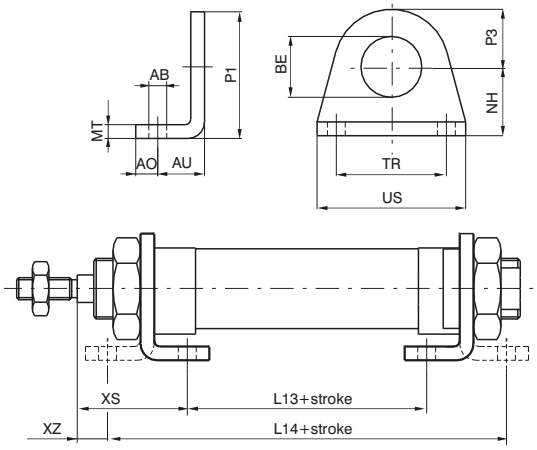

Used to mount the cylinder on the mounting plane with the rod parallel to said plane. Use one for short strokes and two for long strokes.
It is made stamped stainless steel AISI 304. Attached to the end caps by means of nuts (or lock nuts) 05X.

Bore	16	20	25	32
AB (H13)	5,5	6,5	6,5	6,5
AO	6	8	8	8
AU	14	17	17	17
BE	16	22	22	30
L13 (±1)	36	44	44	45
L14 (±1)	84	102	102	103
MT	4	5	5	5
NH (±0,3)	20	25	25	28
P1	33	45	45	50
P3	13	20	20	22
TR (Js14)	32	40	40	52
US	42	54	54	66
XS (±1,4)	32	36	40	40
XZ (±1,4)	8	7	11	11
Weight g	45	90	90	110

Flange

Ordering code
1200.Ø.02X

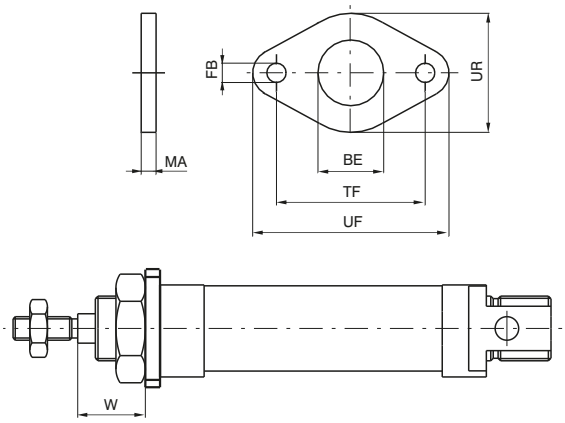

Use to mount the microbore cylinder at a right angle to the mounting plane. Attached to the front (or rear) endcap by a nut (or lock nut)05X. Made of stainless steel AISI 304.

Bore	16	20	25	32
BE	16	22	22	30
FB (H13)	5,5	6,5	6,5	6,5
UF	53	66	66	68
UR	30	40	40	50
MA	4	5	5	5
TF (JS14)	40	50	50	52
W (±1,4)	18	19	23	23
Weight g	40	85	85	100

Overall dimensions and technical information are provided solely for informative purposes and may be modified without notice

Rear eye

Ordering code
1200.Ø.03X (1 piece)

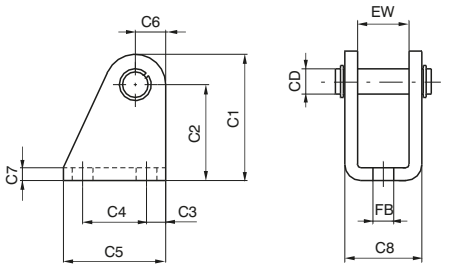

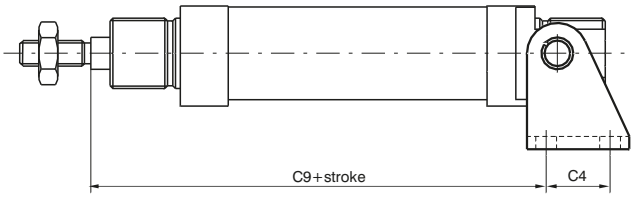

Used to mount by using the rear end cover to mount either parallel or at a right angle to the mounting plane. Allows the cylinder to oscillate and self-align with the linked element to the rod. Necessary to use when the rod may be subject to lateral forces during travel.
Made of stamped stainless steel AISI 304.

Bore	16	20	25	32
CD	6	8	8	12
C1	33,5	39,5	39,5	44,5
C2 (±0,3)	27	30	30	33
C3	5	6	6	7
C4	15	20	20	24
C5	25	32	32	38
C6	6,5	9,5	9,5	11,5
C7	3	4	4	4
C8	18	24	24	34
C9 (±0,4)	80,5	91,5	100,5	100,5
EW	12,1	16,1	16,1	26,1
FB (H13)	5,5	6,5	6,5	6,5
Weight g.	35	75	75	135

Cylinder rod fork / Nut or lock nut for the endcaps

Ordering code
1200.Ø.04X (with pin)
1200.Ø.05X (1 piece)

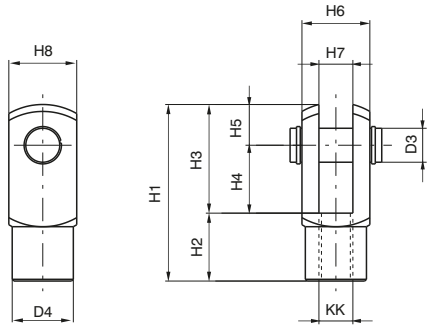

Fork:
Similar to hinge 03X, mounted on the rod thread, assures a regular operation even in the presence of significant forces to the linked element. Made of stainless steel AISI 304.
Nut:
Used to fasten flanges or feet to the endcaps of the microbore cylinder. The nuts are mounted on bores that go from 16 to 25, the lock nuts on 32. Both are supplied (one piece) with the microbore cylinders.

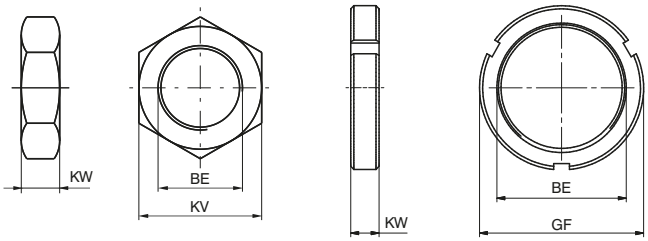

Bore	Weight g fork	Weight g nut	D3	D4	H1	H2	H3	H4	H5	H6	H7 (B12)	H8	KK	BE	KV	GF	KW
16	20	16	6	10	31	12	19	12	7	12	6	12	M6X1	M16X1,5	22	-	6
20	45	25	8	14	42	16	26	16	10	16	8	16	M8X1,25	M22X1,5	30	-	7
25	90	25	10	18	52	20	32	20	12	20	10	20	M10X1,25	M22X1,5	30	-	7
32	90	42	10	18	52	20	32	20	12	20	10	20	M10X1,25	M30X1,5	-	42	8

Series 1303-1304-1305-1306-1307-1308

General

They conform to CNOMO standards, fully complying with CETOP and ISO standards, with mounted fixing devices 32 to 100.

Construction characteristic

End caps	solid aluminium bar up to Ø100, alloy aluminium from Ø125 to Ø200
Rod	C43 chromed steel, by thickness or stainless steel
Barrel	oxidised aluminium
Tie rods	steel with rolled threads
Cushion bearings	aluminium
Rod-guide bushing	brass (Ø32, 40, 50) in aluminium with self-lubricating bearings in sinterized bronze for the remaining BOREs
Piston	aluminium lathed from bar
Seals	Standard: NBR Oil resistant rubber, PUR Piston rod seals (FPM seals available upon request)

Operational characteristics

Fluid	filtered and lubricated air - hydraulic oil (with special bushing)
Pressure	max. 12 bar (air) - 20 bar (oil)
Operating temperature	-5 °C - +70 °C with 1303-1308 standard seals -5 °C - +80 °C with FPM seals for 1306-1308 series (magnetic piston) -5 °C - +150 °C with FPM seals for 1303-1305 series (non magnetic piston)
Cushioning length	Ø 32 - 40 - 50 - 63 - 80 - 100 - 125 - 160 - 200 mm 20 - 20 - 22 - 24 - 24 - 25 - 27 - 35 - 35

Please follow the suggestions below to ensure a long life for these cylinders:
- use clean and lubricated air
- correct alignment during assembly with regard to the applied load so as to avoid radial components or bending the rod.
- avoid high speeds together with long strokes and heavy loads: this would produce kinetic energy which the cylinder cannot absorb, especially if used as a limit stop (in this case use mechanical stop device)
- evaluate the environmental characteristics of cylinder used (high temperature, hard atmosphere, dust, humidity etc.)

Please note: air must be dried for applications with lower temperature.
Use hydraulic oils H class (ISO VG32) for correct continued lubrication.
Our Technical Department will be glad to help.

Standard strokes

Double acting version
From 0 to 150 every 25 mm; from 150 to 500 every 50 mm; from 500 to 1000 every 100 mm (for all bores)
On request are available strokes up to 2800 mm

Single acting version
up to stroke 50 mm

Minimum and maximum springs load for single acting version

Bore	Ø32	Ø40 - Ø50	Ø63	Ø80 - Ø100
Min. load (N)	20	25	50	100
Max. load (N)	55	80	115	200

Overall dimensions and technical information are provided solely for informative purposes and may be modified without notice

Basic version

Ordering code
Non magnetic piston
1303.Ø.stroke.01A (CNOMO) **1304.Ø.stroke.01A** (CETOP) **1305.Ø.stroke.01A** (ISO)
Magnetic piston
1306.Ø.stroke.01A (CNOMO) **1307.Ø.stroke.01A** (CETOP) **1308.Ø.stroke.01A** (ISO)

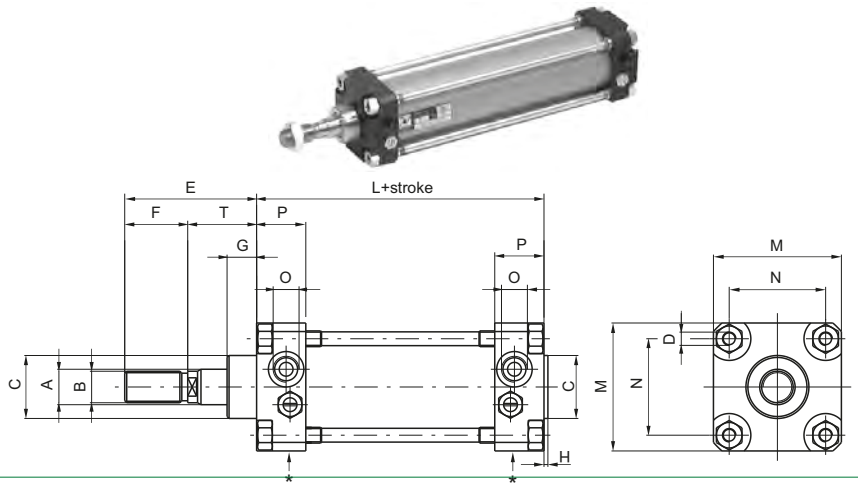

Through rod cylinder version

Ordering code
Non magnetic piston
1303.Ø.stroke.02A (CNOMO) **1304.Ø.stroke.02A** (CETOP) **1305.Ø.stroke.02A** (ISO)
Magnetic piston
1306.Ø.stroke.02A (CNOMO) **1307.Ø.stroke.02A** (CETOP) **1308.Ø.stroke.02A** (ISO)

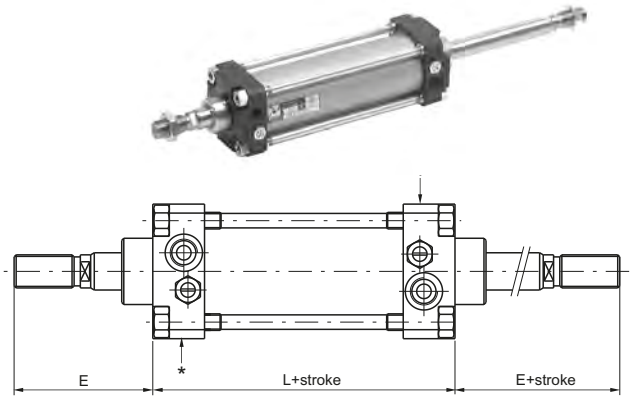

Tandem push with a common rod

Ordering code
Non magnetic piston
1303.Ø.stroke.H (CNOMO) **1304.Ø.stroke.H** (CETOP) **1305.Ø.stroke.H** (ISO)
Magnetic piston
1306.Ø.stroke.H (CNOMO) **1307.Ø.stroke.H** (CETOP) **1308.Ø.stroke.H** (ISO)

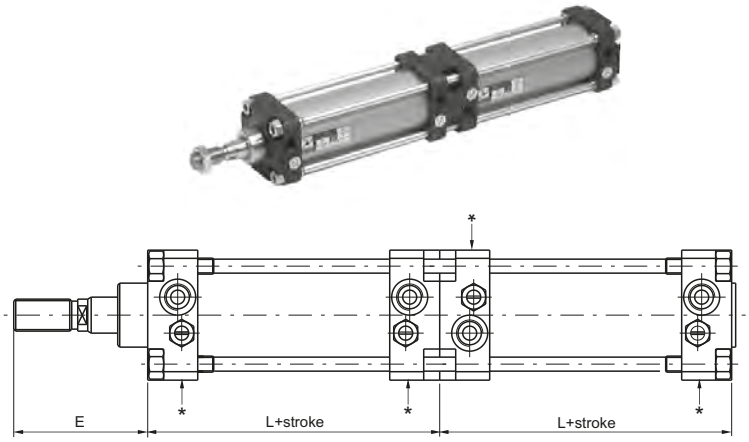

Tandem push with independent rods

Ordering code
Non magnetic piston
1303.Ø.stroke.stroke1.N (CNOMO) **1304.Ø.stroke.stroke1.N** (CETOP) **1305.Ø.stroke.stroke1.N** (ISO)
Magnetic piston
1306.Ø.stroke.stroke1.N (CNOMO) **1307.Ø.stroke.stroke1.N** (CETOP) **1308.Ø.stroke.stroke1.N** (ISO)

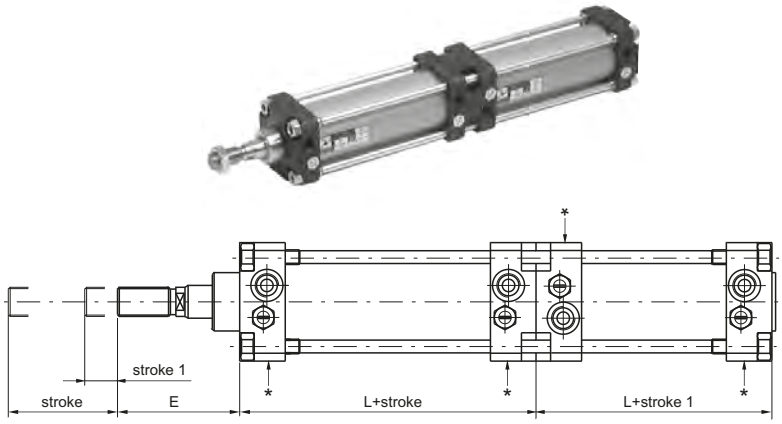

Opposed tandem with common rods

Ordering code
Non magnetic piston
1303.Ø.stroke.stroke1.R (CNOMO) **1304.Ø.stroke.stroke1.R** (CETOP) **1305.Ø.stroke.stroke1.R** (ISO)
Magnetic piston
1306.Ø.stroke.stroke1.R (CNOMO) **1307.Ø.stroke.stroke1.R** (CETOP) **1308.Ø.stroke.stroke1.R** (ISO)

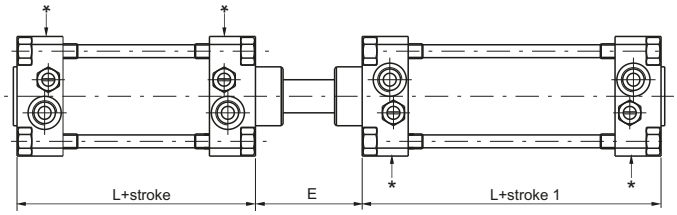

Tandem with opposed rods

Ordering code
Non magnetic piston
1303.Ø.stroke.stroke1.U (CNOMO) **1304.Ø.stroke.stroke1.U** (CETOP) **1305.Ø.stroke.stroke1.U** (ISO)
Magnetic piston
1306.Ø.stroke.stroke1.U (CNOMO) **1307.Ø.stroke.stroke1.U** (CETOP) **1308.Ø.stroke.stroke1.U** (ISO)

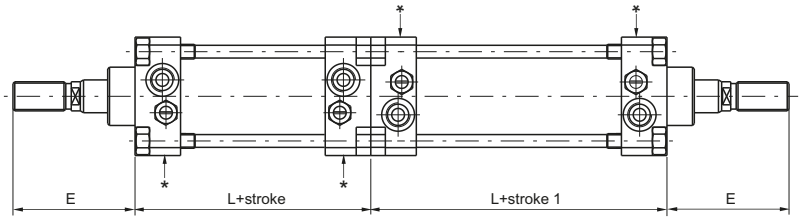

Variants
Add "X" to the cylinder code to order cylinders with STAINLESS STEEL rods. Example:**1303.32.250.01AX.**
Add "V" to the cylinder code to order cylinders with FPM seals. Example:**1303.32.250.01AV.**
Add "MA" to the cylinder code to order cylinders single acting front spring, with strokes not superior to 50. Example:**1303.32.50.01AMA.**
Add "MP" to the cylinder code to order cylinders single acting rear spring, with strokes not superior to 50. Example:**1303.50.25.01AMP.**
Note: Cushion adjustment (for Ø 32, Ø 40, Ø 125, Ø 160 and Ø 200) is on the side indicated by ✶ (see drawings).

Table of dimensions

Bore		32	40	50	63	80	100	125	160	200
A (f7)		12	18	18	22	22	30	30	40	40
B - CNOMO (6g)		M10x1,5	M16x1,5	M16x1,5	M20x1,5	M20x1,5	M27x2	M27x2	M36x2	M36x2
B - CETOP (6g)		M10x1,25	M12x1,25	M16x1,5	M16x1,5	M20x1,5	M20x1,5	M24x2	M36x2	M36x2
B - ISO (6g)		M10x1,25	M12x1,25	M16x1,5	M16x1,5	M20x1,5	M20x1,5	M27x2	M36x2	M36x2
C (d11)		25	32	32	45	45	55	55	65	65
H		2,5	2	2	2	2	2	3	3	3
D		M6	M6	M8	M8	M10	M10	M12	M16	M16
E - CNOMO		45	70	70	85	85	110	110	135	135
E - CETOP		44	52	67	67	82	87	109	152	162
E - ISO		46	52	67	67	82	87	115	152	162
F - CNOMO		20	36	36	46	46	63	63	85	85
F - CETOP		20	24	32	32	40	40	48	72	72
F - ISO		22	24	32	32	40	40	54	72	72
G		15	15	15	20	20	20	20	25	25
M		45	52	65	75	95	115	140	180	220
N		33	40	49	59	75	90	110	140	175
O		G 1/8"	G 1/4"	G 1/4"	G 3/8"	G 3/8"	G 1/2"	G 1/2"	G 3/4"	G 3/4"
P		16	23	25	31	31	35	36	45	45
T - CNOMO		25	34	34	39	39	47	47	50	50
T - CETOP-ISO		24	28	35	35	42	47	61	80	90
L - CNOMO (±1)		80	110	110	125	125	145	145	180	180
L - CETOP-ISO (±1)		98	110	110	125	136	145	168	180	190
STROKE TOLERANCE: + 2 mm.										
WEIGHT IN g OF THE CYLINDERS WITH VARIOUS BARRELS (BASIC VERSION)										
Bore		32	40	50	63	80	100	125	160	200
Aluminium	stroke 0	580	1010	1350	2110	3350	5400	7450	13300	18300
	every 10 mm	24	38	47	63	75	117	130	235	250
FOR CYLINDERS IN TANDEM THE WEIGHT IS APPROXIMATELY DOUBLE										

Overall dimensions and technical information are provided solely for informative purposes and may be modified without notice

Sensor brackets codes - 1500._, RS._, HS._

Ordering code	1306.A				1306.B			1306.C	
Bore	Ø32	Ø40	Ø50	Ø63	Ø80	Ø100	Ø125	Ø160	Ø200
L	59	65	76	87	103	121	144	179	215

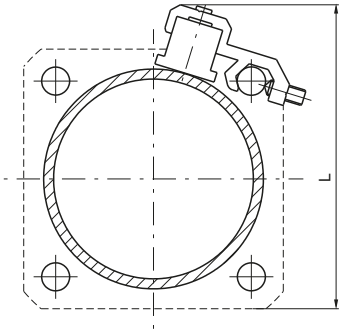

Sensor for microbore cylinders

For technical characteristics and ordering codes see Chapter 6 (magnetic sensors)

This accessory allows valves or solenoid valves to mount on the side of the cylinder. Support should be anchored to the tie rods and on it either a threaded distributor can be mounted or a base upon which an ISO distributor can be mounted. Once installed the connections must be done with fittings and pipes. All of the threaded holes on the support plate are dedicated to different valves series as per attached drawing.

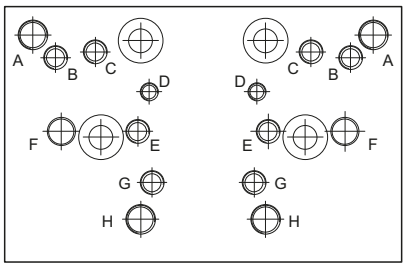

Fixing holes for valves series:

A = 414/2
B = 824
C = 828, T488, 488, 484
D = 2400
E = 2600
F = Bases for ISO distributors
G = 858/2
H = T424

Support

Ordering code
1306.15 (Ø32 ... Ø100)

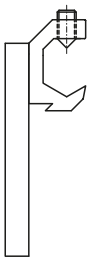

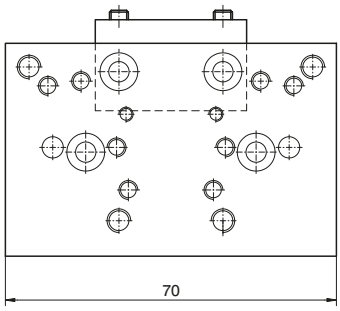

Bases for ISO solenoid valves

Ordering code	
1320.21	bases for ISO 1 solenoid valves
1320.22	bases for ISO 2 solenoid valves

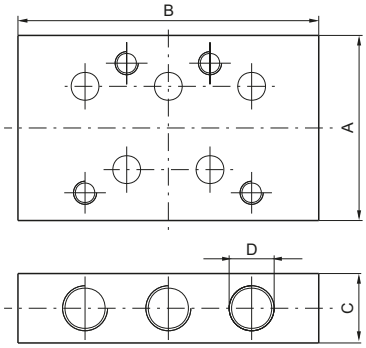

	Dimensions			
	A	B	C	D
bases for ISO 1 solenoid valves	40	75	15	G 1/8"
bases for ISO 2 solenoid valves	50	95	20	G 1/4"

Front and rear flanges

Ordering code
1303.Ø.03F (CNOMO) **1304.Ø.03F** (CETOP - ISO)

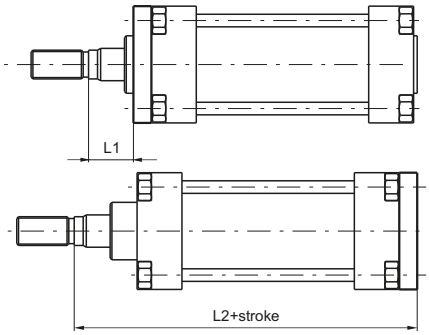

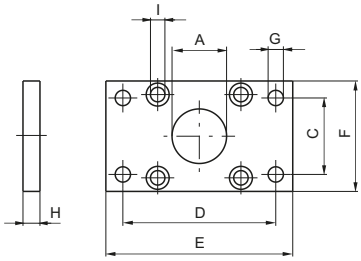

Plate which allows anchorage of the cylinder at a right angle to the plane. It is made of zinc-plated extruded steel.

Bore	32	40	50	63	80	100	125	160	200
A (H11)	25	32	32	45	45	55	55	65	65
C - CNOMO (JS 14)	33	40	49	59	75	90	110	140	175
C - CETOP ISO (JS 14)	32	36	45	50	63	75	90	115	135
D - CNOMO (JS 14)	68	78	94	104	130	150	180	228	268
D - CETOP - ISO (JS 14)	64	72	90	100	126	150	180	230	270
E	80	90	110	120	150	170	205	260	300
F	45	52	65	75	95	115	140	180	220
G - CNOMO (H13)	9	9	11	11	14	14	18	22	22
G - CETOP - ISO (H13)	7	9	9	9	12	14	16	18	22
H (JS 14)	8	8	10	10	12	12	16	20	20
I	6,5	6,5	9	9	10,5	10,5	13,5	16,5	16,5
L1 - CNOMO	17	26	24	29	27	35	31	30	30
L1 - CETOP - ISO	16	20	25	25	30	35	45	60	70
L2 - CNOMO	113	152	154	174	176	204	208	250	250
L2 - CETOP - ISO	130	145	155	170	190	205	245	280	300
Weight g	165	200	540	1060	1460	1510	3100	6400	9500

Standard feet

Ordering code
1303.Ø.05F (CNOMO) (1 piece) **1304.Ø.05F** (CETOP - ISO) (1 piece)

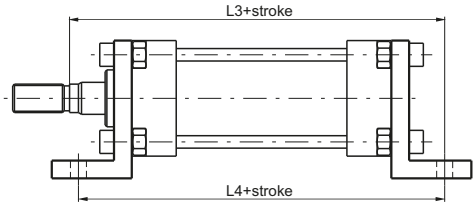

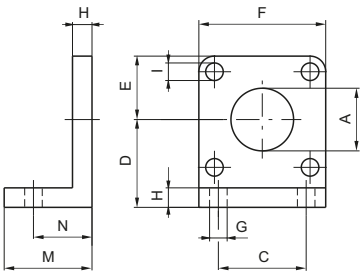

Elements used to anchor the cylinder parallel to the mounting plane. They are made of cast aluminium, painted black.

Bore	32	40	50	63	80	100	125	160	200
A (H11)	25	32	32	45	45	55	55	65	65
C - CNOMO (JS 14)	28	36	45	55	70	90	100	130	170
C - CETOP ISO (JS 14)	32	36	45	50	63	75	90	115	135
D - CNOMO (JS 15)	32	36	45	50	63	73	91	115	135
D - CETOP - ISO (JS 15)	32	36	45	50	63	71	90	115	135
E	22	26	32	37	47	57	70	90	110
F	45	52	65	75	95	115	140	180	220
G - CNOMO (H14)	9	9	11	11	14	14	18	22	22
G - CETOP (H14)	7	9	9	9	12	14	16	18	22
G - ISO (H14)	7	9	9	9	12	14	16	18	22
H	8	8	10	10	12	12	16	20	20
I	7	7	9	9	11	11	13	17	17
M	35	35	45	45	55	55	68	82	91
N - CNOMO (±0,2)	27	27	35	35	43	43	52	62	62
N - CETOP - ISO (±0,2)	22	25,5	30	30	37	37,5	41	60	65
L3 - CNOMO	132	171	179	199	207	235	244	292	292
L3 - CETOP - ISO	144	163	175	190	215	230	270	320	345
L4 - CNOMO	134	164	180	195	211	231	249	304	304
L4 - CETOP - ISO	142	161	170	185	210	220	250	300	320
Weight g	55	70	150	175	260	550	920	2200	3200

Overall dimensions and technical information are provided solely for informative purposes and may be modified without notice

Short sheet metal feet

Ordering code
1303.Ø.05/1F (CNOMO - CETOP - ISO) (1 piece)

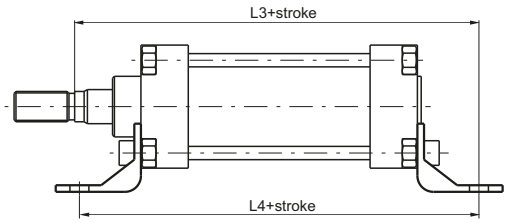

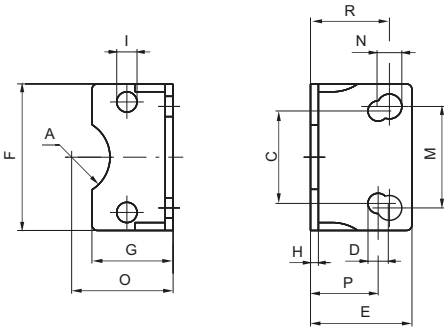

Elements used to anchor the cylinder parallel to the mounting plane. They are made of stamped and pierced sheet metal and painted in black. The mounting holes allow use with CNOMO, CETOP and ISO. Available up to 100 mm bore

Bore	32	40	50	63	80	100
A	13	17	17	23,5	23,5	-
C - CETOP - ISO (JS 14)	32	36	45	50	63	75
D - CETOP - ISO (JS 15)	7	9	9	9	12	14
E	35	36	45	45	55	56
F	45	52	65	75	95	115
G	30	30	36	35	45	44
H	3,5	3,5	3,5	4,5	5	5
I	7	7	9	9	11	11
M - CNOMO (JS 14)	28	36	45	55	70	90
N - CNOMO (JS 15)	9	9	11	11	13	13
O - CNOMO (JS 15)	32	36	45	50	63	73
O - CETOP - ISO (JS 15)	32	36	45	50	63	71
P - CETOP - ISO (±0,2)	22	25,5	30	30	37	37,5
R - CNOMO (±0,2)	27	27	35	35	43	43
L3 - CNOMO	132	171	179	199	207	235
L3 - CETOP - ISO	144	163	175	190	215	230
L4 - CNOMO	134	164	180	195	211	231
L4 - CETOP - ISO	142	161	170	185	210	220
Weight g	58	70	118	184	305	385

Large internal and external feet

Ordering code
Internal **1303.Ø.06F** (CNOMO) (1 piece) (May be used with CETOP-ISO cylinders but are not specified in the standards) *External* **1303.Ø.07F** (CNOMO) (1 piece)

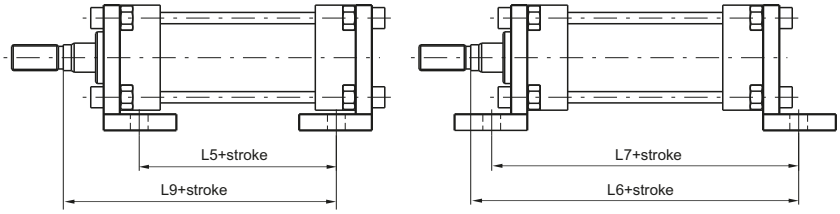

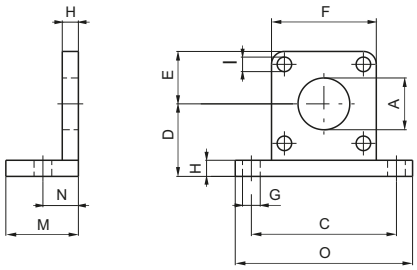

Elements used to anchor the cylinder parallel to the mounting plane. They are made of aluminium alloy and painted black.

Bore	32	40	50	63	80	100	125	160	200
A (H11)	25	32	32	45	45	55	55	65	65
C (JS 14)	65	72	90	100	126	148	180	230	270
D (JS 15)	32	36	45	50	63	73	91	115	135
E	22	26	32	37	47	57	70	90	110
F	45	52	65	75	95	115	140	180	220
G (H14)	9	9	11	11	14	14	18	22	22
H	8	8	10	10	12	12	16	20	20
I	7	7	9	9	11	11	13	17	17
M	35	35	45	45	55	55	67	80	80
N (±0,2)	18	18	22	22	28	28	32	40	40
O	82	90	110	120	155	180	215	275	315
L5 - CNOMO	60	90	86	101	93	113	113	140	140
L5 - CETOP - ISO	78	90	86	101	104	113	136	140	150
L6 - CNOMO	123	162	166	186	192	220	224	270	270
L6 - CETOP - ISO	141	162	166	186	203	220	247	270	280
L7 - CNOMO	116	146	154	169	181	201	209	260	260
L7 - CETOP - ISO	134	146	154	169	192	201	232	260	270
L9 - CNOMO	95	134	132	152	148	176	176	210	210
L9 - CETOP - ISO	112	128	133	148	162	176	213	240	250
Weight g	80	90	190	210	460	600	1080	2400	3100

Front clevis

Ordering code
Front **1303.Ø.08F** (CNOMO) **1304.Ø.08F** (CETOP - ISO)

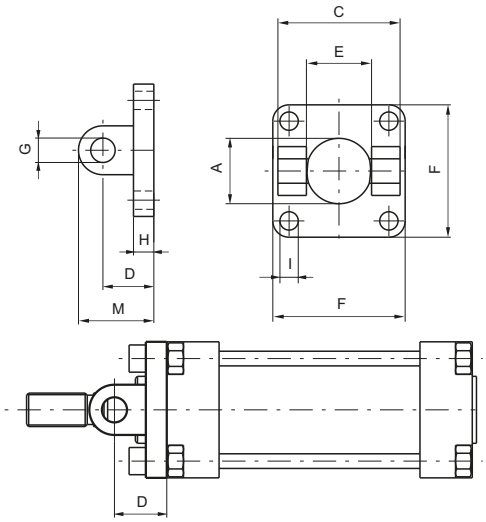

This type of mounting allows anchorage of the cylinder both parallel and at a right angle to the plane; the cylinder rod can oscillate and self-align as necessary. It is made of aluminium alloy and painted black.

Bore	32	40	50	63	80	100	125	160	200
A	25	32	32	45	45	55	55	65	65
C - CNOMO (H1)	45	52	65	75	95	115	140	180	220
C - CETOP - ISO (H14)	45	52	60	70	90	110	130	170	170
D - CNOMO (±0,2)	18	24	26	30	32	37	41	55	55
D - CETOP (±0,2)	20	22	25	30	32	37	46	55	55
E - CNOMO (H14)	26	33	33	47	47	57	57	72	72
E - CETOP (H14)	26	28	32	40	50	60	70	90	90
F	45	52	65	75	95	115	140	180	220
G - CNOMO (H9)	8	12	12	16	16	20	20	25	25
G - CETOP - ISO (H9)	10	12	12	16	16	20	25	30	30
H	8	8	10	10	12	12	16	19	19
I	7	7	9	9	11	11	13	17	17
M - CNOMO	26	36	38	46	48	57	61	80	80
M - CETOP - ISO	30	35	37	46	48	57	71	85	85
Weight g	55	60	120	145	325	510	900	2080	3100

Rear clevis complete with pin

Ordering code
Rear **1303.Ø.09F** (CNOMO) **1304.Ø.09F** (CETOP - ISO)

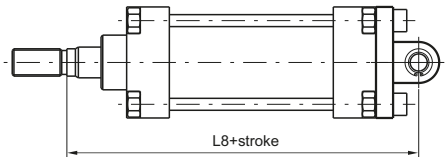

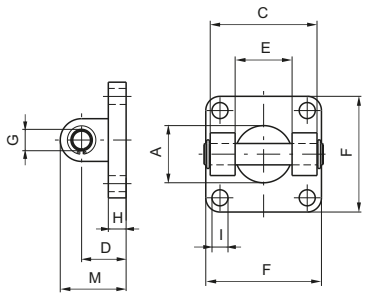

This type of mounting allows anchorage of the cylinder both parallel and at a right angle to the plane; the cylinder rod can oscillate and self-align as necessary. It is made of aluminium alloy and painted black.

Bore	32	40	50	63	80	100	125	160	200
A	25	32	32	45	45	55	55	65	65
C - CNOMO (H1)	45	52	65	75	95	115	140	180	220
C - CETOP - ISO (H14)	45	52	60	70	90	110	130	170	170
D - CNOMO (±0,2)	18	24	26	30	32	37	41	55	55
D - CETOP - ISO (±0,2)	20	22	25	30	32	37	46	55	55
E - CNOMO (H14)	26	33	33	47	47	57	57	72	72
E - CETOP (H14)	26	28	32	40	50	60	70	90	90
F	45	52	65	75	95	115	140	180	220
G - CNOMO (H9)	8	12	12	16	16	20	20	25	25
G - CETOP - ISO (H9)	10	12	12	16	16	20	25	30	30
H	8	8	10	10	12	12	16	19	19
I	7	7	9	9	11	11	13	17	17
M - CNOMO	26	36	38	46	48	57	61	80	80
M - CETOP - ISO	30	35	37	46	48	57	71	85	85
L8 - CNOMO	123	168	170	194	196	229	233	285	285
L8 - CETOP - ISO	142	160	170	190	210	230	275	315	335
Weight g	75	110	190	280	490	820	1270	2800	3900

Overall dimensions and technical information are provided solely for informative purposes and may be modified without notice

Rear male clevis

Ordering code
1304.Ø.09/1F (For CETOP-ISO cylinders May be used with CNOMO cylinders but is not specified in the standards)

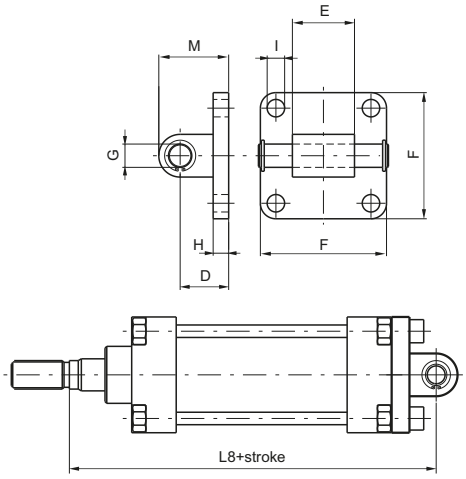

Similar to 09 clevis except for the connection, which is male rather than female. It can also be used as a counter clevis for type 10 (only CETOP - ISO). Allows mounting of cylinder at right angle to the plane of the cylinder rod.

Bore	32	40	50	63	80	100	125	160	200
D (±0,2)	20	22	25	30	32	37	46	55	55
E ($^{-0,2}_{-0,6}$)	26	28	32	40	50	60	70	90	90
F	45	52	65	75	95	115	140	180	220
G (H 9)	10	12	12	16	16	20	25	30	30
H	8	8	8	10	12	12	16	20	20
I	7	7	9	9	11	11	14	18	18
M	30	35	36	45	47	57	71	80	80
L8 - CNOMO	125	166	169	194	196	229	233	285	285
L8 - CETOP - ISO	142	160	170	190	210	230	275	315	335
Weight g	50	80	110	185	325	460	1300	2850	3980

Rear clevis bracket

Ordering code
1303.Ø.10F (CNOMO) (May be used with CETOP - ISO cylinders but is not specified in the standard)

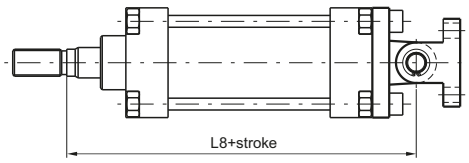

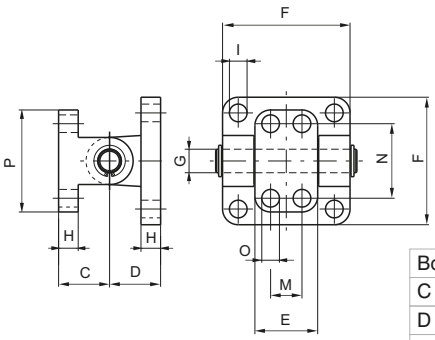

Mounting consists of clevis 09 and counter clevis. Used to mount cylinders at a right angle to the plane to which the counter clevis is attached. Allows self-alignment of the cylinder rod under load with an oscillation of ± 60 degrees.

Bore	32	40	50	63	80	100	125	160	200
C (±0,2)	18	26	26	34	34	41	41	55	55
D (±0,2)	18	24	26	30	32	37	41	55	55
E	25	32	32	46	46	56	56	71	71
F	45	52	65	75	95	115	140	180	220
G (H 9)	8	12	12	16	16	20	20	25	25
H	8	10	10	12	12	16	16	20	20
I	7	7	9	9	11	11	13	17	17
M (JS 14)	-	16	16	25	25	32	32	43	43
N (JS 14)	28	38	38	54	54	90	90	150	150
O (H 13)	7	9	9	11	11	14	14	18	18
P	40	52	52	75	75	115	115	180	180
L8 - CNOMO	123	168	170	194	196	229	233	285	285
L8 - CETOP - ISO	140	162	171	190	210	229	270	315	335
Weight g	90	165	240	470	665	1190	1660	3700	4700

Trunnion with support bracket

Ordering code
1303.Ø.11F (CNOMO) (May be used with CETOP - ISO cylinders but is not specified in the standards)

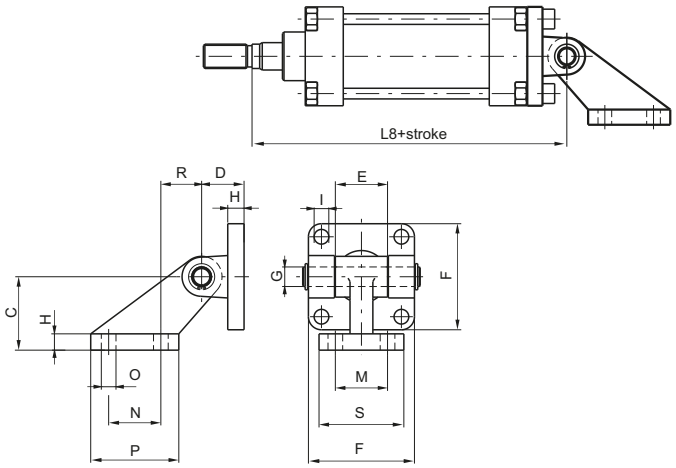

Mounting consists of clevis 09 and right angle counter clevis. Used to mount cylinders parallel to the plane to which the counterclevis is attached. Allows self-alignment of the cylinder rod under load with an oscillation up to 90 degrees from the mounting plane.

Bore	32	40	50	63	80	100	125	160	200
C (JS 15)	32	45	45	63	63	90	90	140	140
D (±0,2)	18	24	26	30	32	37	41	55	55
E	25	32	32	46	46	56	56	71	71
F	45	52	65	75	95	115	140	180	220
G (H9)	8	12	12	16	16	20	20	25	25
H	8	10	10	12	12	16	16	20	20
I	7	7	9	9	11	11	13	17	17
M (JS14)	25	32	32	40	40	50	50	63	63
N (Js14)	20	32	32	50	50	70	70	110	110
O (JS 13)	7	9	9	11	11	14	14	18	18
P	37	54	54	75	75	102	102	154	154
R	18	25	25	32	32	40	40	50	50
S	41	51	51	62	62	80	80	110	110
L8 - CNOMO	123	168	170	194	196	229	233	285	285
L8 - CETOP - ISO	140	162	171	190	210	229	270	315	335
Weight g	125	250	325	600	800	1570	2100	4600	5700

Intermediate trunnion

Ordering code
1300.Ø.12F

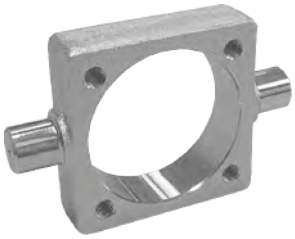

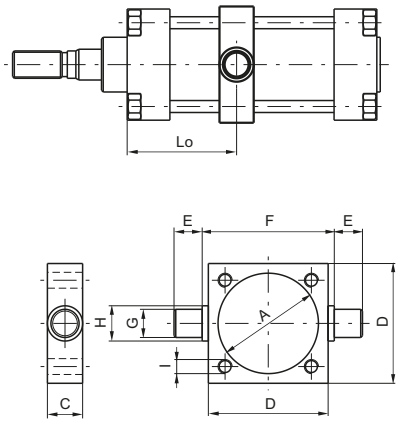

Clevis to be mounted between the endcaps of the cylinder allowing rotation at any point along the barrel. One piece construction from zinc-plated stamped steel. Can be mounted in fixed position or attached to adjustable tie rods.
NOTE: Lo max means at stroke 0.

Bore	32	40	50	63	80	100	125	160	200
A	37	46	56	69	87	107	133	170	211
C	15	20	20	25	25	30	32	40	40
D	46	59	69	84	102	125	155	190	240
E (h 14)	12	16	16	20	20	25	25	32	32
F (h 14)	50	63	73	90	108	131	160	200	250
G (e 9)	12	16	16	20	20	25	25	32	32
H	15	20	20	25	25	30	30	40	40
I	M6	M6	M8	M8	M10	M10	M12	M16	M16
Lo min.	32	35	40	47	53	55	61	78	79
Lo max. + stroke - CNOMO	48	75	70	80	72	90	84	103	102
Lo max. + stroke - CETOP - ISO	67	75	70	80	84	90	107	103	112
Weight g	130	310	370	700	900	1590	2600	4300	7500

Overall dimensions and technical information are provided solely for informative purposes and may be modified without notice

Fork with pin

Ordering code
1300.Ø.13F (CNOMO) **1301.Ø.13F** (CETOP) **1302.Ø.13F** (ISO)

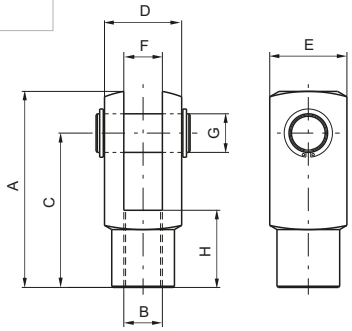

Male fork

Ordering code
1300.Ø.14F (only for CNOMO cylinders)

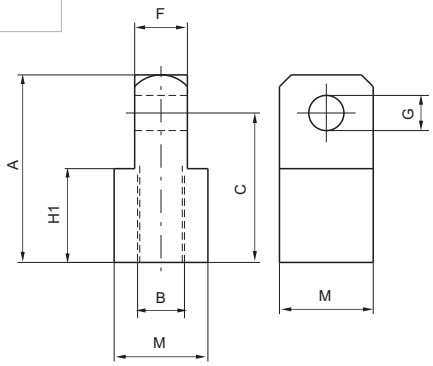

Fork with clips

Ordering code
1300.Ø.13/1F (CNOMO) **1301.Ø.13/1F** (CETOP) **1302.Ø.13/1F** (ISO)

from Ø32 to Ø100 mm

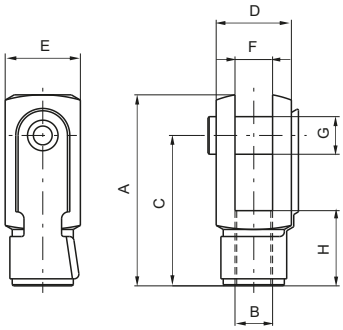

Rod lock nut

Ordering code
1300.Ø.18F (CNOMO) **1301.Ø.18F** (CETOP) **1302.Ø.18F** (ISO)

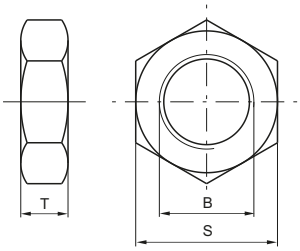

Bore		32	40	50	63	80	100	125	160	200
A - CNOMO		45	64	64	80	80	105	105	140	140
A - CETOP - ISO		51	62	82	82	105	105	132/148	188	188
B - CNOMO (6H)		M10x1,5	M16x1,5	M16x1,5	M20x1,5	M20x1,5	M27x2	M27x2	M36x2	M36x2
B - CETOP (6H)		M10x1,25	M12x1,25	M16x1,5	M16x1,5	M20x1,5	M20x1,5	M24x2	M36x2	M36x2
B - ISO (6 H)		M10x1,25	M12x1,25	M16x1,5	M16x1,5	M20x1,5	M20x1,5	M27x2	M36x2	M36x2
C - CNOMO		36	51	51	63	63	85	85	115	115
C - CETOP - ISO		40	48	64	65	80	80	100/100	144	144
D - CNOMO		22	36	36	45	45	63	63	80	80
D - CETOP - ISO		20	24	32	32	40	40	50/55	70	70
E - CNOMO		22	26	26	34	34	42	42	50	50
E - CETOP - ISO		20	24	32	32	40	40	50/55	70	70
F - CNOMO (H 14)		11	18	18	22	22	30	30	40	40
F - CETOP - ISO (B 12)		10	12	16	16	20	20	25/30	35	35
G - CNOMO (H 9)		8	12	12	16	16	20	20	25	25
G - CETOP - ISO (H 9)		10	12	16	16	20	20	25/30	35	35
H - CNOMO		20	26	26	30	30	45	45	75	75
H - CETOP - ISO		20	24	32	32	40	40	50/56	72	72
H1 - CNOMO		20	32	32	40	40	55	55	75	75
M		22	32	32	36	36	45	45	70	70
S - CNOMO		17	24	24	30	30	41	41	55	55
S - CETOP		17	19	24	24	30	30	36	55	55
S - ISO		17	19	24	24	30	30	41	55	55
T - CNOMO		6	8	8	9	9	12	12	18	18
T - CETOP		6	7	8	8	9	9	10	18	18
T - ISO		6	7	8	8	9	9	12	18	18
Weight g	Fork	90	150	350	350	680	680	2500	4000	4000
	Rod lock nut	10	20	20	35	35	80	80	210	210
	Male fork	110	30	330	500	500	1300	1300	3500	3500

Overall dimensions and technical information are provided solely for informative purposes and may be modified without notice

Series 1319-1320-1321

General

This series of pneumatic cylinders is manufactured according to ISO 6431 standards adapted to VDMA 24562 and CNOMO/AFNOR 49003 that guarantee the interchangeability of the cylinders even without mounted anchoring.

Construction characteristics

End caps	from Ø32 to Ø125: UNI 5079 aluminium alloy casting painted black by cataphoresis from Ø160 to Ø200: UNI 3051 aluminium chilled painted black by cataphoresis
Rod	stainless steel or C43 chromed steel
Barrel	oxidised aluminium
Cushion bushings	hardened aluminium
Rod-guide bushing	self-lubricating sintered bronze
Piston	vulcanized rubber block on steel core with incorporated plastoferrite permanent magnet, or without magnet for non magnetic version (plus rear spacer).
Seals	standard: NBR Oil resistant rubber, PUR Piston rod and cushion seals (FPM seals available upon request)
Cushion adjustment screws	brass

Operational characteristics

Fluid	Filtered air. No lubrication needed, if applied it shall be continuous.									
Pressure	max. 10 bar									
Operating temperature	-5 °C - +70 °C with standard seals (magnetic or non magnetic piston) -5 °C - +80 °C with FPM seals for 1319 and 1320 series (magnetic piston) -5 °C - +150 °C with FPM seals for 1321 series (non magnetic piston)									
Cushioning length	Ø	32	40	50	63	80	100	125	160	200
	mm	28	32	32	40	44	50	55	55	55

Please follow the suggestions below to ensure a long life for these cylinders:
- use clean and lubricated air
- correct alignment during assembly with regard to the applied load so as to avoid radial components or bending the rod.
- avoid high speeds together with long strokes and heavy loads: this would produce kinetic energy which the cylinder cannot absorb, especially if used as a limit stop (in this case use mechanical stop device)
- evaluate the environmental characteristics of cylinder used (high temperature, hard atmosphere, dust, humidity etc.)

Please note: air must be dried for applications with lower temperature.
Use hydraulic oils H class (ISO VG32) for correct continued lubrication.
Our Technical Department will be glad to help.

Standard strokes (for all diameters)
Double acting version

from 0 to150, every 25 mm
over 150 up to 500, every 50 mm
over 500 up to 1000, every 100 mm

On request are available strokes up to 2800 mm

Single acting version
From Ø32 to Ø125, up to stroke 50 mm
On request are available strokes up to 200 mm

Stroke tolerance (ISO 15552)

Bore	Stroke	Tolerance
32 - 40 - 50	up to 500	+2 0
	over 500 up to 1250	+3,2 0
63 - 80 - 100	up to 500	+2,5 0
	over 500 up to 1250	+4 0
125 - 160 - 200	up to 500	+4 0
	over 500 up to 1250	+5 0

Minimum and maximum springs load for single acting version

Bore	Ø32	Ø40	Ø50 - Ø63	Ø80 - Ø100	Ø125
Min. load (N)	15	25	50	100	150
Max. load (N)	40	80	115	200	250

Overall dimensions and technical information are provided solely for informative purposes and may be modified without notice

Basic version "01"

Ordering code
1319.Ø.stroke.01 magnetic chromed rod **1320.Ø.stroke.01** magnetic stainless steel rod **1321.Ø.stroke.01** non magnetic chromed rod **13– –.Ø.stroke.01V** FPM seals **13– –.Ø.stroke.01MA** Front springs (Ø32-Ø125)* **13– –.Ø.stroke.01MP** Rear springs (Ø32-Ø125)*

* Max. stroke 50

This is the configuration that represents the basic cylinder according to ISO-VDMA standards. It can be directly anchored on machine parts using the four thread on the end cap. For other applications see the following pages where different types of attachments are shown.

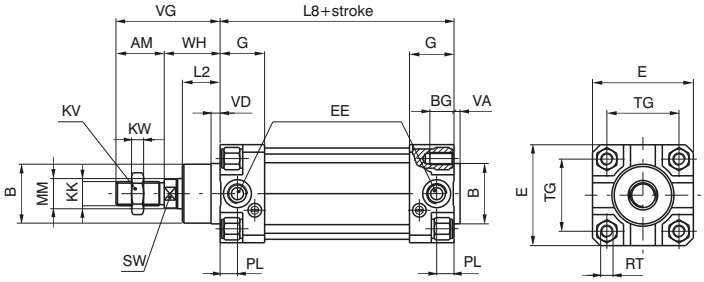

Through rod cylinder version "02"

Ordering code
1319.Ø.stroke.02 magnetic chromed rod **1320.Ø.stroke.02** magnetic stainless steel rod **1321.Ø.stroke.02** non magnetic chromed rod **13– –.Ø.stroke.02V** FPM seals

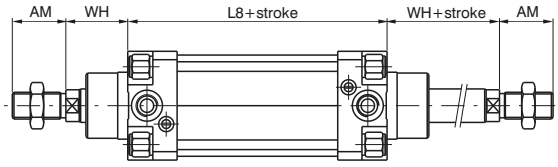

Tandem push with a common rods “G”

Ordering code
1319.Ø.stroke.G magnetic chromed rod **1320.Ø.stroke.G** magnetic stainless steel rod **1321.Ø.stroke.G** non magnetic chromed rod

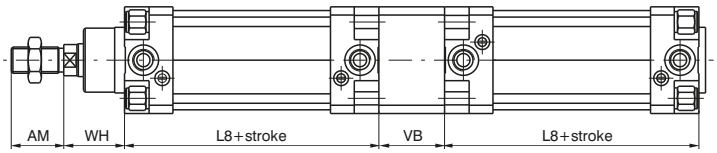

Tandem push with independent rods”F”

Ordering code
1319.Ø.stroke.stroke1.F magnetic chromed rod **1320.Ø.stroke.stroke1.F** magnetic stainless steel rod **1321.Ø.stroke.stroke1.F** non magnetic chromed rod

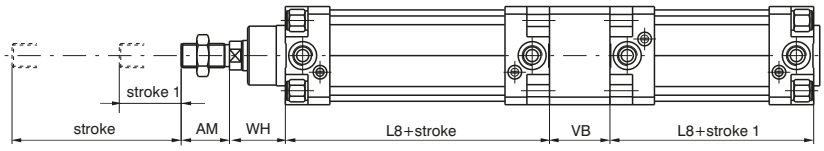

Opposed tandem with common rod "D"

Ordering code
1319.Ø.stroke.stroke1.D magnetic chromed rod **1320.Ø.stroke.stroke1.D** magnetic stainless steel rod **1321.Ø.stroke.stroke1.D** non magnetic chromed rod

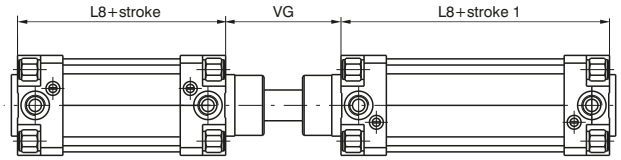

Tandem with opposed rods "E"

Ordering code
1319.Ø.stroke.stroke1.E magnetic chromed rod **1320.Ø.stroke.stroke1.E** magnetic stainless steel rod **1321.Ø.stroke.stroke1.E** non magnetic chromed rod

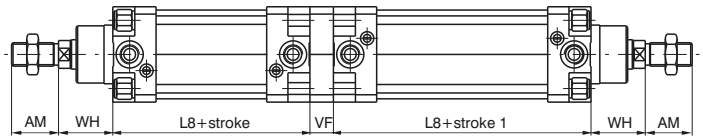

Table of dimensions

Bore		32	40	50	63	80	100	125	160	200
AM		22	24	32	32	40	40	54	72	72
B (d 11)		30	35	40	45	45	55	60	65	75
BG		14	14	16	16	21	21	23	24	24
E		46	52	65	75	95	115	140	180	220
EE		G 1/8"	G 1/4"	G 1/4"	G 3/8"	G 3/8"	G 1/2"	G 1/2"	G 3/4"	G 3/4"
G		25	29	29,5	36	36	40	45	49	49
KK		M10X1,25	M12X1,25	M16x1,5	M16x1,5	M20x1,5	M20x1,5	M27x2	M36x2	M36x2
KV		17	19	24	24	30	30	41	55	55
KW		6	7	8	8	9	9	12	18	18
L2		16	20	25	25	32	35	45	50	60
L8*		94	105	106	121	128	138	160	180	180
MM		12	16	20	20	25	25	32	40	40
PL		9	11,5	13	14	16	18	19	24	25
RT		M6	M6	M8	M8	M10	M10	M12	M16	M16
SW		10	13	17	17	22	22	27	32	32
TG		32,5	38	46,5	56,5	72	89	110	140	175
VA		4	4	4	4	4	4	6	5	5
VB		25	30	40	40	50	50	75	70	75
VD		5	6	6	6	10	10	12	10	10
VF		12	12	16	16	20	20	25	30	30
VG		48	54	69	69	86	91	119	152	167
WH		26	30	37	37	46	51	65	80	95
Weight	Stroke 0	480	730	1150	1600	2800	3600	7800	15000	21500
g	every 10 mm	25	32	56	60	90	100	140	265	325

* For strokes over 50mm, the length does not increase proportionally to the stroke, and allowance must be made for adequate spring allocation (see table of L8 dimensions).

"L8" dimensions for "rear spring" and "front spring"

Bore	32	40	50	63	80	100	125
L8 (Stroke 51 ÷ 100)	134	150	151	166	183	193	230
L8 (Stroke 101 ÷ 150)	174	195	196	211	238	248	300
L8 (Stroke 151 ÷ 200)	214	240	241	256	293	303	370

Overall dimensions and technical information are provided solely for informative purposes and may be modified without notice

Series 1348-1349-1350, Non rotating cylinders

Construction characteristics

End caps	UNI 5079 aluminium alloy casting painted black by cataphoresis
Rod	C43 chromed steel Ra = 0.2
Barrel	UNI 9006/1 aluminium alloy square section, hardened 30 micron oxidate
Cushion bushings	2011 UNI 9002/5 hardened alloy aluminium
Piston	polyacetal resin, self-lubricated and anti-wear, with plastoferrite rings in magnetic version
Piston seals	NBR oil-resistant rubber, PUR Piston rod and cushion seals
Cushioning adjustement screw	brass

Technical characteristics

Fluid	Filtered air. No lubrication needed, if applied it shall be continuous.
Pressure	10 bar
Operating temperature	-5°C - +70°C

Please follow the suggestions below to ensure a long life for these cylinders:
- use clean and lubricated air
- correct alignment during assembly with regard to the applied load so as to avoid radial components or bending the rod.
- avoid high speeds together with long strokes and heavy loads: this would produce kinetic energy which the cylinder cannot absorb, especially if used as a limit stop (in this case use mechanical stop device)
- evaluate the environmental characteristics of cylinder used (high temperature, hard atmosphere, dust, humidity etc.)

Please note: air must be dried for applications with lower temperature.
Use hydraulic oils H class (ISO VG32) for correct continued lubrication.
Our Technical Department will be glad to help.

Bore	Usable surface (square profile) cm^2	Max couple on the rod (max torque) Nm	Grade precision (rest rod, without load) anti-rotation	Cushion length mm.
32	8.31	0.5	12'	22
40	12.41	0.8	12'	27
50	18.41	1.1	12'	27
63	29.67	1.5	12'	32

Standard strokes (for all diameters)

from 0 to 150, every 25 mm
Other stroke for these following bores:
Ø 32 80 mm **Ø 40** 80 - 160 mm **Ø 50** 80 - 160 - 200 - 250 mm **Ø 63** 80 - 160 - 200 - 300 - 320 mm

On request are available strokes up to 1000 mm

Stroke Tolerance (ISO 15552)

Bore	Stroke	Tolerance
32 - 40 - 50 - 63	up to 500	+2 0

Basic version

Ordering code
1348.Ø.stroke.01 magnetic chromed rod **1349.Ø.stroke.01** magnetic stainless steel rod **1350.Ø.stroke.01** non-magnetic chromed rod

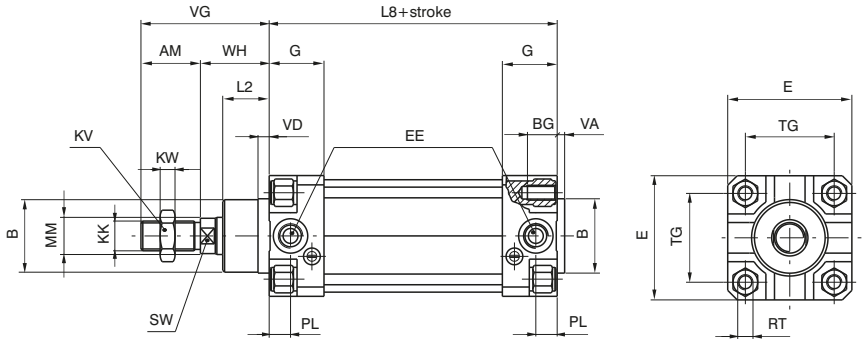

Bore		32	40	50	63
AM		22	24	32	32
B (d 11)		30	35	40	45
BG		12	12	16	16
E		46	52	65	75
EE		G 1/8"	G 1/4"	G 1/4"	G 3/8"
G		25	29	29,5	36
KK		M10x1,25	M12x1,25	M16x1,5	M16x1,5
KV		17	19	24	24
KW		6	7	8	8
L 2		16	20	25	25
L 8		94	105	106	121
MM		12	16	20	20
PL		9	11,5	13	14
RT		M6	M6	M8	M8
SW		10	13	17	17
TG		32,5	38	46,5	56,5
VA		4	4	4	4
VD		5	6	6	6
VG		48	54	69	69
WH		26	30	37	37
Weight	stroke 0	505	705	1320	1710
g	every 10 mm	24	33	53	58

This is the configuartion that represents the basic cylinder according to ISO standards. It can be directly anchored on machine parts using the four threads on the end cap. For other applications see the following pages where different types of attachments shown.

Through rod cylinder version

Ordering code
1348.Ø.stroke.02 magnetic chromed rod **1349.Ø.stroke.02** magnetic stainless steel rod **1350.Ø.stroke.02** non-magnetic chromed rod

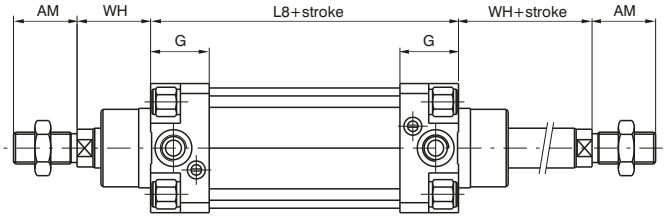

Overall dimensions and technical information are provided solely for informative purposes and may be modified without notice

Sensor brackets

Sensor brackets codes 1500._, RS._, HS._	Sensor brackets codes 1595.HAP	Bore	L
Code	Code		
1320.A	1320.ASC	Ø32	60
		Ø40	65
1320.B	1320.BSC	Ø50	77
		Ø63	87
1320.C	1320.CSC	Ø80	105
		Ø100	125
1320.D	1320.DSC	Ø125	145
1320.E	1320.ESC	Ø160	184
1320.F	1320.FSC	Ø200	222

Sensor brackets codes 1580._, MRS._, MHS._		
Code	Bore	L1
1320.AS	Ø32	48
	Ø40	54
1320.BS	Ø50	66
	Ø63	76
1320.CS	Ø80	96
	Ø100	112
1320.DSC	Ø125	145
1320.ESC	Ø160	184
1320.FSC	Ø200	222

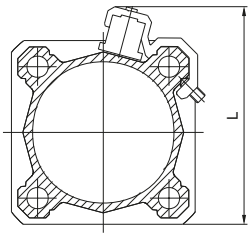

Sensors 1500._,RS._,HS._

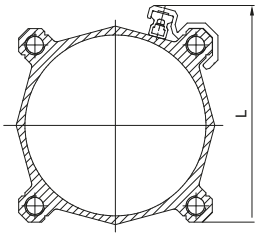

Sensors 1595.HAP

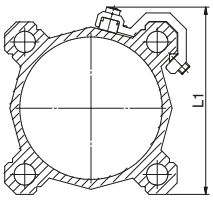

Sensors 1580._, MRS._, MHS._

Sensors for microbore cylinders: for technical characteristics and ordering codes see "Magnetic sensors" section

Solenoid valves supports

This accessory permits to mount a valve or an electrovalve on a side of the cylinder. The plate can be fitted on the cylinder profiled barrel, and, on it, can be mounted either a threaded distributor or a base on whic can be mounted an ISO distributor. Once installed the connections must be done with fittings and pipes. All of the threaded holes on the support plate are dedicated to different valves series as per attached drawing.

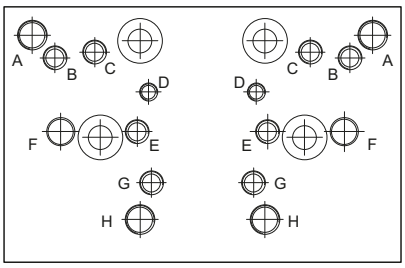

Fixing holes for valves series:

A = 414/2
B = 824
C = 828, T488, 488, 484
D = 2400
E = 2600
F = Bases for ISO distributors
G = 858/2
H = T424

Ordering code
1320.15 (Ø32 - Ø40) **1320.16** (Ø50 - Ø63) **1320.17** (Ø80 - Ø100) **1320.18** (Ø125) **1320.19** (Ø160) **1320.20** (Ø200)

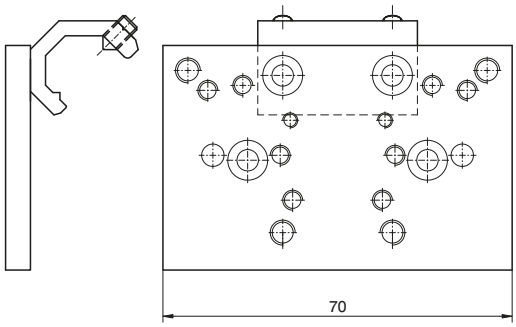

Bases for ISO solenoid valves

Ordering code

1320.21	bases for ISO 1 solenoid valves
1320.22	bases for ISO 2 solenoid valves

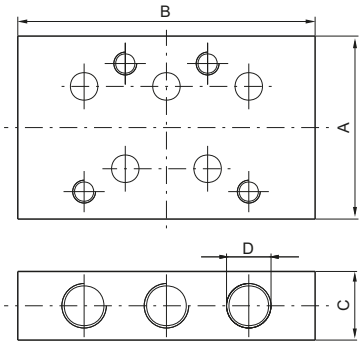

		Dimensions			
		A	B	C	D
1320.21	bases for ISO 1 solenoid valves	40	75	15	G 1/8"
1320.22	bases for ISO 2 solenoid valves	50	95	20	G 1/4"

Series 1386-1387-1388/ 1396/1397/1398, ECOPLUS

General

Profiled tube has two "T" slots on the three sides hosting sensors 1580._, MRS._, MHS._. without adaptors.

Construction characteristics

End caps	Series 1386 - 1388: high resistant thermoplastic material	Series 1396 - 1398: Die-casting aluminium
Rod	C43 chromed steel or stainless steel	
Barrel	anodised aluminium alloy	
Rod-guide bushing	self-lubricating sintered bronze	
Piston	acetal resin, aluminium on request	
Seal	standard: NBR Oil resistant rubber, PUR Piston rod seals (PUR seals available upon request)	
Cushion adjusting screws	brass	

Operational characteristics

Fluid	Filtered air. No lubrication needed, if applied it shall be continuous.											
Max. pressure	10 bar											
Operating temperature	-5°C - +70°C with standard seals -30°C - +80°C with PUR seals											
Bore	Ø	32	-	40	-	50	-	63	-	80	-	100
Cushioning lenght	mm	27	-	31	-	31	-	37	-	40	-	44
Cushioning lenght "K" and "PK" version	mm	20	-	20	-	22	-	22	-	32	-	32

Please follow the suggestions below to ensure a long life for these cylinders:
- use clean and lubricated air
- correct alignment during assembly with regard to the applied load so as to avoid radial components or bending the rod;
- avoid high speeds together with long strokes and heavy loads: this would produce kinetic energy which the cylinder cannot absorb, especially if used as a limit stop (in this case use mechanical stop device and aluminium piston);
- evaluate the environmental characteristics of cylinder used (high temperature, hard atmosphere, dust, humidity etc.)

Please note: air must be dried for applications with lower temperature.
Use hydraulic oils H class (ISO VG32) for correct continued lubrication.
Our Technical Department will be glad to help.

Standard strokes (for all diameters)

from 0 to 150, every 25 mm
from 150 to 500, every 50 mm
from 500 to 1000, every 100

On request are available strokes up to 2800 mm

Stroke tolerance (ISO 15552)

Bore	Stroke	Tolerance
32 - 40 - 50	up to 500	+2 0
	over 500 up to 1000	+3.2 0
63 - 80 - 100	up to 500	+2.5 0
	over 500 up to 1000	+4 0

Overall dimensions and technical information are provided solely for informative purposes and may be modified without notice

Basic version “01”

Ordering code
TECHNOPOLYMER COVERS **1386.Ø.stroke.01** Magnetic chromed rod **1387.Ø.stroke.01** Magnetic stainless steel rod **1388.Ø.stroke.01** Non magnetic chromed rod **ALUMINIUM COVERS** **1396.Ø.stroke.01** Magnetic chromed rod **1397.Ø.stroke.01** Magnetic stainless steel rod **1398.Ø.stroke.01** Non magnetic chromed rod

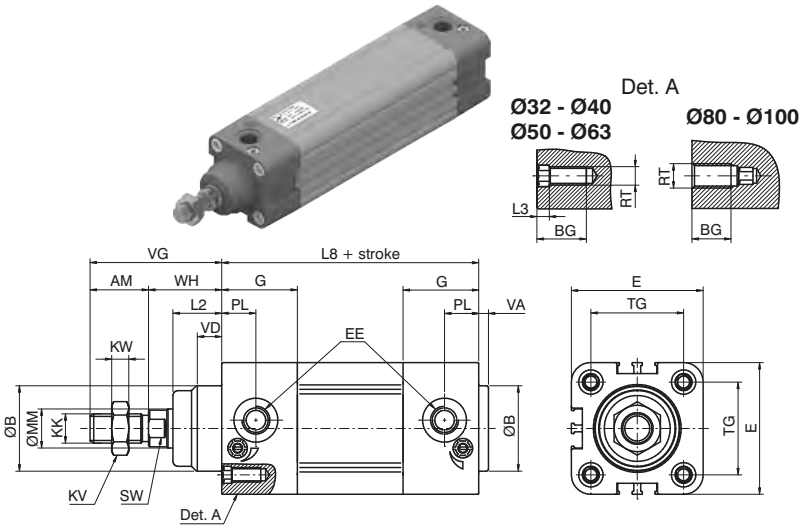

Through rod cylinder version “02”

Ordering code
TECHNOPOLYMER COVERS **1386.Ø.stroke.02** Magnetic chromed rod **1387.Ø.stroke.02** Magnetic stainless steel rod **1388.Ø.stroke.02** Non magnetic chromed rod **ALUMINIUM COVERS** **1396.Ø.stroke.02** Magnetic chromed rod **1397.Ø.stroke.02** Magnetic stainless steel rod **1398.Ø.stroke.02** Non magnetic chromed rod

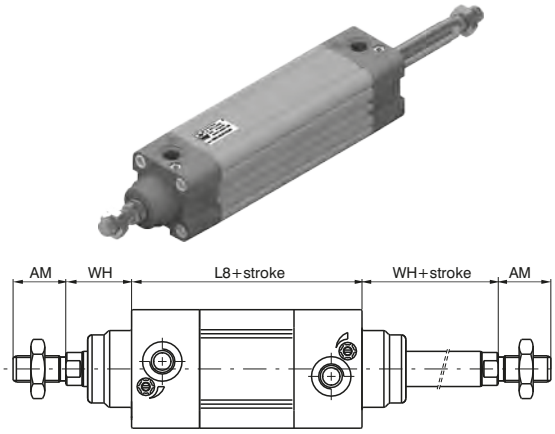

Tandem push with common rods “G”

Ordering code
TECHNOPOLYMER COVERS **1386.Ø.stroke.G** Magnetic chromed rod **1387.Ø.stroke.G** Magnetic stainless steel rod **1388.Ø.stroke.G** Non magnetic chromed rod **ALUMINIUM COVERS** **1396.Ø.stroke.G** Magnetic chromed rod **1397.Ø.stroke.G** Magnetic stainless steel rod **1398.Ø.stroke.G** Non magnetic chromed rod

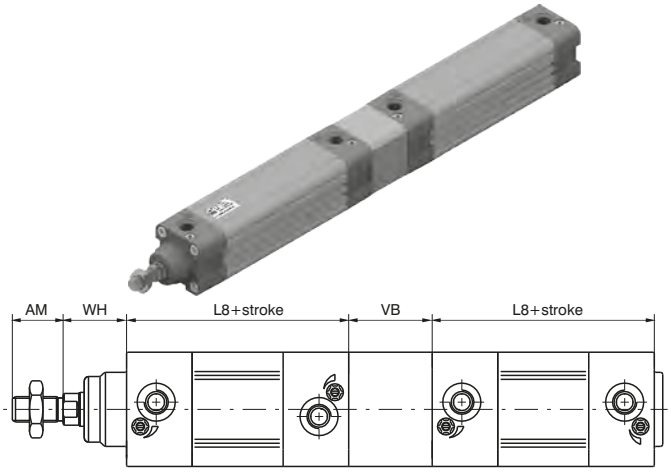

Tandem push with independent rods “F”

Ordering code
TECHNOPOLYMER COVERS **1386.Ø.stroke.stroke1.F** Magnetic chromed rod **1387.Ø.stroke.stroke1.F** Magnetic stainless steel rod **1388.Ø.stroke.stroke1.F** Non magnetic chromed rod **ALUMINIUM COVERS** **1396.Ø.stroke.stroke1.F** Magnetic chromed rod **1397.Ø.stroke.stroke1.F** Magnetic stainless steel rod **1398.Ø.stroke.stroke1.F** Non magnetic chromed rod

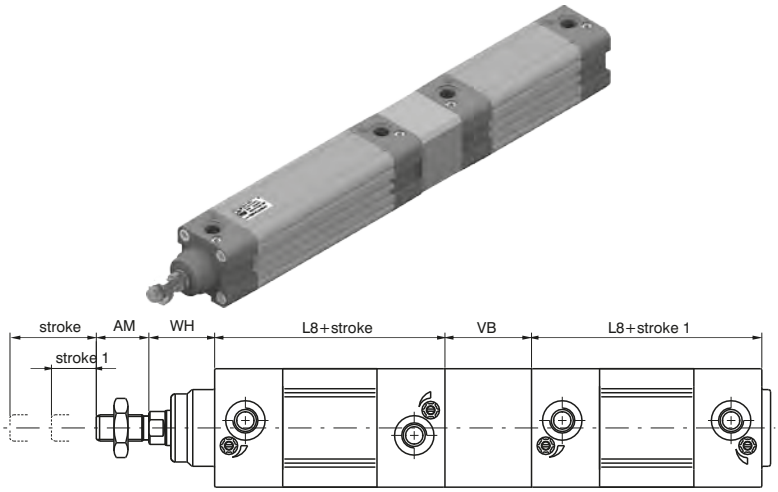

Opposed tandem with common rod "D"

Ordering code

TECHNOPOLYMER COVERS
1386.Ø.stroke.stroke1.D Magnetic chromed rod
1387.Ø.stroke.stroke1.D Magnetic stainless steel rod
1388.Ø.stroke.stroke1.D Non magnetic chromed rod

ALUMINIUM COVERS
1396.Ø.stroke.stroke1.D Magnetic chromed rod
1397.Ø.stroke.stroke1.D Magnetic stainless steel rod
1398.Ø.stroke.stroke1.D Non magnetic chromed rod

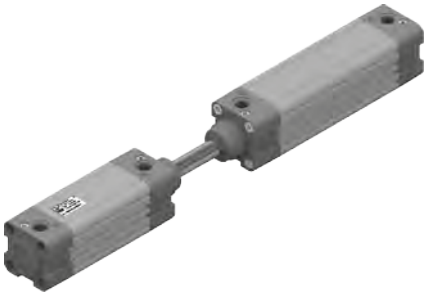

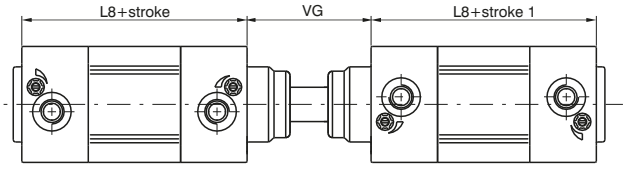

Tandem with opposed rods "E"

Ordering code

TECHNOPOLYMER COVERS
1386.Ø.stroke.stroke1.E Magnetic chromed rod
1387.Ø.stroke.stroke1.E Magnetic stainless steel rod
1388.Ø.stroke.stroke1.E Non magnetic chromed rod

ALUMINIUM COVERS
1396.Ø.stroke.stroke1.E Magnetic chromed rod
1397.Ø.stroke.stroke1.E Magnetic stainless steel rod
1398.Ø.stroke.stroke1.E Non magnetic chromed rod

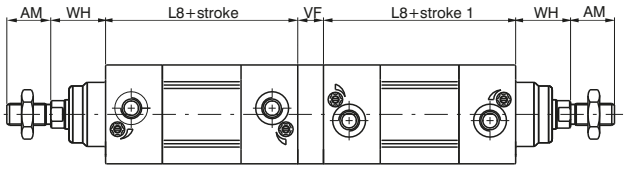

Variants

Ordering code

13_ _.Ø.stroke._ _.P = Version with PUR seals
13_ _.Ø.stroke._ _.K = Version with aluminium piston
13_ _.Ø.stroke._ _.PK =Version with PUR seals and aluminium piston

Table of dimensions

Bore			32	40	50	63	80	100
AM			22	24	32	32	40	40
B (d 11)			30	35	40	45	45	55
BG			16	16	18	18	16	16
E			46	54	65	77,5	95,5	115,5
EE			G 1/8"	G 1/4"	G 1/4"	G 3/8"	G 3/8"	G 1/2"
G			29	31	33	36	40	44
KK			M10X1,25	M12X1,25	M16x1,5	M16x1,5	M20x1,5	M20x1,5
KV			17	19	24	24	30	30
KW			6	7	8	8	9	9
L2			16	20	25	25	32	35
L3			4	4	5	5	/	/
L8			94	105	106	121	128	138
MM			12	16	20	20	25	25
PL			13	14	14	16	16	18
RT			M6	M6	M8	M8	M10	M10
SW			10	13	17	17	22	22
TG			32,5	38	46,5	56,5	72	89
VA			4	4	4	4	4	4
VB			33	41	51	51	65	71
VD			8	10	12	12	15	16
VF			12	12	16	16	20	20
VG			48	54	69	69	86	91
WH			26	30	37	37	46	51
Weight	Aluminium	stroke 0	550	690	1200	1590	2500	3670
g	covers	every 10 mm	29	40	57	66	96	112
Weight	Technopolymer	stroke 0	470	590	1020	1320	2090	3010
g	covers	every 10 mm	29	40	57	66	96	112

Overall dimensions and technical information are provided solely for informative purposes and may be modified without notice

Solenoid valves supports

This accessory permits to mount a valve or an electrovalve on a side of the cylinder. The plate can be fitted on the cylinder profiled barrel, and, on it, can be mounted either a threaded distributor or a base on whic can be mounted an ISO distributor. Once installed the connections must be done with fittings and pipes. All of the threaded holes on the support plate are dedicated to different valves series as per attached drawing.

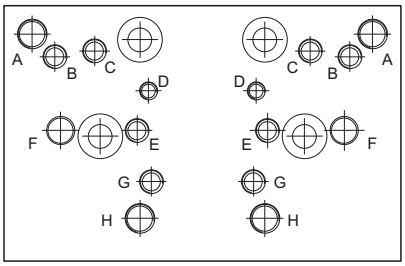

Fixing holes for valves series:

A = 414/2
B = 824
C = 828, T488, 488, 484
D = 2400
E = 2600
G = 858/2
H = T424

Ordering code
1386.15

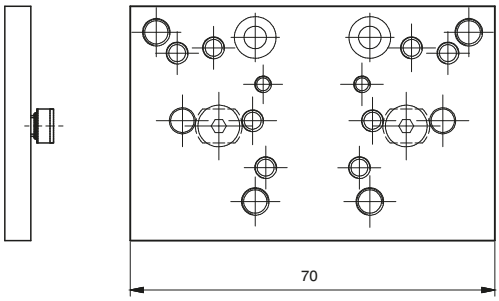

Attention: do not use ISO distributor for base mounting

Bases for ISO solenoid valves

Ordering code	
1320.23	bases for ISO 1 solenoid valves
1320.24	bases for ISO 2 solenoid valves

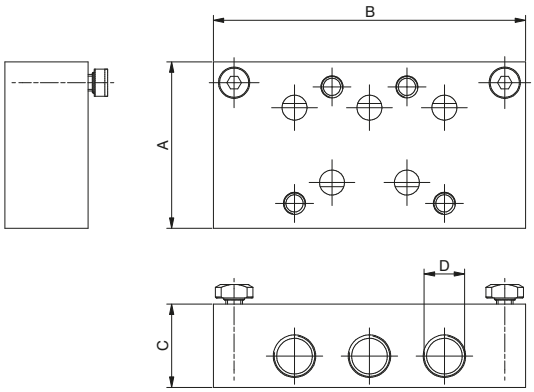

	Dimensions			
	A	B	C	D
bases for ISO 1 solenoid valves	40	75	15	G 1/8"
bases for ISO 2 solenoid valves	50	95	20	G 1/4"

Series 1390-1391-1392, ECOLIGHT

Construction characteristics

End caps	die-casting aluminium
Rod	C43 chromed steel or stainless steel
Barrel	aluminium alloy anodised
Rod-guide bushing	spheroid bronze on steel band with P.T.F.E. coat
Piston	Ø32 - Ø100 acetal resin, aluminium on request Ø125 - Ø200 aluminium **V, Q, R, L** versions (Ø32 - Ø100): aluminium
Seals	standard: NBR oil resistant rubber, PUR piston rod seals **V** version: FPM **P** version: PUR **Q** version: NBR and PUR with plastic rod scraper with a high wear resistance **R** version: PUR with metallic rod scraper **L** version: special PUR
Cushion adjusting screws	brass

Operational characteristics

Fluid	Filtered air. No lubrication needed, if applied it shall be continuous. **L version** (for low temperature): dried air, guarantee a dew point lower than the minimum operating temperature
Max. pressure	10 bar
Operating temperature	-5°C - +70°C with standard seals -30°C - +80°C with PUR seals (**P** version) -5°C - +80°C with FPM seals for 1390 and 1391 series (magnetic piston) (**V** version) -5°C - +150°C with FPM seals for 1392 series (no magnetic piston) (**V** version) -20°C - +80°C (**Q** version) -10°C - +80°C (**R** version) -50°C - +80°C (**L** version)

Bore	Ø	32	40	50	63	80	100	125	160	200
Cushioning lenght	mm	27	31	31	37	40	44	44	50	55
Cushion length version with aluminum piston	mm	20	20	22	22	32	32	/	/	/

Overall dimensions and technical information are provided solely for informative purposes and may be modified without notice

Please follow the suggestions below to ensure a long life for these cylinders:
- use clean and lubricated air
- correct alignment during assembly with regard to the applied load so as to avoid radial components or bending the rod;
- avoid high speeds together with long strokes and heavy loads: this would produce kinetic energy which the cylinder cannot absorb, especially if used as a limit stop (in this case use mechanical stop device and the aluminium piston);
- evaluate the environmental characteristics of cylinder used (high temperature, hard atmosphere, dust, humidity etc.)

VERSIONS WITH ADDITIONAL ROD SCRAPER

Version with plastic rod scraper (Q)

The pneumatic seal is manufactured using a special NBR seal material, with the rod scraper that comes in contact with the external environment made of a plastic material with a high wear resistance. The geometric shape with its excellent scraping capacity guarantees additional protection of the piston rod and nose seal against the impurities, liquids, water, and debris.

Version with metallic rod scraper (R)

The pneumatic seal is manufactured using a special FPM seal material with its own scraping lip with the additional rod scraper that comes into contact with the external environment made of metal. This combination of scraping lip and metal rod scraper enable these actuators to be used in particularly extreme environments.

Here are some examples:

Aluminum foundries: To remove the residues of alumina or fluorine compounds that are deposited on the piston rod during the preparation phase of aluminum casting.

Automotive: To prevent debris which has collected on the piston rod damaging the nose seal during operation especially waste produced during the welding process.

Industrial ovens: To eliminate cement powders or those produced during the manufacture of bricks/tiles

Thanks to the high-performance nose seal and scraper protection of the piston rod, the cylinder will be protected against premature wear that you would normally experience using standard cylinders in these harsh environments.

Low temperature version (L): The special seals compound allows the use of the cylinders up to a temperature of -50°C. The rod scraper seal is equipped with a metallic scraper which removes ice crystals which might form at minus temperature

Please note: air must be dry for applications with lower temperature.

Use hydraulic oils H class (ISO VG32) for correct continued lubrication.

Our Technical Department will be glad to help.

Standard strokes (for all diameters)

from 0 to 150, every 25 mm
from 150 to 500, every 50 mm
from 500 to 1000, every 100 mm

On request are available strokes up to 2800 mm

Stroke tolerance (ISO 15552)

Bore	Stroke	Tolerance
32 - 40 - 50	up to 500	+2 0
	over 500 up to 1250	+3.2 0
63 - 80 - 100	up to 500	+2.5 0
	over 500 up to 1250	+4 0
125 - 160 - 200	up to 500	+4 0
	over 500 up to 1250	+5 0

Basic version “01”

Ordering code
1390.Ø.stroke.01 Magnetic chromed rod **1391.Ø.stroke.01** Magnetic stainless steel rod **1392.Ø.stroke.01** Non magnetic chromed rod

This is the configuration representing the basic cylinder according to ISO–VDMA standards. It can be directly anchored on machine parts using the four threads on the end cap screws. For other applications see “Cylinder section” on the General Catalogue, where different types of attachments are shown.

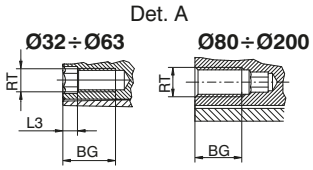

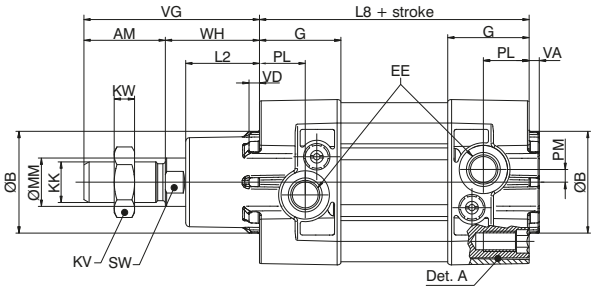

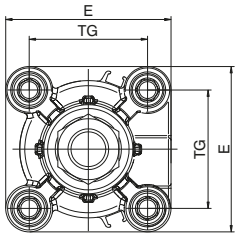

Through rod cylinder version “02”

Ordering code
1390.Ø.stroke.02 Magnetic chromed rod **1391.Ø.stroke.02** Magnetic stainless steel rod **1392.Ø.stroke.02** Non magnetic chromed rod

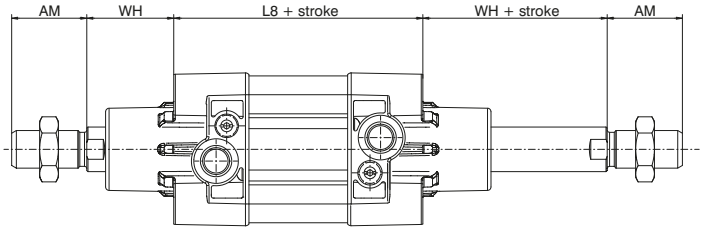

Tandem push with common rods “G”

Ordering code
1390.Ø.stroke.G Magnetic chromed rod **1391.Ø.stroke.G** Magnetic stainless steel rod **1392.Ø.stroke.G** Non magnetic chromed rod

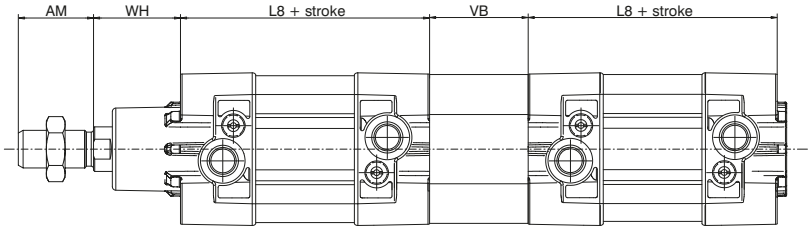

Tandem push with independent rods “F”

Ordering code
1390.Ø.stroke.stroke1.F Magnetic chromed rod **1391.Ø.stroke.stroke1.F** Magnetic stainless steel rod **1392.Ø.stroke.stroke1.F** Non magnetic chromed rod

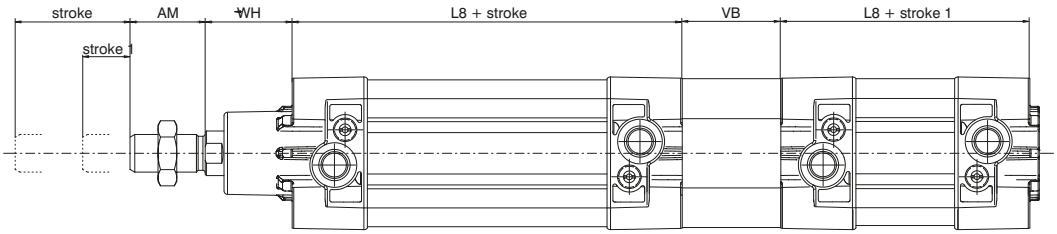

Overall dimensions and technical information are provided solely for informative purposes and may be modified without notice

Opposed tandem with common rod "D"

Ordering code
1390.Ø.stroke.stroke1.D Magnetic chromed rod **1391.Ø.stroke.stroke1.D** Magnetic stainless steel rod **1392.Ø.stroke.stroke1.D** Non magnetic chromed rod

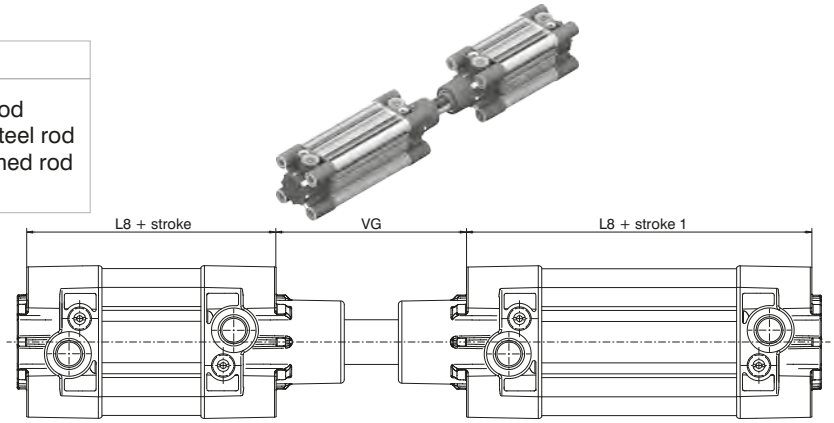

Tandem with opposed rods - "E"

Ordering code
1390.Ø.stroke.stroke1.E Magnetic chromed rod **1391.Ø.stroke.stroke1.E** Magnetic stainless steel rod **1392.Ø.stroke.stroke1.E** Non magnetic chromed rod

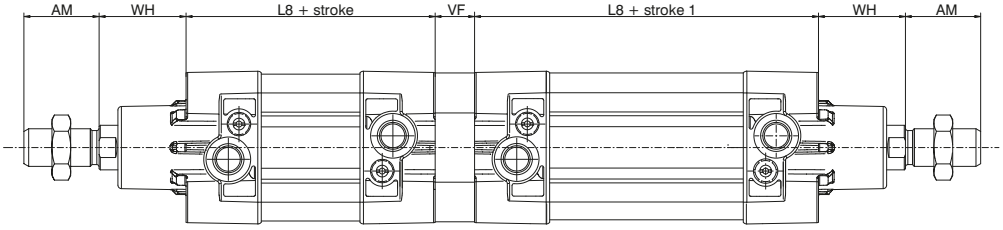

Variants

Ordering code
139_.Ø.stroke._ _.P = Version with PUR seals
139_.Ø.stroke._ _.K = Version with aluminium piston (from Ø32 to Ø100)
139_.Ø.stroke._ _.PK =Version with PUR seals and aluminium piston (from Ø32 to Ø100)
139_.Ø.stroke._ _.V =Version with FPM seals and aluminium piston
139_.Ø.corsa._ _.R = Version with metallic rod scraper and aluminium piston (Ø32-Ø100)
139_.Ø.corsa._ _.Q = Version with plastic rod scraper and aluminium piston (Ø32-Ø100)
139_.Ø.stroke._ _.PQ = Version with PUR seals and plastic rod scraper and aluminium piston (Ø32-Ø100)
139_.Ø.corsa._ _.L = Version for low temperature and aluminium piston (-50°C) (Ø32-Ø100)

Table of dimensions

Bore		32	40	50	63	80	100	125	160	200
AM		22	24	32	32	40	40	54	72	72
B (d 11)		30	35	40	45	45	55	60	65	75
BG		16	16	18	18	16	16	21	25	25
E		47	54	65	76	95	113	138	180	216
EE		G 1/8"	G 1/4"	G 1/4"	G 3/8"	G 3/8"	G 1/2"	G 1/2"	G 3/4"	G 3/4"
G		29.5	33	32	36	38.5	41.5	48	49	49
KK		M10X1.25	M12X1.25	M16x1.5	M16x1.5	M20x1.5	M20x1.5	M27x2	M36x2	M36x2
KV		17	19	24	24	30	30	41	55	55
KW		6	7	8	8	9	9	12	18	18
L2		19	22	29	29	35	36	45	50	60
L3		4	4	5	5	/	/	/	/	/
L8		94	105	106	121	128	138	160	180	180
MM		12	16	20	20	25	25	32	40	40
PL		13	16	18	18	16	18	25	26	25
PM		3	4	5	4.5	2.5	6	8	11	11
RT		M6	M6	M8	M8	M10	M10	M12	M16	M16
SW		10	13	17	17	22	22	27	36	36
TG		32.5	38	46.5	56,5	72	89	110	140	175
VA		4	4	4	4	4	4	6	6	6
VB		33	41	51	51	65	71	75	70	75
VD		4	4	4	4	4	4	6	6	6
VF		12	12	16	16	20	20	25	30	30
VG		48	54	69	69	86	91	119	152	167
WH		26	30	37	37	46	51	65	80	95
Weight	stroke 0	460	650	1030	1360	2180	2890	5700	11200	14900
g	every 10 mm	23	32	45	49	75	81	130	195	245

On the ECOLIGHT series it is possible to use three sensor types, according to bore, as indicated below:

Sensors code **1500._**
RS._
HS._

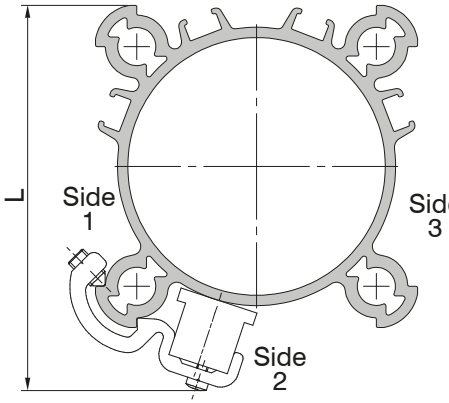

Ø32 - Ø100: the sensors can be fixed on the three sides as indicated in the drawing, by using suitable brackets (except for Ø32 on side 2)

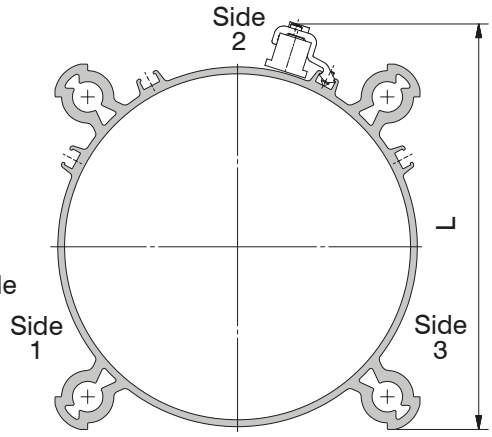

Ø125 - Ø200: the sensors can be fixed on the three sides as indicated in the drawing, by using suitable bracket

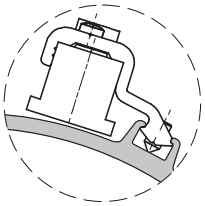

Code	Bore	L
1390.A	Ø32	58
	Ø40	65
1390.B	Ø50	75
	Ø63	86
1390.C	Ø80	105
	Ø100	122
1390.D	Ø125	150
	Ø160	190
	Ø200	225

Sensors code **1580._**
MRS._
MHS._

Feeding connections side sensors slots

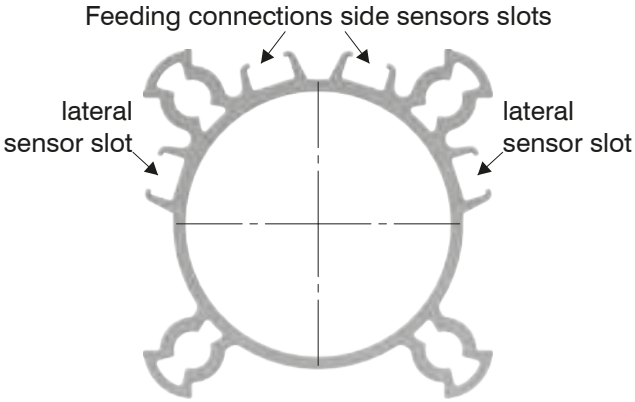

Sensors code **1590._**
LRS._
LHS._

1590 series sensor only

1580 and 1590 series sensors

1580 and 1590 series sensors

Ø32 - Ø63

CYLINDERS - BORE SIZES Ø32 to Ø63:
The two slots on connection side are plugged, therefore only sensor 1590 can be used. Suitable for top housing and once placed by means of its screw, it can be fixed in desired position.

1580 and 1590 series sensors

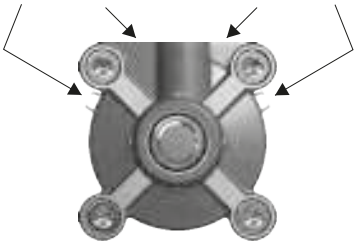

Ø80

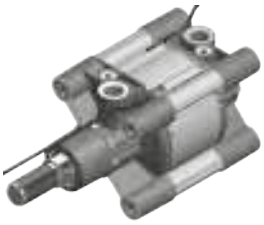

CYLINDERS - BORE SIZE Ø80:
The two top housing can be accessed from the front of the unit, one housing can be accessed from the front end cap and the opposite housing from the rear end cap. It is therefore possible to use both type of sensors: 1580 - 1590.

1580 and 1590 series sensors

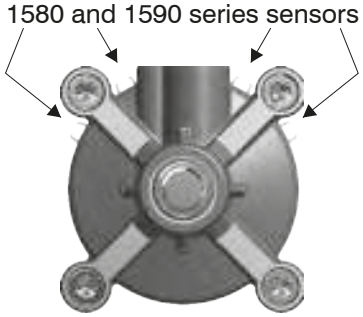

Ø100 - Ø200

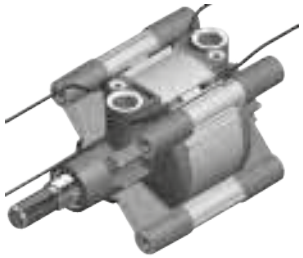

CYLINDERS - BORE SIZE Ø100-Ø200:
All four housings can be accessed from the front of the unit. It is therefore possible to use both type of sensors: 1580 - 1590.

Overall dimensions and technical information are provided solely for informative purposes and may be modified without notice

Solenoid valves supports

This accessory permits to mount a valve or an electrovalve on a side of the cylinder. The plate can be fitted on the cylinder profiled barrel. Once installed the connections must be done with fittings and pipes. All of the threaded holes on the support plate are dedicated to different valves series as per attached drawing.

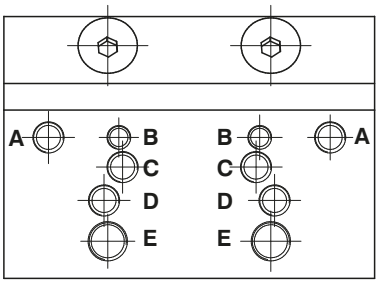

Fixing holes for valves series:

A = 488 / 484
B = 2400
C = T488
D = 2600
E = T424

Ordering code
1390.25 (for Ø32) **1390.26** (for Ø40) **1390.27** (for Ø50) **1390.28** (for Ø63) **1390.29** (for Ø80) **1390.30** (for Ø100)

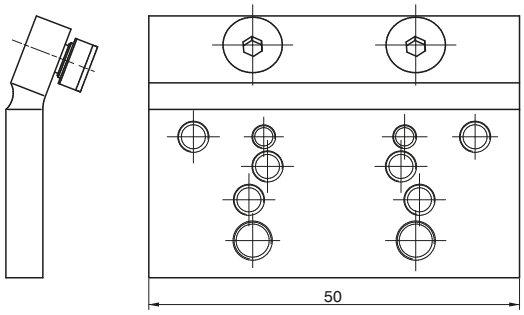

Attention: do not use ISO distributor for base mounting

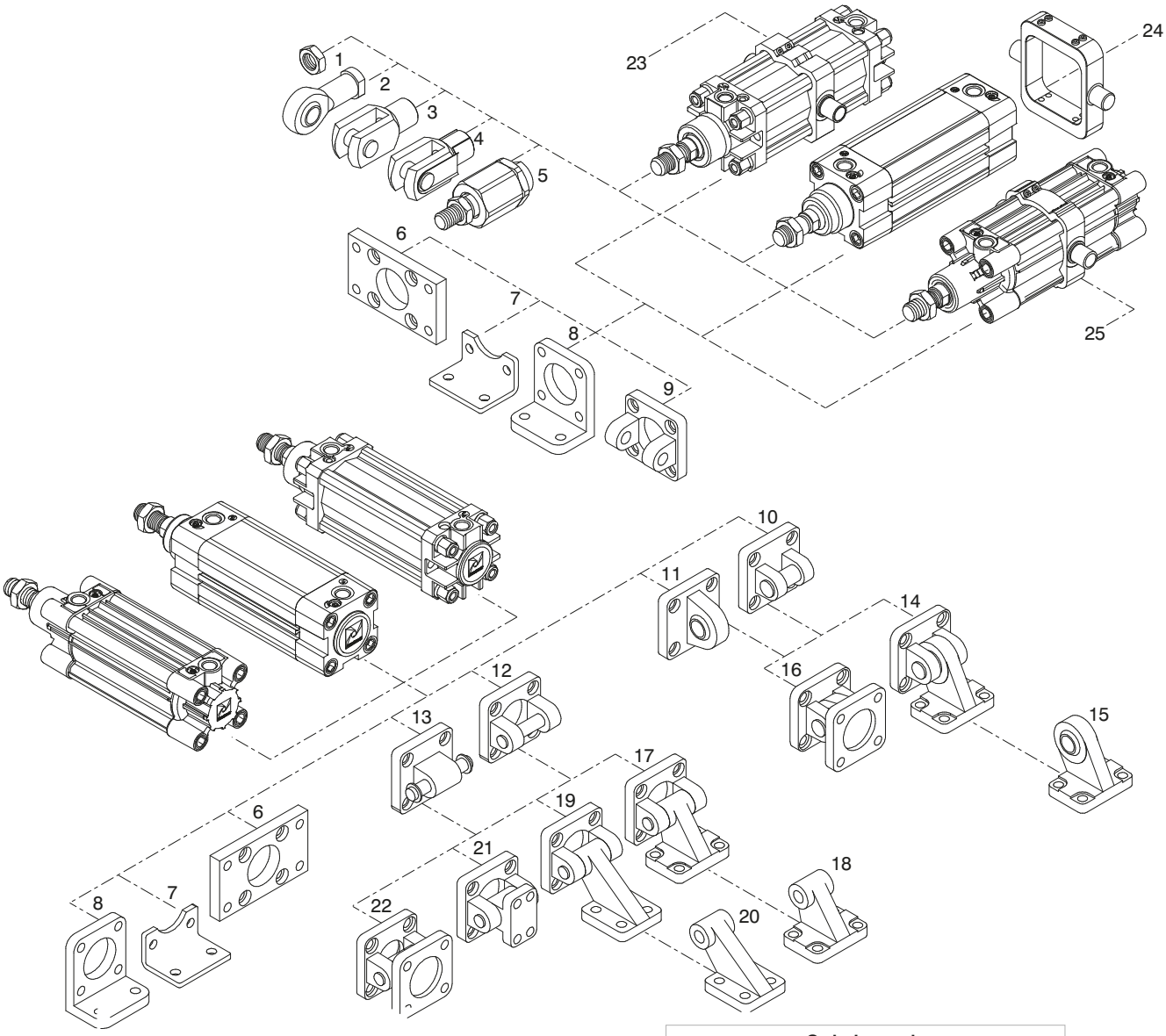

Pos.	Description	Ordering code	
		Aluminium	Steel
1	Rod nut	/	**1320.Ø.18F**
2	Ball joint	/	**1320.Ø.32F**
3	Forks	/	**1320.Ø.13F**
4	Fork with clips	/	**1320.Ø.13/1F**
5	Self-aligning joint	/	**1320.Ø.33F**
6	Flange (MF1-MF2)	**1390.Ø.03F** **1390.Ø.03FP**	**1380.Ø.03F**
7	Short mounting foot brackets (in sheet metal MS1)	/	**1320.Ø.05/1F**
8	Standard mounting foot brackets	**1320.Ø.05F**	/
9	Front clevis	**1380.Ø.08F**	**1320.Ø.19F**
10	Rear narrow clevis (AB6)	**1380.Ø.30F**	**1320.Ø.29F**
11	Rear male clevis (with jointed head according to DIN 648K standard)	**1380.Ø.15F**	**1320.Ø.25F**
12	Rear female clevis (MP2)	**1380.Ø.09F**	**1320.Ø.20F**
13	Rear male clevis (MP4)	**1380.Ø.09/1F**	**1320.Ø.21F**
14	Complete square angle trunnion (pos.10 + pos.15)	/	**1320.Ø.27F**
15	Simple square counter clevis (pos.14)	/	**1320.Ø.28F**
16	Square angle trunnion with joined head (pos.10 + pos.11)	**1380.Ø.36F**	**1320.Ø.26F**
17	Square angle trunnion (AB7) (pos.18 + pos.12)	**1380.Ø.35F**	**1320.Ø.23F**
18	Simple square counter clevis (pos.17)	**1320.Ø.11/2F**	**1320.Ø.24F**
19	Simple rear trunnion with support brackets (pos.20 + pos.12)	**1380.Ø.11F**	/
20	Simple square counter clevis (pos.19)	**1320.Ø.11/1F**	/
21	Standard trunnion	**1380.Ø.10F**	/
22	Standard complete trunnion (pos.12 + pos.13)	**1380.Ø.22F**	**1320.Ø.22F**
23	1319 - 1321 cylinders series Intermediate trunnion	**1320.Ø.12BF**	**1320.Ø.12F**
24	1386 - 1388 / 1396 - 1398 Ecoplus series Intermediate trunnion	/	**1386.Ø.12F**
25	1390 - 1392 Ecolight series Intermediate trunnion	**1390.Ø.12F**	/

Overall dimensions and technical information are provided solely for informative purposes and may be modified without notice

Front and rear flanges (MF1 - Mf2)

Ordering code			
Steel	:	**1380.Ø.03F**	(Ø32 ... Ø200)
Aluminium	:	**1390.Ø.03F**	(Ø32 ... Ø100)
Die-casting aluminium		**1390.Ø.03FP**	(Ø32 ... Ø100)

Plate which allows anchorage of the cylinder at a right angle to the plane. It is made of zinc-plated extruded steel.

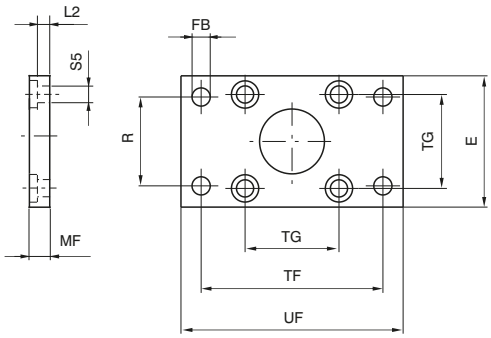

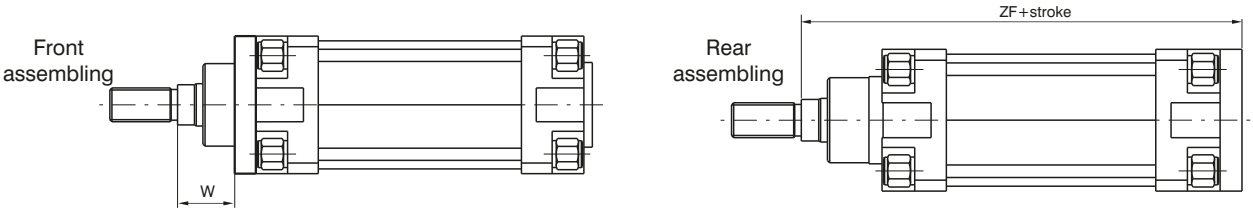

Bore	E	FB (H 13)	MF (JS 14)	R (JS 14)	TF (JS 14)	TG	UF	ZF	W	L2	S5	Weight(g) steel	Weight(g) aluminium	Weight(g) Die-casting aluminium
32	45	7	10	32	64	32,5	80	130	16	5	6,6	190	65	60
40	52	9	10	36	72	38	90	145	20	5	6,6	250	90	69
50	65	9	12	45	90	46,5	110	155	25	6,5	9	480	170	130
63	75	9	12	50	100	56,5	120	170	25	6,5	9	620	220	170
80	95	12	16	63	126	72	150	190	30	8	11	1430	500	345
100	115	14	16	75	150	89	170	205	35	8	11	1990	690	485
125	140	16	20	90	180	110	205	245	45	10,5	14	3750	/	/
160	180	18	20	115	230	140	260	280	60	9,5	18	6350	/	/
200	220	22	25	135	270	175	300	300	70	12,5	18	11350	/	/

Standard mounting foot brackets

Ordering code	
Aluminium:	**1320.Ø.05F** (1 piece)

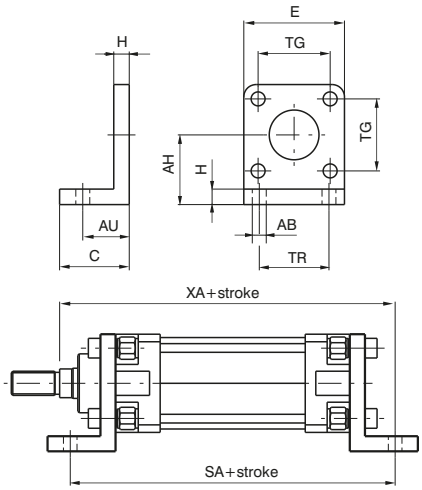

Elements used to anchor the cylinder parallel to the mounting plane. They are made of cast aluminium, painted black.

Bore	32	40	50	63	80	100	125	160	200
AB (H 14)	7	9	9	9	12	14	16	18	22
AH (JS 15)	32	36	45	50	63	71	91	115	135
AU (±0,2)	24	28	32	32	41	41	45	60	70
C	35	35	45	45	55	56	68	82	90
E	45	52	65	75	95	115	140	180	220
H	8	8	10	10	12	12	16	20	20
SA	142	161	170	185	210	220	250	300	320
TG	32,5	38	46,5	56,5	72	89	110	140	175
TR (JS 14)	32	36	45	50	63	75	90	115	135
XA	144	163	175	190	215	230	270	320	345
Weight gr.	45	65	140	175	380	470	920	2300	3200

Short mounting foot brackets (in sheet metal MS1)

Ordering code	
Steel:	**1320.Ø.05/1F** (1 piece)

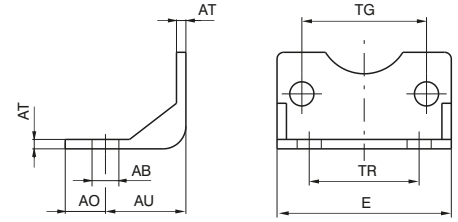

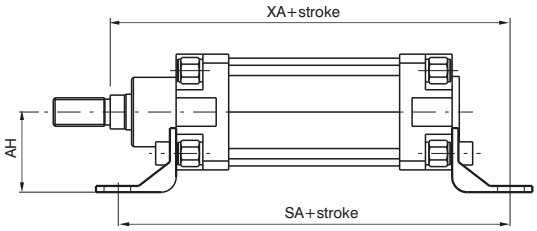

Elements used to anchor the cylinder parallel to the mounting plane. They are made of steel, and painted black.

Bore	32	40	50	63	80	100	125	160	200
AB (H 14)	7	9	9	9	12	14	16	18	22
AH (JS 15)	32	36	45	50	63	71	90	115	135
AU (± 0.2)	24	28	32	32	41	41	45	60	70
AO (± 0.2)	11	8	15	13	14	16	25	15	30
E	45	52	65	75	95	115	140	180	220
AT	4	4	5	5	6	6	8	9	12
SA	142	161	170	185	210	220	250	300	320
TG	32,5	38	46,5	56,5	72	89	110	140	175
TR (JS 14)	32	36	45	50	63	75	90	115	135
XA	144	163	175	190	215	230	270	320	345
Weight g	65	80	170	190	380	452	1090	1190	3450

Front clevis (not specified by ISO-VDMA standards)

Ordering code	
Aluminium:	**1380.Ø.08F**
Steel:	**1320.Ø.19F**

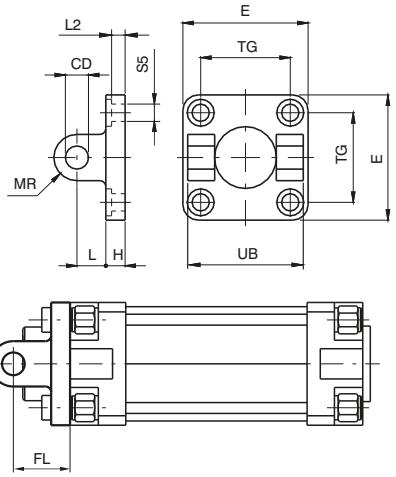

Used to mount the cylinder either parallel or at a right angle to the mounting plane; allows the cylinder to self-align under load. Made of aluminium alloy or steel (see ordering code) and painted black.

Bore		32	40	50	63	80	100	125	160	200
CD (H9)		10	12	12	16	16	20	25	30	30
E	Aluminium	45	52	65	75	95	115	140	180	220
	Steel	45	55	65	75	95	115	140	180	220
FL (±0,2)		22	25	27	32	36	41	50	55	60
H	Aluminium	9	9	11	11	14	14	20	20	25
	Steel	10	10	10	12	14	16	20	20	20
L	Aluminium	13	16	16	21	22	27	30	35	35
	Steel	12	15	17	20	22	25	30	35	40
MR		10	12	12	16	16	20	25	25	25
TG		32,5	38	46,5	56,5	72	89	110	140	175
UB (h14)		45	52	60	70	90	110	130	170	170
L2(±0,5)		5,5	5,5	6,5	6,5	10	10	10	10	11
S5 (H13)		6,6	6,6	9	9	11	11	14	18	18
Weight g	Aluminium	50	75	125	190	380	620	1180	1780	2900
	Steel	150	235	340	550	1010	1710	3360	5750	8960

Overall dimensions and technical information are provided solely for informative purposes and may be modified without notice

Rear clevis (MP2)

Ordering code
Aluminium: **1380.Ø.09F** Steel: **1320.Ø.20F**

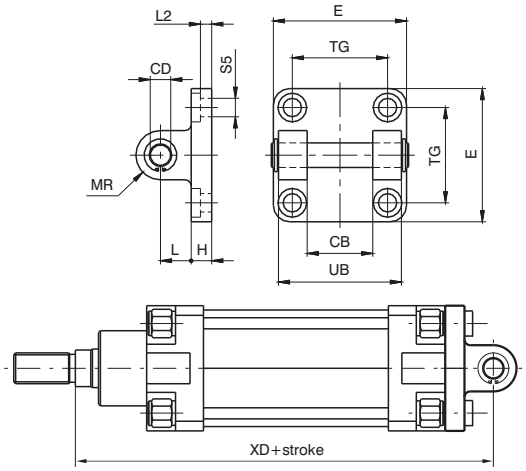

Similar to type 08 but includes a hinge pin. This type of mounting allows anchorage of the cylinder either parallel or right angle to plane; the cylinder rod can oscillate and self-align as necessary when under load. Made of aluminium alloy or steel (see ordering code) and painted black.

Bore		32	40	50	63	80	100	125	160	200
CB (H 14)		26	28	32	40	50	60	70	90	90
CD		10	12	12	16	16	20	25	30	30
E	Aluminium	45	52	65	75	95	115	140	180	220
	Steel	45	55	65	75	95	115	140	180	220
H	Aluminium	9	9	11	11	14	14	20	20	25
	Steel	10	10	10	12	14	16	20	20	20
L	Aluminium	13	16	16	21	22	27	30	35	35
	Steel	12	15	17	20	22	25	30	35	40
MR		10	12	12	16	16	20	25	25	25
TG		32,5	38	46,5	56,5	72	89	110	140	175
UB (h14)		45	52	60	70	90	110	130	170	170
XD		142	160	170	190	210	230	275	315	335
L2(±0,5)		5,5	5,5	6,5	6,5	10	10	10	10	11
S5		6,6	6,6	9	9	11	11	14	18	18
Weight	Aluminium	80	130	185	310	530	910	1710	2760	3820
g	Steel	180	290	400	670	1160	2000	3890	6730	9880

Rear male clevis (MP4)

Ordering code
Aluminium: **1380.Ø.09/1F** Steel: **1320.Ø.21F**

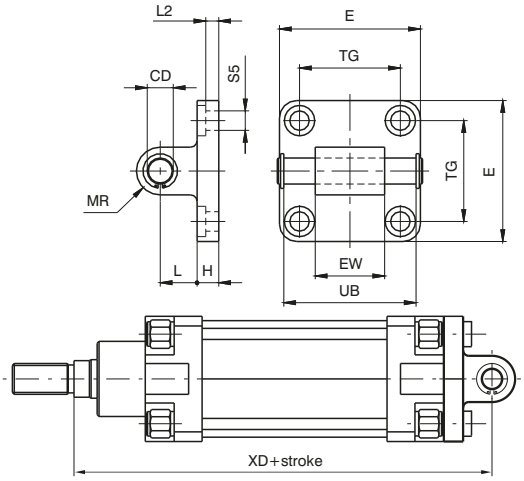

Similar to 09 clevis except for the connection, which is male rather than female. Used to mount the cylinder either parallel or at a right angle to the plane; the cylinder rod can oscillate and self-align as necessary when under load. Made of aluminium alloy or steel (see ordering code) and painted black.

Bore		32	40	50	63	80	100	125	160	200
CD		10	12	12	16	16	20	25	30	30
E	Aluminium	45	52	65	75	95	115	140	180	220
	Steel	45	55	65	75	95	115	140	180	220
EW		$26^{-0,2}_{-0,6}$	$28^{-0,2}_{-0,6}$	$32^{-0,2}_{-0,6}$	$40^{-0,2}_{-0,6}$	$50^{-0,2}_{-0,6}$	$60^{-0,2}_{-0,6}$	$70^{-0,5}_{-1,2}$	$90^{-0,5}_{-1,2}$	$90^{-0,5}_{-1,2}$
H	Aluminium	9	9	11	11	14	14	20	20	25
	Steel	10	10	10	12	14	16	20	20	20
L	Aluminium	13	16	16	21	22	27	30	35	35
	Steel	12	15	17	20	22	25	30	35	40
MR		10	12	12	16	16	20	25	25	25
TG		32,5	38	46,5	56,5	72	89	110	140	175
UB $(^{0,5}_{-0})$		46	53	61	71	91	111	132	171,5	171,5
XD		142	160	170	190	210	230	275	315	335
L2 (±0.5)		5,5	5,5	6,5	6,5	10	10	10	10	11
S5		6,6	6,6	9	9	11	11	14	18	18
Weight	Aluminium	90	130	190	340	580	960	1890	2830	3940
g	Steel	210	330	430	810	1350	2400	4300	6880	8560

Simple rear trunnion with support brackets (not specified by ISO-VDMA standards)

Ordering code
Aluminium: **1380.Ø.11F** Counter clevis can be ordered separately with code1320.Ø.11/1F

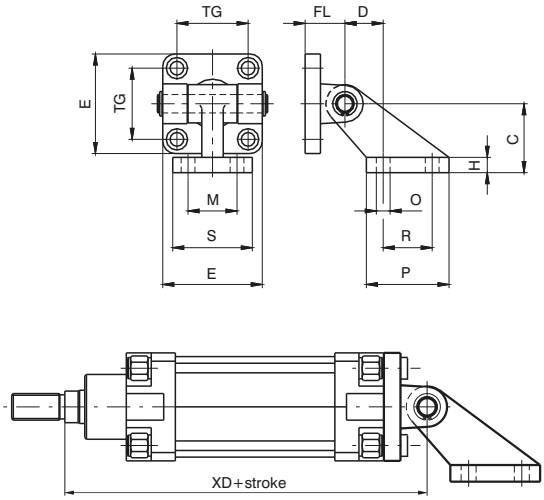

Used to mount cylinders parallel to the plane to which the counter clevis is attached. Allows self-alignment of the cylinder rod under load with an oscillation up to 90 degrees from the mounting plane.

Bore	32	40	50	63	80	100	125	160	200
C (±0,2)	32	45	45	63	63	90	90	140	140
D (±0,5)	18	25	25	32	32	40	40	50	50
E	45	52	65	75	95	115	140	180	220
H	8	10	10	12	12	17	17	20	20
FL	22	25	27	32	36	41	50	55	60
M (JS 14)	25	32	32	40	40	50	50	63	63
TG	32,5	38	46,5	56,5	72	89	110	140	175
O (H 13)	7	9	9	11	11	14	14	18	18
P	37	54	54	75	75	103	103	154	154
R (JS 14)	20	32	32	50	50	70	70	110	110
S	41	52	52	63	63	80	80	110	110
XD	142	160	170	190	210	230	275	315	335
Weight g	130	260	330	600	820	1560	2530	4735	5795

Square angle trunnion

Ordering code
Aluminium: **1380.Ø.35F** Counter clevis can be ordered separately with code1320.Ø.11/2F Steel: **1320.Ø.23F** (Ø32-Ø100) Counter clevis can be ordered separately with code1320.Ø.24F

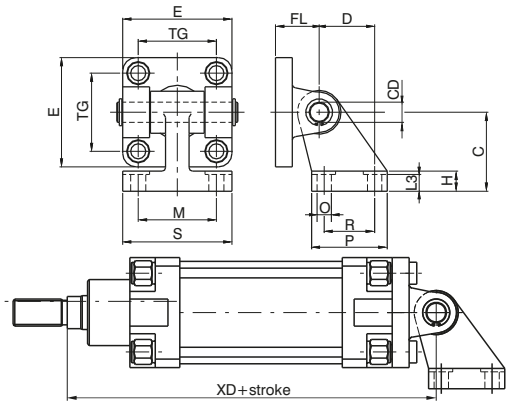

Bore		32	40	50	63	80	100	125	160	200
E	Aluminium	45	52	65	75	95	115	140	180	220
	Steel	45	55	65	75	95	115	140	180	220
TG		32,5	38	46,5	56,5	72	89	110	140	175
FL		22	25	27	32	36	41	50	55	60
D (JS14)		21	24	33	37	47	55	70	97	105
CD		10	12	12	16	16	20	25	30	30
C (JS15)		32	36	45	50	63	71	90	115	135
H	Aluminium	8	10	12	14	14	17	20	25	30
	Steel	8	10	12	12	14	15	/	/	/
L3	Aluminium	6,4	8,4	10,4	12,4	11,5	14,5	16,8	21	26
	Steel	6,5	8,5	10,5	10,5	11,5	12,5	/	/	/
R (JS14)		18	22	30	35	40	50	60	88	90
P		31	35	45	50	60	70	90	126	130
O (H13)		6,6	6,6	9	9	11	11	14	14	18
S		51	54	65	67	86	96	124	156	162
M (JS14)		38	41	50	52	66	76	94	118	122
XD		142	160	170	190	210	230	275	315	335
Weight g	Aluminium	120	180	225	435	730	1220	2325	3780	4950
	Steel	340	500	640	1250	2100	3500	/	/	/

Overall dimensions and technical information are provided solely for informative purposes and may be modified without notice

Standard trunnion (not specified by ISO-VDMA standards)

Ordering code
Aluminium: **1380.Ø.10F**

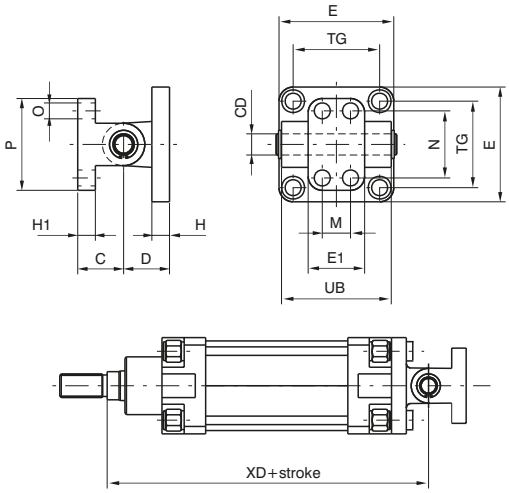

Mounting consists of clevis 09 and counter clevis. Used to mount cylinders at a right angle to the plane to which the counter clevis is attached. Allows self-alignment of the cylinder rod under load with an oscillation of ± 60 degrees.

Bore	32	40	50	63	80	100	125	160	200
C (±0.2)	18	26	26	34	34	41	41	55	55
CD	10	12	12	16	16	20	25	30	30
D	22	25	27	32	36	41	50	55	60
E	45	52	65	75	95	115	140	180	220
E1	25	32	32	46	46	56	56	71	71
H	10	10	12	12	16	16	20	20	25
H1	8	10	10	12	12	16	16	20	20
M (±0.2)	-	16	16	25	25	32	32	43	43
N (±0.2)	28	38	38	54	54	90	90	150	150
O	7	9	9	11	11	14	14	18	18
P	40	52	52	75	75	115	115	180	180
TG	32.5	38	46.5	56.5	72	89	110	140	175
UB	45	52	60	70	90	110	130	170	170
XD	142	160	170	190	210	230	275	315	335
Weight g	110	190	240	490	710	1290	2090	3690	4810

Rear narrow clevis

Ordering code
Aluminium: **1380.Ø.30F** Steel: **1320.Ø.29F** (Ø32 ... Ø125)

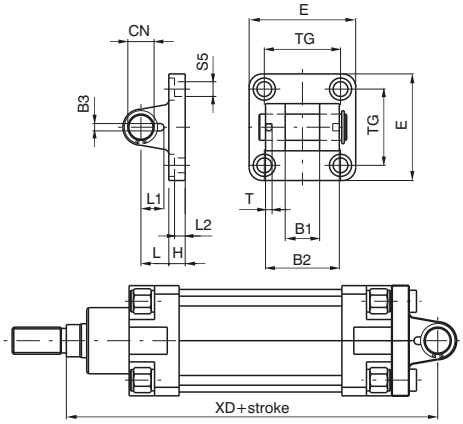

Utilised with clevis 15F allows the cylinder to oscillate in all directions. Made of aluminium alloy or steel (see ordering code) and painted black.

Bore		32	40	50	63	80	100	125	160	200
B1 (H 14)		14	16	21	21	25	25	37	43	43
B2 (d 12)		34	40	45	51	65	75	97	122	122
B3 ($^{+0,2}_{-0}$)		3,3	4,3	4,3	4,3	4,3	6,3	6,3	6,3	6,3
CN		10	12	16	16	20	20	30	35	35
E	Aluminium	45	52	65	75	95	115	140	180	220
	Steel	45	55	65	75	95	115	140	180	220
H	Aluminium	9	9	11	11	14	14	20	20	25
	Steel	10	10	10	12	14	16	20	/	/
L	Aluminium	13	16	16	21	22	27	30	35	35
	Steel	12	15	17	20	22	25	30	/	/
L1		11,5	12	14	14	16	16	24	26,5	26,5
L2 (±0,5)		5,5	5,5	6,5	6,5	10	10	10	10	11
S5		6,6	6,6	9	9	11	11	14	18	18
T		3	4	4	4	4	4	6	6	6
TG		32,5	38	46,5	56,5	72	89	110	140	175
XD		142	160	170	190	210	230	275	315	335
Weight g	Aluminium	70	115	200	290	570	820	1710	3010	4380
	Steel	160	270	370	670	1110	2100	4150	/	/

Rear male clevis (with jointed head according to DIN 648K standard)

Ordering code
Aluminium: **1380.Ø.15F** Steel: **1320.Ø.25F**(Ø32 ... Ø125)

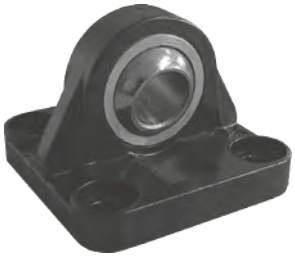

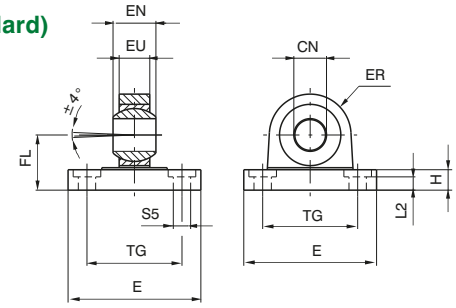

Utilised with clevis 30F allows the cylinder to oscillate in all directions. Made of aluminium alloy or steel (see ordering code) and painted black.

Bore		32	40	50	63	80	100	125	160	200
CN (H 7)		10	12	16	16	20	20	30	35	35
E	Aluminium	45	52	65	75	95	115	140	180	220
	Steel	45	55	65	75	95	115	140	180	220
EN (-0.1)		14	16	21	21	25	25	37	43	43
ER	Aluminium	16	19	21	24	28.5	30	40	45	48
	Steel	15	18	20	23	27	30	40	/	/
EU		10.5	12	15	15	18	18	25	28	28
FL (JS 15)		22	25	27	32	36	41	50	55	60
H	Aluminium	9	9	11	11	14	14	20	20	25
	Steel	10	10	10	12	14	16	20	/	/
L2 (±0.5)		5.5	5.5	6.5	6.5	10	10	10	10	11
S5		6.6	6.6	9	9	11	11	14	18	18
TG		32.5	38	46.5	56.5	72	89	110	140	175
XD		142	160	170	190	210	230	275	315	335
Weight	Aluminium	60	100	180	245	480	650	1410	2420	3840
g	Steel	210	310	400	710	1350	2400	4000	/	/

Complete standard trunnion (with joined head according to DIN 648K standards)

Ordering code
Aluminium: **1380.Ø.36F** Counter clevis can be ordered separately with code 1380.Ø.15F Steel: **1320.Ø.26F** (Ø32-Ø125) Counter clevis can be ordered separately with code 1320.Ø.25F

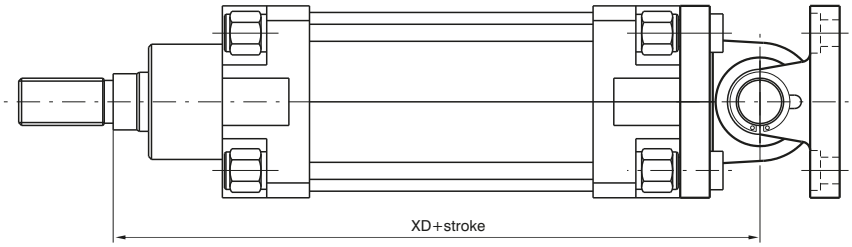

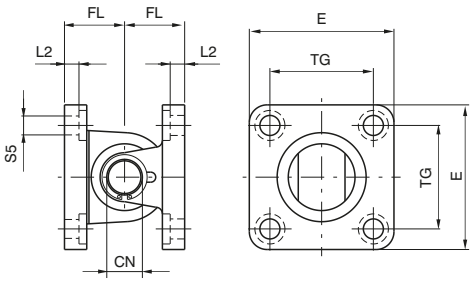

Bore		32	40	50	63	80	100	125	160	200
CN		10	12	16	16	20	20	30	35	35
E	Aluminium	45	52	65	75	95	115	140	180	220
	Steel	45	55	65	75	95	115	140	180	220
FL (JS 15)		22	25	27	32	36	41	50	55	60
L 2 (±0.5)		5.5	5.5	6.5	6.5	10	10	10	10	11
S5		6.6	6.6	9	9	11	11	14	18	18
TG		32.5	38	46.5	56,5	72	89	110	140	175
XD		142	160	170	190	210	230	275	315	335
Weight	Aluminium	130	215	380	535	1050	1470	3120	5430	8220
g	Steel	380	580	770	1380	2460	4500	8150	/	/

Overall dimensions and technical information are provided solely for informative purposes and may be modified without notice

Standard complete trunnion

Ordering code
Aluminium: **1380.Ø.22F** Mounting consists of rear clevis code 1380.Ø.09F + rear male clevis code1380.Ø.09/1F (ordering separately) Steel: **1320.Ø.22F** Mounting consists of rear clevis code 1320.Ø.20F + rear male clevis code 1320.Ø.21F (ordering separately)

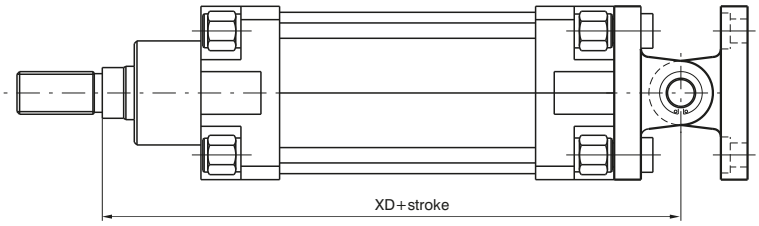

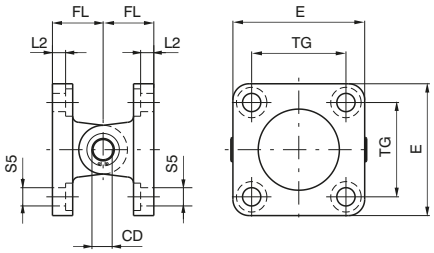

Bore	32	40	50	63	80	100	125	160	200
CD	10	12	12	16	16	20	25	30	30
E	45	55	65	75	95	115	140	180	220
FL	22	25	27	32	36	41	50	55	60
L 2 (±0.5)	5,5	5,5	6,5	6,5	10	10	10	10	11
S 5	6,6	6,6	9	9	11	11	14	18	18
TG	32,5	38	46,5	56,5	72	89	110	140	175
XD	142	160	170	190	210	230	275	315	335
Weight g	360	580	780	1370	2370	4110	7670	12650	17480

Complete square angle trunnion (with joined head according to DIN 648K standards)

Ordering code
Steel: **1320.Ø.27F** Mounting consists of rear clevis narrow code 1320.Ø.29F + simple counter clevis code 1320.Ø.28F (ordering separately)

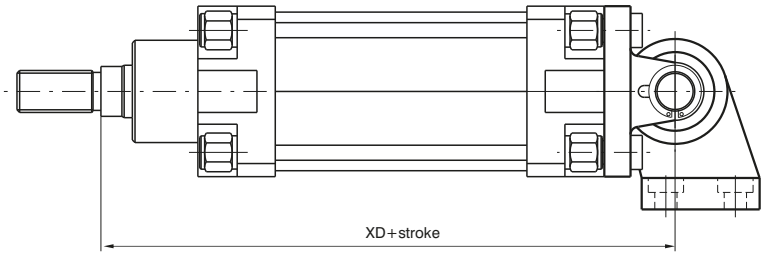

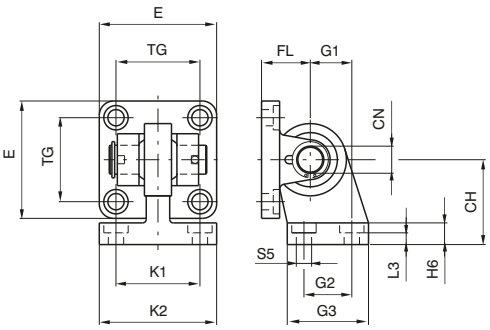

Bore	32	40	50	63	80	100	125
CH (JS 15)	32	36	45	50	63	71	90
CN	10	12	16	16	20	20	30
E	45	55	65	75	95	115	140
FL (JS 15)	22	25	27	32	36	41	50
G1 (JS 15)	21	24	33	37	47	55	70
G2 (JS 14)	18	22	30	35	40	50	60
G3	31	35	45	50	60	70	90
H6	10	10	12	12	14	15	20
K1 (JS 14)	38	41	50	52	66	76	94
K2	51	54	65	67	86	96	124
L3 ($^{+0,5}_{0}$)	8,5	8,5	10,5	10,5	11,5	12,5	17
S5	6,6	6,6	9	9	11	11	14
TG	32,5	38	46,5	56,5	72	89	110
XD	142	160	170	190	210	230	275
Weight g	330	480	830	1220	2100	3580	7000

Intermediate trunnion Series 1319 - 1321

Ordering code
Steel: **1320.Ø.12F**

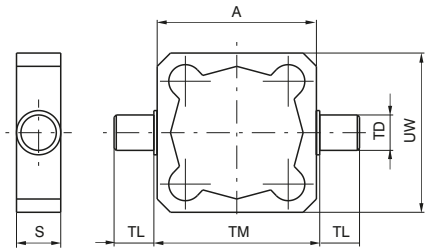

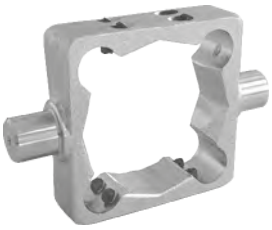

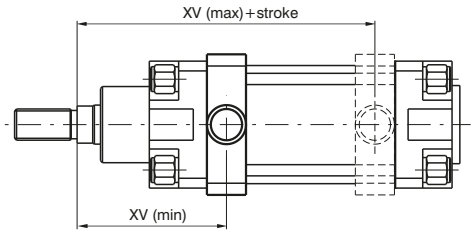

Clevis to be mounted on the barrel to have the centre of rotation of the hinge pin at a point between the end caps of the cylinder. It is attached to the barrel by means of eight pointed grains that block in the "V" groove of the four protruding shapes. In the case of anchorage subject to heavy use, it is recommended to connect the clevis once the right position has been found.
Attention: mounting of the clevis with contact to the end plates does not allow the use of the magnetic sensors as the switch limits.

Bore	32	40	50	63	80	100	125	160	200
A	49	62	73	87	109	130	155	190	240
S	18	21	21	27	27	32	32	40	40
TD (e9)	12	16	16	20	20	25	25	32	32
TL (h14)	12	16	16	20	20	25	25	32	32
TM (h14)	50	63	75	90	110	132	160	200	250
UW	59	62	73	87	109	130	155	190	240
XV (max.)	85	96	102	109	123.5	131.5	162	193	204
XV (min.)	61	69	78	86	96.5	108.5	128	150	168
Weight g	180	270	330	650	890	1550	1950	3580	5850

Intermediate trunnion Series 1386 - 1388 - 1396 - 1398

Ordering code
Steel: **1386.Ø.12F**

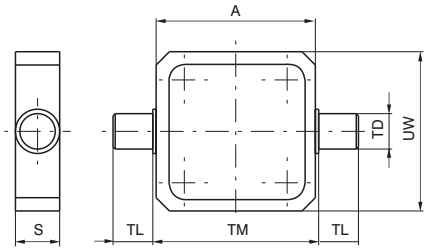

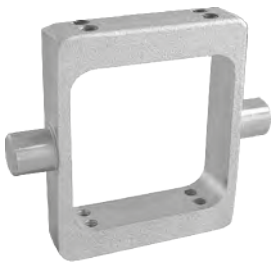

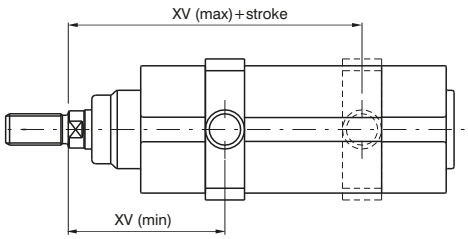

Clevis to be mounted on the barrel to have the centre of rotation of the hinge pin at a point between the end caps of the cylinder. It is attached to the barrel by means of eight pointed grains. In the case of anchorage subject to heavy use, it is recommended to connect the clevis once the right position has been found.

Attention: mounting of the clevis with contact to the end plates does not allow the use of the magnetic sensors as the switch limits.

Bore	32	40	50	63	80	100
A	49.8	62.6	74.1	89.1	109.1	130.1
S	18	21	21	27	27	30
TD (e 9)	12	16	16	20	20	25
TL (h 14)	12	16	16	20	20	25
TM (h 14)	50	63	75	90	110	132
UW	70	78	91	94	130	145
XV (max.)	80	91.5	97.5	106.5	118.5	127
XV (min.)	66	73.5	82.5	88.5	101.5	113
Weight g	195	350	430	565	1035	1450

Overall dimensions and technical information are provided solely for informative purposes and may be modified without notice

Intermediate trunnion Series 1319 - 1321

Ordering code
1320.Ø.12BF (Aluminium with steel bushes)

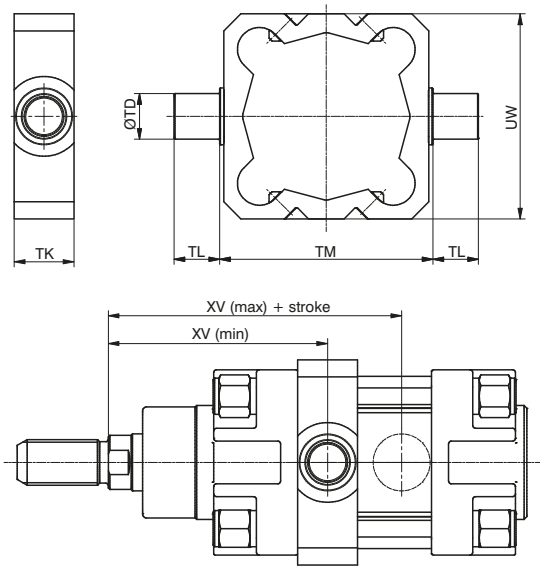

Aluminium Intermediate Trunnion with steel bushes to be mounted on the barrel. This solution allows the cylinder to rotate around the hinge which can be mounted in any position between the end caps. It is attached to the barrel by means of 8 grub screws which secure the Trunnion to the extruded barrel. In the case of heavy duty applications it is recommended that the Trunnion is secured using expansion pins.
In case off applications with high speed, high load and high pressure please contact our technical office.
Please note: If the Trunnion is mounted in direct contact with the cylinder end cap, it will not be possible to fit magnetic sensors at the end of stroke.

Bore	32	40	50	63	80	100
TD	Ø12	Ø16	Ø16	Ø20	Ø20	Ø25
TL	12	16	16	20	20	25
TM	50	63	75	90	110	132
TK	18	21	21	27	27	32
UW	54	60	72	87	109	130
XV min.	61	69	78	86	96.5	108.5
XV max.	85	96	102	109	123.5	131.5
Weight g	70	110	140	280	370	630

Intermediate trunnion Series 1390 - 1392

Ordering code
1390.Ø.12F (Aluminium with steel bushes)

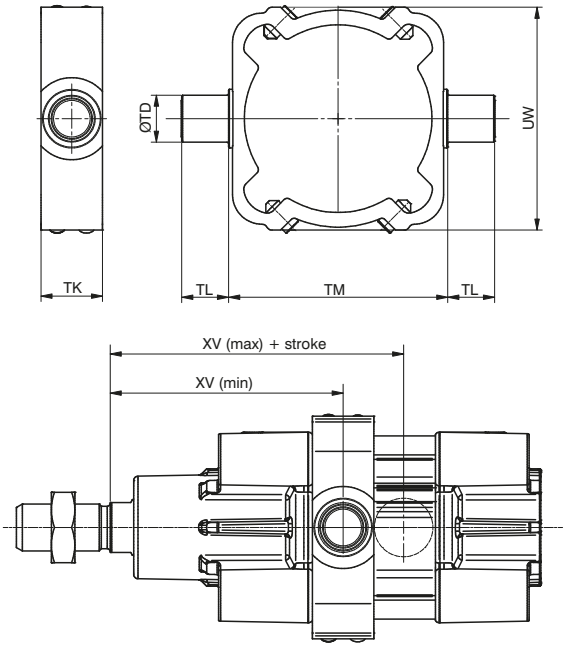

Aluminium Intermediate Trunnion with steel bushes to be mounted on the barrel. This solution allows the cylinder to rotate around the hinge which can be mounted in any position between the end caps. It is attached to the barrel by means of 8 grub screws which secure the Trunnion to the extruded barrel. In the case of heavy duty applications it is recommended that the Trunnion is secured using expansion pins.
In case off applications with high speed, high load and high pressure please contact our technical office.
Please note: If the Trunnion is mounted in direct contact with the cylinder end cap, it will not be possible to fit magnetic sensors at the end of stroke 1500._, RS._, HS._ series.

Bore	32	40	50	63	80	100
TD	Ø12	Ø16	Ø16	Ø20	Ø20	Ø25
TL	12	16	16	20	20	25
TM	53*	63	75	90	110	132
TK	18	21	21	27	27	32
UW	56	64	76	92	112	134
XV min.	65	74	80	87	99	109
XV max.	81	91	100	108	121	130.5
Weight g	60	100	125	240	320	540

* (Ø32, TM: not according to standard ISO 15552

Support for intermediate trunnion

Ordering code
1320.Ø.12/1F (1 piece)

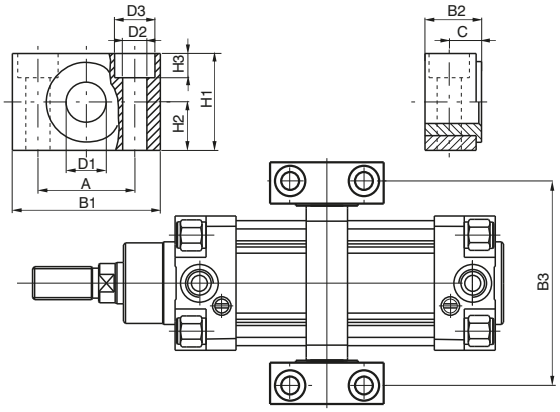

Combining two supports to the intermediate trunnion it is possible to fix the cylinder on plane surface.

Bore	32	40	50	63	80	100	125	160	200
A (±0.2)	32	36	36	42	42	50	50	60	60
B1	46	55	55	65	65	75	75	92	92
B2	18	21	21	23	23	28.5	28.5	40	40
B3	71	87	99	116	136	164	192	245	295
C	10.5	12	12	13	13	16	16	22.5	22.5
D1 (F7)	12	16	16	20	20	25	25	32	32
D2	6.6	9	9	11	11	14	14	18	18
D3	11	15	15	18	18	20	20	26	26
H1	30	36	36	40	40	50	50	60	60
H2 (±0.1)	15	18	18	20	20	25	25	30	30
H3	7	9	9	11	11	13	13	17	17
Weight g (1 piece)	100	150	150	235	235	435	435	850	850

Rod forks and nuts

Ordering code
1320.Ø.13F
1320.Ø.13/1F (from ø32 to ø100)
1320.Ø.18F

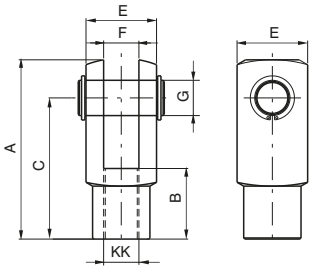

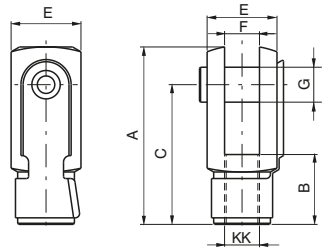

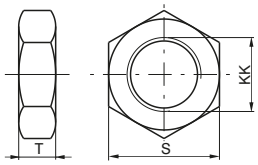

Fork:
Element that when screwed to the rod consents a regular functioning even when there are significant lateral forces as the connection point. Made of zinc-plated steel.
Nut:
Used to block the position of the fork.

Bore		32	40	50	63	80	100	125	160	200
A		52	62	83	83	105	105	148	188	188
B		20	24	32	32	40	40	56	72	72
C		40	48	64	64	80	80	110	144	144
E		20	24	32	32	40	40	55	70	70
F(B12)		10	12	16	16	20	20	30	35	35
G		10	12	16	16	20	20	30	35	35
S		17	19	24	24	30	30	41	55	55
T		6	7	8	8	9	9	12	18	18
KK		M10X1.25	M12X1.25	M16X1.5	M16X1.5	M20X1.5	M20X1.5	M27X2	M36X2	M36X2
Weight	forks	100	140	340	340	680	680	2500	4000	4000
g	nut	15	20	20	20	40	40	100	210	210

Overall dimensions and technical information are provided solely for informative purposes and may be modified without notice

Ball joint

Ordering code
1320.Ø.32F

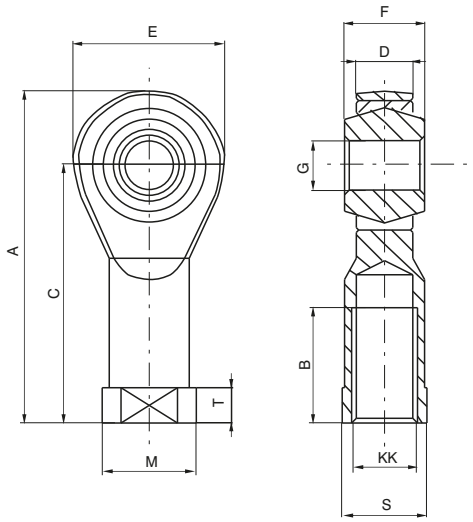

Bore	32	40	50	63	80	100	125	160	200
A	57	66	85	85	102	102	145	165	165
B	20	22	28	28	33	33	51	56	56
C	43	50	64	64	77	77	110	125	125
D (-0.1)	10.5	12	15	15	18	18	25	28	28
E	28	32	42	42	50	50	70	80	80
F	14	16	21	21	25	25	37	43	43
G (H 7)	10	12	16	16	20	20	30	35	35
KK	M10x1.25	M12x1.25	M16x1.5	M16x1.5	M20x1.5	M20x1.5	M27x2	M36x2	M36x2
M	19	22	27	27	34	34	50	58	58
S	17	19	22	22	30	30	41	50	50
T	6.5	6.5	8	8	10	10	15	17	17
Weight g	76	110	220	220	410	410	1200	1600	1600

Self-aligning joint

Ordering code
1320.Ø.33F

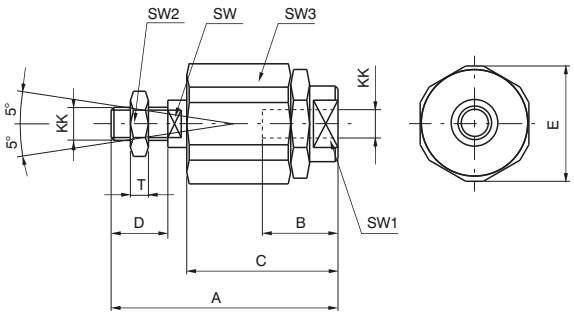

Bore	32	40	50	63	80	100
A	71	75	103	103	119	119
B	20	20	32	32	40	40
C	46	46	63	63	71	71
D	20	24	32	32	40	40
E	32	32	45	45	45	45
KK	M10x1.25	M12x1.25	M16x1.5	M16x1.5	M20x1.5	M20x1.5
SW	12	12	20	20	20	20
SW1	19	19	27	27	27	27
SW2	17	19	24	24	30	30
SW3	30	30	41	41	41	41
T	6	7	8	8	9	9
Weight g	220	230	660	660	700	700

Series 1315, Round tube with tie rod cylinders - Ø250 / Ø320

General

Tie rod cylinders, according to standard ISO15552.

Construction characteristics

End caps	aluminium alloy casting
Rod	C43 chromed steel
Barrel	oxidised aluminium
Tie rod	steel with rolled threads
Cushion bushings	aluminium
Rod-guide bushing	sintered bronze
Piston	aluminium
Seals	Standard: NBR oil resistant rubber, PUR piston rod seals

Operational characteristics

Fluid	filtered and lubricated air - hydraulic oil (with special bushing)
Pressure	max. 12 bar
Operating temperature	-5 °C - +70 °C
Cushioning length	50 mm

Please follow the suggestions below to ensure a long life for these cylinders:
• use clean and lubricated air
• correct alignment during assembly with regard to the applied load so as to avoid radial components or bending the rod.
• avoid high speeds together with long strokes and heavy loads: this would produce kinetic energy which the cylinder cannot absorb, especially if used as a limit stop (in this case use mechanical stop device);
• evaluate the environmental characteristics of cylinder used (high temperature, hard atmosphere, dust, humidity etc.)

Please note: air must be dried for applications with lower temperature.
Use hydraulic oils H class (ISO VG32) for correct continued lubrication.
Our Technical Department will be glad to help.

Overall dimensions and technical information are provided solely for informative purposes and may be modified without notice

Basic version

Ordering code	
1315.Ø.stroke.01A magnetic,aluminium barrel	
Ø	**BORE**
	250 = 250 mm
	320 = 320 mm

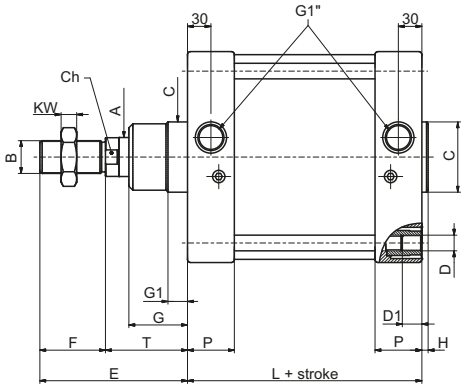

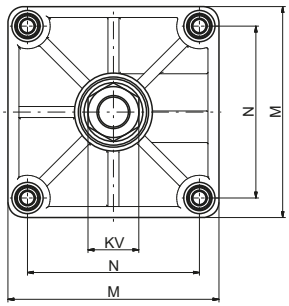

Table of dimensions

BORE	A	B	Ch	C	D	D1	E	F	G	G1	H	KW	KV	L	M	N	P	T	Weight (g)
250	Ø50	M42x2	46	Ø90	M20	25	189	84	75	25	8	21	Es64	200	270	220	60	105	28.170 (increase of 380 g each 10 mm stroke)
320	Ø63	M48x2	55	Ø110	M24	28	216	96	90	25	10	24	Es72	220	350	270	65	120	49.810 (increase of 616 g each 10 mm stroke)

Front and rear flanges

Ordering code	
1315.Ø.03F (Steel)	
Ø	**BORE**
	250 = 250 mm
	320 = 320 mm

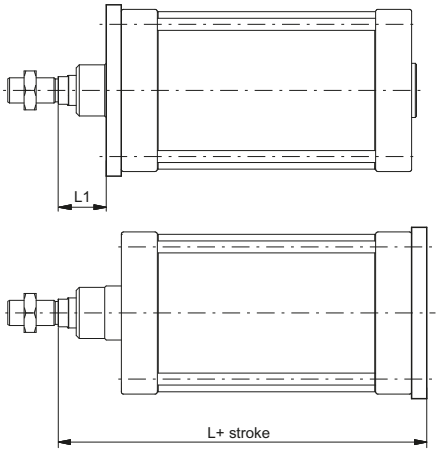

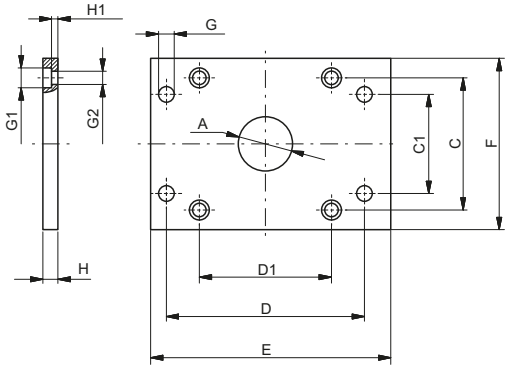

Table of dimensions

BORE	A(H11)	C	C1 (JS14)	D (JS14)	D1	E	F	G (H13)	G1 (H13)	G2 (H13)	H (±0,2)	H1 ($^{+0}_{-0.5}$)	L	L1	Weight (g)
250	90	220	165	330	220	400	285	26	33	22	25	10,5	330	80	20.150
320	110	270	200	400	270	470	350	33	39	26	30	15	370	90	34.000

Rear clevis

Ordering code	
1315.Ø.09F	
Ø	**BORE**
	250 = 250 mm
	320 = 320 mm

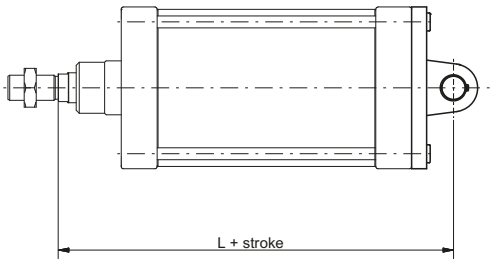

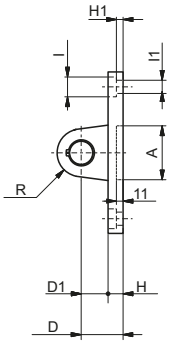

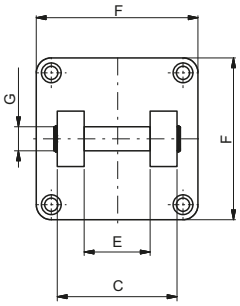

Table of dimensions

BORE	A	C (h14)	D (±0,2)	D1	E (H14)	F	G (H9)	H	H1	I	I1	L	R	Weight (g)
250	Ø90	200	70	45	110	270	40	25	11	33	22	375	40	7.800
320	Ø110	220	80	50	120	350	42,5	30	15	39	26	420	45	13.000

Rear male clevis

Ordering code	
1315.Ø.09/1F	
Ø	**BORE**
	250 = 250 mm
	320 = 320 mm

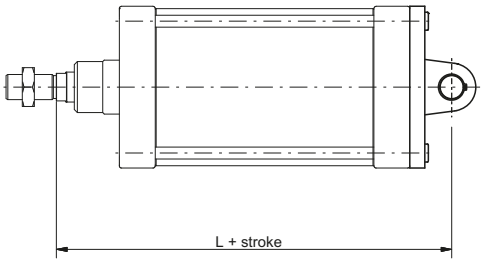

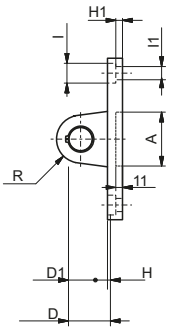

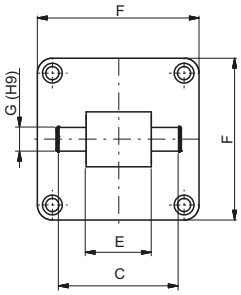

Table of dimensions

BORE	A	C ($^{+0.3}_{-0}$)	D (±0,2)	D1	E ($^{-0.5}_{-1.2}$)	F	G (H9)	H	H1	I	I1	L	R	Weight (g)
250	Ø90	202	70	45	110	270	40	25	11	33	22	375	40	8.300
320	Ø110	222	80	50	120	350	42,5	30	15	39	26	420	45	13.060

Overall dimensions and technical information are provided solely for informative purposes and may be modified without notice

Intermediate trunnion

Ordering code	
1315.Ø.12F (Steel)	
Ø	**Bore**
	250 = 250 mm
	320 = 320 mm

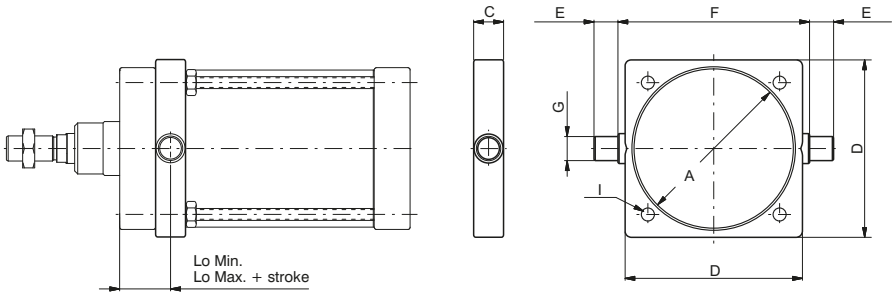

Table of dimensions

BORE	A	C	D	E (h14)	F (h14)	G (e9)	I	Lo Min.	Lo Max.	Weight (g)
250	Ø268	50	295	40	320	Ø40	Ø20,25	85	115 + stroke	10.500
320	Ø343	70	370	50	400	Ø50	Ø24,25	95	125 + stroke	25.300

Fork with pin

Ordering code	
1302.Ø.13F (Steel)	
Ø	**Bore**
	250 = 250 mm
	320 = 320 mm

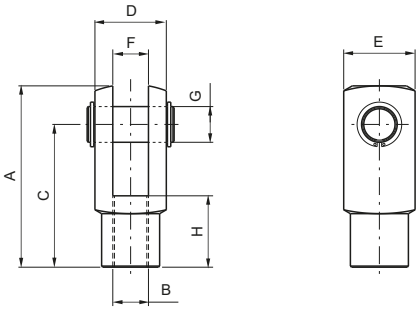

Table of dimensions

BORE	A	B	C	D	E	F	G	H	Weight (g)
250	188	M42x2 (H8)	144	70	70	35 (B12)	Ø35 (H9)	72	3.700
320	265	M48x2	192	96	96	50	Ø50	96	9.700

Rod lock nut

Ordering code	
1302.Ø.18F (Steel)	
Ø	**Bore**
	250 = 250 mm
	320 = 320 mm

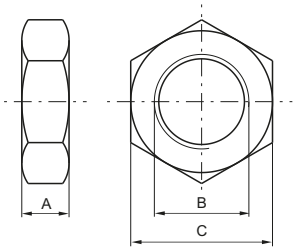

Table of dimensions

BORE	A	B	C	Weight (g)
250	21	M42x2	65	260
320	24	M48x2	72	580

Ball joint

Ordering code	
1302.Ø.32F (Steel)	
Ø	**Bore**
	250 = 250 mm
	320 = 320 mm

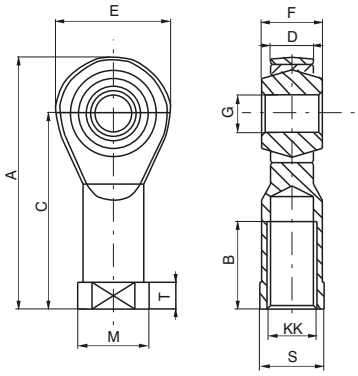

Table of dimensions

BORE	250	320
A	187	218
B	60	65
C	142	162
D (-0.1)	33	45
E	91	117
F	49	60
G (H 7)	40	50
KK	M42x2	M48x2
M	65	75
S	55	65
T	19	23
Weight g.	2.400	5.000

Sensor bracket - codes 1500._,RS._,HS._

Ordering code
1306.D (Ø250)
1306.E (Ø320)

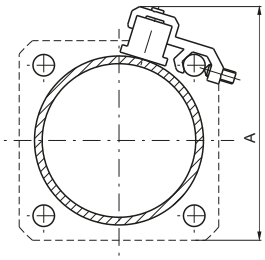

For technical characteristics and Sensors ordering code see "Magnetic sensors" section

Table of dimensions

BORE	A
250	250
320	365

Overall dimensions and technical information are provided solely for informative purposes and may be modified without notice

Series AISI 316 stainless steel - Steel line

General
The 1393-1394 stainless steel ISO 15552 cylinders series are designed for corrosion resistance application such as marine, pharmaceutical and food ambiences.
The pre lubrication grease used is NSF H1 certified for food application.
Specific care has been taken during the design stages and the result is a clean profile cylinder easy to clean and free from possible residue build-up areas.
All parts in contact with the external environment are in Stainless steel 316L and the seals are available in two different compounds for different temperature applications: PUR -30C° - +80 C° and FPM -5°C - +150°C.
The range starts from 32 bore up to 100 bore , round barrel and tie rods design. Double acting version standard or with through rod, magnetic or not magnetic piston available.
The piston is aluminium and the sensor bracket, when required is in stainless steel 316.
The cylinder can be fixed via the threaded holes in the tie rod nuts or with the wide range of stainless steel accessories.

Construction characteristics

End caps, piston rod, barrel, cushion screws	Stainless steel AISI 316
Rod-guide bushings	Stainless steel AISI 316 with P.T.F.E. coat
Half-pistons	Aluminium
Seals	PUR or FPM on request
Lubricating grease	NSF-H1 certified grease for incidental contact with food

Operational characteristics

Fluid	Filtered air. No lubrication needed, if applied it shall be continuous.
Max. pressure	10 bar
Operating temperature	-30° C - +80°C with PUR seals -5° C - +150°C with FPM seals and non magnetic piston -5° C - +80°C with FPM seals and magnetic piston
Bore	Ø 32 - 40 - 50 - 63 - 80 - 100
Cushioning lenght	mm 20 - 20 - 22 - 22 - 32 - 32

Please follow the suggestions below to ensure a long life for these cylinders:
- use clean and lubricated air
- correct alignment during assembly with regard to the applied load so as to avoid radial components or bending the rod.
- avoid high speeds together with long strokes and heavy loads: this would produce kinetic energy which the cylinder cannot absorb, especially if used as a limit stop (in this case use mechanical stop device)
- evaluate the environmental characteristics of cylinder used (high temperature, hard atmosphere, dust, humidity etc.)

Please note: air must be dried for applications with lower temperature.
Our Technical Department will be glad to help.

Standard strokes (for all diameters)

from 0 to 150, every 25 mm
over 150 up to 500, every 50 mm
over 500 up to 1000, every 100

On request are available strokes up to 2800 mm

Stroke tolerance (ISO 15552)

Bore	Stroke	Tolerance
32 - 40 - 50	up to 500	+2 / 0
	over 500 up to 1250	+3.2 / 0
63 - 80 - 100	up to 500	+2.5 / 0
	over 500 up to 1250	+4 / 0

Basic version “01”

Ordering code
1393.Ø.stroke.01 Magnetic **1394.Ø.stroke.01** Non magnetic

This is the configuration representing the basic cylinder according to ISO standards. It can be directly anchored on machine parts using the four threads on the end cap screws. For other applications see the pages about different types of stainless steel fixings.

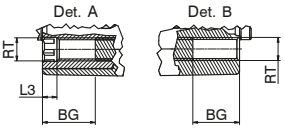

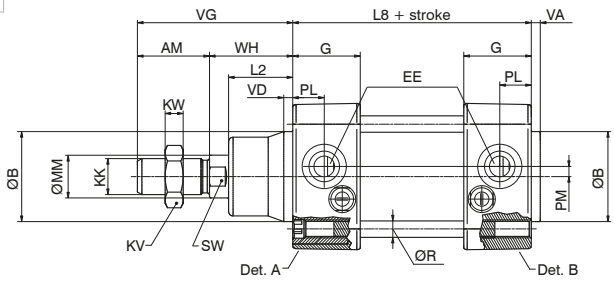

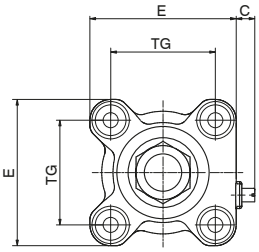

Through rod cylinder version - “02”

Ordering code
1393.Ø.stroke.02 Magnetic **1394.Ø.stroke.02** Non magnetic

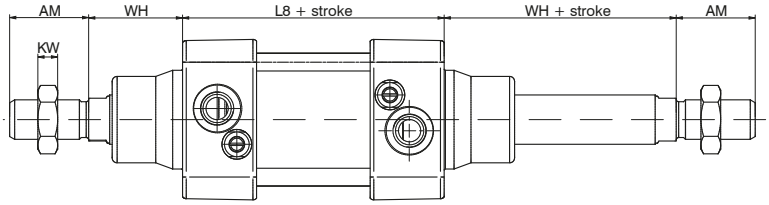

Variants

Version with FPM seals

Ordering code
139_.(93.94) Ø.stroke._ _ V

Table of dimensions

Bore		32	40	50	63	80	100
AM		22	24	32	32	40	40
ØB (d 11)		30	35	40	45	45	55
BG min.		16	16	16	16	18	17
C	min.	4	4	4	4	3,5	3,5
	max.	7.5	7,5	8,5	8,5	9	9
E		47	52	65	76	95	113
EE		G1/8"	G1/4"	G1/4"	G3/8"	G3/8"	G1/2"
G		29	31	30	34	36	40,5
KK		M10X1,25	M12X1,25	M16X1,5	M16X1,5	M20x1,5	M20X1,5
KV		17	19	24	24	30	30
KW		16	7	8	8	9	9
L2		20	22	28,5	29	35	36
L3		4,5	4,5	5	5	6	6
L8		94	105	106	121	128	138
ØMM		12	16	20	20	25	25
PL		13	14	14	16	16	18
PM		3	3,5	4,5	7	8	8
ØR		Ø5,2	Ø5,2	Ø7,1	Ø7,1	Ø8,9	Ø8,9
RT		M6	M6	M8	M8	M10	M10
SW		10	13	17	17	22	22
TG		32,5	38	46,5	56,5	72	89
VA		4	4	4	4	4	4
VD		4	4	4	4	4	4
VG		48	54	69	69	86	91
WH		26	30	37	37	46	51
Weight	stroke 0	1000	1430	2150	3000	4400	6400
g	every 10 mm	35	45	63	80	120	135

Overall dimensions and technical information are provided solely for informative purposes and may be modified without notice

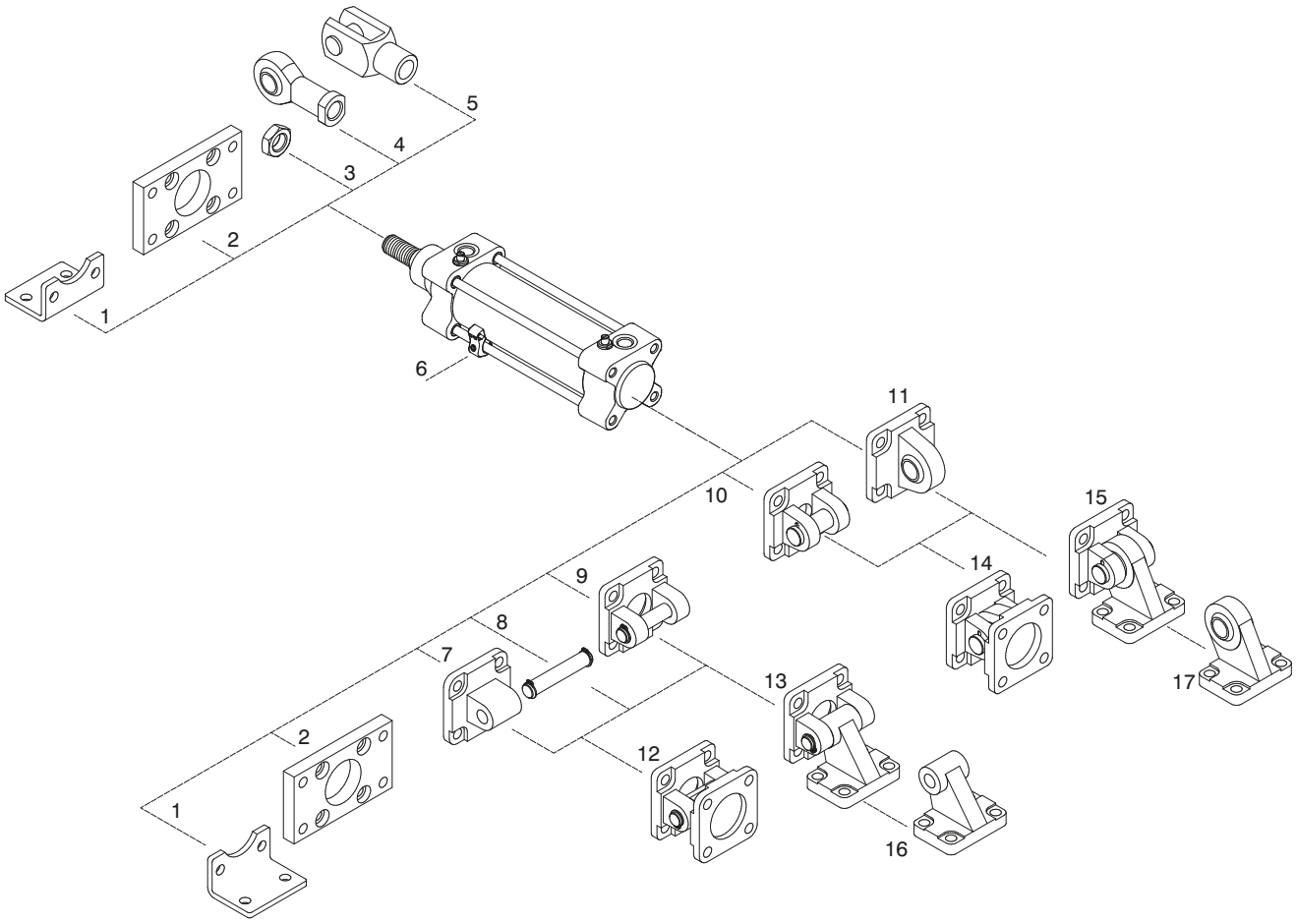

Position	Description	Ordering code	Materials
1	Short mounting foot brackets (MS1)	1393.Ø.05/1F	Stainless steel AISI 316
2	Flange (MF1-MF2)	1393.Ø.03F	Stainless steel AISI 316
3	Rod nut	1393.Ø.18F	Stainless steel AISI 316
4	Ball joint	1393.Ø.32F	Stainless steel
5	Fork	1393.Ø.13F	Stainless steel
6	Sensor bracket	1393._	Stainless steel AISI 316
7	Rear male clevis (MP4)	1393.Ø.09/1F	Stainless steel AISI 316
8	Pin (AA4) with circlips for rear clevis (MP2) (pos. 9)	1393.Ø.37F	Stainless steel AISI 316
9	Rear female clevis (MP2)	1393.Ø.09F	Stainless steel AISI 316
10	Rear narrow clevis (AB6)	1393.Ø.30F	Stainless steel AISI 316
11	Rear male clevis (with jointed head - MP6)	1393.Ø.15F	Stainless steel AISI 316
12	Standard complete trunnion (pos. 7 + pos. 9)	1393.Ø.22F	Stainless steel AISI 316
13	Square angle trunnion (pos. 9 + pos. 16)	1393.Ø.35F	Stainless steel AISI 316
14	Standard complete trunnion with jointed head (pos. 10 + pos.11)	1393.Ø.36F	Stainless steel AISI 316
15	Complete square angle trunnion (pos. 10 + pos.17)	1393.Ø.27F	Stainless steel AISI 316
16	Simple square counter clevis (AB7) (pos. 13)	1393.Ø.11/2F	Stainless steel AISI 316
17	Simple square counter clevis (pos. 15)	1393.Ø.28F	Stainless steel AISI 316

Sensor bracket

Ordering code
1393.A (Ø32 ... Ø40) **1393.B** (Ø50 ... Ø63) **1393.C** (Ø80 ... Ø100)

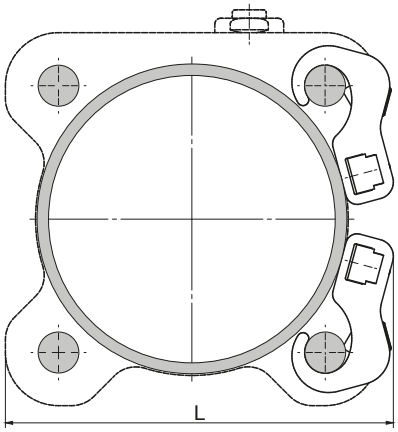

Fixing bracket made of stainless steel AISI 316 for sensor mounting on cylinders.

Sensors cod. **1580._**
MRS._
MHS._

Bore	L
Ø32	51
Ø40	57
Ø50	67
Ø63	79
Ø80	98
Ø100	115

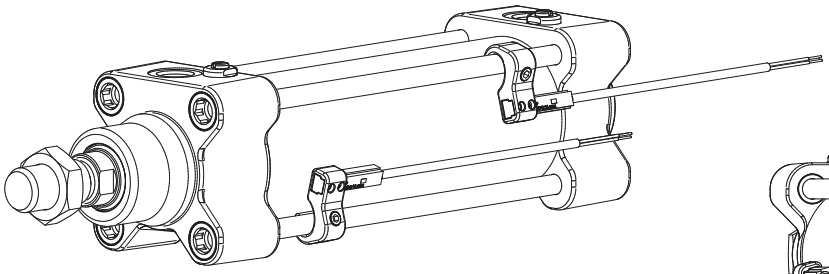

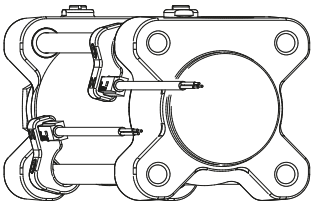

To mount the brackets on the tie rods use the dedicated stainless steel grub screw.

Front and rear flanges (MF1 - MF2)

Ordering code
1393.Ø.03F

Plate in stainless steel AISI 316 which allows anchorage of the cylinder at a right angle to the plane.

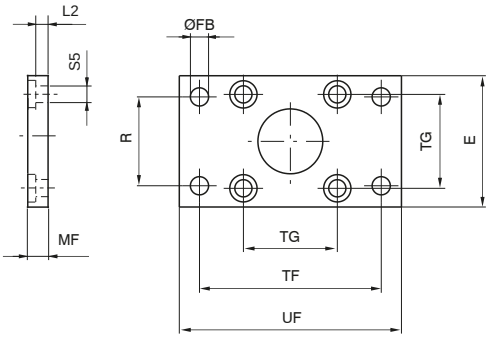

Front assembling

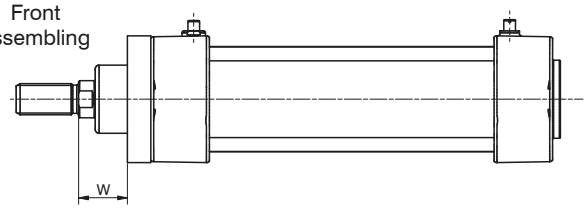

Rear assembling

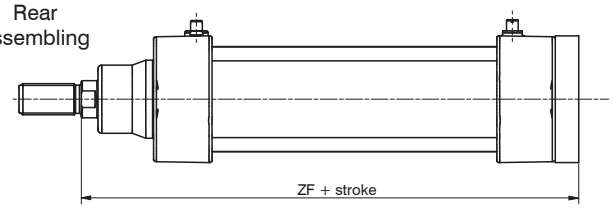

Bore	E	ØFB (H 13)	MF (JS 14)	R (JS 14)	TF (JS 14)	TG	UF	ZF	W	L2	ØS5	Weight (g)
32	45	7	10	32	64	32,5	80	130	16	5	6,6	190
40	52	9	10	36	72	38	90	145	20	5	6,6	250
50	65	9	12	45	90	46,5	110	155	25	6,5	9	480
63	75	9	12	50	100	56,5	120	170	25	6,5	9	620
80	95	12	15	63	126	72	150	189	31	7	11	1430
100	115	14	15	75	150	89	170	204	36	7	11	1990

Overall dimensions and technical information are provided solely for informative purposes and may be modified without notice

Short mounting foot brackets (MS1)

Ordering code
1393.Ø.05/1F

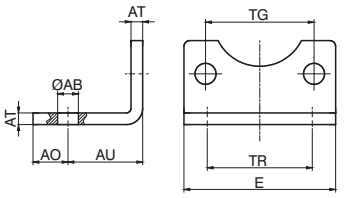

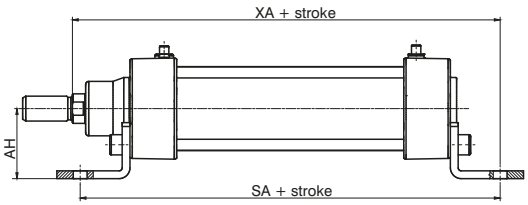

Elements used to anchor the cylinder parallel to the mounting plane. They are made of stainless steel AISI 316.

Bore	32	40	50	63	80	100
ØAB (H 14)	7	9	9	9	12	14
AH	32	36	45	50	63	71
AU (± 0.2)	24	28	32	32	41	41
AO	11	8	15	13	14	16
E	45	52	65	75	95	115
AT	4	4	5	5	6	6
SA	142	161	170	185	210	220
TG	32,5	38	46,5	56,5	72	89
TR (JS 14)	32	36	45	50	63	75
XA	144	163	175	190	215	230
Weight g	60	70	160	180	370	430

Rear clevis (MP2)

Ordering code
1393.Ø.09F

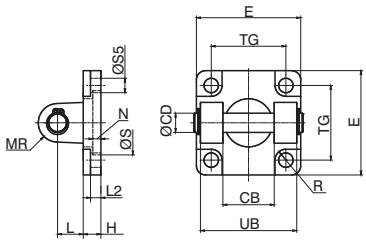

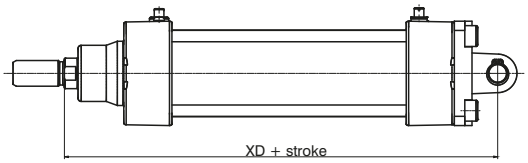

This type of mounting allows anchorage of the cylinder either parallel or right angle to plane; the cylinder rod can oscillate and self-align as necessary when under load. Made of stainless steel AISI 316.

Bore	32	40	50	63	80	100
CB (H 14)	26	28	32	40	50	60
ØCD	10	12	12	16	16	20
E	45	55	65	75	95	115
ØS (H11)	30	35	40	45	45	55
N	5	5	5	5	/	/
R (H13)	5,5	5,5	7,5	7,5	9	9
H	10	10	10	12	14	16
L	12	15	17	20	22	25
MR	10	12	12	16	16	20
TG	32,5	38	46,5	56,5	72	89
UB (h14)	45	52	60	70	90	110
XD	142	160	170	190	210	230
L2 (±0,5)	5,5	5,5	6,5	6,5	10	10
S5 (H13)	6,6	6,6	9	9	11	11
Weight g	140	230	370	540	1000	1700

Rear male clevis (MP4)

Ordering code
1393.Ø.09/1F

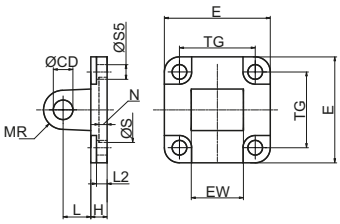

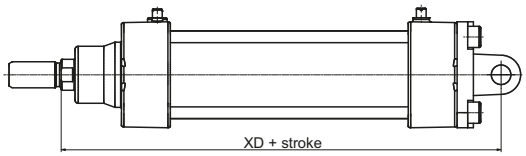

Similar to 09 clevis except for the connection, which is male rather than female. Used to mount the cylinder either parallel or at a right angle to the plane; the cylinder rod can oscillate and self-align as necessary when under load. Made of stainless steel AISI 316.

Bore	32	40	50	63	80	100
CD (H 9)	10	12	12	16	16	20
E	45	55	65	75	95	115
EW ($^{-0,2}_{-0,6}$)	26	28	32	40	50	60
H	10	10	10	12	14	16
L	12	15	17	20	22	25
ØS (H11)	30	35	40	45	45	55
N	5	5	5	5	/	/
R (H13)	5,5	5,5	7,5	7,5	9	9
MR	10	12	12	16	16	20
TG	32,5	38	46,5	56,5	72	89
XD	142	160	170	190	210	230
L2 (±0,5)	5,5	5,5	6,5	6,5	10	10
S5 (H13)	6,6	6,6	9	9	11	11
Weight g	180	280	370	680	1200	2100

Pin with circlips for rear clevis (MP4 and MP2)

Ordering code
1393.Ø.37F

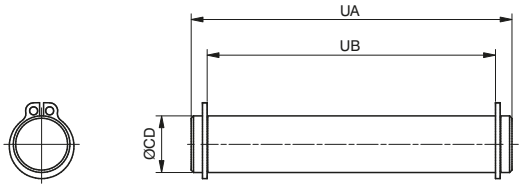

Stainless steel AISI 316 pin, complete with stainless steel circlips, which can be used with clevis code 1393.Ø.09/1F and 1393.Ø.09F

Bore	32	40	50	63	80	100
CD (e8)	10	12	12	16	16	20
UA	53	60	68	78	98	118
UB ($^{-0,5}_{-0}$)	46	53	61	71	91	111
Weight g	35	50	60	120	150	290

Overall dimensions and technical information are provided solely for informative purposes and may be modified without notice

Standard complete trunnion

Ordering code
1393.Ø.22F Mounting consists of rear clevis code 1380.Ø09F +rear male clevis code 1380.Ø.09/1F (ordering separately)

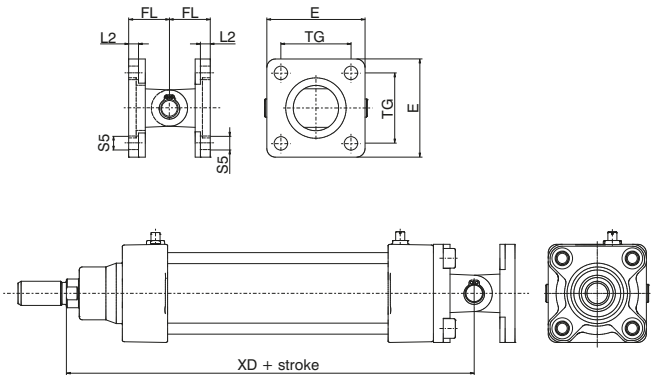

Made of stainless steel AISI 316.

Bore	32	40	50	63	80	100
E	45	55	65	75	95	115
FL	22	25	27	32	36	41
L 2 (±0,5)	5,5	5,5	6,5	6,5	10	10
S 5	6,6	6,6	9	9	11	11
TG	32,5	38	46,5	56,5	72	89
XD	142	160	170	190	210	230
Weight g	360	580	780	1370	2370	4110

Square angle trunnion (AB7)

Ordering code
1393.Ø.35F Counter clevis can be ordered separately with code 1393.Ø.11/2F

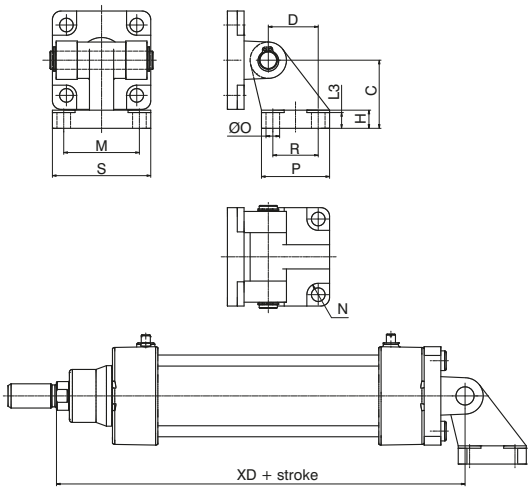

Made of stainless steel AISI 316.

Bore	32	40	50	63	80	100
D (JS 15)	21	24	33	37	47	55
C (JS 15)	32	36	45	50	63	71
H	8	10	12	12	14	15
N (H 13)	5,5	5,5	7,5	7,5	9	9
L3	6,5	8,5	10,5	10,5	11,5	12,5
R (JS 14)	18	22	30	35	40	50
P	31	35	45	50	60	70
O (H 13)	6,6	6,6	9	9	11	11
S	51	54	65	67	86	96
M (JS 14)	38	41	50	52	66	76
XD	142	160	170	190	210	230
Weight g	330	520	810	1200	2200	4710

Rear narrow clevis (AB6)

Ordering code
1393.Ø.30F

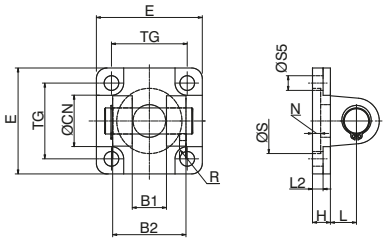

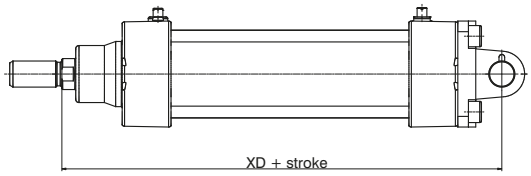

Utilised with clevis 1393.Ø.15F allows the cylinder to oscillate in all directions (see standard complete trunnion 1393.Ø.36F)
Made of stainless steel AISI 316.

Bore	32	40	50	63	80	100
B1 (H 14)	14	16	21	21	25	25
B2 (h 14)	34	40	45	51	65	75
ØCN	10	12	16	16	20	20
E	45	55	65	75	95	115
H	10	10	10	12	14	16
L	12	15	17	20	22	25
L2 (±0,5)	5,5	5,5	6,5	6,5	10	10
S5 (H 13)	6,6	6,6	9	9	11	11
TG	32,5	38	46,5	56,5	72	89
XD	142	160	170	190	210	230
ØS (H 12)	30	35	40	45	45	55
R (H 13)	5,5	5,5	7,5	7,5	9	9
N	5	5	5	5	5	5
Weight g	170	270	420	650	1380	2050

Rear male clevis (MP6) with jointed head according to DIN 648K standard

Ordering code
1393.Ø.15F

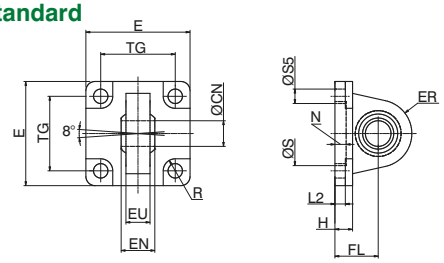

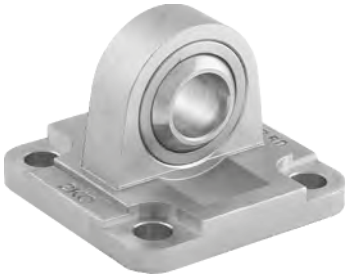

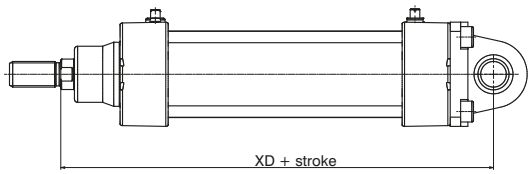

Utilised with clevis 1393.Ø.30F allows the cylinder to oscillate in all directions.
Made of stainless steel AISI 316.

Bore	32	40	50	63	80	100
ØCN (H 7)	10	12	16	16	20	20
E	45	55	65	75	95	115
EN (-0.1)	14	16	21	21	25	25
ER	15	18	20	23	27	30
EU	10,5	12	15	15	18	18
FL (JS 15)	22	25	27	32	36	41
H	10	10	10	12	14	16
L2	5,5	5,5	6,5	6,5	10	10
S5 (H 13)	6,6	6,6	9	9	11	11
TG	32,5	38	46,5	56,5	72	89
XD	142	160	170	190	210	230
ØS (H 11)	30	35	40	45	45	55
R (H 13)	5,5	5,5	7,5	7,5	9	9
N	5	5	5	5	5	5
Weight g	150	260	370	600	1130	1800

Overall dimensions and technical information are provided solely for informative purposes and may be modified without notice

Standard complete trunnion with jointed head according to DIN 648K standard

Ordering code
1393.Ø.36F Mounting consists of rear narrow clevis code 1393.Ø.30F with rear male clevis code 1393.Ø.15F

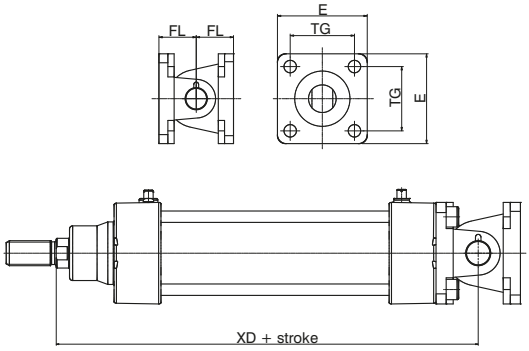

Made of stainless steel AISI 316.

Bore	32	40	50	63	80	100
E	45	55	65	75	95	115
FL (JS 15)	22	25	27	32	36	41
TG	32,5	38	46,5	56,5	72	89
XD	142	160	170	190	210	230
Weight g	320	530	790	1250	2510	3850

Complete square angle trunnion with joined head acc. to DIN 648K standards

Ordering code
1393.Ø.27F Mounting consist of rear narrow clevis cod. 1393.Ø.30F with Simple square counter clevis cod. 1393.Ø.28F (ordering separately)

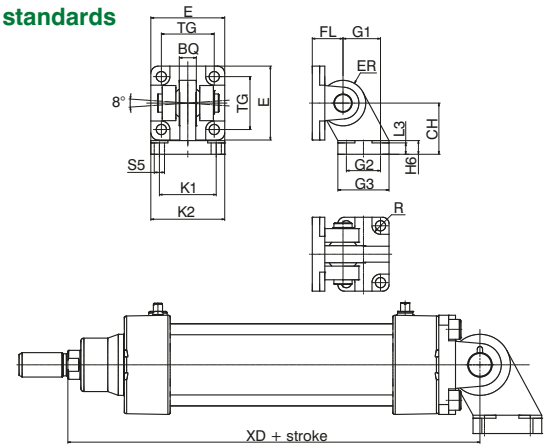

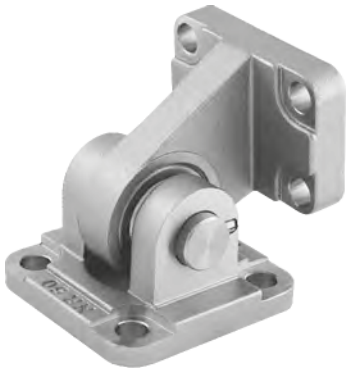

Made of stainless steel AISI 316.

Bore	32	40	50	63	80	100
CH (JS 15)	32	36	45	50	63	71
E	45	55	65	75	95	115
FL	22	25	27	32	36	41
G1 (JS 15)	21	24	33	37	47	55
G2 (JS 14)	18	22	30	35	40	50
G3	31	35	45	50	60	70
H6	10	10	12	12	14	15
K1 (JS 14)	38	41	50	52	66	76
K2	51	54	65	67	86	96
L3 ($^{+0,5}_{-0}$)	8,5	8,5	10,5	10,5	11,5	12,5
S5 (H13)	6,6	6,6	9	9	11	11
TG	32,5	38	46,5	56,5	72	89
XD	142	160	170	190	210	230
BQ	10,5	12	15	15	18	18
ER	15	18	20	23	27	30
R (H 13)	5,5	5,5	7,5	7,5	9	9
Weight g	350	540	880	1200	2350	3380

Rod fork and nuts

Ordering code
1393.Ø.13F
1393.Ø.18F

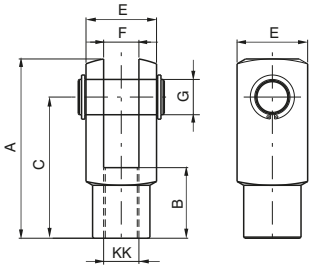

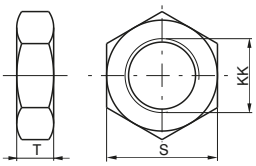

Fork:
Element that when screwed to the rod consents a regular functioning even when there are significant lateral forces as the connection point.
Made of stainless steel AISI 303.
Nut:
Used to block the position of the fork.
Made of stainless steel AISI 316.

Bore		32	40	50	63	80	100
A		52	62	83	83	105	105
B		20	24	32	32	40	40
C		40	48	64	64	80	80
E		20	24	32	32	40	40
F(B13)		10	12	16	16	20	20
G		10	12	16	16	20	20
S		17	19	24	24	30	30
T		6	7	8	8	9	9
KK		M10X1,25	M12X1,25	M16X1,5	M16X1,5	M20X1,5	M20X1,5
Weight	fork	100	140	340	340	680	680
g	Nut	15	20	20	20	40	40

Ball joint

Ordering code
1393.Ø.32F

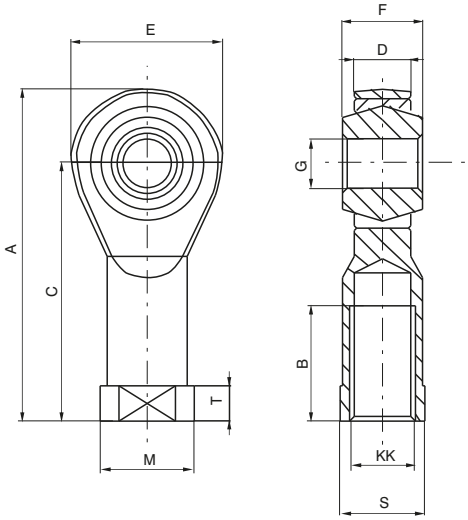

Ball joint:
Mounted on the rod thread, assures a regular operation even in the presence of significant forces to the linked element.
Made of stainless steel AISI 304 and 420.

Bore	32	40	50	63	80	100
A	57	66	85	85	102	102
B	20	22	28	28	33	33
C	43	50	64	64	77	77
D	10,5	12	15	15	18	18
E	28	32	42	42	50	50
F	14	16	21	21	25	25
G (H 7)	10	12	16	16	20	20
KK	M10x1,25	M12x1,25	M16x1,5	M16x1,5	M20x1,5	M20x1,5
M	19	22	27	27	34	34
S	17	19	22	22	30	30
T	6,5	6,5	8	8	10	10
Weight g	75	110	220	220	410	410

Overall dimensions and technical information are provided solely for informative purposes and may be modified without notice

Series 1450 - 1463 - Hydro-pneumatic speed control cylinders (Ø50 - Ø63)

General

Pneumatic cylinder ISO 15552 handling and controlling movement by means of internal hydraulic circuit.
All ISO fixing devices can be used except for:

- Cylinder Ø63 front clevis code 1463.63.08F
- Cylinder Ø63 front flange code 1463.63.03F
- Cylinder Ø63 foot code 1463.63.05/1F

Ordering key

14_.stroke._._ . _

Ø50
Ø63

Regulation
A = Regulation on extraction
B = Regulation on compression
D = Double regulation

STOP function
0 = None
A = Stop N.C. extraction
B = Stop N.C. compression
C = Double Stop N.C.
D = Stop N.O. extraction
E = Stop N.O. compression
F = Double Stop N.O.

SKIP function
0 = None
A = Skip N.C. extraction
B = Skip N.C. compression
C = Double Skip N.C.
D = Skip N.O. extraction
E = Skip N.O. compression
F = Double Skip N.O.

Construction characteristics

End cap	aluminium black anodised
Piston Rod	steel tube externally chrome plated
Barrel	aluminium alloy anodised
Magnetic piston	aluminium
Cushion screw	nickel plated steel
Oil tank	aluminium
Pneumatic piston seal (pneumatic side)	oil resitant NBR rubber
Rod and cushion seal	PUR
Hydraulic piston seal (hydraulic side)	PUR

Technical characteristics

Pneumatic media	filtered and lubricated air
Hydraulic media	filtered 1μ hydraulic oil
Maximum pressure	8 bar
Skip & Stop valve minimum operating pressure	3 bar
Environment temperature	-5°C +70°C
Minimum regulated speed	40 mm/min.
Maximum regulated speed	6000 mm/min. *
Speed with SKIP	150 mm/sec. *
Free speed (without regulation)	300 mm/sec. *
Cushion speed	20 mm *
Standard stroke	from 50 to 450 steps 50 mm
Possibility of rear regulation (on request)	

*** Attention:** speed recorded with cylinder on horizontal position fed at 8 bar without load on piston rod.

Force (N)

BORE	FORCE	PRESSURE (bar)									
		1	2	3	4	5	6	7	8	9	10
50	Extraction	181.4	362.9	544.3	725.7	907.2	1088.6	1270	1451.5	1632.9	1814.3
	Compression	144.4	288.8	433.2	577.6	722	866.3	1010.7	1155.1	1299.5	1443.9
63	Extraction	294.6	589.1	883.7	1178.2	1472.8	1767.3	2061.9	2356.5	2651	2945.6
	Compression	211.3	422.6	633.9	845.2	1056.6	1267.9	1479.2	1690.5	1901.8	2113.1

Overall dimensions and technical information are provided solely for informative purposes and may be modified without notice

Base cylinder dimensions

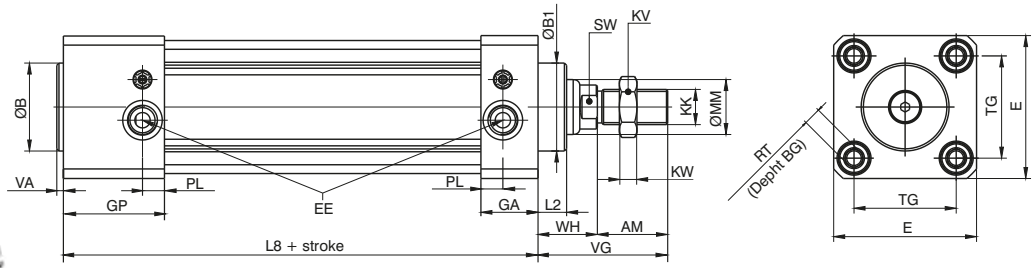

Bore	AM	B (d11)	B1 (d11)	BG	E	EE	GA	GP	KK	KV	KW	L2	L8	MM	PL	RT	SW	TG	VA	VG	WH
50	32	40	40	16	65	G1/4"	26	46	M16x1,5	24	8	13	116	25	10	M8	17	46,5	3	59	27
63		45	50		75	G3/8"			M16x1,5			20	121	35	12			56,5	4	69	37

Function valves and regulators position for the different versions

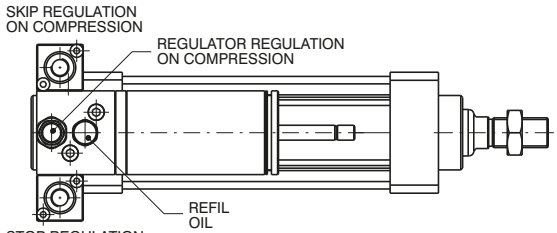

Compression

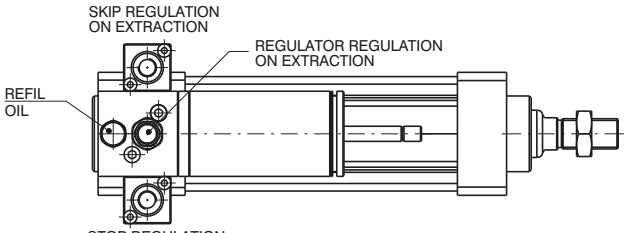

Extraction

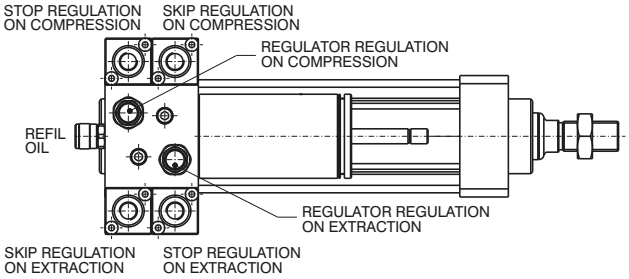

Double regulation

Rear regulator dimensions

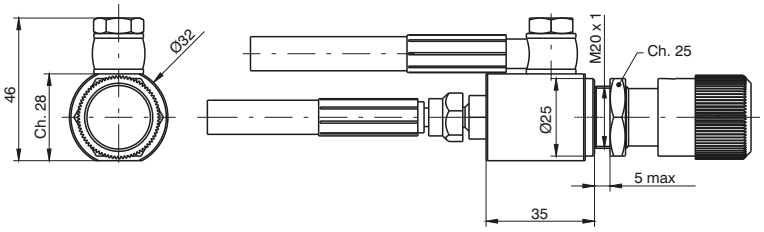

SKIP and STOP valves inlet feed position

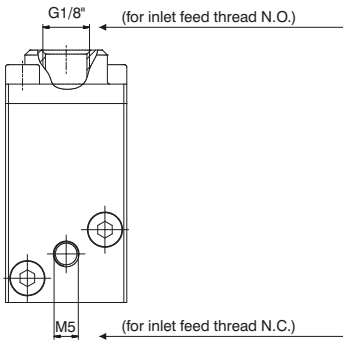

Sensor brackets codes 1500._, RS._, HS._

Dimensions

Bore	L
Ø50	77
Ø63	87

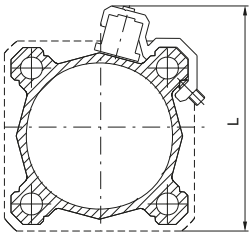

Ordering code	
1320.B	Brackets for cylinder sensors Ø50 - Ø63

Sensor brackets codes 1580._, MRS._, MHS._

Dimensions

Bore	L
Ø50	66
Ø63	76

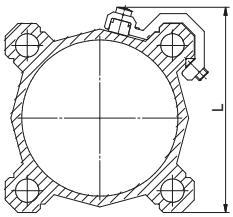

Ordering code	
1320.BS	Brackets for cylinder sensors Ø50 - Ø63

Sensor for cylinder
For technical characteristics and code see “Magnetic sensor” section

Overall dimensions and technical information are provided solely for informative purposes and may be modified without notice

Regulation on the outward stroke

Ordering code
14Ø.stroke.A.0.0

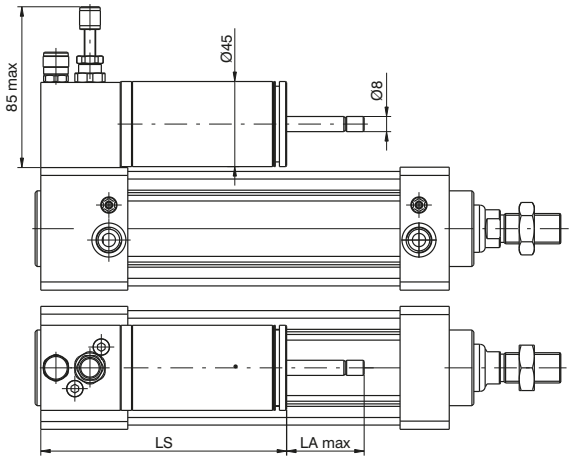

Ø50 Weight g 1970 + g 200 every 50 mm. stroke
Ø63 Weight g 2591 + g 280 every 50 mm. stroke

Strokes	LS	LA max
0 ... 150	130	41
151 ... 350	185	66
351 ... 450	255	106

Regulation on the inward stroke

Ordering code
14Ø.stroke.B.0.0

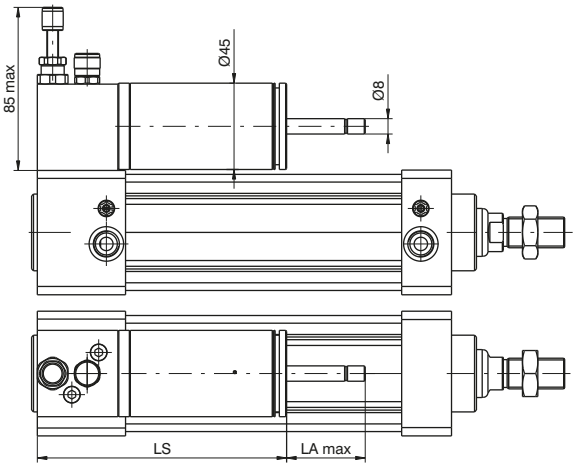

Ø50 Weight g 1970 + g 200 every 50 mm. stroke
Ø63 Weight g 2591 + g 280 every 50 mm. stroke

Strokes	LS	LA max
0 ... 150	130	41
151 ... 350	185	66
351 ... 450	255	106

Regulation in both directions

Ordering code
14Ø.stroke.D.0.0

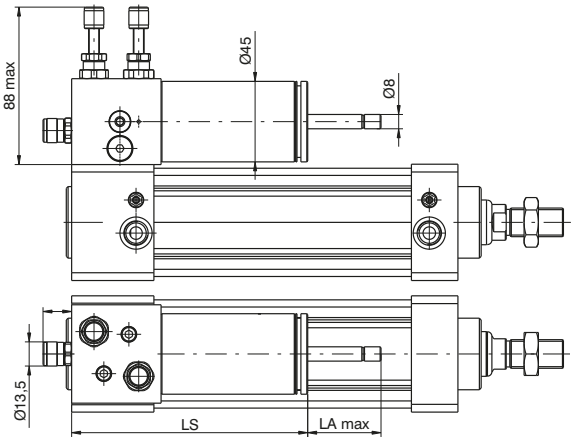

Ø50 Weight g 2128 + g 200 every 50 mm. stroke
Ø63 Weight g 2749 + g 280 every 50 mm. stroke

Strokes	LS	LA max
0 ... 150	132	41
151 ... 350	187	66
351 ... 450	257	106

Regulation on the outward stroke with Skip N.O.

Ordering code
14Ø.stroke.A.0.D

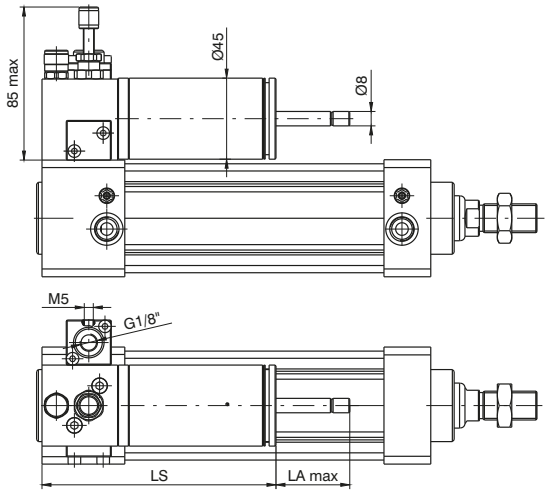

Ø50 Weight g 2059 + g 200 every 50 mm. stroke
Ø63 Weight g 2928 + g 280 every 50 mm. stroke

Strokes	LS	LA max
0 ... 150	130	41
151 ... 350	185	66
351 ... 450	255	106

Regulation on the inward stroke with Skip N.O.

Ordering code
14Ø.stroke.B.0.E

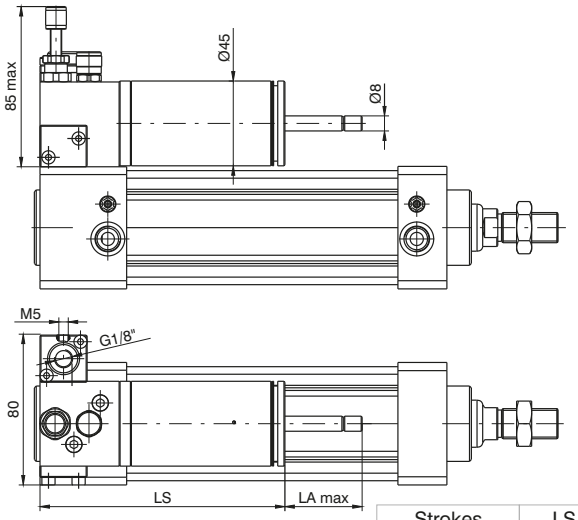

Ø50 Weight g 2059 + g 200 every 50 mm. stroke
Ø63 Weight g 2928 + g 280 every 50 mm. stroke

Strokes	LS	LA max
0 ... 150	130	41
151 ... 350	185	66
351 ... 450	255	106

Regulation on the outward stroke with Stop N.O.

Ordering code
14Ø.stroke.A.D.0

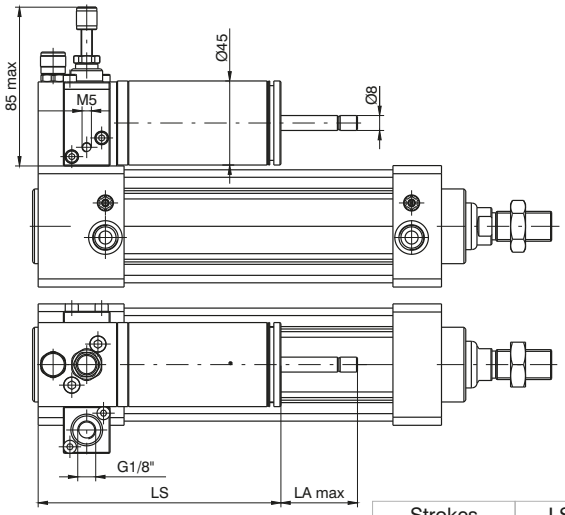

Ø50 Weight g 2059 + g 200 every 50 mm. stroke
Ø63 Weight g 2928 + g 280 every 50 mm. stroke

Strokes	LS	LA max
0 ... 150	130	41
151 ... 350	185	66
351 ... 450	255	106

Overall dimensions and technical information are provided solely for informative purposes and may be modified without notice

Regulation on the inward stroke with Stop N.O.

Ordering code
14Ø.stroke.B.E.0

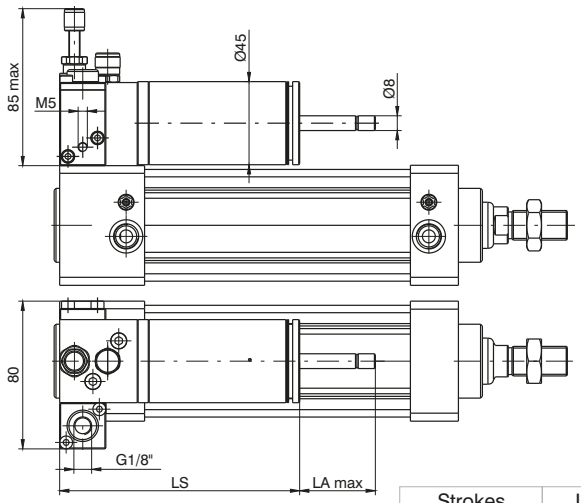

Strokes	LS	LA max
0 ... 150	130	41
151 ... 350	185	66
351 ... 450	255	106

Ø50 Weight g 2059 + g 200 every 50 mm. stroke
Ø63 Weight g 2928 + g 280 every 50 mm. stroke

Regulation on the outward stroke with Skip N.O. - Stop N.O.

Ordering code
14Ø.stroke.A.D.D

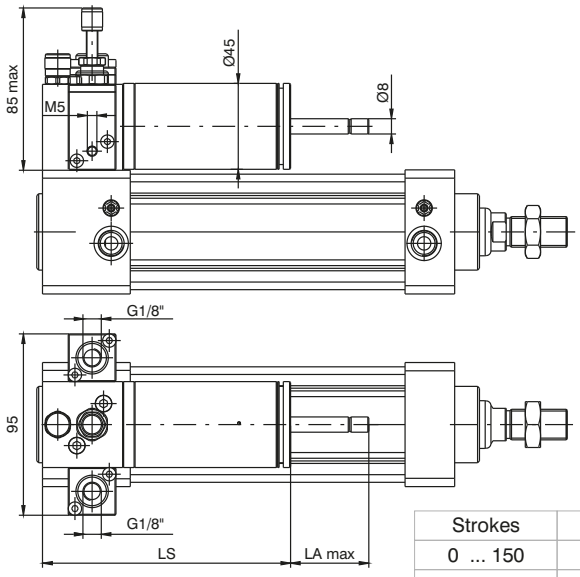

Strokes	LS	LA max
0 ... 150	130	41
151 ... 350	185	66
351 ... 450	255	106

Ø50 Weight g 2140 + g 200 every 50 mm. stroke
Ø63 Weight g 2761 + g 280 every 50 mm. stroke

Regulation on the inward stroke with Skip N.O. - Stop N.O.

Ordering code
14Ø.stroke.B.E.E

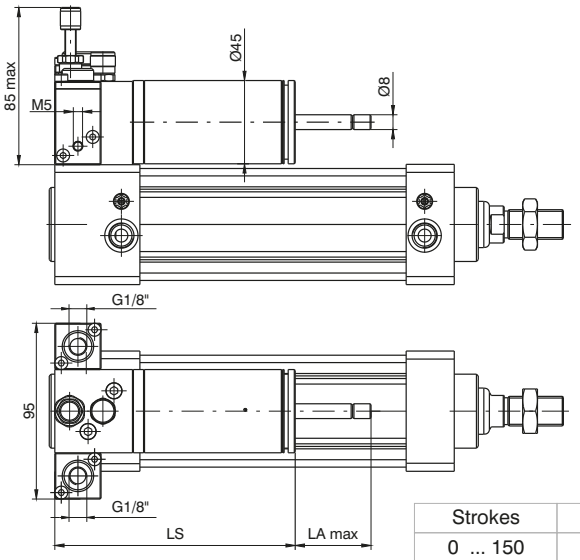

Strokes	LS	LA max
0 ... 150	130	41
151 ... 350	185	66
351 ... 450	255	106

Ø50 Weight g 2140 + g 200 every 50 mm. stroke
Ø63 Weight g 2761 + g 280 every 50 mm. stroke

Overall dimensions and technical information are provided solely for informative purposes and may be modified without notice

Regulation and Skip in both directions (N.O. Skip valves in both directions)

Ordering code
14Ø.stroke.D.0.F

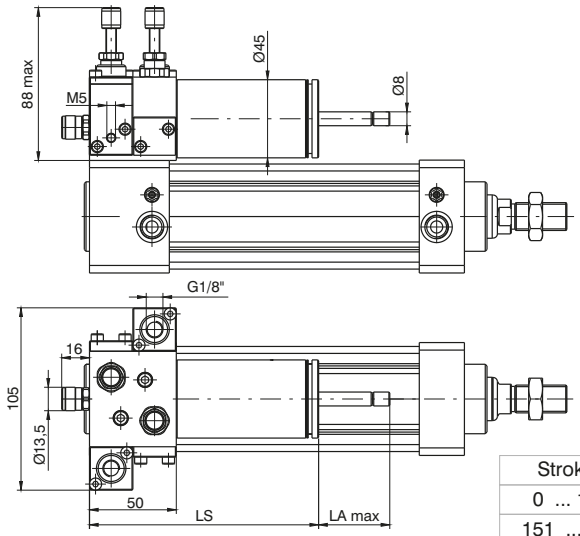

Strokes	LS	LA max
0 ... 150	132	41
151 ... 350	187	66
351 ... 450	257	106

Ø50 Weight g 2311 + g 200 every 50 mm. stroke
Ø63 Weight g 2932 + g 280 every 50 mm. stroke

Regulation and Stop in both directions (N.O. Stop valves in both directions)

Ordering code
14Ø.stroke.D.F.0

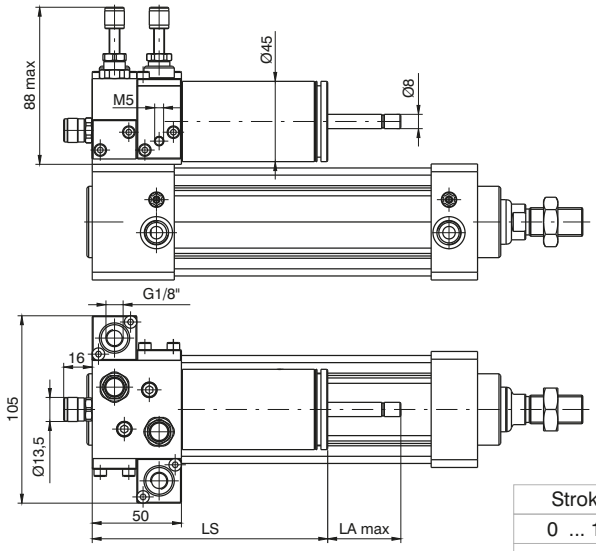

Strokes	LS	LA max
0 ... 150	132	41
151 ... 350	187	66
351 ... 450	257	106

Ø50 Weight g 2311 + g 200 every 50 mm. stroke
Ø63 Weight g 2932 + g 280 every 50 mm. stroke

Regulation with Skip and Stop in both directions (N.O. Skip and Stop valves in both directions)

Ordering code
14Ø.stroke.D.F.F

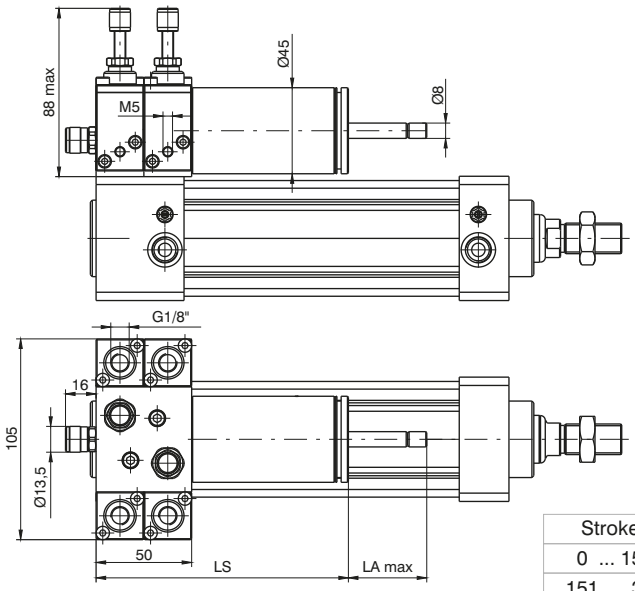

Strokes	LS	LA max
0 ... 150	132	41
151 ... 350	187	66
351 ... 450	257	106

Ø50 Weight g 2473 + g 200 every 50 mm. stroke
Ø63 Weight g 3094 + g 280 every 50 mm. stroke

Overall dimensions and technical information are provided solely for informative purposes and may be modified without notice

Series 1500 - Compact cylinders according to standard ISO 21287 “ECOMPACT”

General

These cylinders are built according to ISO 21287 standards. New barrel profile has two sensor slots on the three sides (Ø20 and Ø25 one slot) suitable for sensors 1580._, MRS._, MHS._ series housing, without need for adaptors.
Versions with end stroke adjustable pneumatic cushioning are also available, allowing adjustments to deceleration and keeping the required overall dimensions according to ISO 21287.
For fixing operation is possible to use the four threaded holes on the end covers, or screws in body holes, alternatively all the fixing devices of UNITOP RU-P/6-P/7 (Ø20 and Ø25) and ISO 15552 (from Ø32 to Ø100) series.

Construction characteristics

Body	anodised aluminium
End cap	aluminium alloy casting painted
Bearing piston rod	sintered bronze
Piston rod	from Ø20 to Ø25 stainless steel from Ø32 to Ø100 C43 chromed (on request stainless steel)
Piston	from Ø20 to Ø40 acetal resin (aluminium on request), Ø50 and Ø100 aluminium (with FPM seals, aluminium piston for all standard diameters)
Seals	Standard: NBR oil resistant rubber, PUR piston rod seals (PUR or FPM seals available upon request)
Spring	stainless steel
Fixing screws	plated zinc steel

Operational characteristics

Fluid	Filtered air. No lubrication needed, if applied it shall be continuous.
Max. pressure	10 bar
Operating temperature	-5°C - +70°C with standard seals (magnetic or non magnetic piston) -30°C - +80°C with PUR seals (magnetic or non magnetic piston) -5°C - +80°C with FPM seals (magnetic piston) -5°C - +150°C with FPM seals (non magnetic piston)

Please follow the suggestions below to ensure a long life for these cylinders:
- use clean and lubricated air
- correct alignment during assembly with regard to the applied load so as to avoid radial components or bending the rod.
- avoid high speeds together with long strokes and heavy loads: this would produce kinetic energy which the cylinder cannot absorb, especially if used as a limit stop (in this case use mechanical stop device and aluminium piston)
- evaluate the environmental characteristics of cylinder used (high temperature, hard atmosphere, dust, humidity etc.)

Please note: air must be dried for applications with lower temperature.
Use hydraulic oils H class (ISO VG32) for correct continued lubrication.
Our Technical Department will be glad to help.

Stroke tolerance, minimum and maximum spring loads and cushioning length

Bore	Stroke tolerance	Minimum and maximum springs load		Cushioning length
(mm)	(mm)	(N)		(mm)
		min.	max.	
Ø20	+1.5 / 0 mm	10.8	19.6	/
Ø25		16.7	22.6	5
Ø32	+2 / 0 mm	19.6	25.5	6.5
Ø40		25.5	42.2	8
Ø50		44.1	96.3	7.5
Ø63	+2.5 / 0mm	44.1	96.3	7.5
Ø80		63.8	100.1	8
Ø100		107.9	193.3	12

Standard stroke

DOUBLE ACTING BASIC version and THROUGH ROD CYLINDER version

Bore	Stroke																										
	5	10	15	20	25	30	35	40	45	50	55	60	65	70	75	80	100	125	150	160	200	250	300	320	350	400	450	500
	WITHOUT CUSHIONING DEVICE																											
Ø20	●	●	●	●	●	●	●	●	●	●	●	●	●	●	●	●	●	●	●	●	●							
Ø25	●	●	●	●	●	●	●	●	●	●	●	●	●	●	●	●	●	●	●	●	●							
Ø32	●	●	●	●	●	●	●	●	●	●	●	●	●	●	●	●	●	●	●	●	●	●	●					
Ø40	●	●	●	●	●	●	●	●	●	●	●	●	●	●	●	●	●	●	●	●	●	●	●					
Ø50	●	●	●	●	●	●	●	●	●	●	●	●	●	●	●	●	●	●	●	●	●	●	●	●	●	●		
Ø63	●	●	●	●	●	●	●	●	●	●	●	●	●	●	●	●	●	●	●	●	●	●	●	●	●	●		
Ø80	●	●	●	●	●	●	●	●	●	●	●	●	●	●	●	●	●	●	●	●	●	●	●	●	●	●	●	●
Ø100	●	●	●	●	●	●	●	●	●	●	●	●	●	●	●	●	●	●	●	●	●	●	●	●	●	●	●	●
	WITH CUSHIONING DEVICE																											
Ø20																												
Ø25					●	●	●	●	●	●	●	●	●	●	●	●	●	●	●	●	●							
Ø32					●	●	●	●	●	●	●	●	●	●	●	●	●	●	●	●	●	●	●					
Ø40					●	●	●	●	●	●	●	●	●	●	●	●	●	●	●	●	●	●	●					
Ø50					●	●	●	●	●	●	●	●	●	●	●	●	●	●	●	●	●	●	●	●	●	●		
Ø63					●	●	●	●	●	●	●	●	●	●	●	●	●	●	●	●	●	●	●	●	●	●		
Ø80					●	●	●	●	●	●	●	●	●	●	●	●	●	●	●	●	●	●	●	●	●	●	●	●
Ø100					●	●	●	●	●	●	●	●	●	●	●	●	●	●	●	●	●	●	●	●	●	●	●	●

DOUBLE ACTING THROUGH ROD CYLINDER BORED version

Bore	Stroke																										
	5	10	15	20	25	30	35	40	45	50	55	60	65	70	75	80	25	30	35	40	45	50	55	60	65	70	75	80
	WITHOUT CUSHIONING DEVICE																WITH CUSHIONING DEVICE											
Ø20	●	●	●	●	●	●	●	●	●	●																		
Ø25	●	●	●	●	●	●	●	●	●	●							●	●	●	●	●	●						
Ø32	●	●	●	●	●	●	●	●	●	●							●	●	●	●	●	●						
Ø40	●	●	●	●	●	●	●	●	●	●							●	●	●	●	●	●						
Ø50	●	●	●	●	●	●	●	●	●	●	●	●	●	●	●		●	●	●	●	●	●	●	●	●	●	●	
Ø63	●	●	●	●	●	●	●	●	●	●	●	●	●	●	●		●	●	●	●	●	●	●	●	●	●	●	
Ø80	●	●	●	●	●	●	●	●	●	●	●	●	●	●	●	●	●	●	●	●	●	●	●	●	●	●	●	●
Ø100	●	●	●	●	●	●	●	●	●	●	●	●	●	●	●	●	●	●	●	●	●	●	●	●	●	●	●	●

DOUBLE ACTING version WITH NON-ROTATING DEVICE

Bore	Stroke																										
	5	10	15	20	25	30	35	40	45	50	55	60	65	70	75	80	25	30	35	40	45	50	55	60	65	70	75	80
	WITHOUT CUSHIONING DEVICE																WITH CUSHIONING DEVICE											
Ø20	●	●	●	●	●	●	●	●																				
Ø25	●	●	●	●	●	●	●	●									●	●	●	●								
Ø32	●	●	●	●	●	●	●	●	●	●	●	●	●	●	●	●	●	●	●	●	●	●	●	●	●	●	●	●
Ø40	●	●	●	●	●	●	●	●	●	●	●	●	●	●	●	●	●	●	●	●	●	●	●	●	●	●	●	●
Ø50	●	●	●	●	●	●	●	●	●	●	●	●	●	●	●	●	●	●	●	●	●	●	●	●	●	●	●	●
Ø63	●	●	●	●	●	●	●	●	●	●	●	●	●	●	●	●	●	●	●	●	●	●	●	●	●	●	●	●
Ø80	●	●	●	●	●	●	●	●	●	●	●	●	●	●	●	●	●	●	●	●	●	●	●	●	●	●	●	●
Ø100	●	●	●	●	●	●	●	●	●	●	●	●	●	●	●	●	●	●	●	●	●	●	●	●	●	●	●	●

SINGLE ACTING version

Bore	Stroke				
	5	10	15	20	25
Ø20	●	●	●	●	●
Ø25	●	●	●	●	●
Ø32	●	●	●	●	●
Ø40	●	●	●	●	●
Ø50	●	●	●	●	●
Ø63	●	●	●	●	●
Ø80	●	●	●	●	●
Ø100	●	●	●	●	●

Overall dimensions and technical information are provided solely for informative purposes and may be modified without notice

BASIC version
double and single acting

Ø20 and Ø25

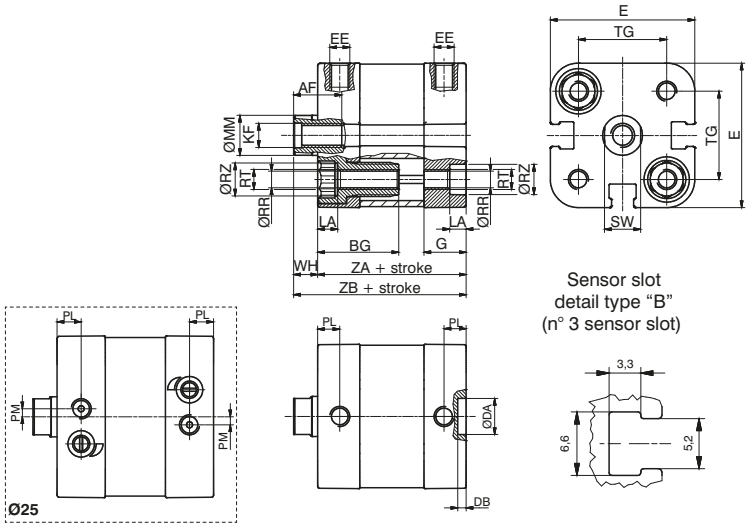

from Ø32 to Ø63

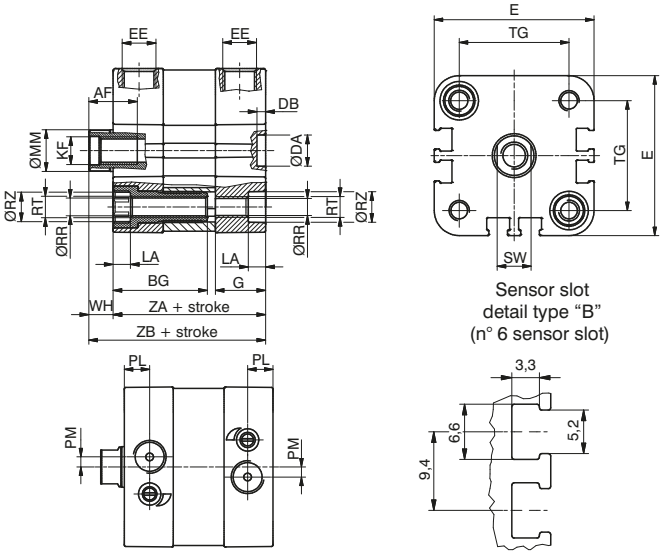

Ø80 and Ø100

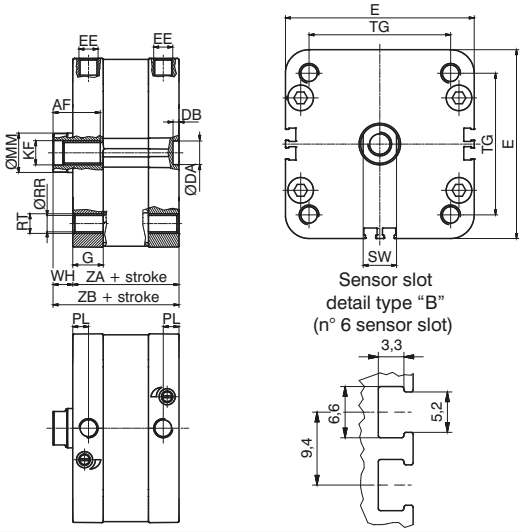

THROUGH ROD CYLINDER version
double and single acting

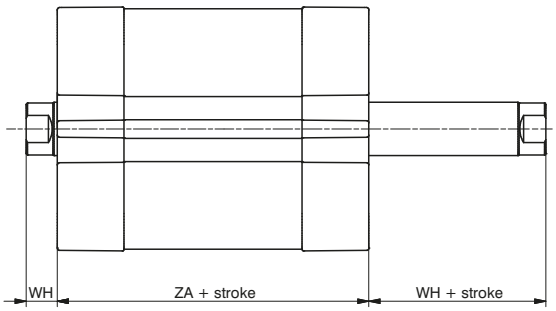

TANDEM version

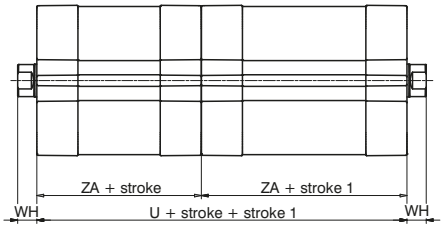

Tandem with opposed rods

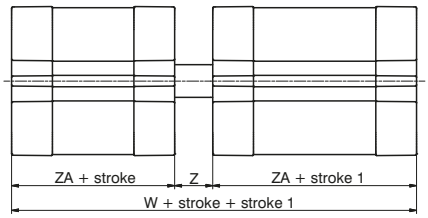

Opposed tandem with common rods

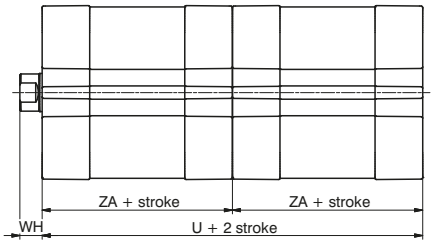

Tandem push with common rod

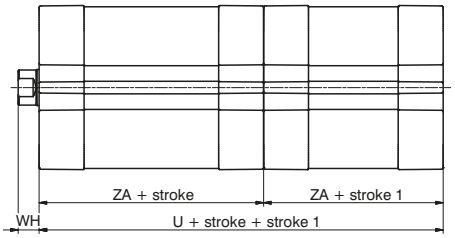

Tandem push with independent rod

Ordering code

Basic and Through rod version

15 _ _.Ø.stroke. _ _ . _

- **1** = magnetic piston, Double acting
- **2** = magnetic piston, Single acting with front spring
- **3** = magnetic piston, Single acting with rear spring
- **4** = non magnetic piston, Double acting
- **5** = non magnetic piston, Single acting with front spring
- **6** = non magnetic piston, Single acting with rear spring

- **01** = Basic, female threaded rod
- **02** = Basic, male threaded rod
- **03** = through rod, female threaded rod
- **04** = through rod, male threaded rod
- ** **05** = through rod, bored female threaded rod
- **06** = through rod, bored male threaded rod
- **07** = with non-rotating device
- **08** = through rod, female threaded rod, with non-rot. device on one side ***
- **09** = through rod, male threaded rod, with non-rot. device on one side ***

- **0** = NBR seals and C43 chromed plated rod *
- **1** = NBR seals and stainless steel rod (starting from bore Ø32)
- **4** = PUR seals and C43 chromed plated rod *
- **5** = PUR seals and stainless steel rod (starting from bore Ø32)
- **6** = FPM seals and C43 chromed plated rod *
- **7** = FPM seals and stainless steel rod (starting from bore Ø32)

* (Ø20 and Ø25 stainless steel)

- **4** = Non-cushioned versions (mechanical cushioning only)
- **5** = Versions with adjustable end of stroke cushioning system (from Ø25)

** It is possible to order the Ø20, Ø25, Ø32 and Ø40 cylinders with an aluminium piston by replacing the '0' with 'K' in the ordering code.
Example: 1540.20.10.01.1 (Acetyl Resin Piston)
1540.20.10.K1.1 (Aluminium Piston version)

*** for single acting version, the spring is on the anti-rotation side

TANDEM version (magnetic pistons)

15 _ _ . Ø .stroke. (stroke 1) . _

Tandem push with common rods
- **C** = female threaded rod
- **G** = male threaded rod
- **H** = with through rod and female threaded rod
- **R** = with through rod and male threaded rod
- **N** = with non-rotating device

Tandem push with independent rods
- **B** = female threaded rod
- **F** = male threaded rod
- **M** = with non-rotating device
- **P** = with through rod and female threaded rod
- **Q** = with through rod and male threaded rod

- **D** = **Opposed tandem with common rod**

Tandem with opposite rods
- **A** = female threaded rod
- **E** = male threaded rod
- **L** = with non-rotating device on both ends

- **0** = NBR seals and C43 chromed plated rod *
- **1** = NBR seals and stainless steel rod (starting from bore Ø32)
- **4** = PUR seals and C43 chromed plated rod *
- **5** = PUR seals and stainless steel rod (starting from bore Ø32)
- **6** = FPM seals and C43 chromed plated rod *
- **7** = FPM seals and stainless steel rod (starting from bore Ø32)

* (Ø20 and Ø25 stainless steel)

- **4** = Non-cushioned version (mechanical cushioning only)
- **5** = Versions with adjustable end of stroke cushioning system (from Ø25)

Seals compounds scheme: **NBR** oil resistant nitrilic rubber
PUR: polyurethane seals **FPM**: fluoropolymer rubber seals

Table of dimensions

Bore	Ø20	Ø25	Ø32	Ø40	Ø50	Ø63	Ø80	Ø100
AF (min)	12	12	14	14	18	18	24	24
BG	20	20	16	16	16	16	/	/
DA (H9) Ø	9	9	9	9	12	12	12	12
DB (+0.1/0)	2.1	2.1	2.5	2.5	2.6	2.6	3	3
E (max)	36	40.5	47.5	55	66	78	96	116
EE	M5	M5	G1/8	G1/8	G1/8	G1/8	G1/8	G1/8
G	10.5	12	14.5	15	15	15	15.5	18.5
KF	M6	M6	M8	M8	M10	M10	M12	M12
LA (0/-0.1)	4.1	4.1	5	5	5	5	/	/
MM (f 7) Ø	10	10	12	12	16	16	20	25
PL (+0.1/0)	5.5	6	7.5	8	8	8	8	8
PM	/	2	3	/	/	/	/	/
RR (min) Ø	4.1	4.1	5.1	5.1	6.6	6.6	8.4	8.4
RT	M5	M5	M6	M6	M8	M8	M10	M10
RZ (min) Ø	7.5	7.5	8.5	8.5	10.5	10.5	/	/
SW (0/-0.1)	9	9	10	10	13	13	17	22
TG (±0.2)	22	26	32.5	38	46.5	56.5	72	89
U	74	78	88	90	90	98	108	134
W	83	89	100	103	105	113	124	154
WH (±1)	6	6	7	7	8	8	10	10
Z	9	11	12	13	15	15	16	20
ZA (±0.5)	37	39	44	45	45	49	54	67
ZB (+1/0)	43	45	51	52	53	57	64	77
Weight stroke	105	110	200	270	420	550	760	1400
gr. every 5mm	10	10.5	13	17	23.5	27	37	51

Overall dimensions and technical information are provided solely for informative purposes and may be modified without notice

Basic version male piston rod

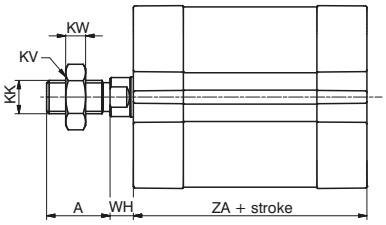

Through rod version male rod

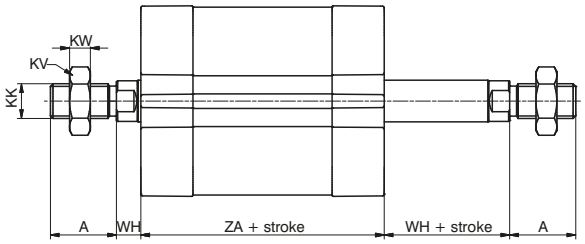

Through rod version bored female piston rod

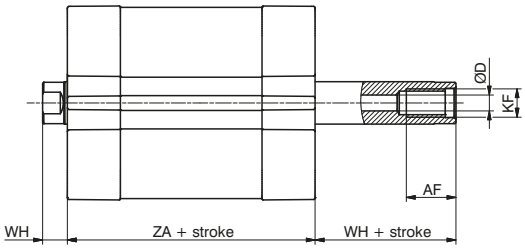

Through rod version bored male piston rod

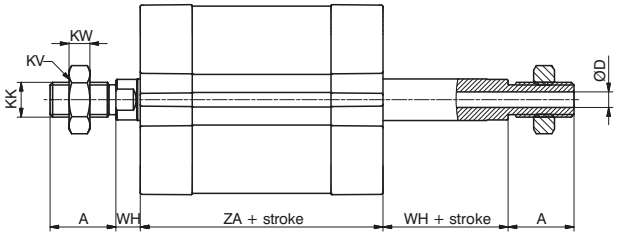

Non-rotating version

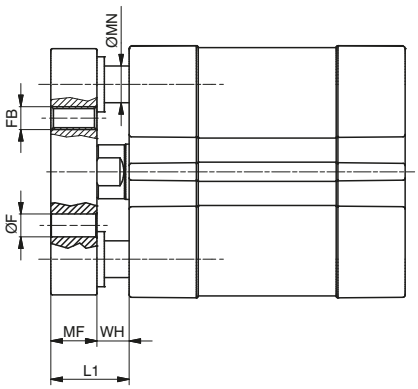

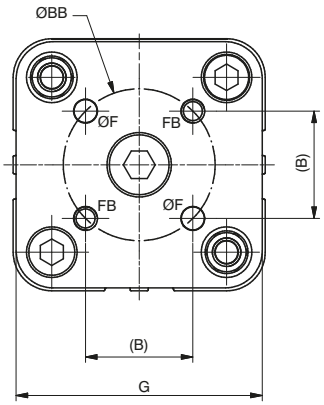

Bore	Ø20	Ø25	Ø32	Ø40	Ø50	Ø63	Ø80	Ø100
A (0/-0,5)	16	16	19	19	22	22	28	28
AF (min)	12	12	14	14	18	18	24	24
B	12	15,6	19,8	23,3	29,7	35,4	46	56,6
BB (±0,1) Ø	17	22	28	33	42	50	65	80
D Ø	3	3,8	4,5	4,5	6	6	8	10
F (+0,1/0) Ø	4	5	5	5	6	6	8	10
FB	M4	M5	M5	M5	M6	M6	M8	M10
G	35	39,5	45	52	65	75	95	115
KF	M6	M6	M8	M8	M10	M10	M12	M12
KK	M8x1,25	M8x1,25	M10x1,25	M10x1,25	M12x1,25	M12x1,25	M16x1,5	M16x1,5
KV	13	13	17	17	19	19	24	24
KW	5	5	6	6	7	7	8	8
L1	14	14	17	17	20	20	24	24
MF (+0,1/0)	8	8	10	10	12	12	14	14
MN (f 7) Ø	6	6	8	8	10	10	12	12
WH (±1)	6	6	7	7	8	8	10	10
ZA (±0,5)	37	39	44	45	45	49	54	67

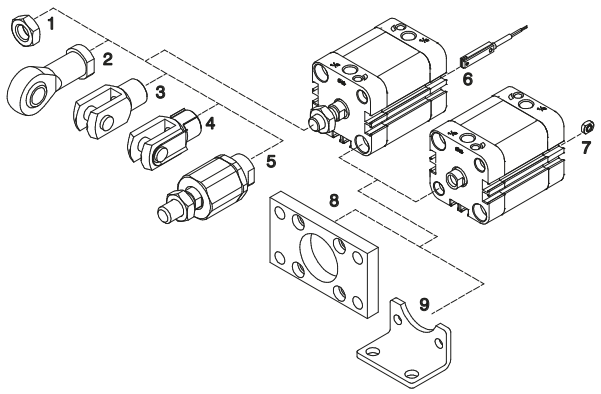

Sensor and piston rod accessories

Pos.	Description	Ordering code	
1	Rod lock nut	**1200.20.06** **1320.32.18F** **1320.40.18F** **1320.50.18F**	(Ø20-Ø25) (Ø32-Ø40) (Ø50-Ø63) (Ø80-Ø100)
2	Ball joint	**1200.20.32F** **1320.32.32F** **1320.40.32F** **1320.50.32F**	(Ø20-Ø25) (Ø32-Ø40) (Ø50-Ø63) (Ø80-Ø100)
3	Fork	**1200.20.04** **1320.32.13F** **1320.40.13F** **1320.50.13F**	(Ø20-Ø25) (Ø32-Ø40) (Ø50-Ø63) (Ø80-Ø100)
4	Fork with clips	**1200.20.04/1** **1320.32.13/1F** **1320.40.13/1F** **1320.50.13/1F**	(Ø20-Ø25) (Ø32-Ø40) (Ø50-Ø63) (Ø80-Ø100)
5	Self-aligning joint	**1200.20.33F** **1320.32.33F** **1320.40.33F** **1320.50.33F**	(Ø20-Ø25) (Ø32-Ø40) (Ø50-Ø63) (Ø80-Ø100)
6	Sensors	(See chapter 6 magnetic sensors)	
7	Valves direct mounting bolt	**1500.20F**	(Ø20 - Ø100)

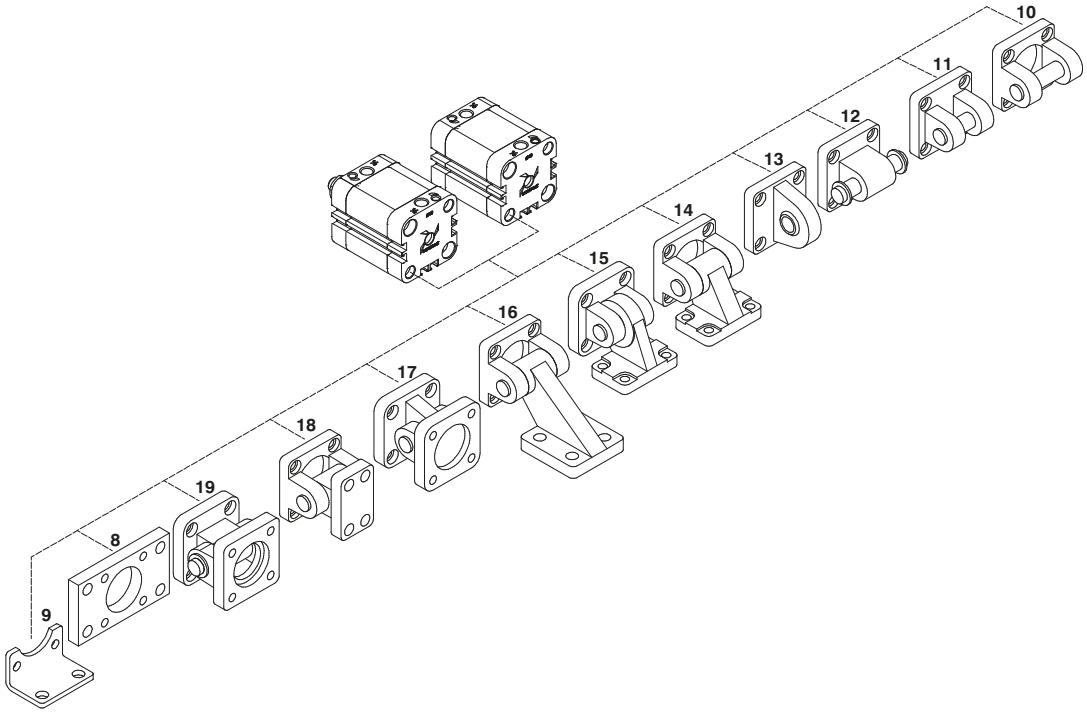

Fixing

Pos.	Description	Ordering code			
		Aluminium		Steel	
8	Flange (MF2)	/		**1540.Ø.03F** **1380.Ø.03F**	(Ø20 - Ø25) (Ø32 - Ø100)
9	Foot (MS1)	/		**1540.Ø.05/1F**	(Ø20 - Ø100)
10	Rear female clevis (MP2)	**1380.Ø.09F**	(Ø32 - Ø100)	**1320.Ø.20F**	(Ø32 - Ø100)
11	Narrow rear female trunnion (AB6)	**1380.Ø.30F**	(Ø32 - Ø100)	**1320.Ø.29F**	(Ø32 - Ø100)
12	Rear male clevis (MP4)	**1580.Ø.09/1F** **1380.Ø.09/1F**	(Ø20 - Ø25) (Ø32 - Ø100)	**1580.Ø.09/2F** **1320.Ø.21F**	(Ø20 - Ø25) (Ø32 - Ø100)
13	Rear male clevis (with jointed head - MP6)	**1380.Ø.15F**	(Ø32 - Ø100)	**1320.Ø.25F**	(Ø32 - Ø100)
14	Square angle trunnion (AB7)	**1380.Ø.35F**	(Ø32 - Ø100)	**1320.Ø.23F**	(Ø32 - Ø100)
15	Square angle trunnion (with joined head)			**1320.Ø.27F**	(Ø32 - Ø100)
16	Square angle trunnion (not specified by ISO 15552)	**1380.Ø.11F**	(Ø32 - Ø100)	/	
17	Standard trunnion (with joined head)	**1380.Ø.36F**	(Ø32 - Ø100)	**1320.Ø.26F**	(Ø32 - Ø100)
18	Standard trunnion (not specified by ISO 15552)	**1380.Ø.10F**	(Ø32 - Ø100)	/	
19	Complete standard trunnion	/		**1320.Ø.22F**	(Ø32 - Ø100)

Overall dimensions and technical information are provided solely for informative purposes and may be modified without notice

Rod lock nut

Ordering code	
Ø20-Ø25:	**1200.20.32F**
Ø32-Ø40:	**1320.32.32F**
Ø50-Ø63:	**1320.40.32F**
Ø80-Ø100:	**1320.50.32F**

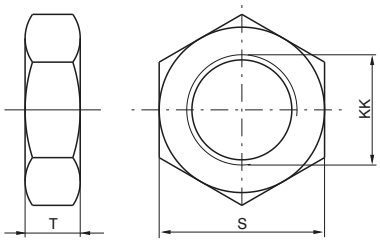

Bore	Ø20	Ø25	Ø32	Ø40	Ø50	Ø63	Ø80	Ø100
S	13	13	17	17	19	19	24	24
T	5	5	6	6	7	7	8	8
KK	M8x1.25	M8x1.25	M10x1.25	M10x1.25	M12x1.25	M12x1.25	M16x1.5	M16x1.5
Weight g	12	12	15	15	20	20	20	20

Ball joint

Ordering code	
Ø20-Ø25:	**1200.20.32F**
Ø32-Ø40:	**1320.32.32F**
Ø50-Ø63:	**1320.40.32F**
Ø80-Ø100:	**1320.50.32F**

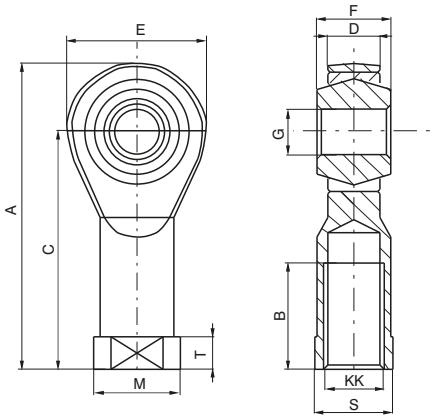

Bore	Ø20	Ø25	Ø32	Ø40	Ø50	Ø63	Ø80	Ø100
A	48	48	57	57	66	66	85	85
B	16	16	20	20	22	22	28	28
C	36	36	43	43	50	50	64	64
D (-0,1)	9	9	10,5	10,5	12	12	15	15
E	24	24	28	28	32	32	42	42
F	12	12	14	14	16	16	21	21
G (H7)	8	8	10	10	12	12	16	16
KK	M8x1,25	M8x1,25	M10x1,25	M10x1,25	M12x1,25	M12x1,25	M16x1,5	M16x1,5
M	16	16	19	19	22	22	27	27
S	14	14	17	17	19	19	22	22
T	5	5	6,5	6,5	6,5	6,5	8	8
Weight g	46	46	76	76	110	110	220	220

Fork

Ordering code	
Ø20-Ø25:	**1200.20.04**
Ø32-Ø40:	**1320.32.13F**
Ø50-Ø63:	**1320.40.13F**
Ø80-Ø100:	**1320.50.13F**

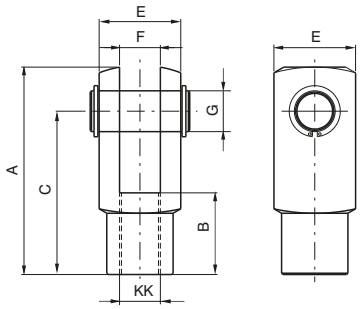

Bore	Ø20	Ø25	Ø32	Ø40	Ø50	Ø63	Ø80	Ø100
A	42	42	52	52	62	62	83	83
B	16	16	20	20	24	24	32	32
C	32	32	40	40	48	48	64	64
E	16	16	20	20	24	24	32	32
F (B12)	8	8	10	10	12	12	16	16
G	8	8	10	10	12	12	16	16
KK	M8x1,25	M8x1,25	M10x1,25	M10x1,25	M12x1,25	M12x1,25	M16x1,5	M16x1,5
Weight g	45	45	100	100	140	140	340	340

Fork with clips

Ordering code	
Ø20-Ø25:	**1200.20.04/1**
Ø32-Ø40:	**1320.32.13/1F**
Ø50-Ø63:	**1320.40.13/1F**
Ø80-Ø100:	**1320.50.13/1F**

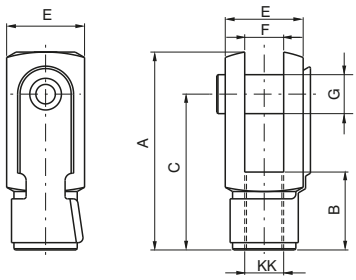

Bore	Ø20	Ø25	Ø32	Ø40	Ø50	Ø63	Ø80	Ø100
A	42	42	52	52	62	62	83	83
B	16	16	20	20	24	24	32	32
C	32	32	40	40	48	48	64	64
E	16	16	20	20	24	24	32	32
F (B12)	8	8	10	10	12	12	16	16
G	8	8	10	10	12	12	16	16
KK	M8x1,25	M8x1,25	M10x1,25	M10x1,25	M12x1,25	M12x1,25	M16x1,5	M16x1,5
Weight g	45	45	100	100	140	140	340	340

Self-aligning joint

Ordering code	
Ø20-Ø25:	**1200.20.33F**
Ø32-Ø40:	**1320.32.33F**
Ø50-Ø63:	**1320.40.33F**
Ø80-Ø100:	**1320.50.33F**

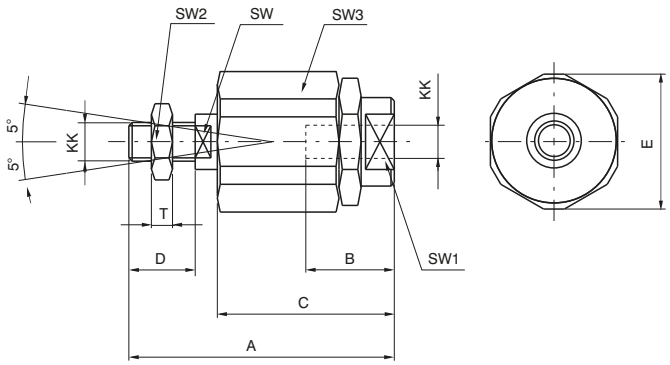

Bore	Ø20	Ø25	Ø32	Ø40	Ø50	Ø63	Ø80	Ø100
A	57	57	71	71	75	75	103	103
B	20	20	20	20	20	20	32	32
C	33	33	46	46	46	46	63	63
D	20	20	20	20	24	24	32	32
E	19	19	32	32	32	32	45	45
KK	M8x1,25	M8x1,25	M10x1,25	M10x1,25	M12x1,25	M12x1,25	M16x1,5	M16x1,5
SW	7	7	12	12	12	12	20	20
SW1	11	11	19	19	19	19	27	27
SW2	13	13	17	17	19	19	24	24
SW3	17	17	30	30	30	30	41	41
T	5	5	6	6	7	7	8	8
Weight g	60	60	220	220	230	230	660	660

Valves direct mounting nut

Ordering code
1500.20.F

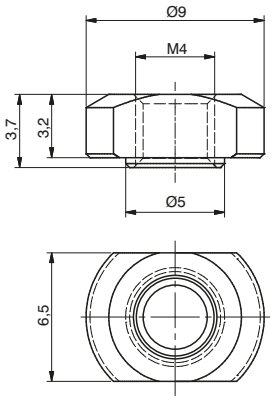

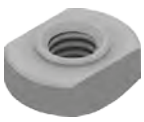

Overall dimensions and technical information are provided solely for informative purposes and may be modified without notice

Flange (MF2)

Ordering code
Ø20-Ø25: **1540.Ø.03F**
Ø32-Ø100: **1380.Ø.03F**

The kit comprises:
n°1 flange (plated zinc steel)
n°4 screws (plated zinc steel)

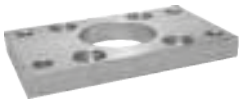

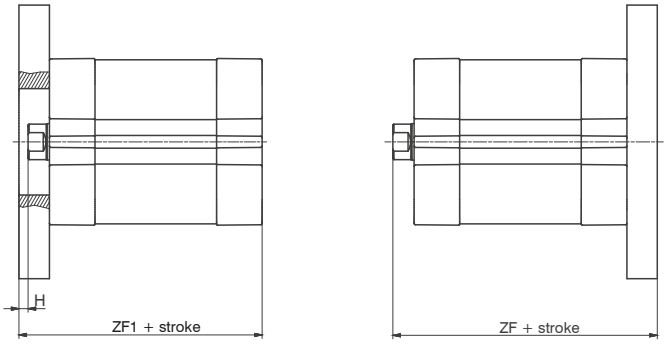

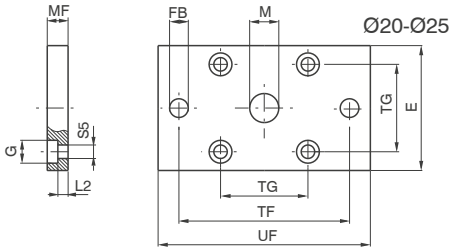

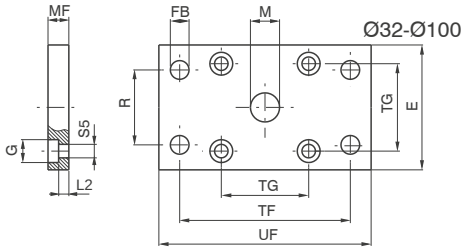

Bore	Ø20	Ø25	Ø32	Ø40	Ø50	Ø63	Ø80	Ø100
E	35	40	45	52	65	75	95	115
FB (H 13)	6.6	6.6	7	9	9	9	12	14
G	9.5	9.5	10.5	10.5	15	15	18	18
M (H 11)	16	16	30	35	40	45	45	55
MF (JS 14)	8	8	10	10	12	12	16	16
R (JS 14)	/	/	32	36	45	50	63	75
TF (JS 14)	55	60	64	72	90	100	126	150
TG	22	26	32.5	38	46.5	56.5	72	89
UF	70	75	80	90	110	120	150	170
ZF	51	53	130	145	155	170	190	205
ZF1	45	47	54	55	57	61	70	83
H	2	2	3	3	4	4	6	6
L2	3	3	5	5	6.5	6.5	8	8
S5	5.5	5.5	6.6	6.6	9	9	11	11
Weight g	125	160	190	250	480	620	1430	1990

Foot (MS1)

Ordering code
1540.Ø.05/1F

The kit comprises:
n°1 foot (plated zinc steel)
n°2 screws (plated zinc steel)

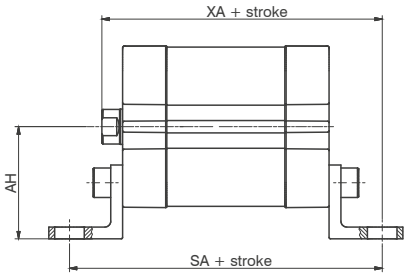

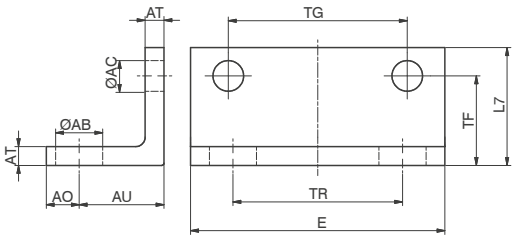

Bore	Ø20	Ø25	Ø32	Ø40	Ø50	Ø63	Ø80	Ø100
AB (H 14)	7	7	7	10	10	10	12	14.5
AC	5.5	5.5	6.5	6.5	8.5	8.5	10.5	10.5
AH	27	29	33.5	38	45	50	63	74
AO (max)	7	7	7	7	9	9	11	13
AT (±0.5)	4	4	4	4	5	5	6	6
AU (±0.2)	16	16	16	18	21	21	26	27
E (max)	35.5	39.5	46.5	54	65	77	95	115
L7	20	20	25	25	30	30	40	45
TF (±0.1)	16	16	17.25	19	21.75	21.75	27	29.5
TG (±0.2)	22	26	32.5	38	46.5	56.5	72	89
TR (JS 14)	22	26	32	36	45	50	63	75
SA	69	71	76	81	87	91	106	121
XA	59	61	67	70	74	78	90	104
Weight g	40	45	60	70	130	160	300	405

Rear female clevis (MP2)

Ordering code	
Aluminium:	**1380.Ø.09F**
Steel:	**1320.Ø.20F**

The kit comprises:
n°1 clevis (steel or painted aluminium)
n°4 screws (plated zinc steel)
n°1 pin (plated zinc steel)
n°2 circlips (steel)

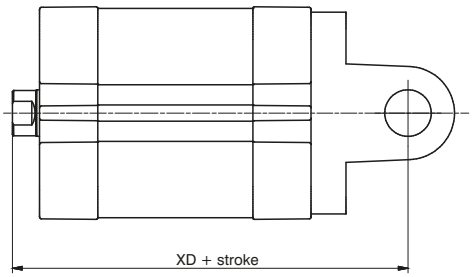

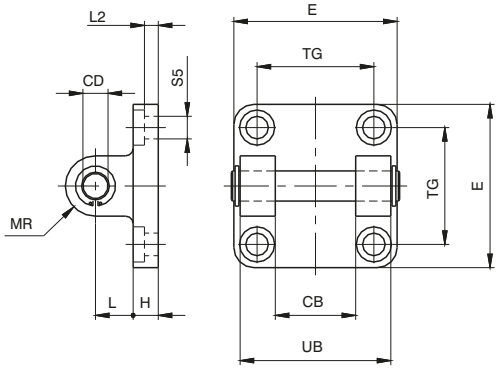

Bore		Ø32	Ø40	Ø50	Ø63	Ø80	Ø100
CB (H 14)		26	28	32	40	50	60
CD		10	12	12	16	16	20
E	Aluminium	45	52	65	75	95	115
	Steel	45	55	65	75	95	115
H	Aluminium	9	9	11	11	14	14
	Steel	10	10	10	12	14	16
L	Aluminium	13	16	16	21	22	27
	Steel	12	15	17	20	22	25
MR		10	12	12	16	16	20
TG		32.5	38	46.5	56.5	72	89
UB (h14)		45	52	60	70	90	110
XD		73	77	80	83	100	118
L2(±0.5)		5.5	5,5	6.5	6.5	10	10
S5		6.6	6.6	9	9	11	11
Weight	Aluminium	80	130	185	310	530	910
g	Steel	180	290	400	670	1160	2000

Narrow rear female trunnion (AB6)

Ordering code	
Aluminium:	**1380.Ø.30F**
Steel:	**1320.Ø.29F**

The kit comprises:
n°1 clevis (plated zinc steel or painted)
n°4 screws (plated zinc steel)
n°1 pin (plated zinc steel) complete with elastic pin and ring

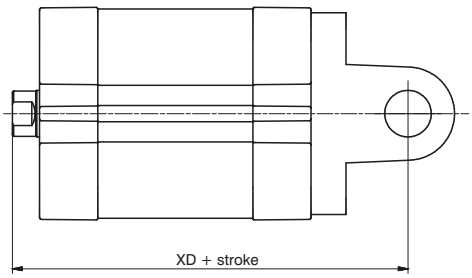

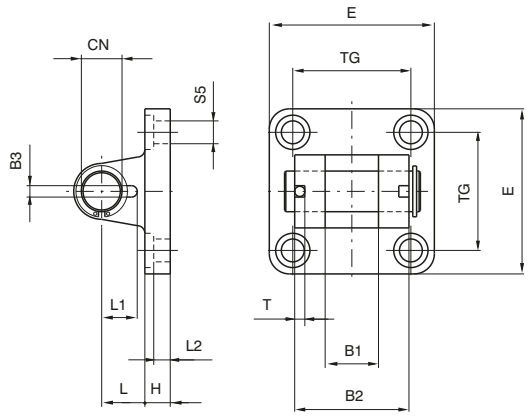

Bore		Ø32	Ø40	Ø50	Ø63	Ø80	Ø100
B1 (H 14)		14	16	21	21	25	25
B2 (d 12)		34	40	45	51	65	75
B3 ($^{+0.2}_{-0}$)		3.3	4.3	4.3	4.3	4.3	6.3
CN		10	12	16	16	20	20
E	Aluminium	45	52	65	75	95	115
	Steel	45	55	65	75	95	115
H	Aluminium	9	9	11	11	14	14
	Steel	10	10	10	12	14	16
L	Aluminium	13	16	16	21	22	27
	Steel	12	15	17	20	22	25
L1		11.5	12	14	14	16	16
L2 (±0.5)		5,5	5.5	6.5	6.5	10	10
S5		6,6	6.6	9	9	11	11
T		3	4	4	4	4	4
TG		32.5	38	46.5	56.5	72	89
XD		73	77	80	89	100	118
Weight	Aluminium	70	115	200	290	570	820
g	Steel	160	270	370	670	1110	2100

Overall dimensions and technical information are provided solely for informative purposes and may be modified without notice

Rear male clevis (MP4)

Ordering code		
Aluminium:	Ø20-Ø25:	**1580.Ø.09/1F**
	Ø32-Ø100:	**1380.Ø.09/1F**
Steel:	Ø20-Ø25:	**1580.Ø.09/2F**
	Ø32-Ø100:	**1320.Ø.21F**

The kit comprises:
n°1 clevis (steel or painted aluminium)
n°4 screws (plated zinc steel)
n°1 pin (plated zinc steel) *
n°2 circlips (steel)

* (from Ø32)

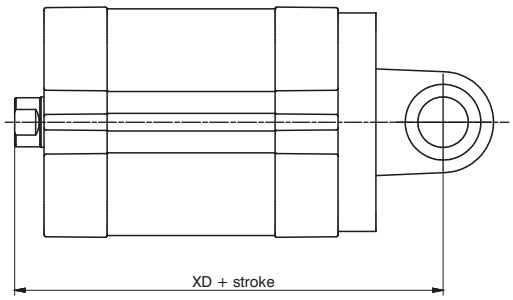

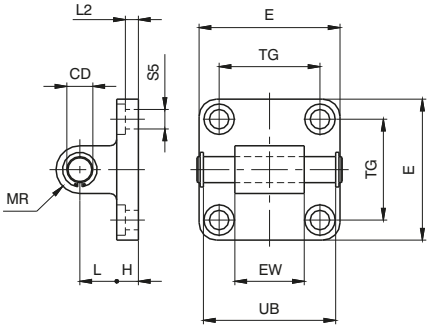

Bore		Ø20	Ø25	Ø32	Ø40	Ø50	Ø63	Ø80	Ø100
CD		8(H9)	8(H9)	10	12	12	16	16	20
E	Aluminium	34	38	45	52	65	75	95	115
	Steel	34	38	45	55	65	75	95	115
EW		16(h14)	16(h14)	26($^{-0,2}_{-0,6}$)	28($^{-0,2}_{-0,6}$)	32($^{-0,2}_{-0,6}$)	40($^{-0,2}_{-0,6}$)	50($^{-0,2}_{-0,6}$)	60($^{-0,2}_{-0,6}$)
H	Aluminium	6	6	9	9	11	11	14	14
	Steel	/	/	10	10	10	12	14	16
L	Aluminium	14	14	13	16	16	21	22	27
	Steel	/	/	12	15	17	20	22	25
MR		8	8	10	12	12	16	16	20
TG		22	26	32,5	38	46,5	56,5	72	89
UB ($^{-0,5}_{-0}$)		/	/	46	53	61	71	91	111
XD		63	65	73	77	80	89	100	118
L2 (±0.5)		2,6	2,6	5,5	5,5	6,5	6,5	10	10
S5		5,5	5,5	6,6	6,6	9	9	11	11
Weight	Aluminium	25	28	90	130	190	340	580	960
g	Steel	70	80	210	330	430	810	1350	2400

Rear male clevis (with jointed head MP6)

Ordering code	
Aluminium:	**1380.Ø.15F**
Steel:	**1320.Ø.25F**

The kit comprises:
n°1 clevis (steel or painted aluminium)
n°4 screws (plated zinc steel)

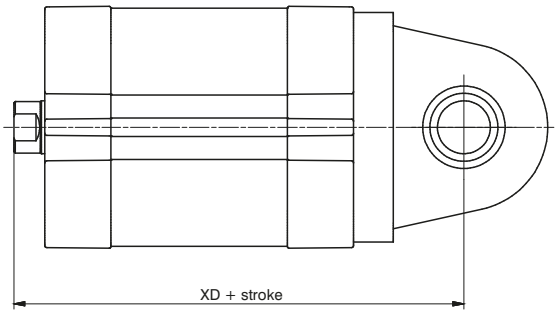

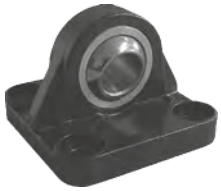

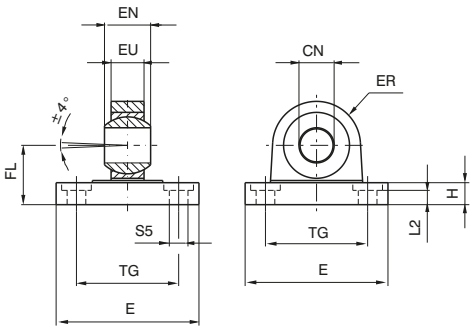

Bore		Ø32	Ø40	Ø50	Ø63	Ø80	Ø100
CN (H 7)		10	12	16	16	20	20
E	Aluminium	45	52	65	75	95	115
	Steel	45	55	65	75	95	115
EN (-0.1)		14	16	21	21	25	25
ER	Aluminium	16	19	21	24	28.5	30
	Steel	15	18	20	23	27	30
EU		10.5	12	15	15	18	18
FL (JS 15)		22	25	27	32	36	41
H	Aluminium	9	9	11	11	14	14
	Steel	10	10	10	12	14	16
L2 (±0.5)		5.5	5.5	6.5	6.5	10	10
S5		6.6	6.6	9	9	11	11
TG		32.5	38	46.5	56.5	72	89
XD		73	77	80	89	100	118
Weight	Aluminium	60	100	180	245	480	650
g	Steel	210	310	400	710	1350	2400

Square angle trunnion (AB7)

Ordering code	
Aluminium:	**1380.Ø.35F**
Steel:	**1320.Ø.23F**

The kit comprises:
n°1 clevis (steel or painted aluminium)
n°1 counter clevis, square
(steel or painted aluminium)
n°4 screws (plated zinc steel)
n°1 pin (plated zinc steel)
n°2 circlips (steel)

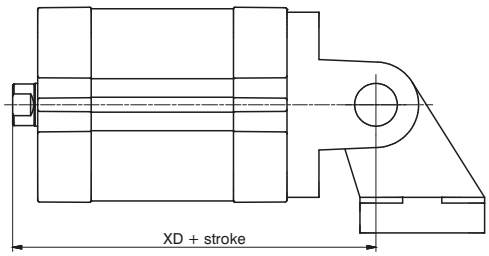

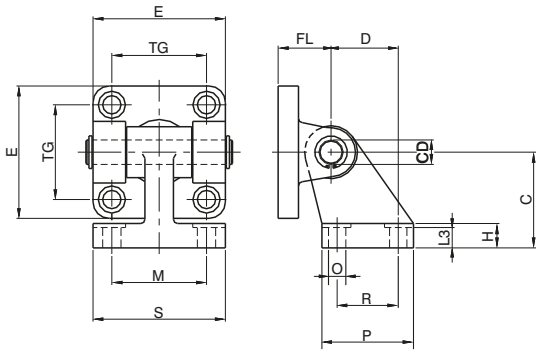

Bore		Ø32	Ø40	Ø50	Ø63	Ø80	Ø100
E	Aluminium	45	52	65	75	95	115
	Steel	45	55	65	75	95	115
TG		32.5	38	46.5	56.5	72	89
FL		22	25	27	32	36	41
D (JS14)		21	24	33	37	47	55
CD		10	12	12	16	16	20
C (JS15)		32	36	45	50	63	71
H	Aluminium	8	10	12	14	14	17
	Steel	8	10	12	12	14	15
L3	Aluminium	6.4	8.4	10.4	12.4	11.5	14.5
	Steel	6.5	8.5	10.5	10.5	11.5	12.5
R (JS14)		18	22	30	35	40	50
P		31	35	45	50	60	70
O (H13)		6.6	6.6	9	9	11	11
S		51	54	65	67	86	96
M (JS14)		38	41	50	52	66	76
XD		73	77	80	89	100	118
Weight g	Aluminium	120	180	225	435	730	1220
	Steel	340	500	640	1250	2100	3500

Square angle trunnion (with joined head)

Ordering code	
Steel:	**1320.Ø.27F**

The kit comprises:
n°1 clevis (painted steel)
n°1 counter clevis square
with joined head (painted steel)
n°4 screws (plated zinc steel)
n°1 pin (plated zinc steel)
n°2 circlips (steel)

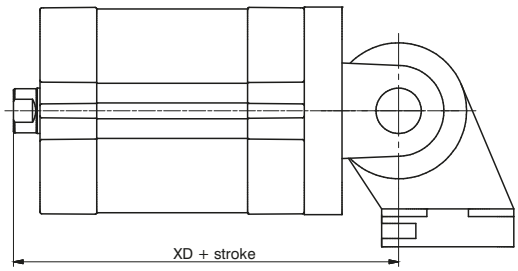

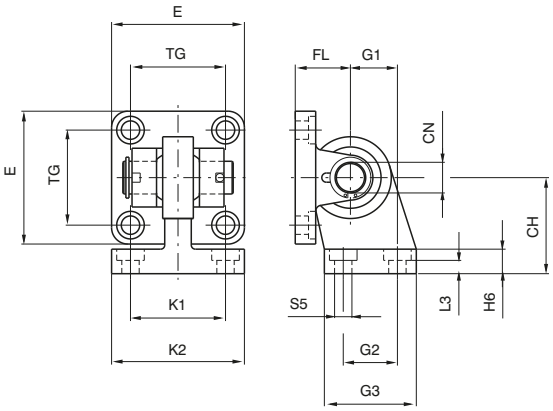

Bore	Ø32	Ø40	Ø50	Ø63	Ø80	Ø100
CH (JS 15)	32	36	45	50	63	71
CN	10	12	16	16	20	20
E	45	55	65	75	95	115
FL (JS 15)	22	25	27	32	36	41
G1 (JS 15)	21	24	33	37	47	55
G2 (JS 14)	18	22	30	35	40	50
G3	31	35	45	50	60	70
H6	10	10	12	12	14	15
K1 (JS 14)	38	41	50	52	66	76
K2	51	54	65	67	86	96
L3 ($^{+0.5}_{0}$)	8,5	8,5	10,5	10,5	11,5	12,5
S5	6,6	6,6	9	9	11	11
TG	32,5	38	46,5	56,5	72	89
XD	73	77	80	89	100	118
Weight g	330	480	830	1220	2100	3580

Overall dimensions and technical information are provided solely for informative purposes and may be modified without notice

Square angle trunnion (not specified by ISO-VDMA standard)

Ordering code
Aluminium: **1380.Ø.11F**

The kit comprises:
n°1 clevis (painted aluminium)
n°1 counter clevis square (painted aluminium)
n°4 screws (plated zinc steel)
n°1 pin (plated zinc steel)
n°2 circlips (steel)

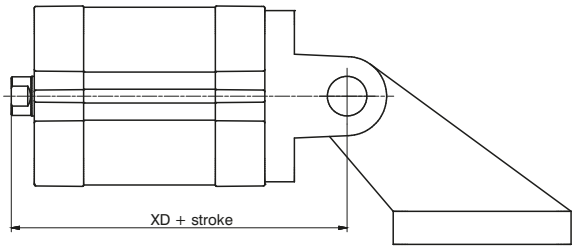

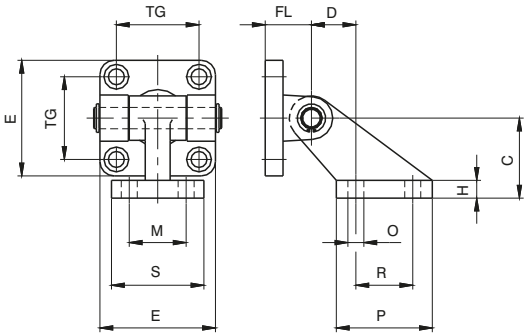

Bore	Ø32	Ø40	Ø50	Ø63	Ø80	Ø100
C (±0,2)	32	45	45	63	63	90
D (±0,5)	18	25	25	32	32	40
E	45	52	65	75	95	115
H	8	10	10	12	12	17
FL	22	25	27	32	36	41
M (JS 14)	25	32	32	40	40	50
TG	32,5	38	46,5	56,5	72	89
O (H 13)	7	9	9	11	11	14
P	37	54	54	75	75	103
R (JS 14)	20	32	32	50	50	70
S	41	52	52	63	63	80
XD	73	77	80	89	100	118
Weight g	130	260	330	600	820	1560

Square angle trunnion (with joined head)

Ordering code	
Aluminium:	**1380.Ø.36F**
Steel:	**1320.Ø.26F**

The kit comprises :
n°1 clevis (steel or painted aluminium)
n°1 counter clevis with joined head (steel or painted aluminium)
n°4 screws (plated zinc steel)
n°1 pin (plated zinc steel) complete with elastic pin and ring

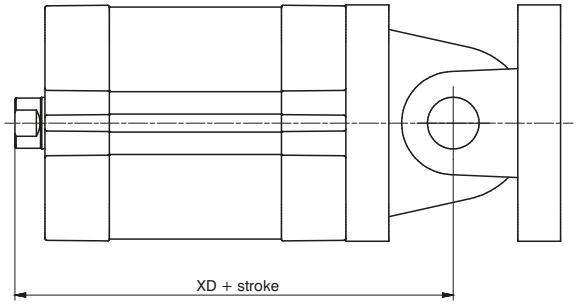

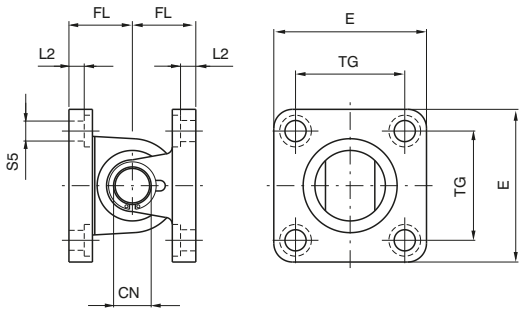

Bore		Ø32	Ø40	Ø50	Ø63	Ø80	Ø100
CN		10	12	16	16	20	20
E	Aluminium	45	52	65	75	95	115
	Steel	45	55	65	75	95	115
FL (JS 15)		22	25	27	32	36	41
L2 (±0.5)		5.5	5.5	6.5	6.5	10	10
S5		6.6	6.6	9	9	11	11
TG		32.5	38	46.5	56.5	72	89
XD		73	77	80	89	100	118
Weight g	Aluminium	130	215	380	535	1050	1470
	Steel	380	580	770	1380	2460	4500

Standard trunnion (not specified by ISO-VDMA standard)

Ordering code
Aluminium: **1380.Ø.10F**

The kit comprises:
n°1 clevis (painted aluminium)
n°1 counter clevis (painted aluminium)
n°4 screws (plated zinc steel)
n°1 pin (plated zinc steel)
n°2 circlips (steel)

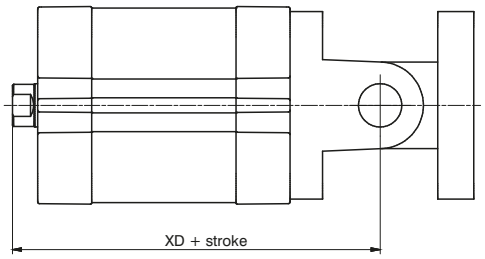

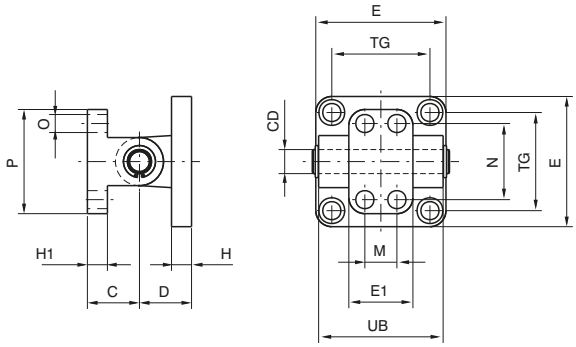

Bore	Ø32	Ø40	Ø50	Ø63	Ø80	Ø100
C (±0,2)	18	26	26	34	34	41
CD	10	12	12	16	16	20
D	22	25	27	32	36	41
E	45	52	65	75	95	115
E1	25	32	32	46	46	56
H	10	10	12	12	16	16
H1	8	10	10	12	12	16
M (±0,2)	-	16	16	25	25	32
N (±0,2)	28	38	38	54	54	90
O	7	9	9	11	11	14
P	40	52	52	75	75	115
TG	32,5	38	46,5	56,5	72	89
UB	45	52	60	70	90	110
XD	73	77	80	89	100	118
Weight g	110	190	240	490	710	1290

Complete standard trunnion

Ordering code
Steel: **1320.Ø.22F**

The kit comprises:
n°1 clevis (painted steel)
n°1 counter clevis (painted steel)
n°4 screws (plated zinc steel)
n°1 pin (plated zinc steel)
n°2 circlips (steel)

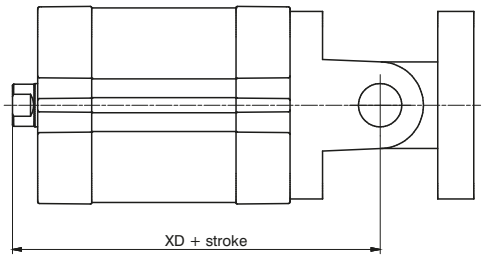

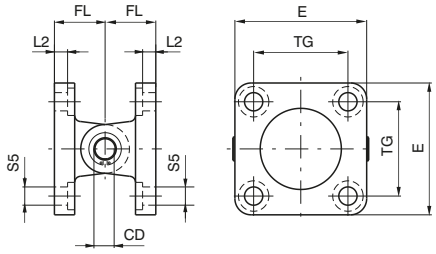

Bore	Ø32	Ø40	Ø50	Ø63	Ø80	Ø100
CD	10	12	12	16	16	20
E	45	55	65	75	95	115
FL	22	25	27	32	36	41
L 2 (±0.5)	5,5	5,5	6,5	6,5	10	10
S 5	6,6	6,6	9	9	11	11
TG	32,5	38	46,5	56,5	72	89
XD	73	77	80	89	100	118
Weight g	360	580	780	1370	2370	4110

Overall dimensions and technical information are provided solely for informative purposes and may be modified without notice

Alternative fixing options

Frontal mounting:
- from Ø20 to Ø40 bolt head
- the use of non-magnetic screws is recommended

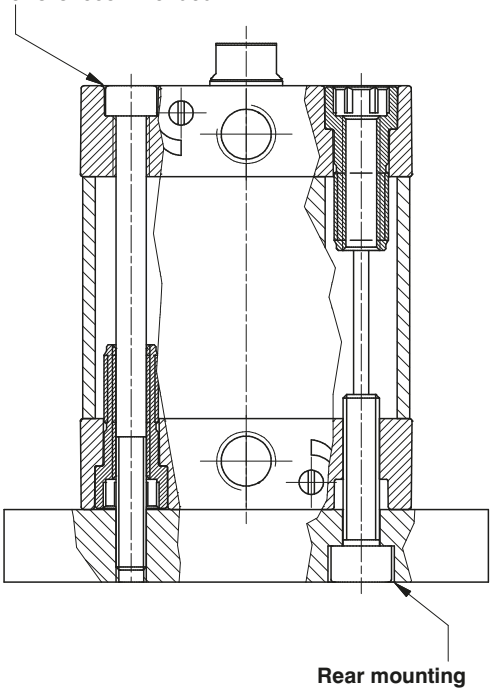

Admissible maximum radial load diagram

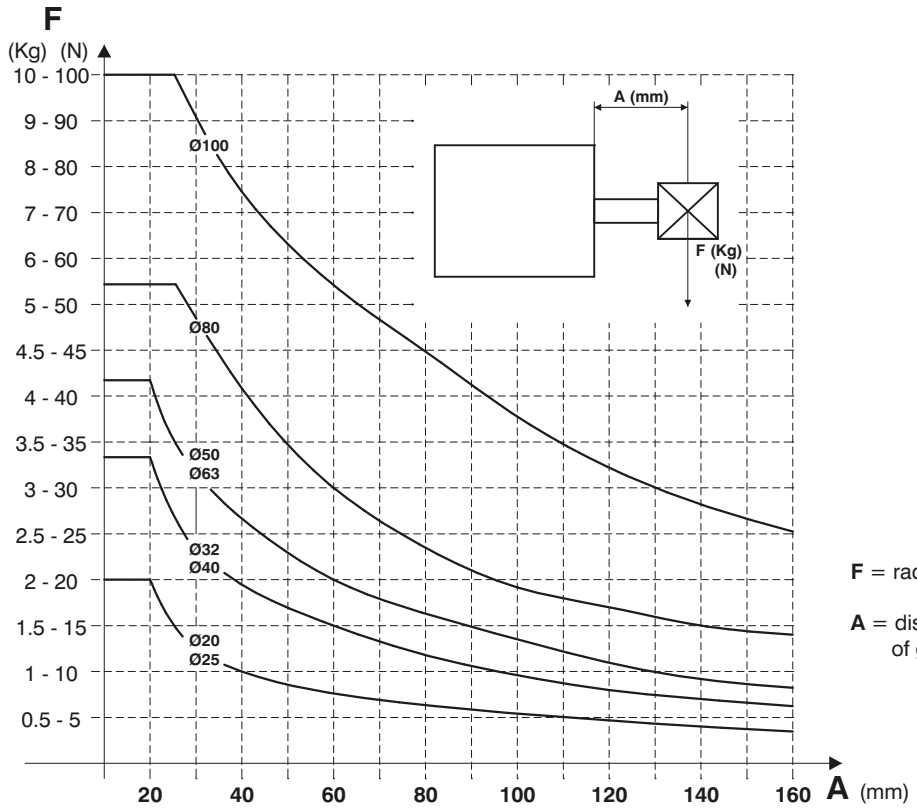

F = radial load (Kg and N)

A = distance between the load (F) centre of gravity and the cylinder front end cap

The diagram shows the maximum Radial load F (in Newtons) that can be applied to the cylinder piston rod as a function of the distance **A** (in mm); based upon the standard version cylinder under static conditions

End of stroke cushioning capacity diagram

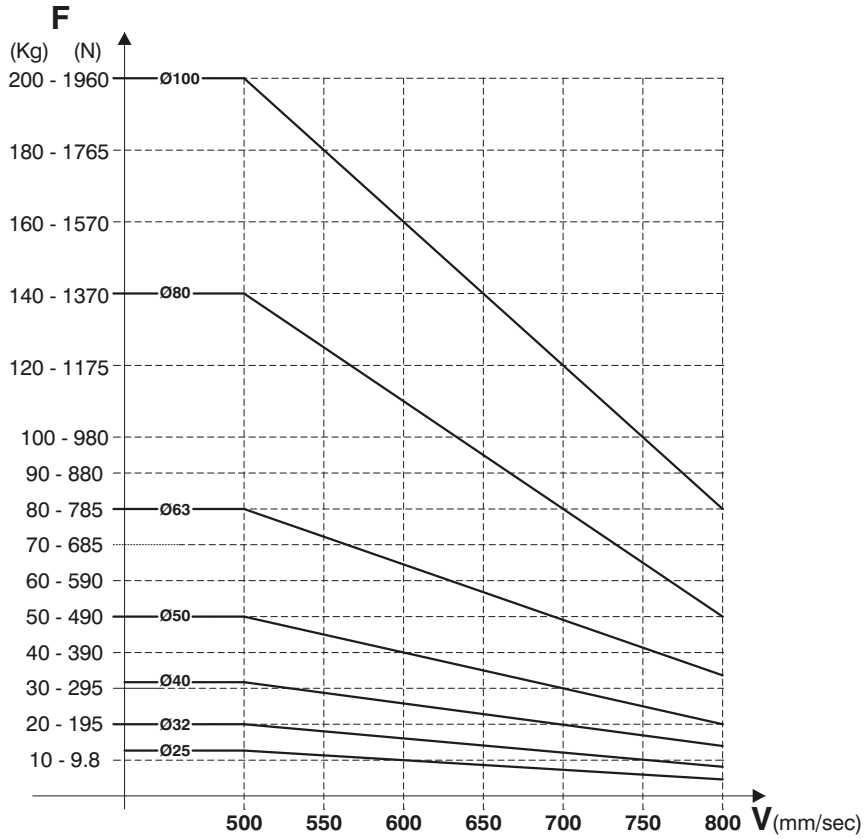

F= moved cylinder load (Kg and N)

V= load speed

The diagram shows, for each diameter, the safety curves relative to the maximum loads which can be moved by the cylinder in function of it's speed **V**. The data has been calculated under the following test conditions:
Cylinder mounted vertically with the rod pointing down, air pressure at 5 bar and with a guided load.
Important: Do not exceed the recommended values in the table as reduced life or damage to the cylinder may result.

Overall dimensions and technical information are provided solely for informative purposes and may be modified without notice

Series 1200, Special performance microbore cylinders

General

These microbore cylinders are not subject to a standard; they are single acting with a front spring, can be either hexagonal or round bodied and either completely threaded or threaded with a plain rod ending.
They are available with M5 connections or with incorporated quick fittings.

Construction characteristics

Body	nickel-plated brass
Rod / piston	stainless steel (C43 chromed)
Rod bushing	brass
Spring	stainless steel
Seal	NBR

Technical characteristics

Fluid	Filtered air. No lubrication needed, if applied it shall be continuous.
Pressure	min. 3 bar - max. 7 bar
Temperature	min. -5°C - max. +70°C

"Attention: Dry air must be used for application below 0°C

Threaded body, round execution

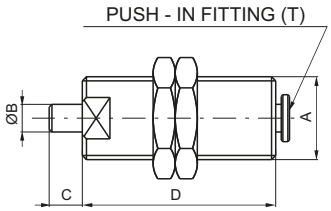

Ordering code	Bore	Stroke	A	B	C	D	T
1213.6.5	6	5	M10x1	3	5	30,5	4/2
1213.6.10	6	10	M10x1	3	5	35,5	4/2
1213.6.20	6	20	M10x1	3	5	49,5	4/2
1213.8.5	8	5	M12x1	3	6	28	4/2
1213.10.3	10	3	M15x1,5	5	1	44	4/2
1213.10.5	10	5	M15x1,5	5	5	40	4/2
1213.10.10	10	10	M15x1,5	5	12	44	4/2

Threaded body, hexagonal execution

Ordering code	Description
1213.Ø.stroke.C	Single acting front spring
1213.Ø.stroke.CF	Single acting front spring threaded body

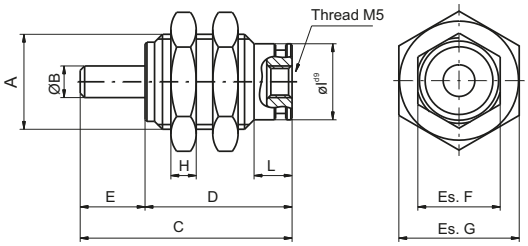

Single acting front spring

Single acting front spring threaded rod

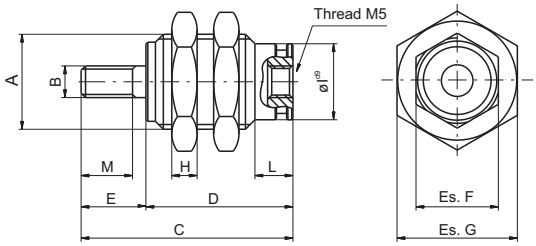

Ø Cil.	Stroke	A	ØB	B	C	D	E	Es. F	Es. G	H	ØI	L	M
6	5	M10x1	Ø3	M3x0.5	27,5	18,5	9	9	12	3	Ø8,5	6	7
6	10	M10x1	Ø3	M3x0.5	34,5	25,5	9	9	12	3	Ø8,5	6	7
6	15	M10x1	Ø3	M3x0.5	41,5	32,5	9	9	12	3	Ø8,5	6	7
10	5	M15x1.5	Ø5	M4x0.7	32,5	20,5	12	13	19	4	Ø12	6	10
10	10	M15x1.5	Ø5	M4x0.7	39	27	12	13	19	4	Ø12	6	10
10	15	M15x1.5	Ø5	M4x0.7	46	34	12	13	19	4	Ø12	6	10
16	5	M22x1.5	Ø6	M5x0.8	37,5	23,5	14	20	27	5	Ø19	7	12
16	10	M22x1.5	Ø6	M5x0.8	43,5	29,5	14	20	27	5	Ø19	7	12
16	15	M22x1.5	Ø6	M5x0.8	50	36	14	20	27	5	Ø19	7	12

Front fixing microbore cylinders

Ordering code
1273.4.10

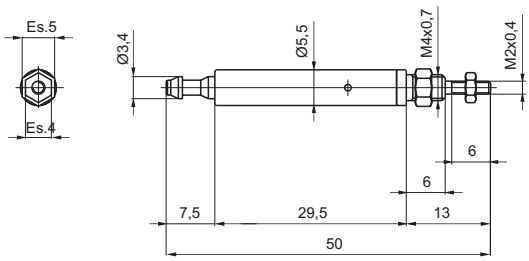

Overall dimensions and technical information are provided solely for informative purposes and may be modified without notice

Series 1325-1326-1345-1347, twin rod cylinders

Construction characteristics

Front end cap	anodised aluminium
Rear end cap	UNI 5079 aluminium alloy casting
Rod	C43 chromed steel stainless steel
Barrel	RA=0.3-0.5 anodised aluminium
Cushion bushings	hard aluminium
Piston	vulcanized rubber block on steel core with incorporated permanent magnet, or without magnet for non magnetic version (plus spacer).
Flange	zinc plated steel
Rod seal	PUR
Other seals	NBR 80 shore rubbber
Cushioning adjustment screw	nickel-plated steel

Operational characteristics

Fluid	Filtered air. No lubrication needed, if applied it shall be continuous.
Max. pressure	10 bar
Working temperature	-5°C - +70°C

Please follow the suggestions below to ensure a long life for these cylinders:
- use clean and lubricated air
- correct alignment during assembly with regard to the applied load so as to avoid radial components or bending the rod.
- avoid high speeds together with long strokes and heavy loads: this would produce kinetic energy which the cylinder cannot absorb, especially if used as a limit stop (in this case use mechanical stop device)
- evaluate the environmental characteristics of cylinder used (high temperature, hard atmosphere, dust, humidity etc.)

Please note: air must be dried for applications with lower temperature.
Use hydraulic oils H class (ISO VG32) for correct continued lubrication.
Our Technical Department will be glad to help.

Cushioning lengths

Bore	Ø	32	40	50	63	80	100
Front length	mm	22	22	24	32	32	32
Rear length	mm	28	32	32	40	44	50

Standard strokes

Ø32 25 - 50 - 75 - 100 - 150 - 200 mm
Ø40 25 - 50 - 75 - 100 - 150 - 200 - 250 mm
Ø50 25 - 50 - 75 - 100 - 150 - 200 - 250 - 300 mm
Ø63 25 - 50 - 75 - 100 - 150 - 200 - 250 - 300 - 350 mm
Ø80 25 - 50 - 75 - 100 - 150 - 200 - 250 - 300 - 350 - 400 - 500 mm
Ø100 25 - 50 - 75 - 100 - 150 - 200 - 250 - 300 - 350 - 400 - 500 mm

On request are available strokes up to 1000 mm

Stroke tolerance (ISO 15552)

Bore	Stroke	Tolerance
32 - 40 - 50 63 - 80 - 100	up to 500 mm	+2 0

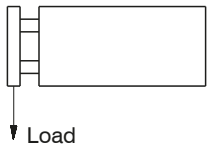

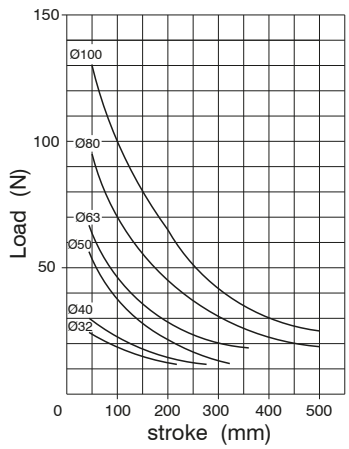

Basic version

Ordering code
1325.Ø.stroke.01 magnetic **1326.Ø.stroke.01** non magnetic **1325.Ø.stroke.01X** magnetic stainless steel rod **1326.Ø.stroke.01X** non magnetic stainless steel rod

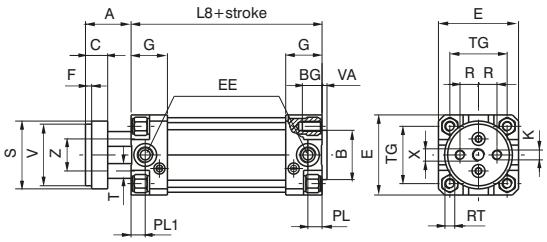

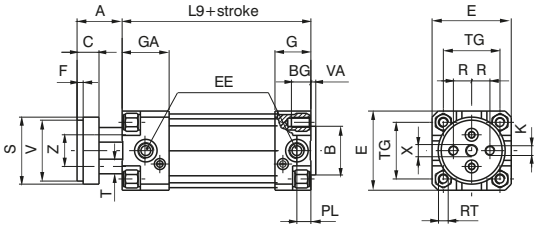

Bore			32	40	50	63	80	100
A			26	30	37	37	46	51
AM			22	24	32	32	40	40
B			30	35	40	45	45	55
BG			12	12	16	16	20	20
C			15	15	18	22	22	22
E			46	52	65	75	95	115
EE			G 1/8"	G 1/4"	G 1/4"	G 3/8"	G 3/8"	G 1/2"
F			4	4	5	5	5	5
G			25	29	29,5	36	36	40
GA			50	54	54,5	61	61	65
K			M6	M8	M8	M10	M12	M12
L8			94	105	106	121	128	138
L9			119	130	131	146	153	163
PL			9	11,5	13	14	16	18
PL1			9,5	11	10,5	14	13	15
R			9,5	11,25	15	19	25	35
RT			M6	M6	M8	M8	M10	M10
S			35	45	55	70	85	105
T			8	10	12	16	20	20
TG			32,5	38	46,5	56,5	72	89
V			32	40	50	63	80	100
VA			4	4	4	4	4	4
Z			18	22	26	35	40	50
WH			26	30	37	37	46	51
X			M8	M10	M10	M12	M14	M14
Weight g	Stroke 0	Basic version	560	810	1380	2300	3680	5740
		Extended ver.	650	950	1500	2500	4100	6300
every 10 mm			20	26	30	40	80	90

Extended front cap

1345.Ø.stroke.01 magnetic **1347.Ø.stroke.01** non magnetic **1345.Ø.stroke.01X** magnetic stainless steel rod **1347.Ø.stroke.01X** non magnetic stainless steel rod

Through rod cylinder version with ISO standard

Ordering code	
1325.Ø.stroke.02	magnetic
1326.Ø.stroke.02	non magnetic
Rods opions	
1325.Ø.stroke.02X	magnetic stainless steel rod
1326.Ø.stroke.02X	non magnetic stainless steel rod

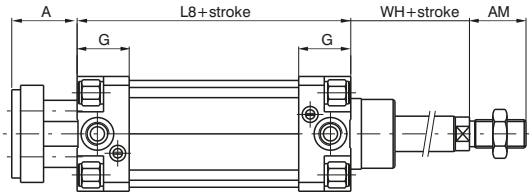

Through rod twin cylinder version

Ordering code	
1325.Ø.stroke.06	magnetic
1326.Ø.stroke.06	non magnetic
Rods opions	
1325.Ø.stroke.06X	magnetic stainless steel rod
1326.Ø.stroke.06X	non magnetic stainless steel rod

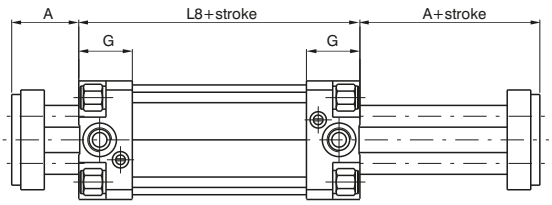

Overall dimensions and technical information are provided solely for informative purposes and may be modified without notice

Magnetic sensors

For sensor and sensor support bracket please refer to the 1319 and 1320 series.

Accessories

All of the attachments of the ISO 15552 can be mounted, with the exclusion of the front flange and the foot mounting bracket that, although they are part of the same series, need a small adjustment in the exit zone of the rods. For these there is a different code and the dimensions are indicated below.

Threaded Nipple

Ordering code
1325.Ø.17F

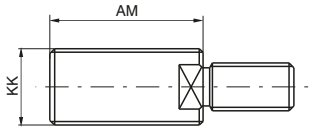

Bore	32	40	50	63	80	100
AM	22	24	32	35	40	40
KK	M10x1,25	M12x1,25	M16x1,5	M16x1,5	M20x1,5	M20x1,5
Weight g	17	27	63	65	110	110

Front Flange

Ordering code
1325.Ø.03F

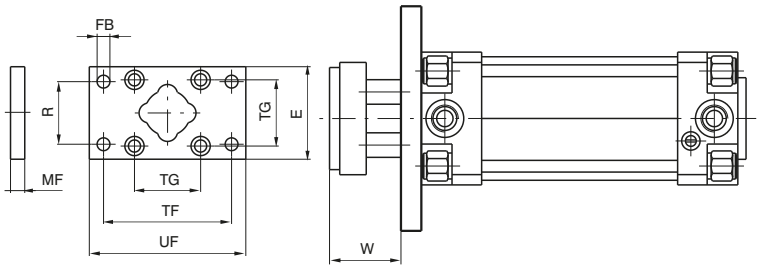

Bore	32	40	50	63	80	100
E	45	52	65	75	95	115
FB (H13)	7	9	9	9	12	14
MF (JS 14)	10	10	12	12	16	16
R (JS 14)	32	36	45	50	63	75
TF (JS 14)	64	72	90	100	126	150
TG	32,5	38	46,5	56,5	72	89
UF	80	90	110	120	150	170
W	16	20	25	25	30	35
Weight g	160	250	480	620	1430	3500

Front foot mounting bracket (short)

Ordering code
1325.Ø.05/1F (1 piece)

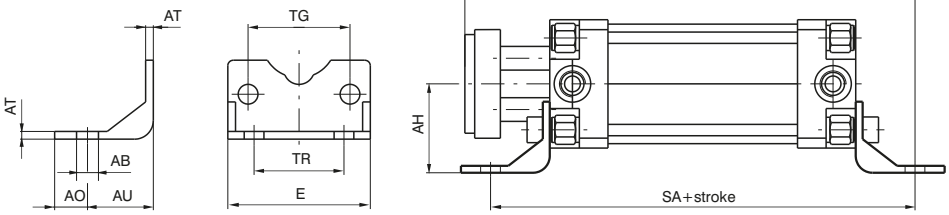

Bore	32	40	50	63	80	100
AB (H14)	7	9	9	9	12	14
AH (JS 15)	32	36	45	50	63	71
AO (± 0,2)	11	8	13	13	14	15
AT	3,5	3,5	3,5	4,5	5	5
AU	24	28	32	32	41	41
E	45	52	65	75	95	115
SA	142	161	170	185	210	220
TG	32,5	38	46,5	56,5	72	89
TR (JS 14)	32	36	45	50	63	75
XA	144	163	175	190	215	230
Weight g	50	70	120	180	320	400

Series 1370 - 1371 - 1372 - 1373 - ECOFLAT

General

Profiled tube has two "T" slots on the side hosting sensors 1580._, MRS._, MHS._. without adaptors.
Two additional connections are also available on rear cover for cylinder feeding.

Construction characteristics

End caps	aluminium anodised
Rod	C43 chromed steel or stainless steel
Barrel	aluminium alloy anodised
Piston	acetal resin, aluminium on request
Piston-seal	PUR
Rod-seal	PUR (FPM upon request)
Adjusting screw	zinc plated steel
Shock absorber	NBR

Operational characteristics

Fluid	Filtered air. No lubrication needed, if applied it shall be continuous.
Max. pressure	10 bar
Operating temperature	-5°C - +70°C

Please follow the suggestions below to ensure a long life for these cylinders:
- use clean and lubricated air
- correct alignment during assembly with regard to the applied load so as to avoid radial components or bending the rod;
- avoid high speeds together with long strokes and heavy loads: this would produce kinetic energy which the cylinder cannot absorb, especially if used as a limit stop (in this case use mechanical stop device and aluminium piston);
- evaluate the environmental characteristics of cylinder used (high temperature, hard atmosphere, dust, humidity etc.)

Please note: air must be dried for applications with lower temperature.
Use hydraulic oils H class (ISO VG32) for correct continued lubrication.
Our Technical Department will be glad to help.

Maximum standard strokes

Size 25	200 mm
Size 32 - 63	320 mm

Sections (cm^2)

Size	25	32	40	50	63
Out stroke (cm^2)	5,28	8,09	13,09	20,28	32,68
In stroke (cm^2)	4,49	6,96	11,08	17,14	29,54

In order to calculate the theoretical force generated by the unit, both outstroke and instroke, it is necessary to use the following equation
FORCE(Kg) = Surface (cm^2) x Pressure(bar)
It is also necessary to remember that the theoretical force must be reduced by 10-15% in order to account for the unit internal friction.

Maximum rod radial movement (°)

Size	25	32	40	50	63
Rod radial movement	±0.8	±0.7	±0.6	±0.5	±0.4

Maximum torque applicable on the piston rod (Nm):

Size	25	32	40	50	63
Maximum torque	0.8	1	1,3	1,8	2,1

The maximum torque values must also be accounted for while mounting accessories on the piston rod.

Overall dimensions and technical information are provided solely for informative purposes and may be modified without notice

Basic version “1” female rod

Ordering code
SIDE CONNECTION
1370.size.stroke.1 Magnetic chrome plated rod
1371.size.stroke.1 Magnetic stainless steel rod
1372.size.stroke.1 Non magnetic chrome plated rod
1373.size.stroke.1 Non magnetic stainless steel rod
REAR CONNECTION
1370.size.stroke.1.P Magnetic chrome plated rod
1371.size.stroke.1.P Magnetic stainless steel rod
1372.size.stroke.1.P Non magnetic chrome plated rod
1373.size.stroke.1.P Non magnetic stainless steel rod

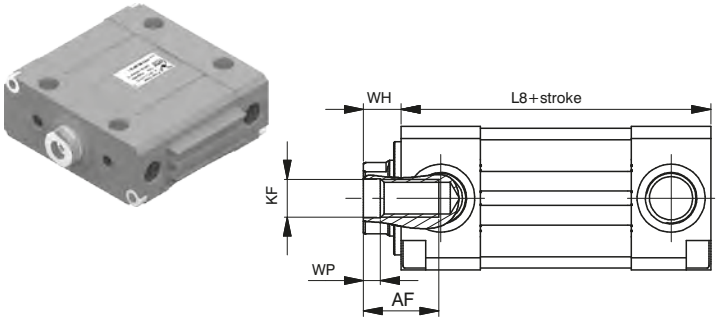

Basic version “2” male rod

Ordering code
SIDE CONNECTION
1370.size.stroke.2 Magnetic chrome plated rod
1371.size.stroke.2 Magnetic stainless steel rod
1372.size.stroke.2 Non magnetic chrome plated rod
1373.size.stroke.2 Non magnetic stainless steel rod
REAR CONNECTION
1370.size.stroke.2.P Magnetic chrome plated rod
1371.size.stroke.2.P Magnetic stainless steel rod
1372.size.stroke.2.P Non magnetic chrome plated rod
1373.size.stroke.2.P Non magnetic stainless steel rod

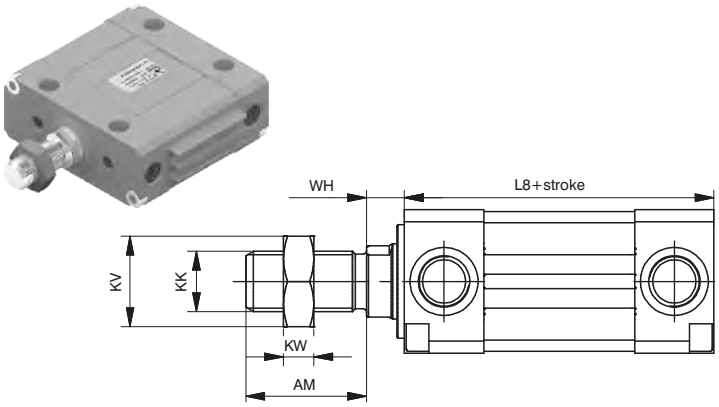

Female through rod cylinder version “3”

Ordering code
1370.size.stroke.3 Magnetic chrome plated rod
1371.size.stroke.3 Magnetic stainless steel rod
1372.size.stroke.3 Non magnetic chrome plated rod
1373.size.stroke.3 Non magnetic stainless steel rod

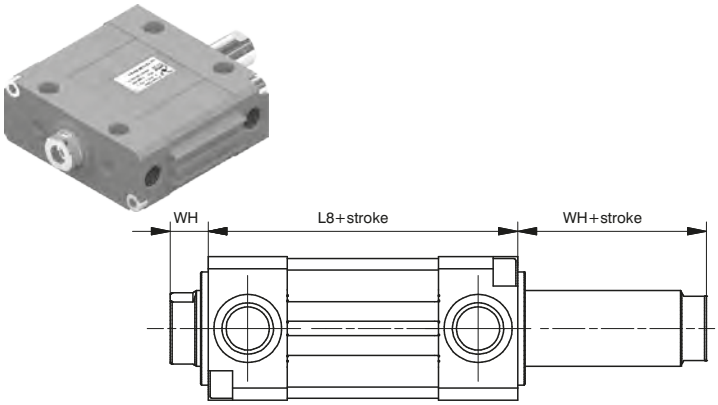

Male through rod cylinder version “4”

Ordering code
1370.Size.stroke.4 Magnetic stelo cromato
1371.Size.stroke.4 Magnetic stelo inox
1372.Size.stroke.4 Non magnetico stelo cromato
1373.Size.stroke.4 Non magnetico stelo inox

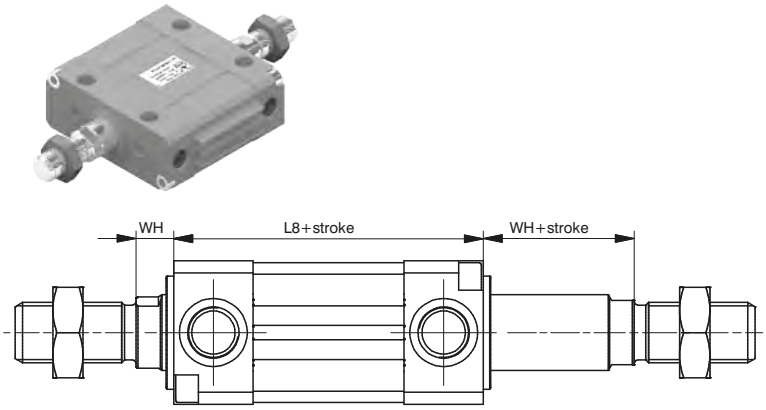

Variants

Ordering code
137_.size.stroke._.K = Version with aluminium piston

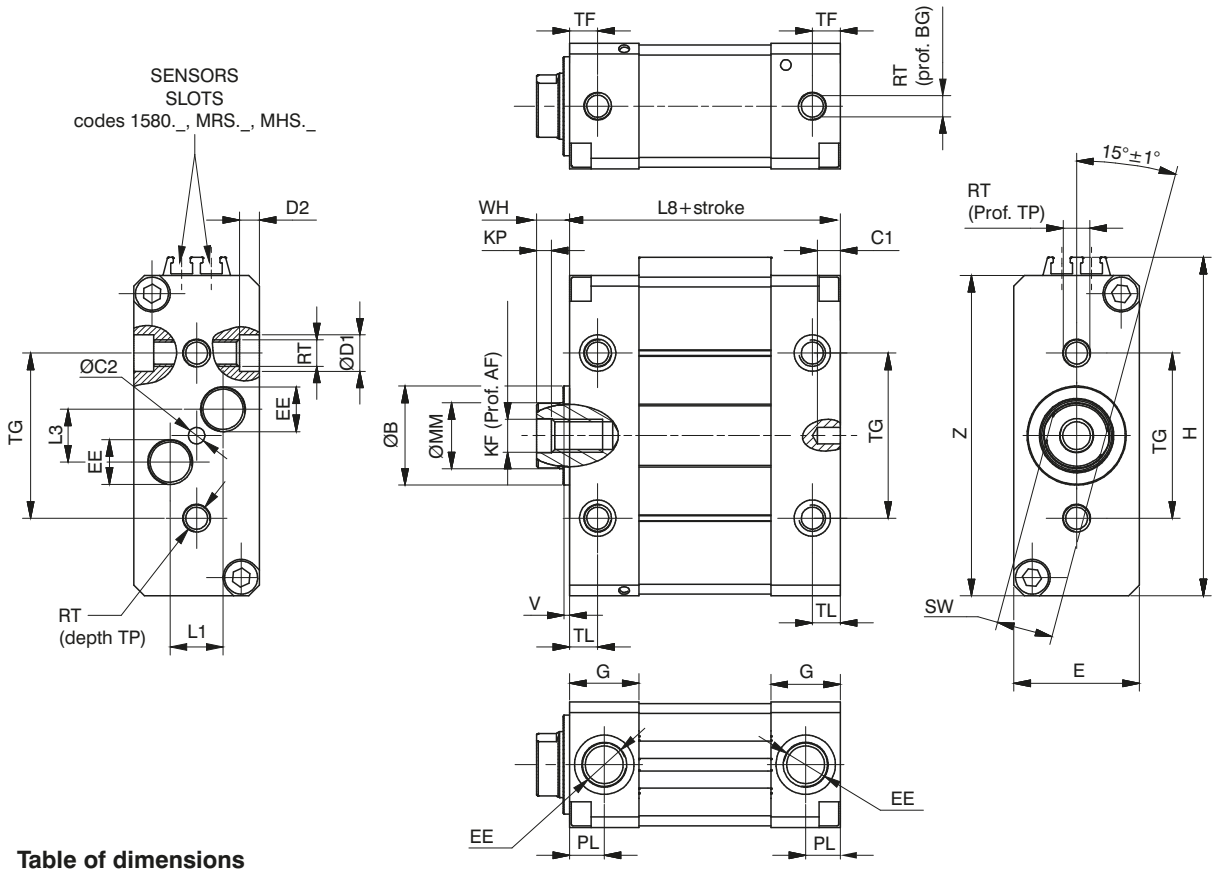

Table of dimensions

Size				25	32	40	50	63
AM				22	22	24	32	32
AF				12	14	16	20	20
Ø B (h9)				16	20	25	30	30
BG				8	9	9	12	14
C1				7	7	7	7	7
C2 (H9)				4	4	4	5	5
Ø D1				8	10	10	11	15
D2				4	4	5	6	6
E				20	24	30	38	50
EE				M5	G1/8"	G1/8"	G1/4"	G1/4"
G				12	17	17	21	21
H				56,5	65,5	82,5	102,5	127
KF				M5	M6	M8	M10	M10
KK				M10x1,25	M10x1,25	M12x1,25	M16x1,5	M16x1,5
KP				2	2,5	3	4,5	4,5
KV				17	17	19	24	24
KW				6	6	7	8	8
L1				6	7,5	7,5	16	19
L3				10	14,5	14,5	16	21
L8				62	72	76	82	82
Ø MM				10	12	16	20	20
PL				6,5	8,5	8,5	10,5	10,5
RT				M5	M6	M6	M8	M10
SW (H13)				8	10	13	17	17
TF				5	8,5	8,5	8,5	8,5
TG				25	32	40	50	60
TL				5	8,5	8,5	8,5	8,5
TP				8	9	9	12	14
V				2	2	2	2	2
VG				30	30	33	42	42
WH				8	8	9	10	10
Z				51	60	77	97	1215
Weight g	Versions	1	stroke 0	180	285	482	848	1350
		2	stroke 0	203	309	520	929	1431
	every 10 mm			22	29	49	79	118
Weight g	Versions	3	stroke 0	195	314	534	959	1478
		4	stroke 0	242	362	610	1096	1615
	every 10 mm			28	38	65	103	143

Overall dimensions and technical information are provided solely for informative purposes and may be modified without notice

Front and rear flange

Ordering code
1370.Size.03

Size 25-32-40

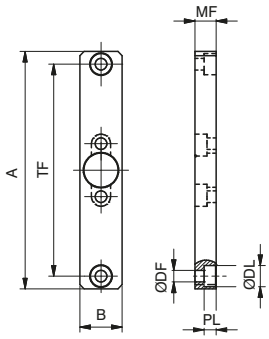

Size 50-63

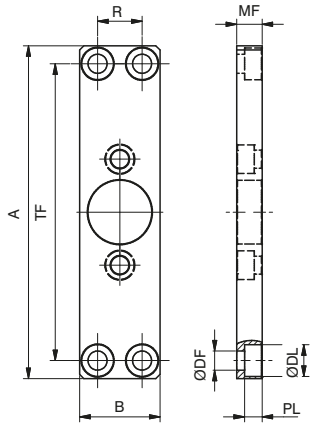

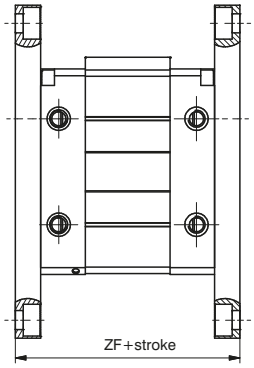

Plate which allows anchorage of the cylinder at a right angle to the plane. Mounted to the cylinder by screws.

Size	25	32	40	50	63
A	112	130	146	157	157
B	20	24	30	38	50
ØDF	5.5	6.6	6.6	9	9
ØDL	10	11	11	15	15
PL	5.7	6.5	6.3	8.3	8.3
MF	10	10	10	12	15
R	/	/	/	21	33
TF	100	115	132	140	140
ZF	82	92	96	106	112

Foot bracket

Ordering code
1370.Size.05/1F (n° 1 piece)

Size 25

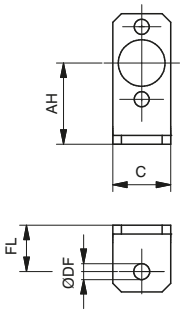

Size 25-40-50-63

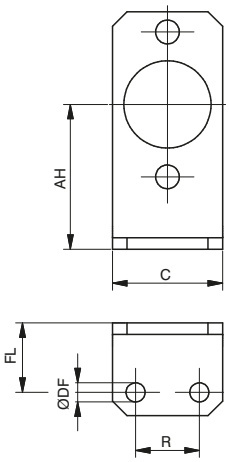

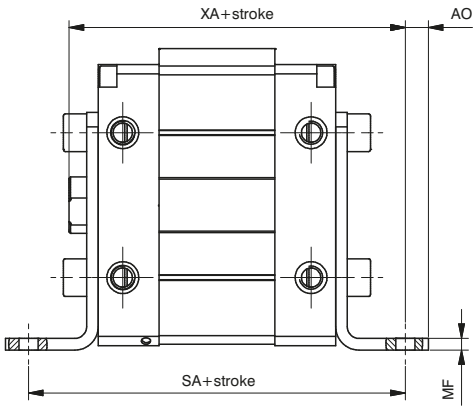

Brackets used to anchor the cylinder parallel to the mounting plane. Manufactured from steel with a rust proof protective treatment. Mounted to the cylinder end caps with bolts.

Size	25	32	40	50	63
AH	28	32	40	50	63
AO	7	5.5	7	8	10
C	20	24	30	38	50
ØDF	5.5	5.5	5.5	6.6	9
FL	16	18	20	24	27
MF	3	3	4	4	4
R	/	13	16	22	30
SA	94	108	116	130	136
XA	86	98	105	116	119

Rear male clevis

Ordering code
1370.Size.09/1F

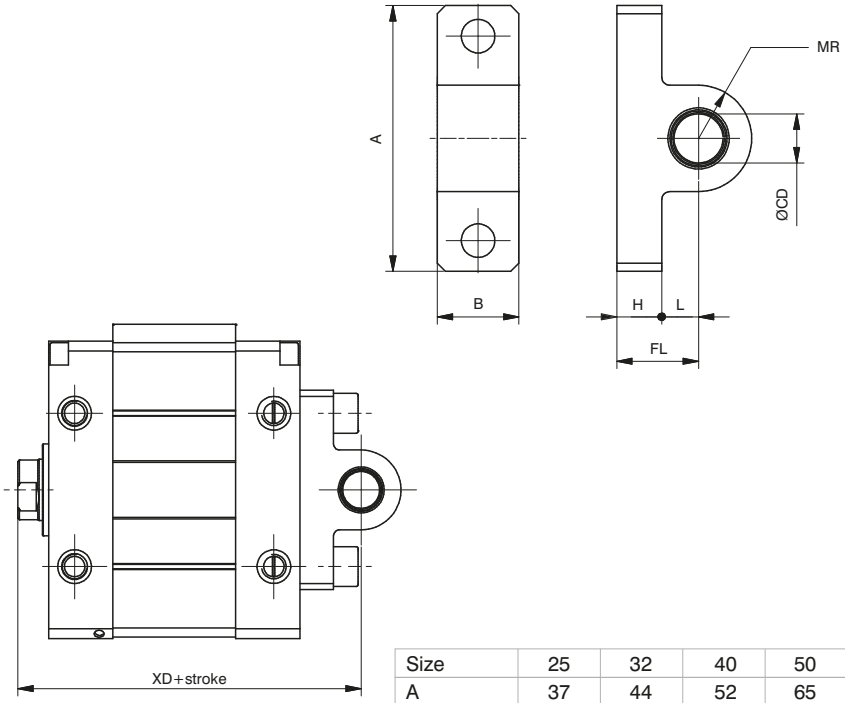

This type of mounting allows anchorage of the cylinder either parallel or right angle to plane; the cylinder rod can oscillate and self-align as necessary when under load.

Size	25	32	40	50	63
A	37	44	52	65	78
B	9	10.5	10.5	20	25
ØCD (H7)	8	10	12	12	16
FL	14	15	18	20	24
H	6	9	9	11	11
L	8	6	9	9	13
MR	7.5	10	13	13	17
XD	84	95	103	112	116

Rear clevis

Ordering code
1370.Size.09F

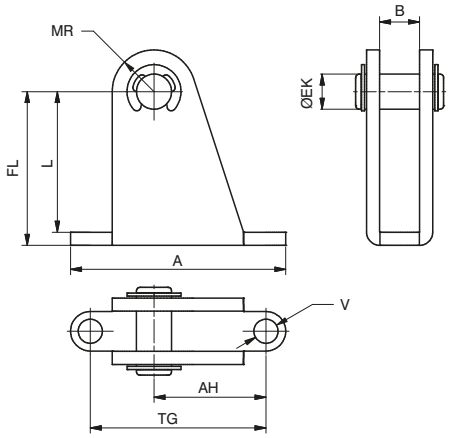

To be used in conjunction with 09/1 clevis. Similar to type 08 but includes a hinge pin. This type of mounting allows anchorage of the cylinder either parallel or right angle to plane; the cylinder rod can oscillate and self-align as necessary when under load. Manufactured from sheet metal with rust proof protective treatment.

Size	25	32	40	50	63
A	49	60	60	46	60
AH	25.5	33	29.5	24	32
B	9.1	10.6	10.6	20.1	25.1
ØEK	8	10	12	12	16
FL	35	42	51	55	68
L	32	38	47	50	63
MR	9.5	11	14	14	18
TG	40	50	50	30	40
ØV	5.5	6.6	6.6	9	11

Overall dimensions and technical information are provided solely for informative purposes and may be modified without notice

Fork

Ordering code
1320.32.13F (for ø25 and ø32) **1320.40.13F** (for ø40) **1320.50.13F** (for ø50) **1320.63.13F** (for ø63)

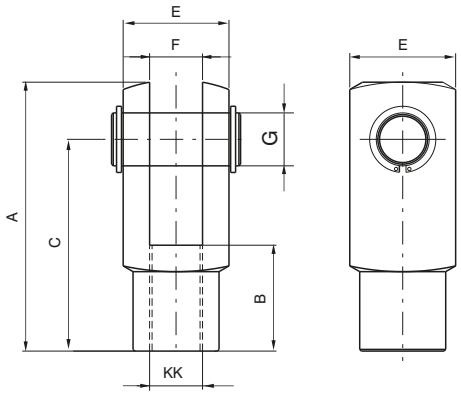

Fork with clips

Ordering code
1320.32.13/1F (for ø25 and ø32) **1320.40.13/1F** (for ø40) **1320.50.13/1F** (for ø50) **1320.63.13/1F** (for ø63)

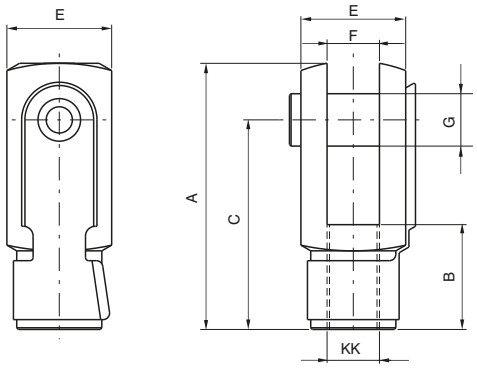

Nut

Ordering code
1320.32.18F (for ø25 and ø32) **1320.40.18F** (for ø40) **1320.50.18F** (for ø50) **1320.63.18F** (for ø63)

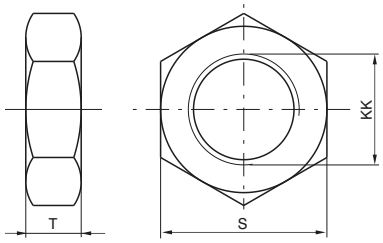

Fork:
Element that when screwed to the rod consents a regular functioning even when there are significant lateral forces as the connection point. Made of zinc-plated steel.
Nut:
Used to block the position of the fork.

Bore		25	32	40	50	63
A		52	52	62	83	83
B		20	20	24	32	32
C		40	40	48	64	64
E		20	20	24	32	32
F(B12)		10	10	12	16	16
G		10	10	12	16	16
S		17	17	19	24	24
T		6	6	7	8	8
KK		M10X1.25	M10X1.25	M12X1.25	M16X1.5	M16X1.5
Weight	fork	100	100	140	340	340
g	nut	15	15	20	20	20

Ball joint

Ordering code
1320.32.32F (for ø25 and ø32) **1320.40.32F** (for ø40) **1320.50.32F** (for ø50) **1320.63.32F** (for ø63)

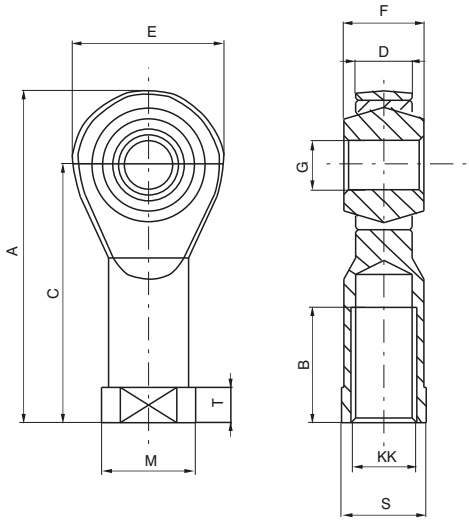

Bore	25	32	40	50	63
A	57	57	66	85	85
B	20	20	22	28	28
C	43	43	50	64	64
D (-0,1)	10.5	10.5	12	15	15
E	28	28	32	42	42
F	14	14	16	21	21
G (H 7)	10	10	12	16	16
KK	M10x1.25	M10x1.25	M12x1.25	M16x1.5	M16x1.5
M	19	19	22	27	27
S	17	17	19	22	22
T	6.5	6.5	6.5	8	8
Weight g	76	76	110	220	220

Self-aligning joint

Ordering code
1320.32.33F (for ø25 and ø32) **1320.40.33F** (for ø40) **1320.50.33F** (for ø50) **1320.63.33F** (for ø63)

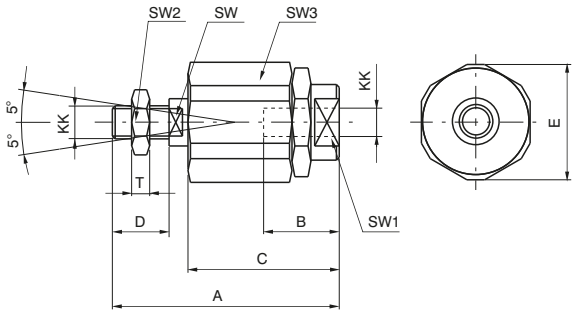

Bore	25	32	40	50	63
A	71	71	75	103	103
B	20	20	20	32	32
C	46	46	46	63	63
D	20	20	24	32	32
E	32	32	32	45	45
KK	M10x1,25	M10x1,25	M12x1,25	M16x1,5	M16x1,5
SW	12	12	12	20	20
SW1	19	19	19	27	27
SW2	17	17	19	24	24
SW3	30	30	30	41	41
T	6	6	7	8	8
Weight g	220	220	230	660	660

Overall dimensions and technical information are provided solely for informative purposes and may be modified without notice

Series 1400, Hydraulic speed control cylinders (Ø40 - Ø63)

General

The SKIP and STOP valves are pneumatically actuated 2 ways poppet valves. The SKIP valve (accelerating device) is normally open and is equipped with a supplementary regulator for maximum speed control. It must be activated to obtain speed regulation.
The STOP valve can be normally closed or normally open.

Construction characteristics

End caps	black anodised aluminium
Barrels	bright painted drawn steel
Rod	C43 chromed steel
Tie rods	plated zinc steel
Piston	aluminium
Waterproof seals	NBR rubber
Piston seal	FPM
Rod seal	PUR
Regulators group	brass
Skip and stop valves	black anodised aluminium
Circuit oil	hydraulic with viscosity 2.9° E at 50°C (viscosity index minimum 118)
Bore	40 mm and 63 mm diameter

Technical characteristics

Max connecting load	600 kg (Ø40) -1200 Kg (Ø63)
Min. and max. speed	60 - 10000 mm/min.
Working temperature	-5°C - +70°C
Minimum pressure for the actuation of skip and stop valves	4 bar

Standard strokes

50 - 100 - 150 - 200 - 250 - 300 - 350 - 400 - 450 - 500 mm
minimum stroke for type 1400.stroke.03.05 and 1400.stroke.03.06, 150 mm.

Important: For heavier load we have available the hydraulic speed control check cylinders of 63 mm diameter suitable to withstand loads up to 1200 kg. For more information please contact our technical department.

Maintenance

The speed control check is a closed system and there are no external factors that can adversely affect its function. Care however, has to be exercised not to allow the hydraulic fluid level to drop below the minimum indicated on the auxiliary tank. Should this occur, cavitation, or worse, an air pocket would result causing erratic control.
Additional fluid should be put in exclusively through a unidirectional valve by means of an appropriate syringe (such as our code number 1400.99.01). Excess fluid will be expelled through a vent into an appropriate container. It is necessary to completely disassemble the regulator and be sure to bleed the system to eliminate air pockets. We suggest that you create a vacuum before beginning to refill.
This can be done with a small unidirectional valve turned up and repeatedly loaded with a syringe.
The rod must be manually actuated successively releasing air through the valve using a small and pointed instrument.

Functional schematics

Outward stroke Control

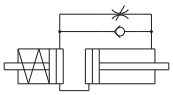
1400.Ø.stroke.01.2
1400.40.stroke.01.1

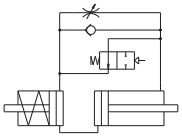
1400.Ø.stroke.01.04

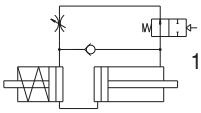
1400.Ø.stroke.01.05

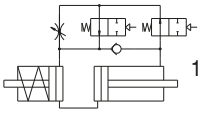
1400.Ø.stroke.01.06

Inward stroke Control

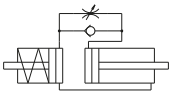
1400.Ø.stroke.02.2

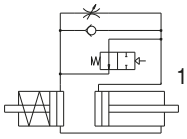
1400.Ø.stroke.02.04

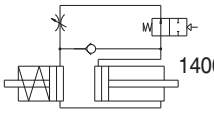
1400.Ø.stroke.02.05

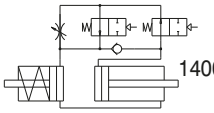
1400.Ø.stroke.02.06

Inward & Outward stroke Control

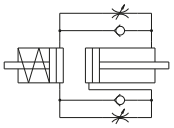
1400.Ø.stroke.03.2

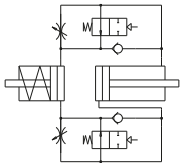
1400.Ø.stroke.03.04

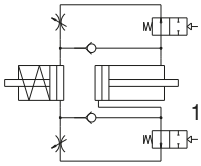
1400.Ø.stroke.03.05

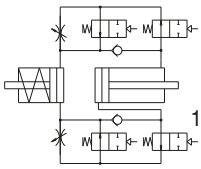
1400.Ø.stroke.03.06

Overall dimensions and technical information are provided solely for informative purposes and may be modified without notice

Regulation on the outward stroke - Tank in line

Ordering code
1400.40.stroke.01.1

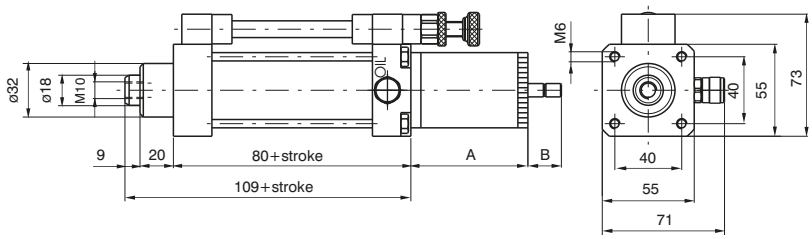

Strokes	A	B max.
< 75	78	30
75...<150	102	45
150...<250	127	60
250...<350	187	90
350...<500	202	120

Weight g 1450 + g 300 every 50 mm. stroke

Regulation on the outward stroke – Lateral tank

Ordering code
1400.40.stroke.01.2

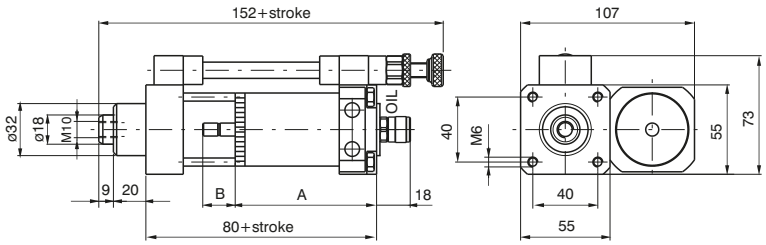

Strokes	A	B max.
< 75	93	30
75...<150	118	45
150...<250	143	60
250...<350	183	90
350...<500	218	120

Weight g 1530 + g 300 every 50 mm. di stroke

Regulation on the inward stroke

Ordering code
1400.40.stroke.02.2

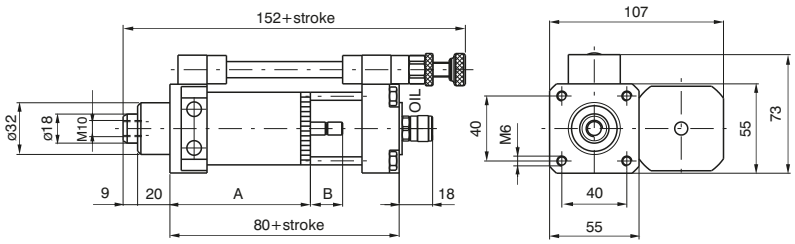

Strokes	A	B max.
< 75	93	30
75...<150	118	45
150...<250	143	60
250...<350	183	90
350...<500	218	120

Weight g 1530 + g 300 every 50 mm. di stroke

Regulation in both directions

Ordering code
1400.40.stroke.03.2

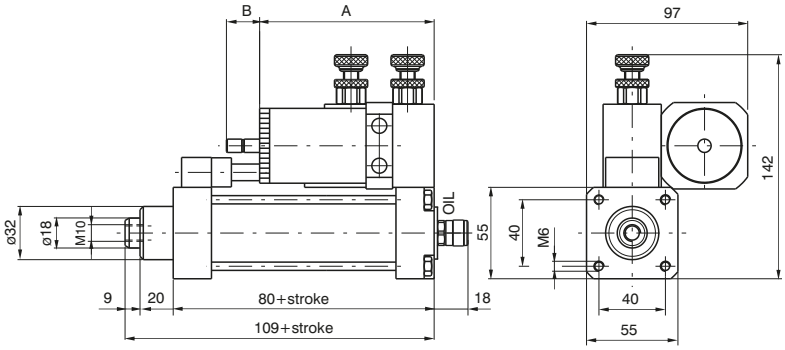

Weight g 1870 + g 300 every 50 mm. stroke

Attention: Minimum stroke=150mm when fitted in tandem (parallel or in-line) with 1319-1320-1321 cylinders series Ø80mm or Ø100mm.

Strokes	A	B max.
< 75	110	30
75...<150	135	45
150...<250	160	60
250...<350	200	90
350...<500	235	120

Regulation on the outward stroke with skip (Acceleration valve)

Ordering code
1400.40.stroke.01.04

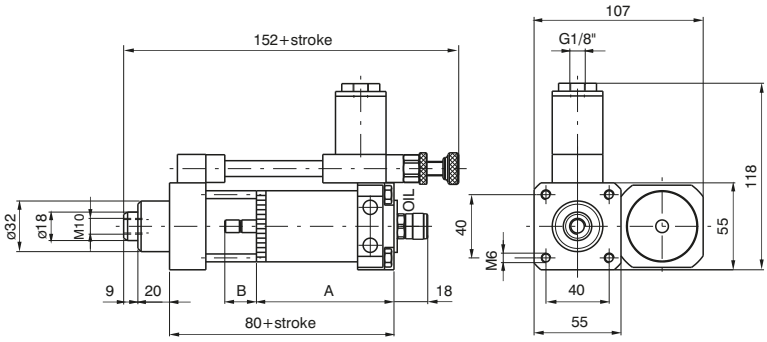

Weight g 1670 + g 300 every 50 mm. stroke

Strokes	A	B max.
< 75	93	30
75...<150	118	45
150...<250	143	60
250...<350	183	90
350...<500	218	120

Regulation on the outward stroke with stop (Stop valve)

Ordering code
1400.40.stroke.01.05

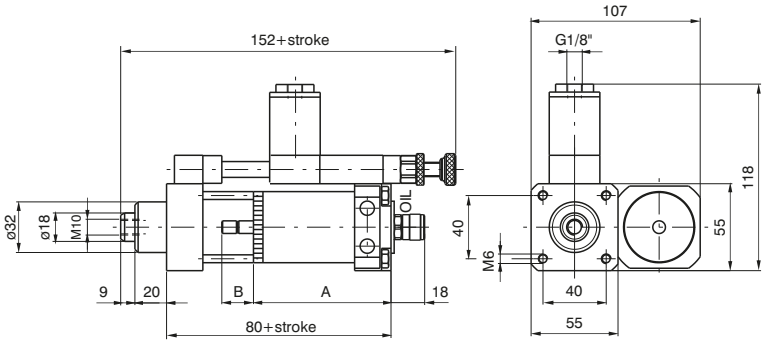

Weight g 1710 + g 300 every 50 mm. stroke

Strokes	A	B max.
< 75	93	30
75...<150	118	45
150...<250	143	60
250...<350	183	90
350...<500	218	120

Overall dimensions and technical information are provided solely for informative purposes and may be modified without notice

Regulation on the outward stroke with skip and stop (Acceleration and stop valves)

Ordering code
1400.40.stroke.01.06

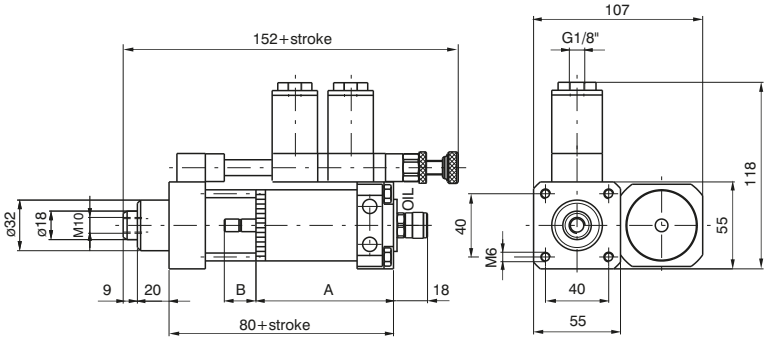

Strokes	A	B max.
< 75	93	30
75...<150	118	45
150...<250	143	60
250...<350	183	90
350...<500	218	120

Weight g 1830 + g 300 every 50 mm. stroke

Regulation on the inward stroke with skip (Acceleration valve)

Ordering code
1400.40.stroke.02.04

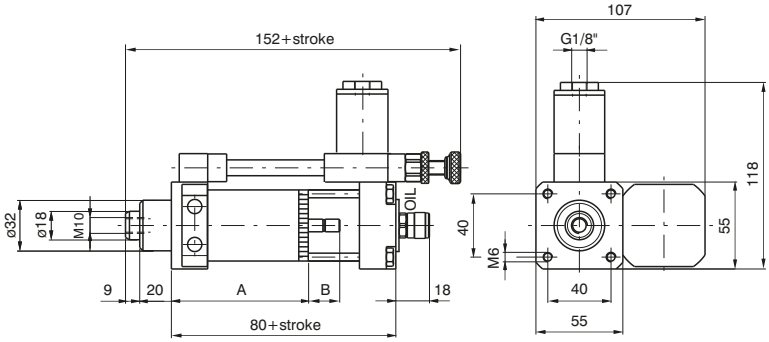

Strokes	A	B max.
< 75	93	30
75...<150	118	45
150...<250	143	60
250...<350	183	90
350...<500	218	120

Weight g 1670 + g 300 every 50 mm. stroke

Regulation on the inward stroke with stop (Stop valve)

Ordering code
1400.40.stroke.02.05

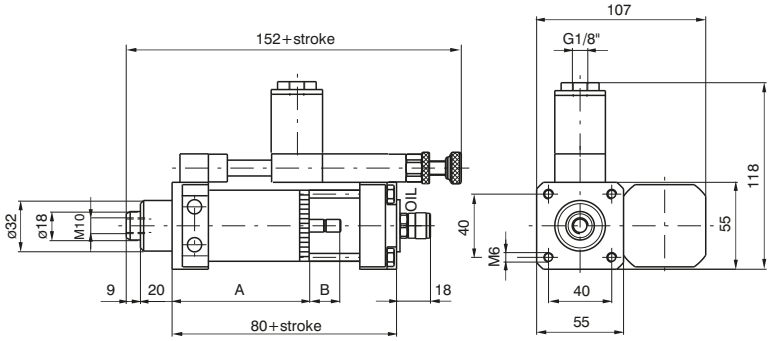

Strokes	A	B max.
< 75	93	30
75...<150	118	45
150...<250	143	60
250...<350	183	90
350...<500	218	120

Weight g 1710 + g 300 every 50 mm. stroke

Overall dimensions and technical information are provided solely for informative purposes and may be modified without notice

Regulation on the inward stroke with skip and stop (Acceleration and stop valves)

Ordering code
1400.40.stroke.02.06

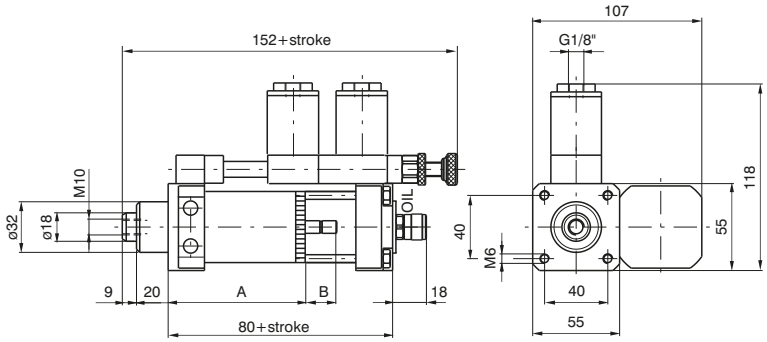

Strokes	A	B max.
< 75	93	30
75...<150	118	45
150...<250	143	60
250...<350	183	90
350...<500	218	120

Weight g 1830 + g 300 every 50 mm. stroke

Regulation in both directions with skip (Acceleration valves in both directions)

Ordering code
1400.40.stroke.03.04

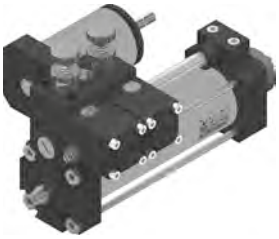

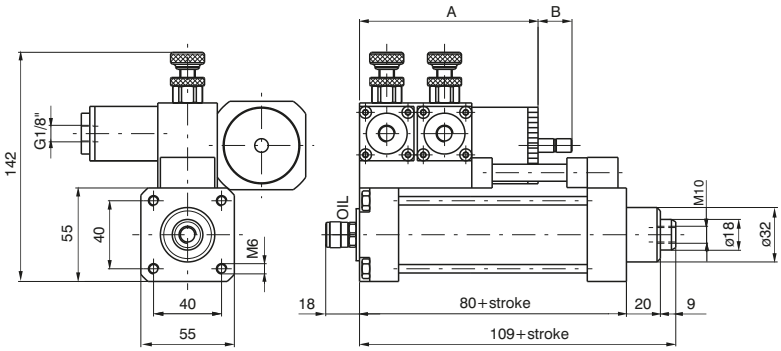

Attention: Minimum stroke=150mm when fitted in tandem (parallel or in-line) with 1319-1320-1321 cylinders series Ø80mm or Ø100mm.

Strokes	A	B max.
< 75	110	30
75...<150	135	45
150...<250	160	60
250...<350	200	90
350...<500	235	120

Weight g 2110 + g 300 every 50 mm. stroke

Regulation in both directions with stop (Stop valves in both directions)

Ordering code
1400.40.stroke.03.05

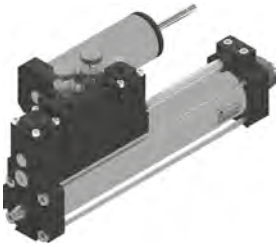

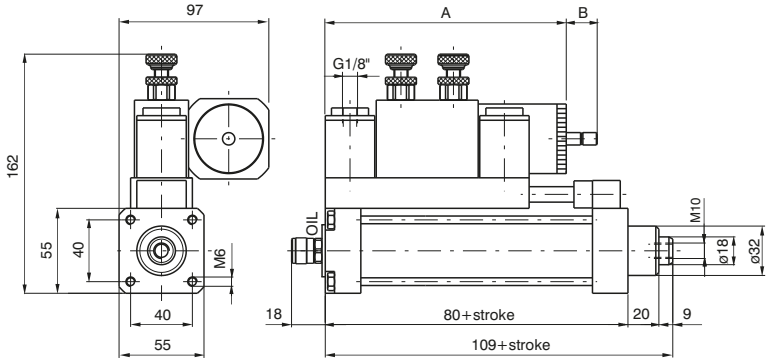

Strokes	A	B max.
150...<250	197	60
250...<350	237	90
350...<500	272	120

Min. stroke 150 mm
Weight g 2390 + g 300 every 50 mm. stroke

Overall dimensions and technical information are provided solely for informative purposes and may be modified without notice

Regulation in both directions with skip and stop (Acceleration and stop valves in both

Ordering code
1400.40.stroke.03.06

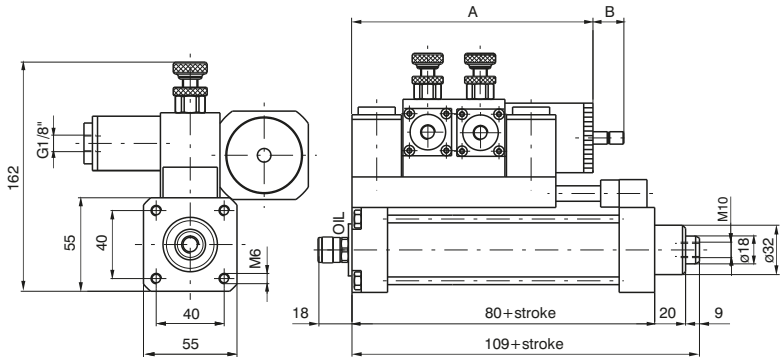

Strokes	A	B max.
150 ... < 250	197	60
250 ... < 350	237	90
350 ... < 500	272	120

Min. stroke 150 mm
Weight g 2630 + g 300 every 50 mm. stroke

Regulation on the outward stroke – Lateral tank

Ordering code
1400.63.stroke.01.2

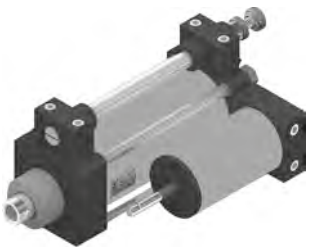

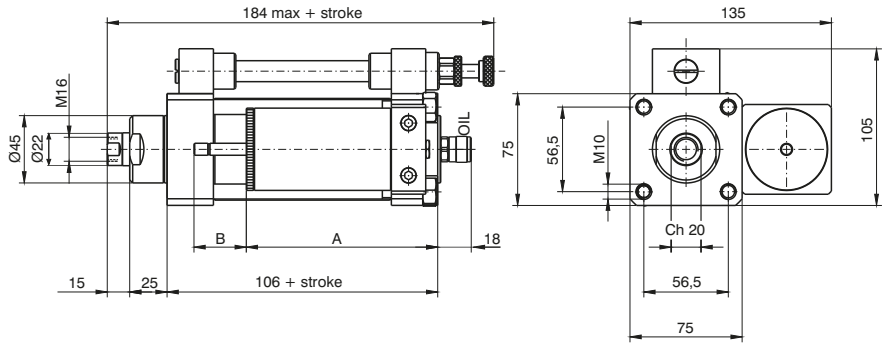

Strokes	A	B max
≥75 ... <150	128	50
≥150 ... <250	188	80
≥250 ... <350	238	100
≥350 ... <450	298	130
≥450 ... ≤600	358	160

Min. stroke 75 mm
Weight g 2950 + g 850 every 50 mm. stroke

Regulation on the inward stroke

Ordering code
1400.63.stroke.02.2

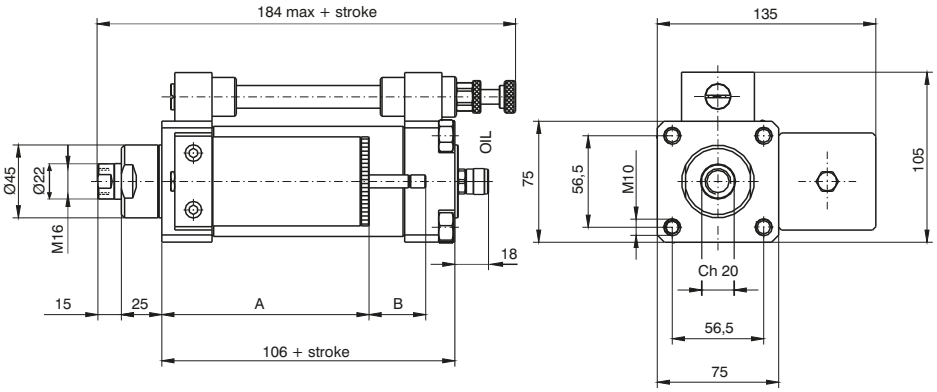

Strokes	A	B max
≥75 ... <150	128	50
≥150 ... <250	188	80
≥250 ... <350	238	100
≥350 ... <450	298	130
≥450 ... ≤600	358	160

Min. stroke 75 mm
Weight g 2950 + g 850 every 50 mm. stroke

Regulation in both directions

Ordering code
1400.63.stroke.03.2

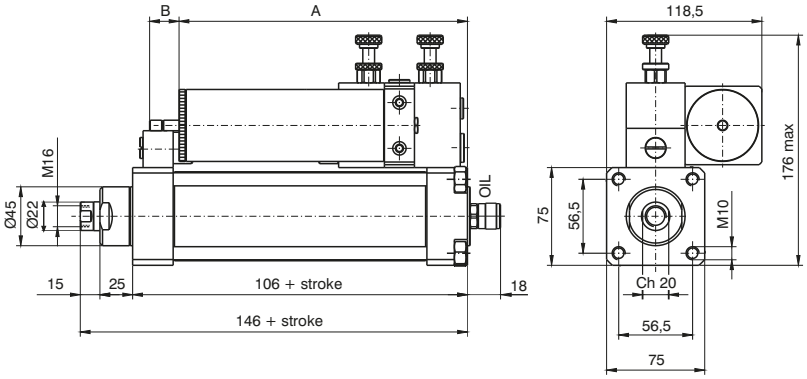

Strokes	A	B max
≥100 ... <150	160	50
≥150 ... <250	220	80
≥250 ... <350	270	100
≥350 ... <450	330	130
≥450 ... ≤600	390	160

Min. stroke 100 mm
Weight g 3600 + g 850 every 50 mm. stroke

Overall dimensions and technical information are provided solely for informative purposes and may be modified without notice

Regulation on the outward stroke with skip (Acceleration valve)

Ordering code
1400.63.stroke.01.04

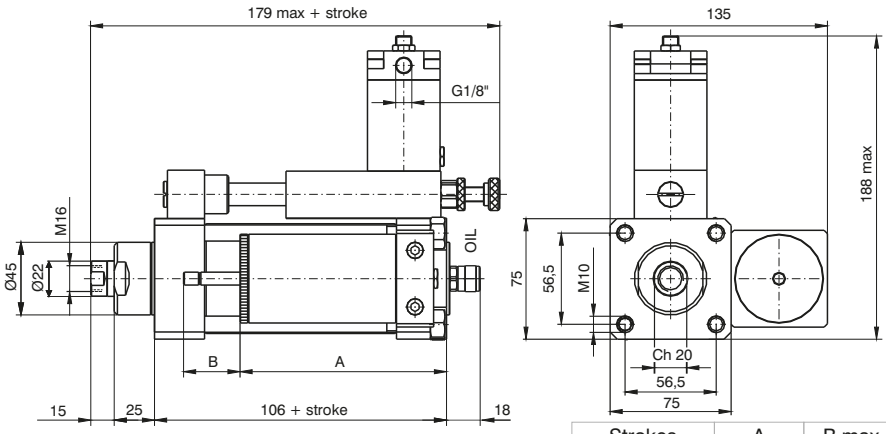

Strokes	A	B max
≥75 ... <150	128	50
≥150 ... <250	188	80
≥250 ... <350	238	100
≥350 ... <450	298	130
≥450 ... ≤600	358	160

Min. stroke 75 mm
Weight g 3450 + g 850 every 50 mm. stroke

Regulation on the outward stroke with stop (Stop valve)

Ordering code
1400.63.stroke.01.05

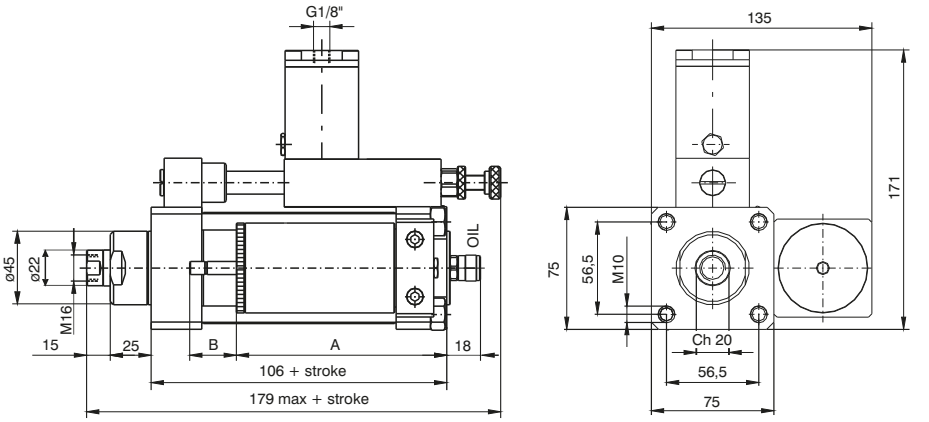

Strokes	A	B max
≥75 ... <150	128	50
≥150 ... <250	188	80
≥250 ... <350	238	100
≥350 ... <450	298	130
≥450 ... ≤600	358	160

Min. stroke 75 mm
Weight g 3450 + g 850 every 50 mm. stroke

Regulation on the outward stroke with skip and stop (Acceleration and stop valves)

Ordering code
1400.63.stroke.01.06

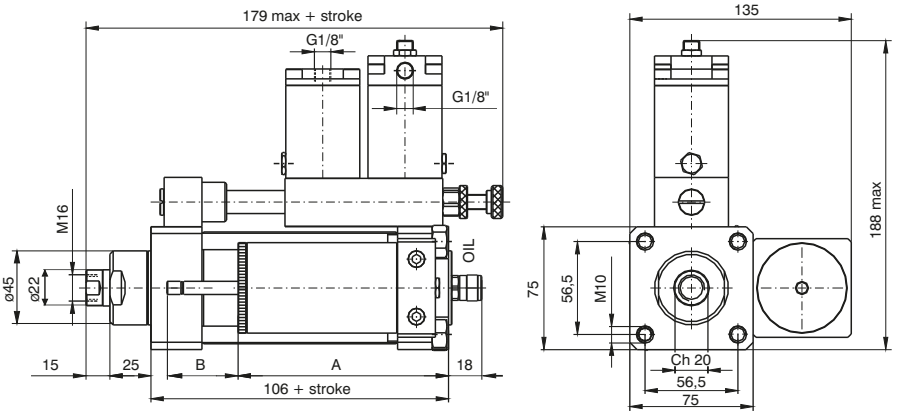

Strokes	A	B max
≥75 ... <150	128	50
≥150 ... <250	188	80
≥250 ... <350	238	100
≥350 ... <450	298	130
≥450 ... ≤600	358	160

Min. stroke 75 mm
Weight g 3700 + g 850 every 50 mm. stroke

Regulation on the inward stroke with skip (Acceleration valve)

Ordering code
1400.63.stroke.02.04

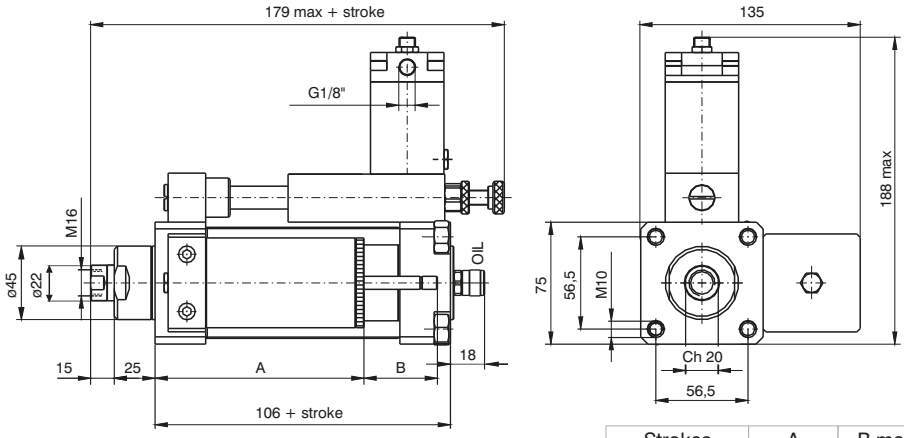

Strokes	A	B max
≥75 ... <150	128	50
≥150 ... <250	188	80
≥250 ... <350	238	100
≥350 ... <450	298	130
≥450 ... ≤600	358	160

Min. stroke 75 mm
Weight g 3450 + g 850 every 50 mm. stroke

Regulation on the inward stroke with stop (Stop valves)

Ordering code
1400.63.stroke.02.05

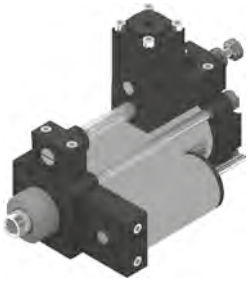

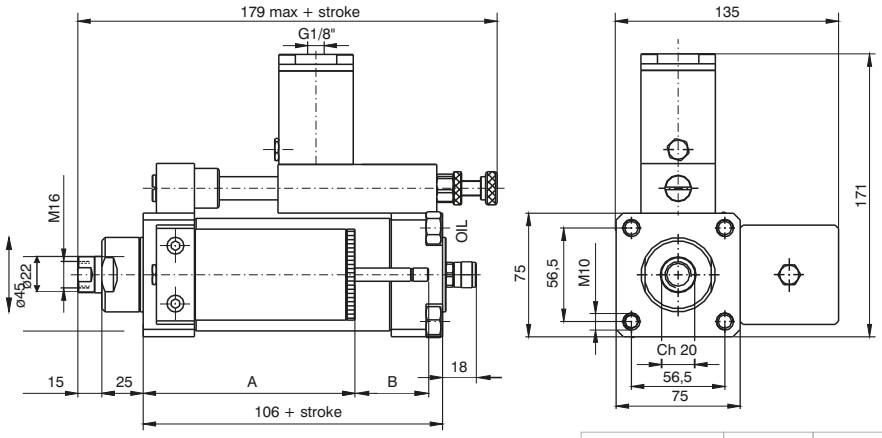

Strokes	A	B max
≥75 ... <150	128	50
≥150 ... <250	188	80
≥250 ... <350	238	100
≥350 ... <450	298	130
≥450 ... ≤600	358	160

Min. stroke 75 mm
Weight g 3450 + g 850 every 50 mm. stroke

Regulation on the inward stroke with skip and stop (Acceleration and stop valve)

Ordering code
1400.63.stroke.02.06

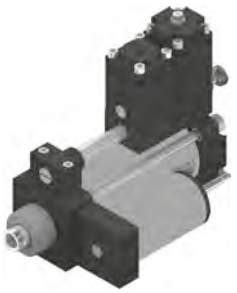

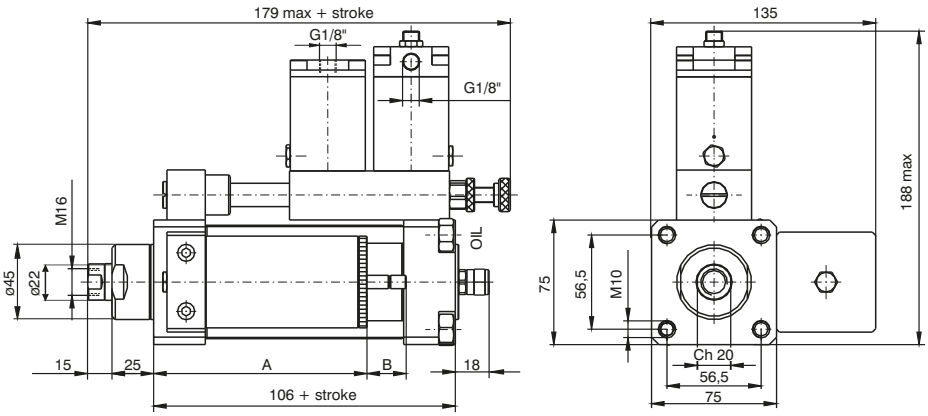

Strokes	A	B max
≥75 ... <150	128	50
≥150 ... <250	188	80
≥250 ... <350	238	100
≥350 ... <450	298	130
≥450 ... ≤600	358	160

Min. stroke 75 mm
Weight g 3700 + g 850 every 50 mm. stroke

Overall dimensions and technical information are provided solely for informative purposes and may be modified without notice

Regulation in both direction with skip (Accelerations valve in two directions)

Ordering code
1400.63.stroke.03.04

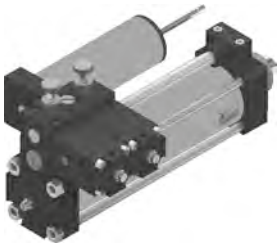

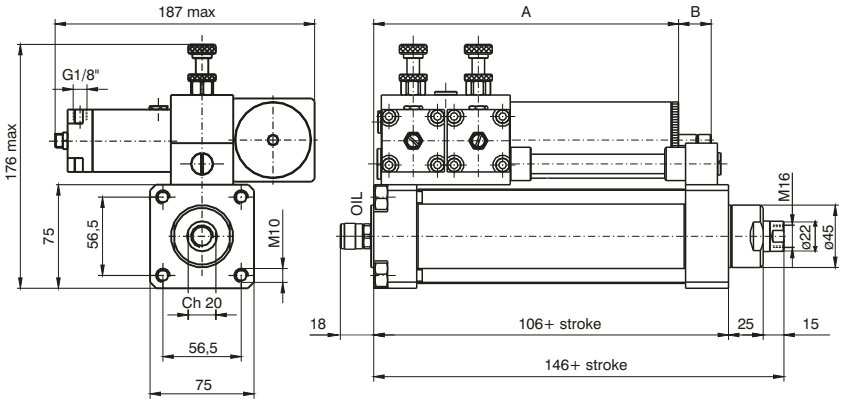

Strokes	A	B max
≥100 ... <150	160	50
≥150 ... <250	220	80
≥250 ... <350	270	100
≥350 ... <450	330	130
≥450 ... ≤600	390	160

Min. stroke 100 mm
Weight g 4100 + g 850 every 50 mm. stroke

Regulation in both direction with stop (Stop valves in two directions)

Ordering code
1400.63.stroke.03.05

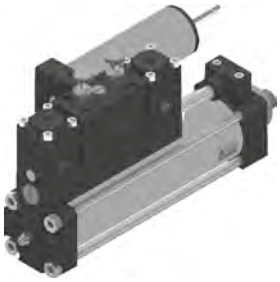

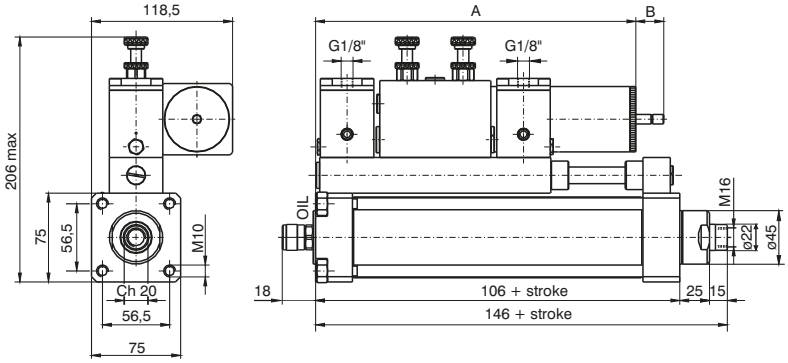

Strokes	A	B max
≥200 ... <250	269	80
≥250 ... <350	319	100
≥350 ... <450	379	130
≥450 ... ≤600	439	160

Min. stroke 200 mm
Weight g 4850 + g 850 every 50 mm. stroke

Regulation in both direction with skip and stop (Acceleration and stop valves in two directions)

Ordering code
1400.63.stroke.03.06

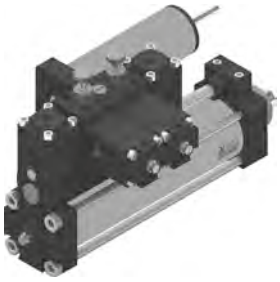

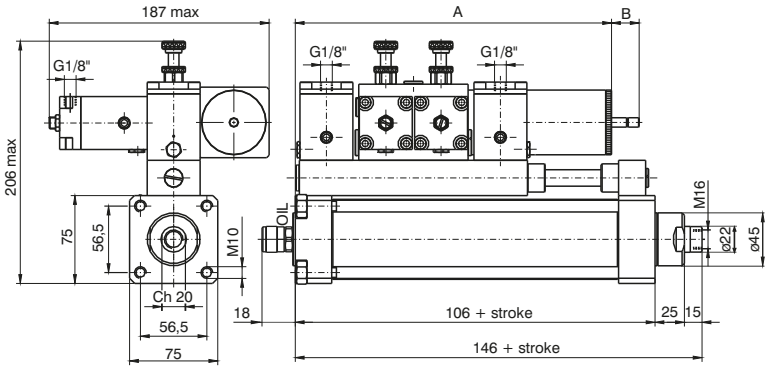

Strokes	A	B max
≥200 ... <250	269	80
≥250 ... <350	319	100
≥350 ... <450	379	130
≥450 ... ≤600	439	160

Min. stroke 200 mm
Weight g 5400 + g 850 every 50 mm. stroke

Overall dimensions and technical information are provided solely for informative purposes and may be modified without notice

Dimensional releases and power supply positions with N.C. stop valves

Ordering code
1400.Ø.stroke.01.07 regulation on the outward stroke + stop N.C. **1400.Ø.stroke.01.08** regulation on the outward stroke + skip + stop N.C. **1400.Ø.stroke.02.07** regulation on the inward stroke + stop N.C. **1400.Ø.stroke.02.08** regulation on the inward stroke +skip and stop N.C. **1400.Ø.stroke.03.07** regulation in both directions + stop N.C. **1400.Ø.stroke.03.08** regulation in both directions + skip + stop N.C.

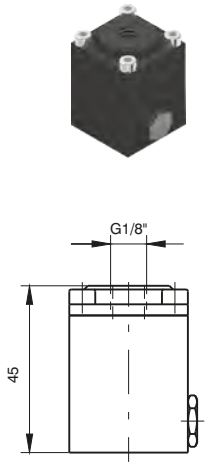

STOP N.A.
Ø40

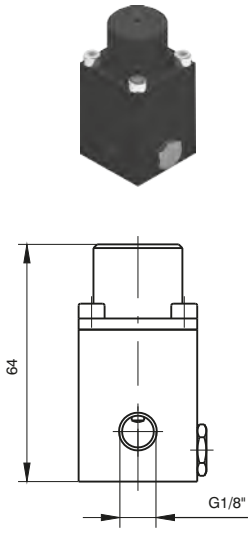

STOP N.C.
Ø40

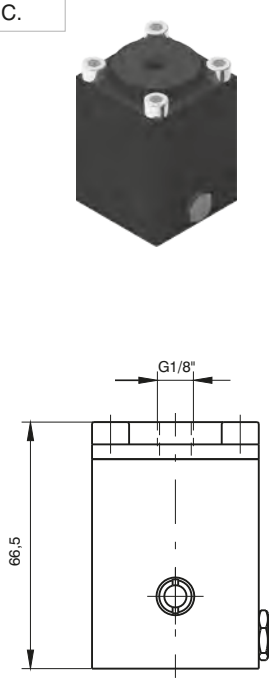

STOP N.A.
Ø63

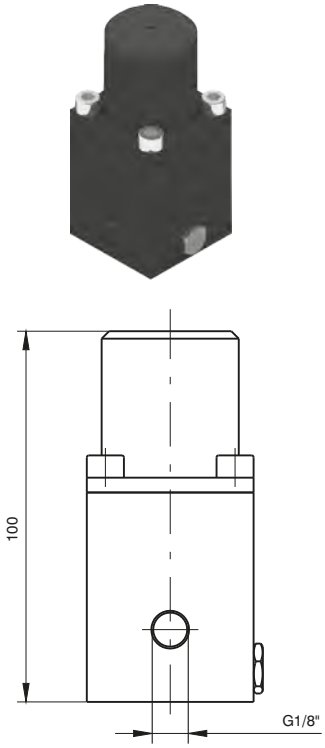

STOP N.C.
Ø63

Hydraulic fluid refill syringe

Ordering code
1400.99.02

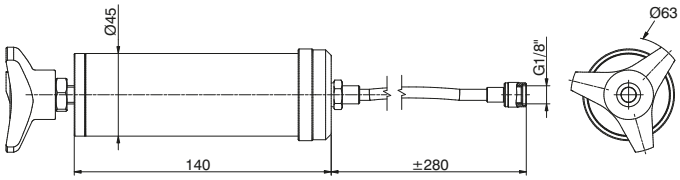

Weight g 420

Oil for hydraulic and pneumatic circuits

Ordering code
PNEUMOIL 01 (1 litre bottles)

This oil is suitable to lubricate pneumatic circuits and also to refill hydraulic speed control tanks.
It is completely compatible with our seals.

Overall dimensions and technical information are provided solely for informative purposes and may be modified without notice

Series 1500 - Short stroke compact cylinders

General

Profiled tube has three "T" slots on the three sides hosting sensors 1500._, RS._, HS._.
without adaptors and with adaptor code 1380.01F codes 1580._, MRS._, MHS._.

A complete range of clamps makes them easy to install under any conditions.

It is interesting to note that as these cylinders (from Ø 32 to Ø 100) have anchoring holes with the same lead and thread as those of series 1320 ISO 6431, they accept all mountings except for the intermediate trunnion.

Construction characteristics

Body	anodised aluminium
Rod	C43 chromed steel (stainless steel for magnetic cylinder Ø20 and Ø25)
Piston	aluminium
Rod bushing	anodised aluminium
End cap	anodised aluminium
Seals	Standard: NBR oil resistant rubber, PUR piston rod seals (HNBR or FPM seals available upon request)

Operational characteristics

Fluid	Filtered air. No lubrication needed, if applied it shall be continuous.
Max. pressure	10 bar
Working temperature	-5°C - +70°C with standard seals magnetic or non magnetic piston -5°C - +80°C with FPM seals magnetic piston -5°C - +80°C with HNBR seals magnetic piston -5°C - +120°C with HNBR seals non magnetic piston -5°C - +150°C with FPM seals non magnetic piston

Please follow the suggestions below to ensure a long life for these cylinders:
- use clean and lubricated air
- correct alignment during assembly with regard to the applied load so as to avoid radial components or bending the rod.
- avoid high speeds together with long strokes and heavy loads: this would produce kinetic energy which the cylinder cannot absorb, especially if used as a limit stop (in this case use mechanical stop device)
- evaluate the environmental characteristics of cylinder used (high temperature, hard atmosphere, dust, humidity etc.)

Please note: air must be dried for applications with lower temperature.
Use hydraulic oils H class (ISO VG32) for correct continued lubrication.
Our Technical Department will be glad to help.

Standard strokes

Double acting version
Series 1501, 1504, 1511, 1514, 1515, 1516, 1517 and 1518
for all bores from 5 to 50 mm every 5 mm.
On request are available strokes as follow:
Ø 20 and Ø25 up to stroke 250 mm
Ø 32 e Ø 40 up to stroke 300 mm
Ø 50 e Ø 63 up to stroke 350 mm
Ø 80 e Ø 100 up to stroke 400 mm

Single acting version
Series 1502, 1503, 1512 and 1513:
For all bores from 5 to 10 mm.
On request are available strokes up to 50 mm

Type with non-rotating device:
Ø 20 and Ø 25 from 5 to 40 mm every 5 mm.
Ø 32 and Ø 40 from 5 to 50 mm every 5 mm.
Ø 50 and Ø 63 from 5 to 60 mm every 5 mm.
Ø 80 and Ø 100 from 5 to 80 mm every 5 mm.

Double acting version

Ordering code
1501.Ø.stroke standard seals **1501.Ø.stroke.V** FPM seals **1501.Ø.stroke.T** HNBR seals

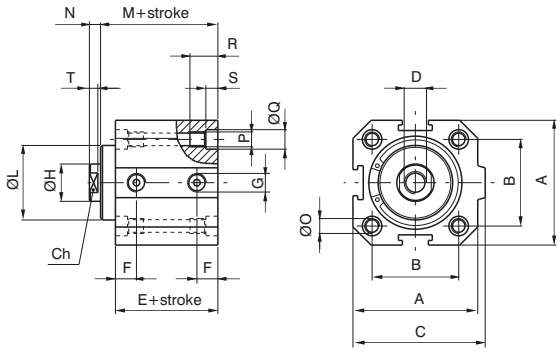

Double acting version with magnetic piston

Ordering code
1511.Ø.stroke standard seals **1511.Ø.stroke.V** FPM seals **1511.Ø.stroke.T** HNBR seals

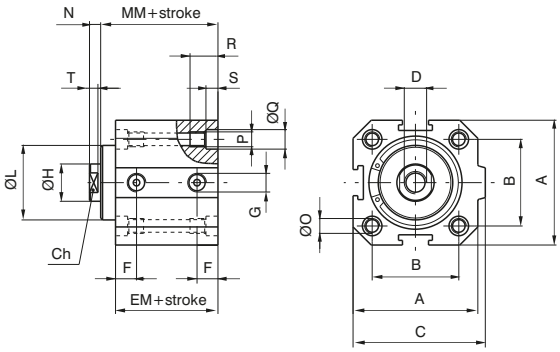

Bore	20	25	32	40	50	63	80	100
A	35	41	48	57	67	80	100	120
B	26	28	32,5	38	46,5	56,5	72	89
C	39,5	44,5	52	61	71	84	106	126
D	M4x8	M5x10	M6x12	M10x15	M12x18	M12x18	M16x20	M16x20
E	29	30,5	32	33,5	35	38	44	47
EM	34	35,5	37	38,5	40	43	49	52
F	9	9,15	9,75	10,5	11	11,25	13,75	15,25
G	G 1/8"	G 1/8"	G 1/8"	G 1/8"	G 1/8"	G 1/8"	G 3/8"	G 3/8"
Ø H	8	10	12	16	20	20	25	25
Ø L $\pm 0{,}05$ $\left(^{0}_{-0{,}1 \text{ per Ø80 e Ø 100}}\right)$	17	20,5	26	31	39	40	55	55
M	32	33	35,5	39,5	43	46	51,5	54,5
MM	37	38	40,5	44,5	48	51	56,5	59,5
N	4	4	4	5	6	6	8	8
Ø O	4,3	5,3	5,3	5,3	7	7	9	9
P	M5	M6	M6	M6	M8	M8	M10	M10
Ø Q	7,5	8,5	8,5	8,5	10,5	10,5	13,5	13,5
R	15	18	18	18	22	22	30	30
S	4,5	5,5	5,5	5,5	6,5	6,5	8,5	8,5
T	3	3	3	4	4,5	4,5	5,5	5,5
Ch	6	8	10	13	17	17	22	22

Non magnetic

Weight	stroke 0	75	110	170	260	400	600	800	1500
g	every 10 mm.	20	30	40	60	80	100	120	145

Magnetic

Weight	stroke 0	90	130	200	310	460	700	910	1620
g	every 10 mm.	20	30	40	60	80	100	120	145

Overall dimensions and technical information are provided solely for informative purposes and may be modified without notice

Single acting version with front spring

Ordering code
1502.Ø.stroke standard seals **1502.Ø.stroke.V** FPM seals **1502.Ø.stroke.T** HNBR seals

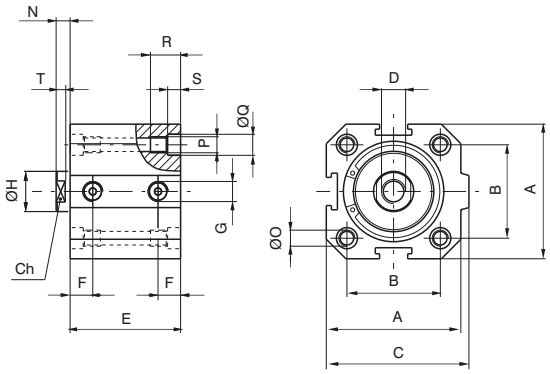

Single acting version front spring with magnetic piston

Ordering code
1512.Ø.stroke standard seals **1512.Ø.stroke.V** FPM seals **1512.Ø.stroke.T** HNBR seals

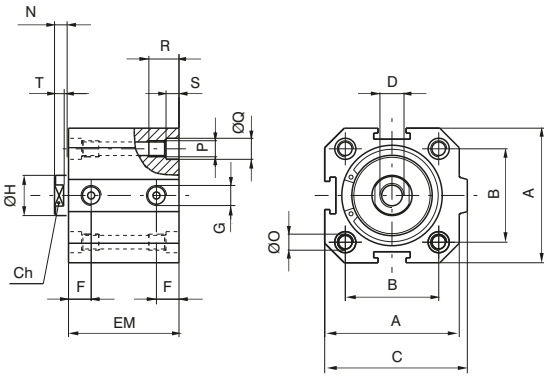

Bore		20	25	32	40	50	63	80	100
A		35	41	48	57	67	80	100	120
B		26	28	32,5	38	46,5	56,5	72	89
C		39,5	44,5	52	61	71	84	106	126
D		M4X8	M5X10	M6X12	M10X15	M12X18	M12X18	M16X20	M16X20
E	stroke 5	29	30,5	32	33,5	35	38	44	47
	stroke 10	34	35,5	37	38,5	40	43	49	52
EM	stroke 5	34	35,5	37	38,5	40	43	49	52
	stroke 10	39	40,5	42	43,5	45	48	54	57
F		9	9,15	9,75	10,5	11	11,25	13,75	15,25
G		G 1/8"	G 1/8"	G 1/8"	G 1/8"	G 1/8"	G 1/8"	G 3/8"	G 3/8"
Ø H		8	10	12	16	20	20	25	25
N		4	4	4	5	6	6	8	8
Ø O		4,3	5,3	5,3	5,3	7	7	9	9
P		M5	M6	M6	M6	M8	M8	M10	M10
Ø Q		7,5	8,5	8,5	8,5	10,5	10,5	13,5	13,5
R		15	18	18	18	22	22	30	30
S		4,5	5,5	5,5	5,5	6,5	6,5	8,5	8,5
T		3	3	3	4	4,5	4,5	5,5	5,5
Ch		6	8	10	13	17	17	22	22

Non magnetic

Weight	stroke 5	70	105	160	250	370	550	750	1440
g	stroke 10	80	120	180	280	410	600	810	1500

Magnetic

Weight	stroke 5	85	125	190	300	430	650	860	1560
g	stroke 10	95	140	210	330	470	700	920	1620

Overall dimensions and technical information are provided solely for informative purposes and may be modified without notice

Single acting version with rear spring

Ordering code
1503.Ø.stroke standard seals **1503.Ø.stroke.V** FPM seals **1503.Ø.stroke.T** HNBR seals

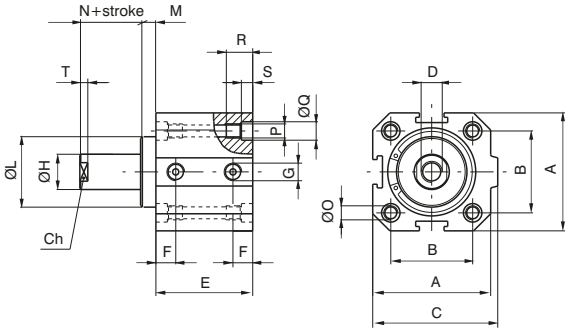

Single acting version rear spring with magnetic piston

Ordering code
1513.Ø.stroke standard seals **1513.Ø.stroke.V** FPM seals **1513.Ø.stroke.T** HNBR seals

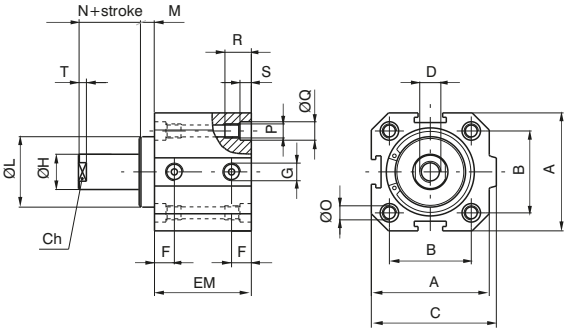

Bore		20	25	32	40	50	63	80	100
A		35	41	48	57	67	80	100	120
B		26	28	32,5	38	46,5	56,5	72	89
C		39,5	44,5	52	61	71	84	106	126
D		M4X8	M5X10	M6X12	M10X15	M12X18	M12X18	M16X20	M16X20
E	stroke 5	29	30,5	32	33,5	35	38	44	47
	stroke 10	34	35,5	37	38,5	40	43	49	52
EM	stroke 5	34	35,5	37	38,5	40	43	49	52
	stroke 10	39	40,5	42	43,5	45	48	54	57
F		9	9,15	9,75	10,5	11	11,25	13,75	15,25
G		G 1/8"	G 1/8"	G 1/8"	G 1/8"	G 1/8"	G 1/8"	G 3/8"	G 3/8"
Ø H		8	10	12	16	20	20	25	25
Ø L $\pm 0{,}05$ ($^{0}_{-0{,}1}$ per Ø80 e Ø 100)		17	20,5	26	31	39	40	55	55
M		3	2,5	3,5	6	8	8	7,5	7,5
N		4	4	4	5	6	6	8	8
Ø O		4,3	5,3	5,3	5,3	7	7	9	9
P		M5	M6	M6	M6	M8	M8	M10	M10
Ø Q		7,5	8,5	8,5	8,5	10,5	10,5	13,5	13,5
R		15	18	18	18	22	22	30	30
S		4,5	5,5	5,5	5,5	6,5	6,5	8,5	8,5
T		3	3	3	4	4,5	4,5	5,5	5,5
Ch		6	8	10	13	17	17	22	22

Non magnetic

Weight	stroke 5	70	105	160	250	370	550	750	1440
g	stroke 10	80	120	180	280	410	600	810	1500

Magnetic

Weight	stroke 5	85	125	190	300	430	650	860	1560
g	stroke 10	95	140	210	330	470	700	920	1620

Overall dimensions and technical information are provided solely for informative purposes and may be modified without notice

Double acting through rod cylinder version

Ordering code
1504.Ø.stroke standard seals **1504.Ø.stroke.V** FPM seals **1504.Ø.stroke.T** HNBR seals

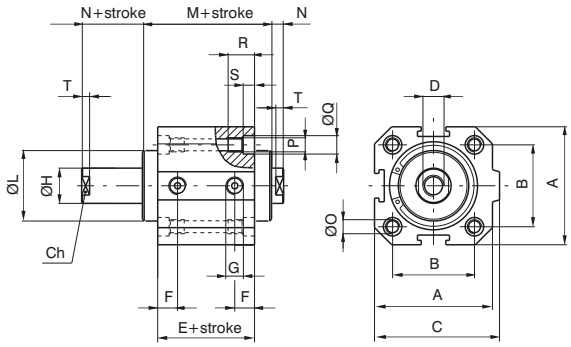

Double acting through rod cylinder version with magnetic piston

Ordering code
1514.Ø.stroke standard seals **1514.Ø.stroke.V** FPM seals **1514.Ø.stroke.T** HNBR seals

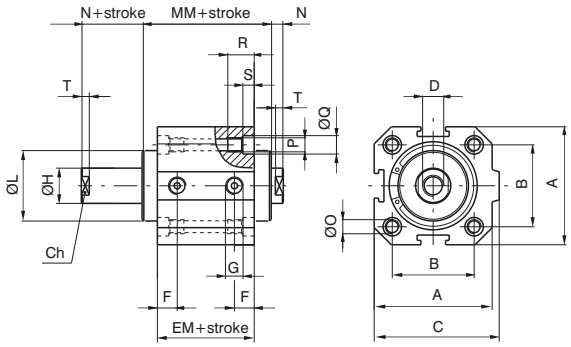

Bore	20	25	32	40	50	63	80	100
A	35	41	48	57	67	80	100	120
B	26	28	32,5	38	46,5	56,5	72	89
C	39,5	44,5	52	61	71	84	106	126
D	M4X8	M5X10	M6X12	M10X15	M12X18	M12X18	M16X20	M16X20
E	29	30,5	32	33,5	35	38	44	47
EM	34	35,5	37	38,5	40	43	49	52
F	9	9,15	9,75	10,5	11	11,25	13,75	15,25
G	G 1/8"	G 1/8"	G 1/8"	G 1/8"	G 1/8"	G 1/8"	G 3/8"	G 3/8"
Ø H	8	10	12	16	20	20	25	25
Ø L $^{\pm 0,05}$ ($^{0}_{-0,1}$ per Ø80 e Ø 100)	17	20,5	26	31	39	40	55	55
M	35	35,5	39	45,5	51	54	59	62
MM	40	40,5	44	50,5	56	59	64	67
N	4	4	4	5	6	6	8	8
Ø O	4,3	5,3	5,3	5,3	7	7	9	9
P	M5	M6	M6	M6	M8	M8	M10	M10
Ø Q	7,5	8,5	8,5	8,5	10,5	10,5	13,5	13,5
R	15	18	18	18	22	22	30	30
S	4,5	5,5	5,5	5,5	6,5	6,5	8,5	8,5
T	3	3	3	4	4,5	4,5	5,5	5,5
Ch	6	8	10	13	17	17	22	22

Non magnetic

Weight	stroke 0	90	130	200	320	460	670	1100	1680
g	every 10 mm.	20	35	50	70	90	110	155	185

Magnetic

Weight	stroke 0	105	160	240	380	530	740	1210	1820
g	every 10 mm.	20	35	50	70	90	110	155	185

Overall dimensions and technical information are provided solely for informative purposes and may be modified without notice

Tandem with opposed rods

Ordering code
1515.Ø.stroke.stroke 1 standard seals
1515.Ø.stroke.stroke 1.V FPM seals
1515.Ø.stroke.stroke 1.T HNBR seals
1515.Ø.stroke.stroke 1.M standard seals, magnetic piston
1515.Ø.stroke.stroke 1.MV FPM seals, magnetic piston
1515.Ø.stroke.stroke 1.MT HNBR seals, magnetic piston

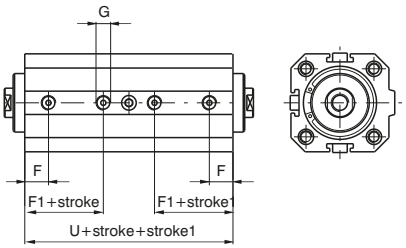

Tandem push with common rods

Ordering code
1516.Ø.stroke standard seals
1516.Ø.stroke.V FPM seals
1516.Ø.stroke.T HNBR seals
1516.Ø.stroke.M standard seals, magnetic piston
1516.Ø.stroke.MV FPM seals, magnetic piston
1516.Ø.stroke.MT HNBR seals, magnetic piston

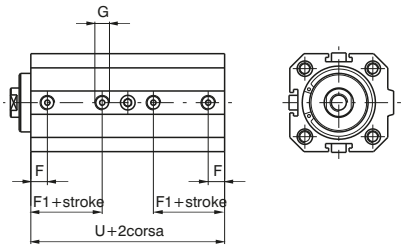

Tandem push with independent rods

Ordering code
1517.Ø.stroke.stroke 1 standard seals
1517.Ø.stroke.stroke 1.V FPM seals
1517.Ø.stroke.stroke 1.T HNBR seals
1517.Ø.stroke.stroke 1.M standard seals, magnetic piston
1517.Ø.stroke.stroke 1.MV FPM seals, magnetic piston
1517.Ø.stroke.stroke 1.MT HNBR seals, magnetic piston

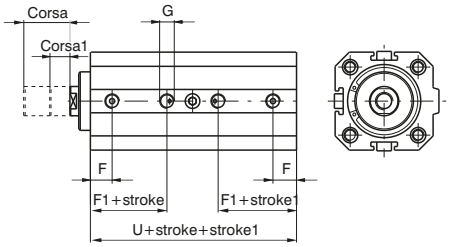

Opposed tandem with common rods

Ordering code
1518.Ø.stroke.stroke 1 standard seals
1518.Ø.stroke.stroke 1.V FPM seals
1518.Ø.stroke.stroke 1.T HNBR seals
1518.Ø.stroke.stroke 1.M standard seals, magnetic piston
1518.Ø.stroke.stroke 1.MV FPM seals, magnetic piston
1518.Ø.stroke.stroke 1.MT HNBR seals, magnetic piston

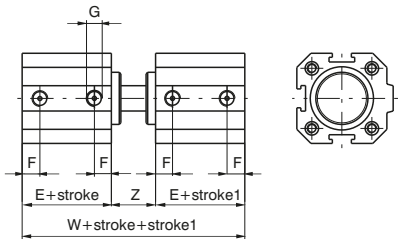

Bore	20	25	32	40	50	63	80	100
E	29	30,5	32	33,5	35	38	44	47
F	9	9,15	9,75	10,5	11	11,25	13,75	15,25
F1	17,5	18,35	19,75	20,5	21,5	24,25	24,75	26,25
G	G 1/8"	G 1/8"	G 1/8"	G 1/8"	G 1/8"	G 1/8"	G 3/8"	G 3/8"
U	59	60,5	67	68,5	70	78	89	97
W	72	74	79	89	98	104	119	125
Z	14	13	15	22	28	28	31	31

Variations with magnetic piston

E	34	35,5	37	38,5	40	43	49	52
F1	22,5	23,35	24,75	25,5	26,5	29,25	29,75	31,25
U	69	70,5	77	78,5	80	88	99	107
W	82	84	89	99	108	114	129	135

Overall dimensions and technical information are provided solely for informative purposes and may be modified without notice

Double acting version

Ordering code
1501.Ø.stroke.AR standard seals **1501.Ø.stroke.AR.V** FPM seals **1501.Ø.stroke.AR.T** HNBR seals

Double version with magnetic piston

Ordering code
1511.Ø.stroke.AR standard seals **1511.Ø.stroke.AR.V** FPM seals **1511.Ø.stroke.AR.T** HNBR seals

Cylinders with non-rotating device

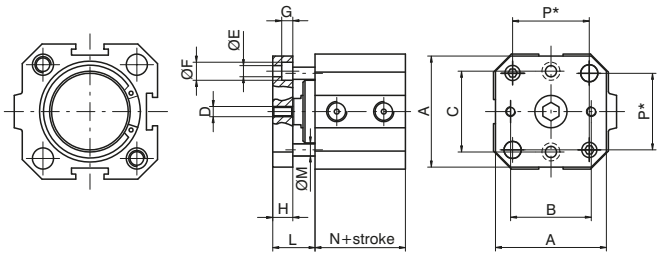

* = Distance between rods centres

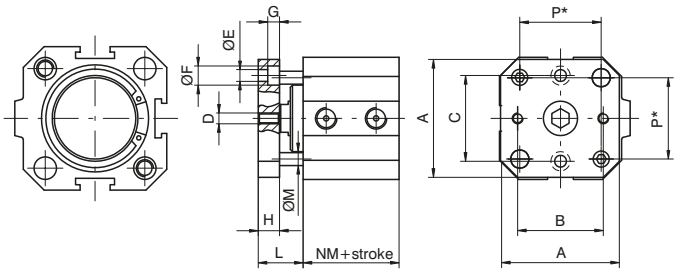

* = Distance between rods centres

It is possible, upon request to have four holes threaded and with counter bores in order to rear mount the cylinder as if it was standard.

Bore		20	25	32	40	50	63	80	100
A		35	40	45	55	65	80	100	120
B		22	26	32	40	50	62	82	103
C		22	28	34	40	50	62	82	103
D		M4	M5	M5	M5	M6	M6	M8	M8
Ø E		4,5	5,5	5,5	5,5	6,5	8,5	8,5	8,5
Ø F		7,5	9	9	9	10,5	13,5	13,5	13,5
G		4,5	5,5	5,5	5,5	6,5	8,5	8,5	8,5
H		8	8	10	10	12	12	15	15
L		15	14,5	17,5	21	26	26	30,5	30,5
Ø M		6	6	6	6	8	8	10	10
N		29	30,5	32	33,5	35	38	44	47
NM		34	35,5	37	38,5	40	43	49	52
P		26	28	32,5	38	46,5	56,5	72	89
Max. suggestion stroke		40	40	50	50	60	60	80	80
Weight	stroke 0	40	50	70	90	200	250	490	650
g		5	5	5	5	10	10	20	20

Rear clevis

Ordering code
1500.Ø.09F

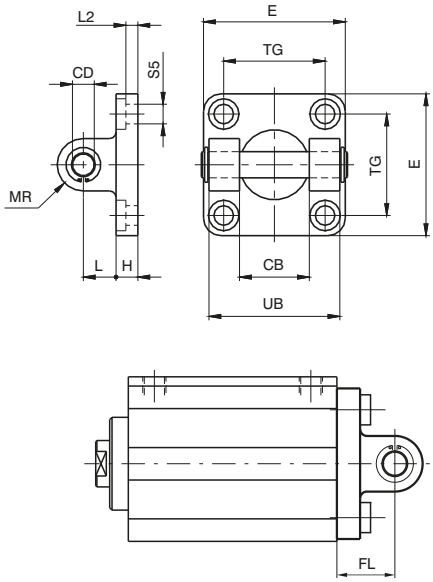

This allows anchorage of the cylinder both parallel and at a right angle to the plane; the cylinder rod can oscillate and self-align as necessary. It is made of aluminium alloy and painted black.

Bore	20	25	32	40	50	63	80	100
CB (h 9)	16	20	26	28	32	40	50	60
CD (H 9)	8	10	10	12	12	16	16	20
E	35	40	45	52	65	75	95	115
H	6	8	9	9	11	11	14	14
L	12	12	13	16	16	21	22	27
MR	8	9	10	12	12	16	16	20
TG	26	28	32,5	38	46,5	56,5	72	89
UB	35	40	45	52	60	70	90	110
FL	18	20	22	25	27	32	36	41
L2	/	/	5,5	5,5	6,5	6,5	10	10
S5 (H13)	5,5	6,6	6,6	6,6	9	9	11	11
Weight g	45	75	80	130	185	310	530	910

Rear clevis male

Ordering code
1500.Ø.09/1F

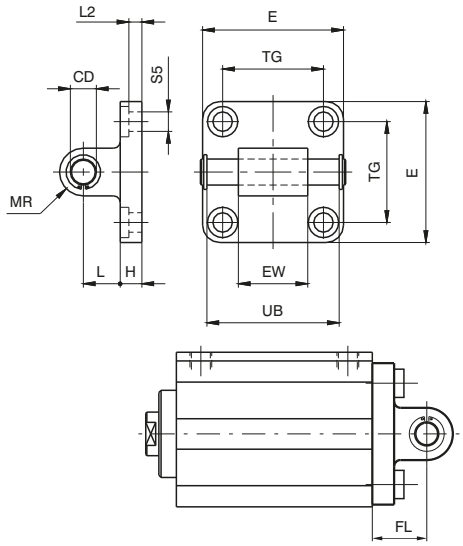

This allows anchorage of the cylinder both parallel and at a right angle to the plane; the cylinder rod can oscillate and self-align as necessary. It is made of aluminium alloy and painted black.

	Bore	20	25	32	40	50	63	80	100
	CD (h 9)	8	10	10	12	12	16	16	20
	E	35	40	45	52	65	75	95	115
	EW	16	20	26	28	32	40	50	60
	H	6	8	9	9	11	11	14	14
	L	12	12	13	16	16	21	22	27
	MR	8	9	10	12	12	16	16	20
	TG	26	28	32,5	38	46,5	56,5	72	89
	UB	35	40	46	53	61	71	91	111
	FL	18	20	22	25	27	32	36	41
	L2	/	/	5,5	5,5	6,5	6,5	10	10
	S5 (H 13)	5,5	6,6	6,6	6,6	9	9	11	11
every 10 mm	Weight g	53	85	90	130	190	340	580	960

Overall dimensions and technical information are provided solely for informative purposes and may be modified without notice

Slot fixing screws

Ordering code
1500.15F (from Ø20 to Ø32) **1500.16F** (from Ø40 to Ø63) **1500.18F** (Ø80 and Ø100)

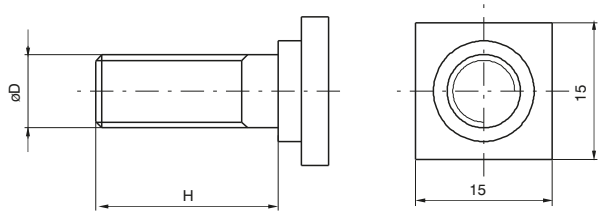

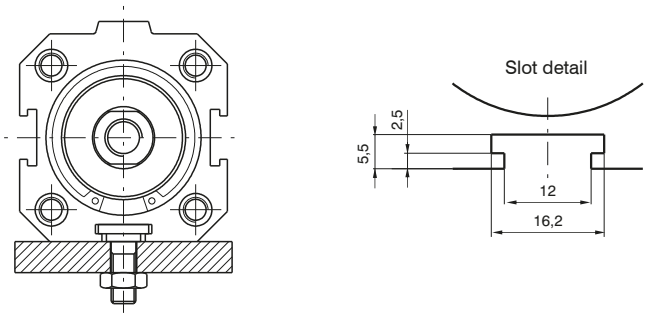

Example mounted with square headed screws on the plane.

Bore	20	25	32	40	50	63	80	100
ØD	M6	M6	M6	M8	M8	M8	M10	M10
H	15	15	15	20	20	20	25	25
Weight g	10			18			25	

Nipple with ISO standard thread

Ordering code
1500.Ø.17F

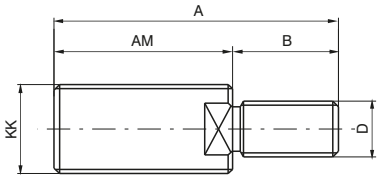

Fitted on the female thread of the compact cylinders, restore the ISO configurations rod (ISO 6432 for cylinders Ø 20 and Ø 25; ISO 6431 for cylinders from Ø 32 to Ø 100).

Bore	20	25	32	40	50	63	80	100
KK	M8x1,25	M10x1,25	M10x1,25	M12x1,25	M16x1,5	M16x1,5	M20x1,5	M20x1,5
AM	20	22	22	24	32	32	40	40
A	26	30	32	36	47	47	58	58
B	6	8	10	12	15	15	18	18
D	M4	M5	M6	M10	M12	M12	M16	M16
Weight g	8	15	16	27	65	65	110	110

Series 1500 - "EUROPE" compact cylinders

General

This series of cylinders is available in two versions with different threaded fixing holes.
The first one includes cylinders from Ø 32 to Ø 100 called "ISO" with fixing holes same as cylinders ISO 6431 - VDMA 24562. Cylinders from Ø 20 to Ø 100 called "UNITOP", parts of second series, are mainly according to standard UNITOP RU - P/6 - P/7. Cylinders Ø 12 and Ø 16 non standard, are interchangeable with similar products available on the market. The ISO version uses all fixing devices of series 1320 with exception of intermediate trunnion, while for cylinders Ø 12, Ø 16 and for "UNITOP" version are available fixing devices as flanges, foot, male and female clevis made with aluminium or steel. For use of magnetic sensors see directions on next page.

Construction characteristics

Body	anodised aluminium
End caps	from Ø12 to Ø25 aluminium alloy UNI 9006/1 anodised from Ø32 to Ø100 UNI 5076 aluminium die-casting and painted (cataphoresis)
Piston rod bushing	sintered bronze
Piston rod	from Ø12 to Ø25 stainless steel froml Ø32 to Ø100 C43 chromed (on request stainless steel for all bores)
Piston	from Ø12 to Ø25 plated zinc steel from Ø32 to Ø100 aluminium alloy 2011 UNI 9002/5
Seals	PUR (on request HNBR)
Spring	zinc plated steel for springs
Fixing screws	zinc plated steel

Operational characteristics

Fluid	Filtered air. No lubrication needed, if applied it shall be continuous.
Maximum working pressure	10 bar
Working temperature	-30°C - +80°C with standard seals (magnetic or non magnetic piston) -5°C - +80°C with HNBR seals (magnetic piston) -5°C - +120°C with HNBR seals (non magnetic piston)

Please follow the suggestions below to ensure a long life for these cylinders:
- use clean and lubricated air
- correct alignment during assembly with regard to the applied load so as to avoid radial components or bending the rod.
- avoid high speeds together with long strokes and heavy loads: this would produce kinetic energy which the cylinder cannot absorb, especially if used as a limit stop (in this case use mechanical stop device)
- evaluate the environmental characteristics of cylinder used (high temperature, hard atmosphere, dust, humidity etc.)

Please note: air must be dried for applications with lower temperature.
Use hydraulic oils H class (ISO VG32) for correct continued lubrication.
Our Technical Department will be glad to help.

Standard strokes for single acting cylinders

Ø12	10 mm max.
from Ø16 to Ø100	25 mm max.

Maximum suggested strokes

Ø12 and Ø16	100 mm
Ø20 and Ø25	200 mm
Ø32 and Ø40	300 mm
Ø50 and Ø63	400 mm
Ø80 and Ø100	500 mm

Longer strokes may be utilised if there is no radial loads on piston rod considering there isn't adjustable cushioning system.

Standard strokes for double acting cylinders

Ø12 and Ø16	from 5 to 40mm every 5mm
Ø20 and Ø25	from 5 to 50mm every 5mm
Ø32 - Ø100	from 5 to 80mm every 5mm

Maximum suggested strokes with non-rotating device

from Ø12 to Ø25	40 mm
from Ø32 to Ø100	80 mm

Minimum and maximum springs load

Bore	12	16	20	25	32	40	50	63	80	100
Min. load (N)	3,9	4,4	4,9	9,8	12,3	16,7	27,5	37,3	59,4	101,3
Max. load (N)	9,3	17,7	18,1	25,5	34,3	44,1	51,0	63,8	99,4	141,9

Overall dimensions and technical information are provided solely for informative purposes and may be modified without notice

BASIC version double and single acting

for bores from Ø 12 to Ø 25
use sensors codes
1580._, MHS._, MRS._ only

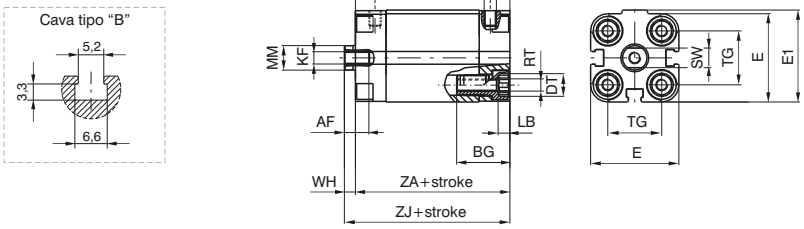

for bores from Ø 32 to Ø 50
use sensors codes
1500._, RS._, HS._ (slot A)
1580._, MHS._, MRS._
(slot B and slot A with adapter code 1380.01F)

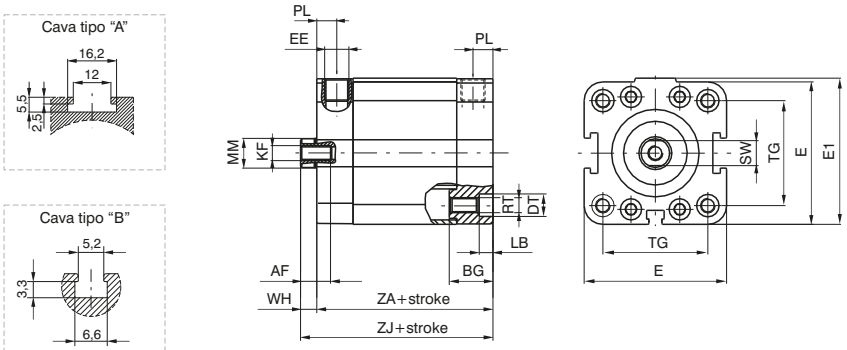

for bores from Ø 63 to Ø 100
use sensors codes
1500._, RS._, HS._ and
1580._, MHS._, MRS._
(with adapter code 1380.01F)

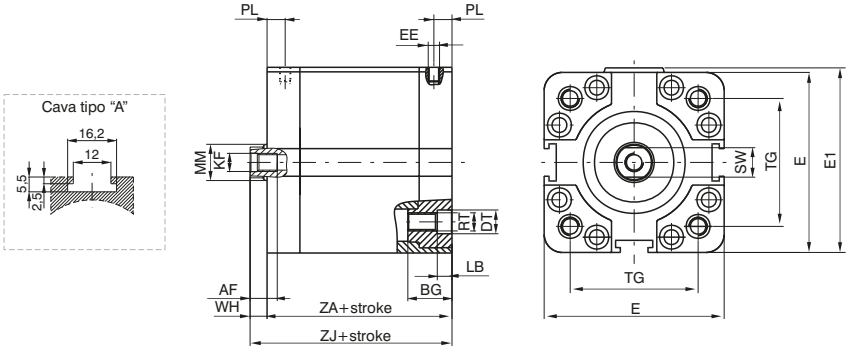

Through rod cylinder version double and single acting

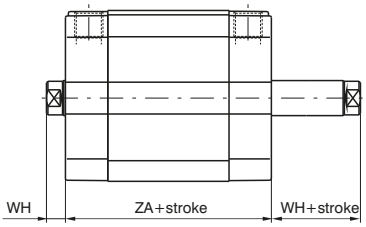

Tandem with opposite rods

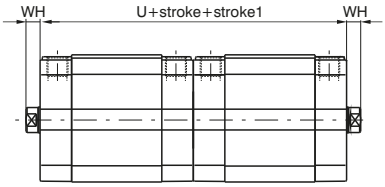

Tandem push with common rods

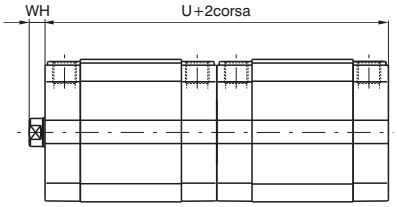

Opposed tandem with common rod

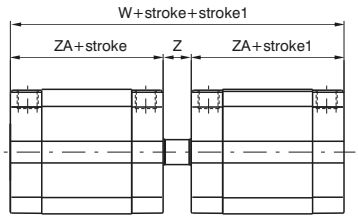

Tandem push with independent rods

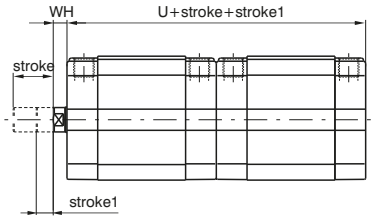

Ordering code

Basic version, through rod cylinder

15_ _. Ø . stroke . _ _ . _

- 1 = Double acting (magnetic)
- 2 = Front spring (magnetic)
- 3 = Rear spring (magnetic)
- 4 = Double acting (non magnetic)
- 5 = Front spring (non magnetic)
- 6 = Rear spring (non magnetic)

- 01 = Basic version - female piston rod
- 02 = Basic version - male piston rod
- 03 = Through rod version - female piston rod
- 04 = Through rod version - male piston rod
- 05 = Through rod version - bored male piston rod
- 06 = Through rod version - bored female piston rod
- 07 = Non - rotating version
- 08 = Through rod version with non rotating device on one side - female piston rod *
- 09 = Through rod version with non rotating device on one side - male piston rod *

- 1 = Chromed rod C43 (from Ø12 to Ø25 stainless steel)
- 2 = Stainless steel rod(from Ø32 to Ø100)

- 6 = ISO (Ø32 - Ø100)
- 7 = ISO HNBR (Ø32 - Ø100)
- 8 = UNITOP (Ø12 - Ø100)
- 9 = UNITOP HNBR (Ø12 - Ø100)

* for single acting version, the spring is on the anti-rotation side

Tandem version

15_ _. Ø . stroke .(stroke1) . _

- A = Tandem with opposite rods female thread
- E = Tandem with opposite rods male thread
- L = Tandem opposite rods with non rotating device on both sides
- C = Tandem push with common rods female thread
- G = Tandem push with common rods male thread
- H = Tandem push with common rods, push-pull version rod female threads
- N = Tandem push with common rods with non rotating device
- D = Opposed tandem with common rod
- B = Tandem push with independent rods female thread
- F = Tandem push with independent rods male thread
- M = Tandem push with independent rods with non rotating device
- P = Tandem through rod with independent rods - female thread
- Q = Tandem through rod with independent rods - male thread

- 1 = Chromed rod C43 (from Ø12 to Ø25 stainless steel)
- 2 = Stainless steel rod(from Ø32 to Ø100)

- 6 = ISO (Ø32 - Ø100)
- 7 = ISO HNBR (Ø32 - Ø100)
- 8 = UNITOP (Ø12 - Ø100)
- 9 = UNITOP HNBR (Ø12 - Ø100)

Table of dimensions

Bore		12	16	20	25	32	40	50	63	80	100
AF		6	8	10	10	12	12	12	12	16	20
BG		19	19	20	20	17,5	17,5	19,5	19,5	23,5	24,5
DT		6	6	8	8	10	9	10,5	10,5	14	14
E		29	29	36	40	48	57	67	80	102	122
E1		30	30	37,5	41,5	49,5	58,5	69	82	105	125
EE		M 5	M 5	M 5	M 5	G 1/8"	G 1/8"	G 1/8"	G 1/8"	G 1/8"	G 1/4"
KF		M 3	M 4	M 5	M 5	M 6	M 6	M 8	M 8	M 10	M12
LB		3,5	3,5	4,8	4,8	5,5	5,5	6,5	6,5	8,5	8,5
MM		6	8	10	10	12	12	16	16	20	25
PL		8	8	8	8	8	8	8	8	8,5	10,5
RT		M 4	M 4	M 5	M 5	M 6	M 6	M 8	M 8	M 10	M 10
SW		5	7	8	8	10	10	13	13	17	22
TG ISO		/	/	/	/	32,5	38	46,5	56,5	72	89
TG UNITOP		18	18	22	26	32	42	50	62	82	103
U		76	76	76	79	89	91	91	100	112	133
W		85	85	85	90	101	104	106	115	128	153
WH		4,5	4,5	4,5	5,5	6	6,5	7,5	7,5	8	10
Z		9	9	9	11	12	13	15	15	16	20
ZA	*	38	38	38	39,5	44,5	45,5	45,5	50	56	66,5
ZJ	*	42,5	42,5	42,5	45	50,5	52	53	57,5	64	76,5
Weight	stroke 0	88	90	140	170	210	320	460	690	1390	2290
g	every 5 mm	8	8	12	13	15	19	25	31	50	66

*** These dimensions increase of 10 mm for cylinders ø 12 front spring version.**

Tabular weights above refer to Basic Versions. The weights of Tandem versions are approximately double those shown.

Overall dimensions and technical information are provided solely for informative purposes and may be modified without notice

Basic version male piston rod

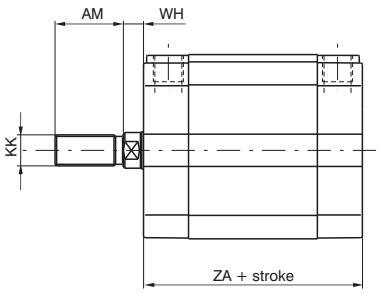

Through rod cylinder version, male rod

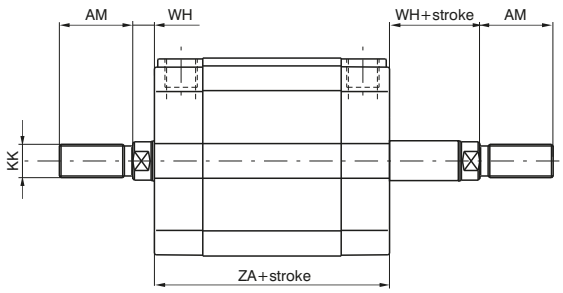

Through rod cylinder version, bored male piston rod

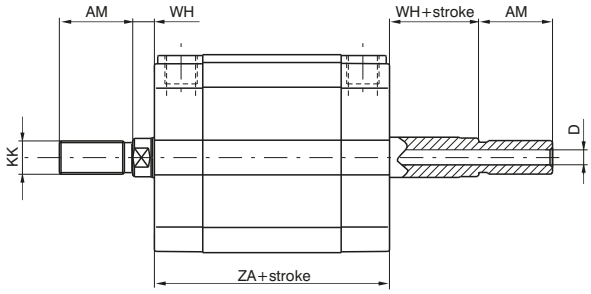

Through rod cylinder version, bored female piston rod

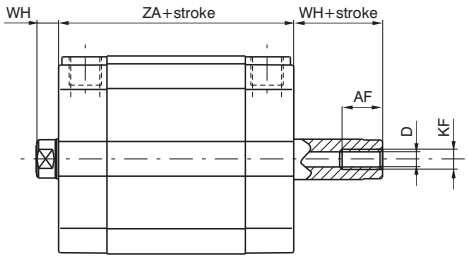

Maximum allowed stroke = ZB (see table)

Non-rotating version

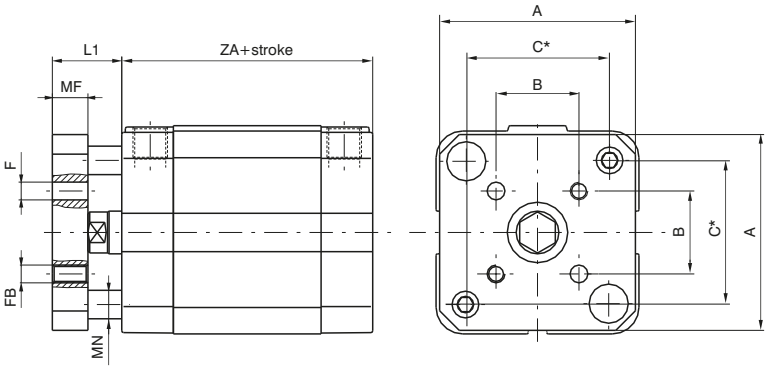

* = Distance between rods centres

Bore	12	16	20	25	32	40	50	63	80	100
A	28,5	28,5	35,5	39,5	45	55	65	80	100	120
AF	6	8	10	10	12	12	12	12	16	20
AM	16	20	22	22	22	22	24	24	32	40
B	9,9	9,9	12	15,6	19,8	23,3	29,7	35,4	46	56,6
C	18	18	22	26	34	40,5	49	59,5	77	94
D	2,3	3,2	3,8	3,8	4,5	4,5	6	6	8	10
F	3	3	4	5	5	5	6	6	8	10
FB	M 3	M 3	M 4	M 5	M 5	M 5	M 6	M 6	M 8	M 10
KF	M 3	M 4	M 5	M 5	M 6	M 6	M 8	M 8	M 10	M 12
KK	M6X1	M8X1,25	M10X1,25	M10X1,25	M10X1,25	M10X1,25	M12X1,25	M12X1,25	M16X1,5	M20X1,5
L1	10,5	10,5	12,5	13,5	16	16,5	19,5	19,5	22	24
MF	6	6	8	8	10	10	12	12	14	14
MN	5	5	6	6	8	8	10	10	12	12
WH	4,5	4,5	4,5	5,5	6	6,5	7,5	7,5	8	10
ZA	38	38	38	39,5	44,5	45,5	45,5	50	56	66,5
ZB	20	25	50	50	50	50	75	75	80	80

Overall dimensions and technical information are provided solely for informative purposes and may be modified without notice

Front and rear flanges

Ordering code
ISO **1500.Ø.03F** *steel* *UNITOP* **1580.Ø.03F** *steel* **1580.Ø.03/1F** *aluminium*

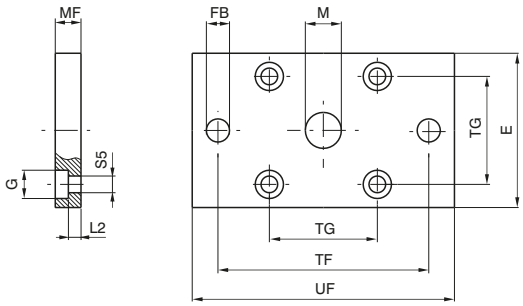

For bores from 12 to 25

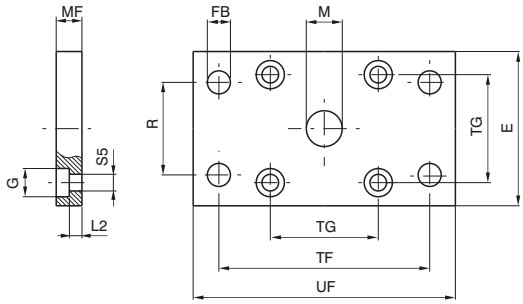

For bores from 32 to 100

Plate which allows anchorage of the cylinder at a right angle to the plane. It is made with zinc-plated extruded steel or with aluminium.

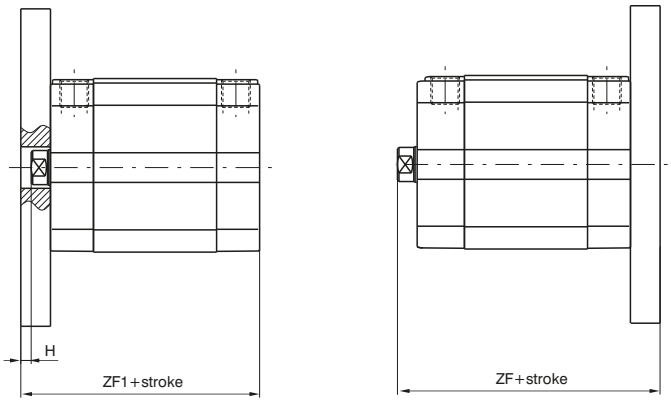

Front Rear

		ISO Dimensions						UNITOP Dimensions								
Bore		32	40	50	63	80	100	12-16	20	25	32	40	50	63	80	100
E		45	52	65	75	95	115	29	36	40	50	60	68	87	107	128
S5 (H13)		6,6	6,6	9	9	11	11	4,5	5,5	5,5	6,6	6,6	9	9	11	11
FB(H13)		7	9	9	9	12	14	5,5	6,6	6,6	7	9	9	9	12	14
G		10,5	11	15	15	18	18	9	10	10	11	11	15	15	18	18
H		4	3,5	4,5	4,5	8	6	5,5	5,5	4,5	4	3,5	4,5	7,5	7	5
L2		5	5	6,5	6,5	8	8	4,6	4,6	4,6	3,6	3,6	3,4	6,4	4,4	4,4
M(H11)		30	35	40	45	45	55	10	12	12	14	14	18	18	23	28
MF(JS14)		10	10	12	12	16	16	10	10	10	10	10	12	15	15	15
R(JS14)		32	36	45	50	63	75	/	/	/	32	36	45	50	63	75
TF(JS14)		64	72	90	100	126	150	43	55	60	65	82	90	110	135	163
TG		32,5	38	46,5	56,5	72	89	18	22	26	32	42	50	62	82	103
UF		80	90	110	120	150	170	55	70	76	80	102	110	130	160	190
ZF		60,5	62	65	69,5	80	92,5	52,5	52,5	55	60,5	62	65	72,5	79	91,5
ZF1		54,5	55,5	57,5	62	72	82,5	48	48	49,5	54,5	55,5	57,5	65	71	81,5
Weight	Steel	160	250	480	620	1430	1970	100	170	210	270	430	600	1210	1810	2610
g	Aluminium	/	/	/	/	/	/	35	60	70	90	150	210	420	630	900

Overall dimensions and technical information are provided solely for informative purposes and may be modified without notice

Foot

Ordering code
ISO **1500.Ø.05/1F** (1 piece) *UNITOP* **1580.Ø.05/1F** (1 piece)

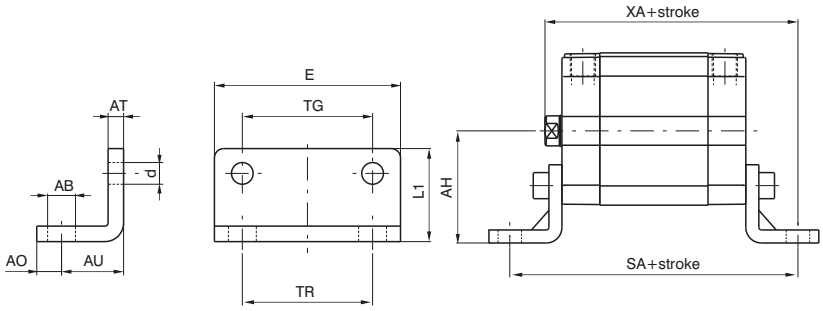

Element used to anchor the cylinder parallel to the mounting plane. They are made with stamped and pierced sheet metal black painted.

	ISO Dimensions						UNITOP Dimensions								
Bore	32	40	50	63	80	100	12-16	20	25	32	40	50	63	80	100
AB (H14)	7	9	9	9	12	14	5,5	6,6	6,6	6,6	9	9	11	11	13,5
AH (JS15)	32	36	45	50	63	71	22	27	30	32	42,5	47	59,5	65,5	78
AO (±0,2)	11	8	15	13	14	16	4,5	6	6	8	8	8	12	12	12
AT	4	4	5	5	6	6	3	4	4	5	5	6	6	8	8
AU (±0,2)	24	28	32	32	41	41	13	16	16	18	20	24	27	30	33
d	7	7	9	9	11	11	4,4	5,4	5,4	6,6	6,6	9	9	11	11
E	45	52	65	75	95	115	30	36	40	50	60	68	84	102	123
L1	30	30	36	35	47	53	17,5	22	23	24	29,5	30	39	36,5	38,5
SA	92,5	101,5	109,5	114	138	148,5	64	70	71,5	80,5	85,5	93,5	104	116	132,5
TG	32,5	38	46,5	56,5	72	89	18	22	26	32	42	50	62	82	103
TR	32	36	45	50	63	75	18	22	26	32	42	50	62	82	103
XA	74,5	80	85	89,5	105	117,5	55,5	58,5	61	68,5	72	77	84,5	94	109,5
Weight g	50	70	120	180	320	400	20	35	45	75	100	150	250	390	500

UNITOP rear male clevis for bores from 12 to 25

Ordering code
1580.Ø.09/1F (Aluminium) **1580.Ø.09/2F** (Steel)

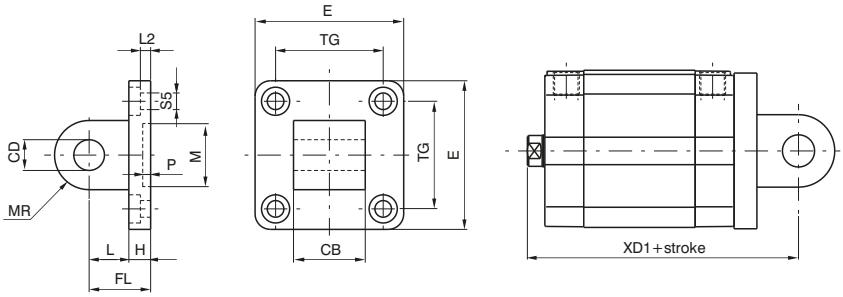

This type of mounting allows anchorage of the cylinder both parallel and at the right angle to the plane. The cylinder rod can oscillate and self-align to the connected load. It's made with aluminium alloy black painted or with zinc plated steel (from Ø 20).

Bore		12-16	20	25
CB(h14)		12	16	16
CD (H9)		6	8	8
E (±0,5)		27	34	38
FL		16	20	20
H		6	6	6
L		10	14	14
L2 (±0,5)		2,6	2,6	2,6
M (H11)		10	12	12
MR		6	8	8
P (+0,3)		3	3	3
S5 (H13)		4,5	5,5	5,5
TG (±0,2)		18	22	26
XD1		58,5	62,5	65
Weight g	Steel	/	70	80
	Aluminium	13	25	28

Front female clevis for bores from 32 to 100

Ordering code
ISO Aluminium **1500.Ø.08F** *UNITOP* (Aluminium) **1580.Ø.11F** *UNITOP* (Steel) **1580.Ø.13F**

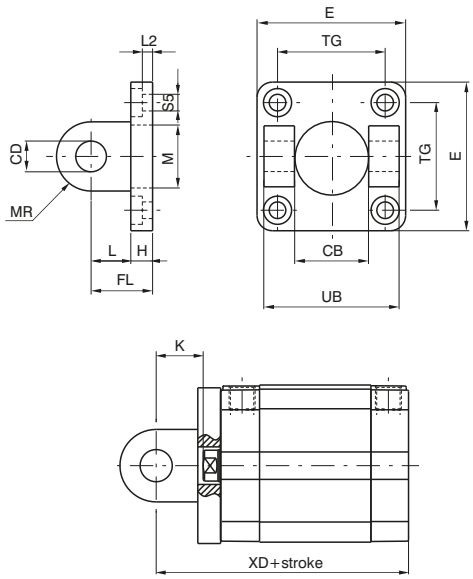

This type of mounting allows anchorage of the cylinder both parallel and at the right angle to the plane. The cylinder rod can oscillate and self-align to the connected load. It's made with aluminium alloy black painted or with zinc plated steel.

Rear female clevis for bores from 32 to 100

Ordering code
ISO Aluminium **1500.Ø.09F** *UNITOP* (Aluminium) **1580.Ø.10F** *UNITOP* (Steel) **1580.Ø.12F**

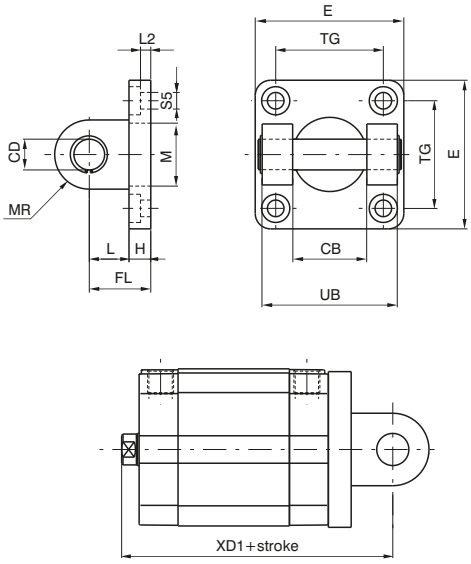

This type of mounting allows anchorage of the cylinder both parallel and at the right angle to the plane. The cylinder rod can oscillate and self-align to the connected load. It's made with aluminium alloy black painted or with zinc plated steel.

			ISO Dimensions						UNITOP Dimensions					
Bore			32	40	50	63	80	100	32	40	50	63	80	100
CB (H14)			26	28	32	40	50	60	26	28	32	40	50	60
CD (H9)			10	12	12	16	16	20	10	12	12	16	16	20
E			45	52	65	75	95	115	48	58	66	83	102	123
FL			22	25	27	32	36	41	22	25	27	32	36	41
H			9	9	11	11	14	14	9	9	11	11	13	15
K			16	18,5	19,5	24,5	28	31	16	18,5	19,5	24,5	28	31
L			13	16	16	21	22	27	13	16	16	21	23	26
L2			5,5	5,5	6,5	6,5	10	10	5,5	5,5	6,5	6,5	10	10
M			30	35	40	45	45	55	14	14	18	18	23	28
MR			10	12	12	16	16	20	10	12,5	12,5	15	15	20
S5			6,6	6,6	9	9	11	11	6,6	6,6	9	9	11	11
TG			32,5	38	46,5	56,5	72	89	32	42	50	62	82	103
UB			45	52	60	70	90	110	45	52	60	70	90	110
XD			66,5	70,5	72,5	82	92	107,5	66,5	70,5	72,5	82	92	107,5
XD1			72,5	77	80	89,5	100	117,5	72,5	77	80	89,5	100	117,5
Weight g	Steel	Front	/	/	/	/	/	/	180	310	420	700	1240	2210
		Rear	/	/	/	/	/	/	220	360	480	830	1390	2500
	Alum.	Front	40	70	120	170	360	570	65	110	145	240	430	770
		Rear	80	120	180	300	500	860	80	125	170	290	480	865

Overall dimensions and technical information are provided solely for informative purposes and may be modified without notice

Slot fixing screws

Ordering code
1500.17F small slot (from Ø12 to Ø50) **1500.15F** large slot (Ø32) **1500.16F** large slot (from Ø40 to Ø63) **1500.18F** large slot (from Ø80 to Ø100)

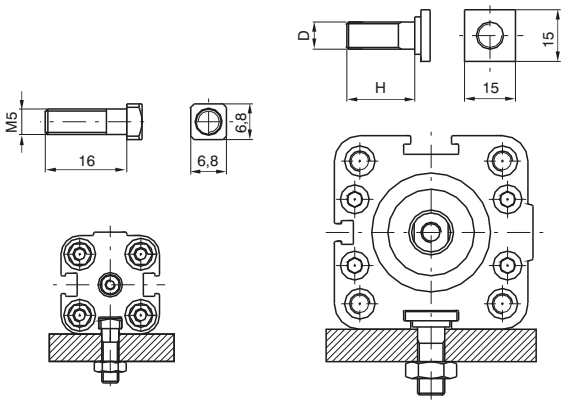

Example of mounting with square head screws

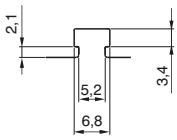

Small slot detail

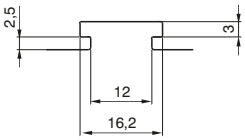

Large slot detail

Bore	12÷50	32	40÷63	80÷100
D	/	M6	M8	M10
H	/	15	20	25
Weight g	8	10	18	25

Centering rings

Ordering code
1580.Ø.02F

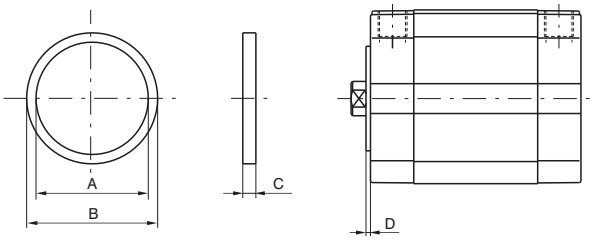

This aluminium ring allows the center assembling of the cylinder.

Bore	32	40	50	63	80	100
A	25	30	35	40	40	50
B (e11)	30	35	40	45	45	55
C	3,5	3,5	3,5	4,5	5,5	5,5
D	1,5	1,5	1,5	2	2,5	2,5
Weight g	2	2	3	4	5	6

Sensor adapter

Ordering code
1380.01F

Weight g 2

Nylon accessory for sensor mounting 1580._, MRS._, MHS._ inside "A" shape.

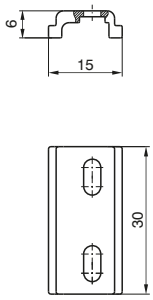

Series 1500 - Compact cylinders ECOMPACT-S

General

Based on the **ECOMPACT** series with piston rods and centring diameters according to ISO 15552 standard.

Construction characteristics

Body	anodised aluminium
End caps	aluminium alloy casting painted with brass centring bearing
Bearing piston rod	spheroid bronze on steel band with P.T.F.E. coat
Piston rod	C43 chromed steel (on request stainless steel)
Piston	Ø32 and Ø40 acetal resin (aluminium on request) Ø50 and Ø63 aluminium (with FPM seals, aluminium for all of standard diameters)
Seals	standard: NBR oil resistant rubber, PUR piston rod seals (PUR or FPM on request)
Spring	stainless steel
Fixing screws	plated zinc steel

Operational characteristics

Fluid	Filtered air. No lubrication needed, if applied it shall be continuous
Max. pressure	10 bar
Operating temperature	-5°C - +70°C with standard seals (magnetic or non magnetic piston) -30°C - +80°C with PUR seals (magnetic or non magnetic piston) -5°C - +80°C with FPM seals (magnetic piston) -5°C - +150°C with FPM seals (non magnetic piston)

Please follow the suggestions below to ensure a long life for these cylinders:
- use clean and lubricated air
- correct alignment during assembly with regard to the applied load so as to avoid radial components or bending the rod.
- avoid high speeds together with long strokes and heavy loads: this would produce kinetic energy which the cylinder cannot absorb, especially if used as a limit stop (in this case use mechanical stop device and aluminium piston)
- evaluate the environmental characteristics of cylinder used (high temperature, hard atmosphere, dust, humidity etc.)

Please note: air must be dried for applications with lower temperature.
Use hydraulic oils H class (ISO VG32) for correct continued lubrication.
Our Technical Department will be glad to help.

Stroke tolerance, minimum and maximum spring loads and cushioning length

Bore	Stroke tolerance	Minimum and maximum spring load		Cushioning length
(mm)	(mm)	(N)		(mm)
		min.	max.	
Ø32	+2 / 0 mm	19,6	25,5	6,5
Ø40		25,5	42,2	8
Ø50		44,1	96,3	7,5
Ø63	+2,5 / 0 mm	44,1	96,3	7,5

Overall dimensions and technical information are provided solely for informative purposes and may be modified without notice

Standard stroke

DOUBLE ACTING BASIC and THROUGH ROD CYLINDER version

Bore	Stroke																										
	5	10	15	20	25	30	35	40	45	50	55	60	65	70	75	80	100	125	150	160	200	250	300	320	350	400	450	500
WITHOUT CUSHIONING DEVICE																												
Ø32	●	●	●	●	●	●	●	●	●	●	●	●	●	●	●	●	●	●	●	●	●	●	●					
Ø40	●	●	●	●	●	●	●	●	●	●	●	●	●	●	●	●	●	●	●	●	●	●	●					
Ø50	●	●	●	●	●	●	●	●	●	●	●	●	●	●	●	●	●	●	●	●	●	●	●	●	●	●		
Ø63	●	●	●	●	●	●	●	●	●	●	●	●	●	●	●	●	●	●	●	●	●	●	●	●	●	●		
WITH CUSHIONING DEVICE																												
Ø32					●	●	●	●	●	●	●	●	●	●	●	●	●	●	●	●	●	●	●					
Ø40					●	●	●	●	●	●	●	●	●	●	●	●	●	●	●	●	●	●	●					
Ø50					●	●	●	●	●	●	●	●	●	●	●	●	●	●	●	●	●	●	●	●	●	●		
Ø63					●	●	●	●	●	●	●	●	●	●	●	●	●	●	●	●	●	●	●	●	●	●		

DOUBLE ACTING THROUGH ROD CYLINDER BORED version

Bore	Stroke																											
	5	10	15	20	25	30	35	40	45	50	55	60	65	70	75	80	25	30	35	40	45	50	55	60	65	70	75	80
	WITHOUT CUSHIONING DEVICE																**WITH CUSHIONING DEVICE**											
Ø32	●	●	●	●	●	●	●	●	●	●							●	●	●	●	●	●						
Ø40	●	●	●	●	●	●	●	●	●	●							●	●	●	●	●	●						
Ø50	●	●	●	●	●	●	●	●	●	●	●	●	●	●	●		●	●	●	●	●	●	●	●	●	●	●	
Ø63	●	●	●	●	●	●	●	●	●	●	●	●	●	●	●		●	●	●	●	●	●	●	●	●	●	●	

Available versions

BASIC version

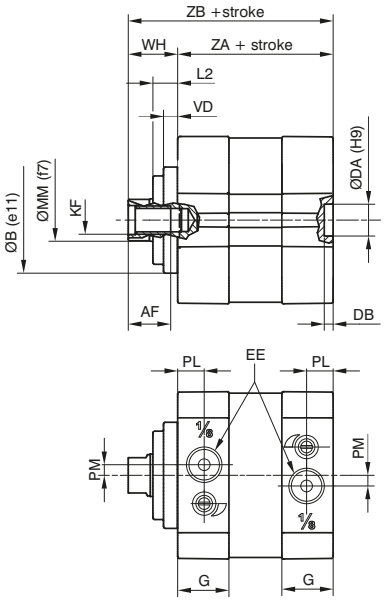

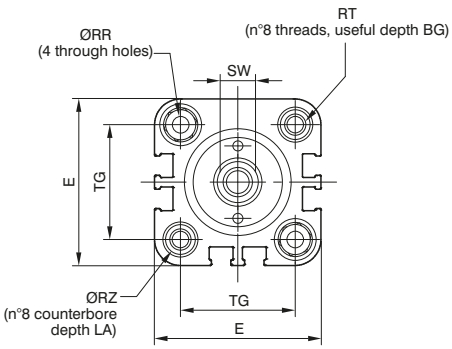

Sensor slot detail
type "B"
(n° 6 slots)

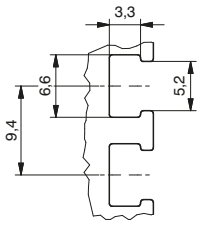

THROUGH ROD CYLINDER version

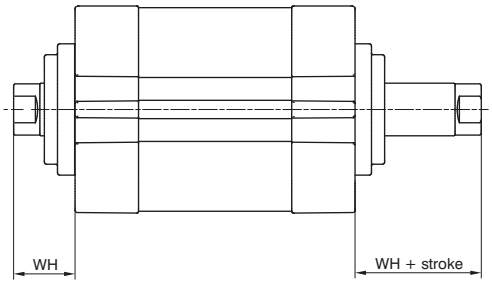

Ordering codes

15 _ _.Ø.stroke. _ _ . _

- **1** = Double acting, magnetic piston
- **4** = Double acting, non magnetic piston

- **0** = NBR seals and C43 chromed plated rod
- **1** = NBR seals and stainless steel rod
- **4** = PUR seals and C43 chromed plated rod
- **5** = PUR seals and stainless steel rod
- **6** = FPM seals and C43 chromed plated rod
- **7** = FPM seals and stainless steel rod

- **4** = Non-cushioned version (mechanical cushioning only)
- **5** = Versions with adjustable end of stroke cushioning system

**
- **10** = Basic, female threaded rod
- **11** = Basic, male threaded rod
- **12** = through rod, female threaded rod
- **13** = through rod, male threaded rod
- **14** = through rod, bored female threaded rod
- **15** = through rod, bored male threaded rod

** It is possible to order the Ø32 and Ø40 cylinders with an aluminium piston by replacing the '1' with '2' in the ordering code.
Example: 1540.32.10.10.1 (Acetyl Resin Piston)
1540.32.10.20.1 (Aluminium Piston version)

Seals compounds scheme
NBR: oil resistant nitrilic rubber seals
PUR: polyurethane seals
FPM: fluoropolymer rubber seals

Table of dimensions

Bore		Ø32	Ø40	Ø50	Ø63
AF (min)		12	16	20	20
ØB (e11)		30	35	40	45
BG		16	16	16	16
ØDA (H9)		9	9	12	12
DB (+0,1/0)		2,5	2,5	2,6	2,6
E (max)		47,5	55	66	78
EE		G1/8"	G1/8"	G1/8"	G1/8"
G		14,5	15	15	15
KF		M8	M10	M12	M12
LA (0/-0,1)		5	5	5	5
L2		7	7	10	10
ØMM (f 7)		12	16	20	20
PL (+0,1/0)		7,5	8	8	8
PM		3	/	/	/
ØRR (min)		5,1	5,1	6,6	6,6
RT		M6	M6	M8	M8
ØRZ (min)		8,5	8,5	10,5	10,5
SW (0/-0,1)		10	13	17	17
TG (±0,2)		32,5	38	46,5	56,5
VD		4	4	5	5
WH (±1)		14	14	18	18
ZA (±0,5)		44	45	45	49
ZB (+1/0)		58	59	63	67
Weight	stroke	240	330	530	700
gr.	every 5mm	13	17	24	27

Basic version male piston rod

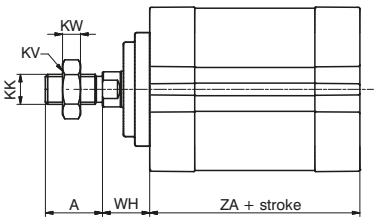

Through rod version male rod

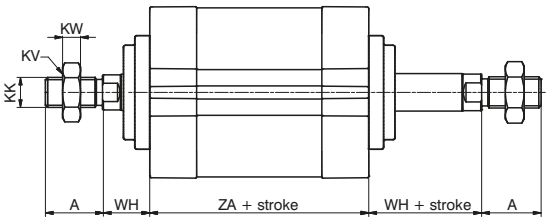

Through rod version bored female piston rod

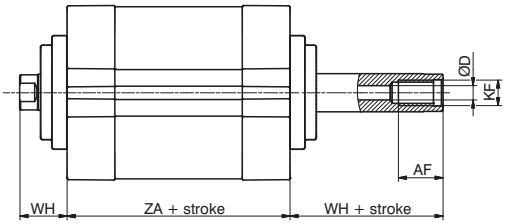

Through rod version bored male piston rod

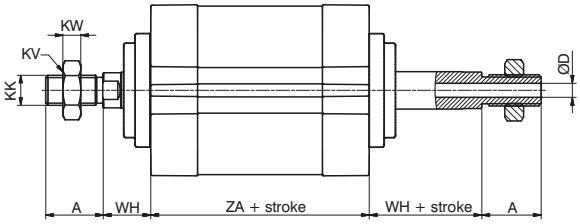

Bore	A (0/-0,5)	AF (min)	ØD	KF	KK	KV	KW	WH (±1)	ZA (±0,5)
Ø32	22	14	4,5	M8	M10x1,25	17	6	14	44
Ø40	24	18	4,5	M10	M12x1,25	19	7	14	45
Ø50	32	24	6	M12	M16x1,5	24	8	18	45
Ø63	32	24	6	M12	M16x1,5	24	8	18	49

Overall dimensions and technical information are provided solely for informative purposes and may be modified without notice

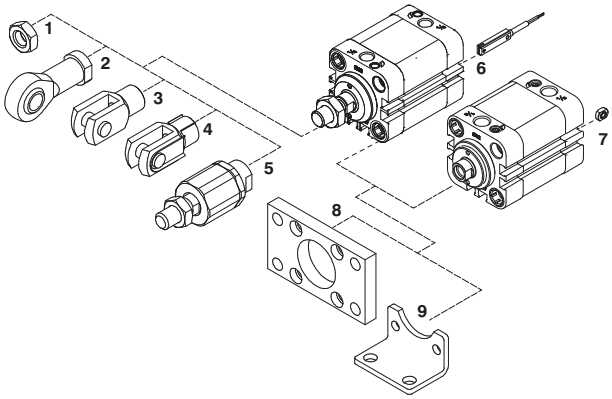

Sensor and piston rod accessories

Pos.	Description	Ordering code	
1	Rod lock nut	**1320.32.18F** **1320.40.18F** **1320.50.18F**	(Ø32) (Ø40) (Ø50-Ø63)
2	Ball joint	**1320.32.32F** **1320.40.32F** **1320.50.32F**	(Ø32) (Ø40) (Ø50-Ø63)
3	Fork	**1320.32.13F** **1320.40.13F** **1320.50.13F**	(Ø32) (Ø40) (Ø50-Ø63)
4	Fork with clips	**1320.32.13/1F** **1320.40.13/1F** **1320.50.13/1F**	(Ø32) (Ø40) (Ø50-Ø63)
5	Self aligning joint	**1320.32.33F** **1320.40.33F** **1320.50.33F**	(Ø32) (Ø40) (Ø50-Ø63)
6	Sensors	(See chapter 6 magnetic sensor)	
7	Valves direct mounting bolt	**1500.20F**	(Ø32 - Ø63)

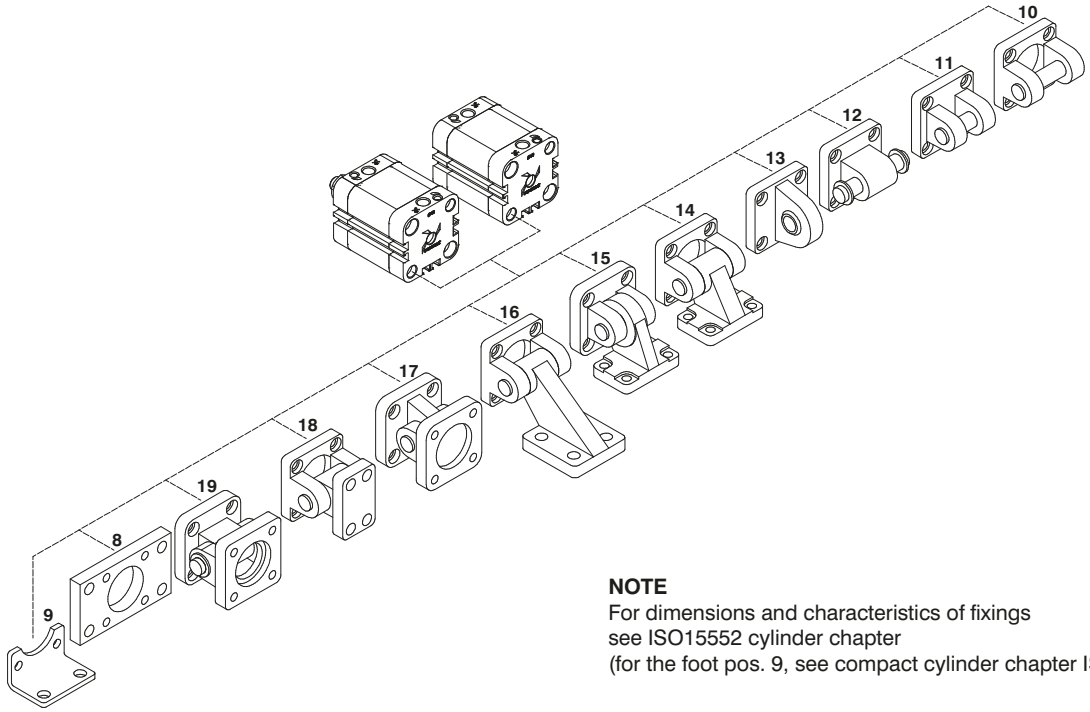

NOTE
For dimensions and characteristics of fixings
see ISO15552 cylinder chapter
(for the foot pos. 9, see compact cylinder chapter ISO 21287).

Fixing

Pos.	Description	Ordering code	
		Aluminium	Steel
8	Flange (MF2)	**1390.Ø.03FP**	**1380.Ø.03F**
9	Foot (MS1)	/	**1540.Ø.05/1F**
10	Rear female clevis (MP2)	**1380.Ø.09F**	**1320.Ø.20F**
11	Narrow rear female clevis (AB6)	**1380.Ø.30F**	**1320.Ø.29F**
12	Rear male clevis (MP4)	**1380.Ø.09/1F**	**1320.Ø.21F**
13	Rear male clevis (with jointed head - MP6)	**1380.Ø.15F**	**1320.Ø.25F**
14	Square angle trunnion (Ab7)	**1380.Ø.35F**	**1320.Ø.23F**
15	Square angle trunnion (with jointed head)	/	**1320.Ø.27F**
16	Square angle trunnion (not specified by ISO 15552)	**1380.Ø.11F**	/
17	Standard trunnion (with jointed head)	**1380.Ø.36F**	**1320.Ø.26F**
18	Standard trunnion (not specified by ISO 15552)	**1380.Ø.10F**	/
19	Complete standard trunnion	**1380.Ø.22F**	**1320.Ø.22F**

Overall dimensions and technical information are provided solely for informative purposes and may be modified without notice

Admissible maximum radial load diagram

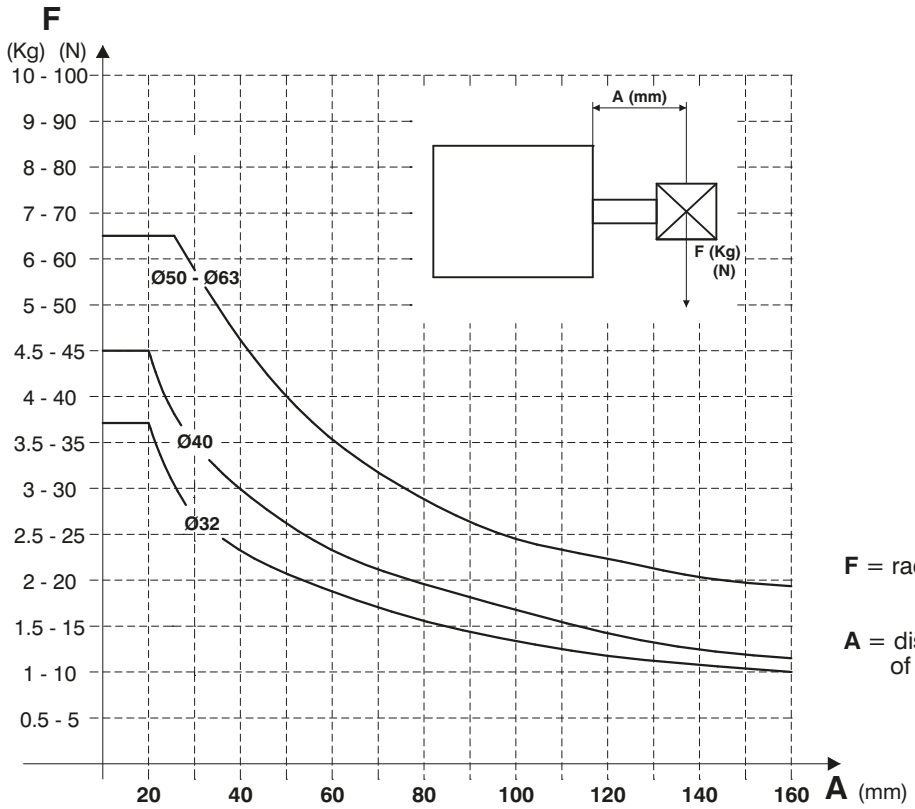

F = radial load (Kg and N)

A = distance between the load (F) centre of gravity and the cylinder front end cap

The diagram shows the maximum radial load F (in Newtons) that can be applied to the cylinder piston rod as a function of the distance **A** (in mm), under static conditions

End of stroke cushioning capacity diagram

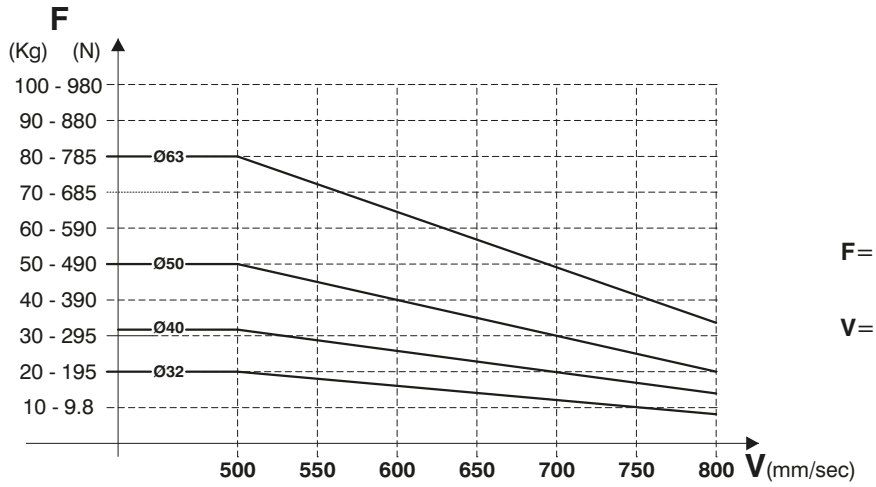

F= moved cylinder load (Kg and N)

V= load speed

The diagram shows, for each diameter, the safety curves relative to the maximum loads which can be moved by the cylinder in function of it's speed **V**. The data has been calculated under the following test conditions: Cylinder mounted vertically with the rod pointing down, air pressure at 5 bar and with a guided load.
Important: Do not exceed the recommended values in the table as reduced life or damage to the cylinder may result.

Overall dimensions and technical information are provided solely for informative purposes and may be modified without notice

Multimount cylinders

Ordering code

6500.Ø.stroke. 1 . _

- Ø: **10**, **16**, **20**, **25**
- _: = non magnetic; **M** = magnetic

Construction characteristics

Body	anodised aluminium
Piston rod	stainless steel
Piston	brass
Rods bushing	sinterize bronze
End plate	anodised aluminium
Cushioning washer	PUR
Seal	oil resistant NBR rubber

Technical characteristics

Fluid	Filtered air. No lubrication needed, if applied it shall be continuous.
Minimum working pressure	0.6 bar (for bore Ø10 - Ø16) 0.5 bar (for bore Ø20 - Ø32)
Max pressure	7 bar
Operating temperature	-5°C - +70°C
Cushioning	with elastic bumper
Stroke tolerance	+1 / 0 mm
Piston speed	50 - 500 mm/sec (without load)

Standard stroke

	Stroke							
Bore	5	10	15	20	25	30	40	50
Ø10	●	●	●	●	●	●		
Ø16	●	●	●	●	●	●		
Ø20	●	●	●	●	●	●	●	●
Ø25	●	●	●	●	●	●	●	●

Overall dimensions

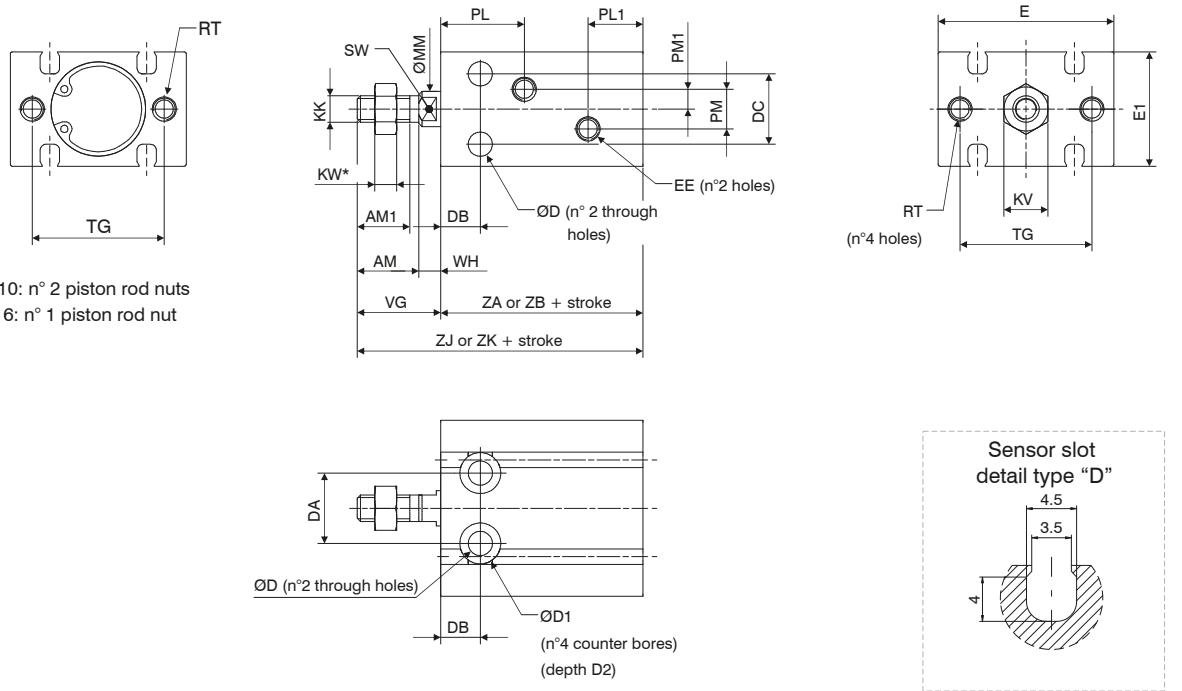

Table of dimensions

		Bore			
		Ø10	Ø16	Ø20	Ø25
AM		/	12,5	14	18
AM1		10	11	12	15,5
ØD		Ø3,2	Ø4,5	Ø5,5	Ø5,5
ØD1		Ø6	Ø7,6	Ø9,3	Ø9,3
D2		5	6,5	8	9
DA		11	14	16	20
DB		7	7	9	10
DC		9	12	16	20
E		24	32	40	50
E1		15	20	26	32
EE		M5	M5	M5	M5
KK		M4	M5	M6	M8
KV		7	8	10	13
KW		3	4	5	5
ØMM		Ø4	Ø6	Ø8	Ø10
PL		16,5	16,5	19	21,5
PL1		10	11,5	12,5	13
PM		/	4	9	9
PM1		/	2	4,5	4,5
RT		M3 (useful depth 5)	M4 (useful depth 6)	M5 (useful depth 8)	M5 (useful depth 8)
SW		/	5	6	8
TG		18	25	30	38
VG		16	16	19	23
WH		/	3,5	5	5
ZA	magnetic	36	40	46	50
ZB	non magnetic	36	30	36	40
ZJ	magnetic	52	56	65	73
ZK	non magnetic	52	46	55	63
Weight (g)					
Stroke 0		32	44	84	159
every 5 mm		4	6	11	17

Series 6100 - 6101 - 6110 - Guided compact cylinder

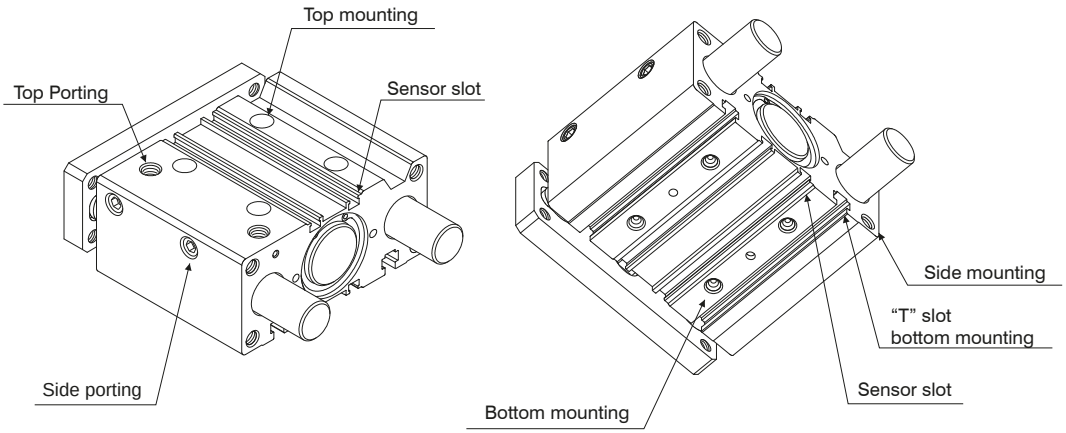

These guided compact cylinders, characterised by reduced overall dimensions, can be used for the compression, conveyance and manipulation of objects in many industrial sectors; similarly they can also be used in pushing, lifting and stopping applications.

These cylinders are available in sizes 32mm to 63 mm diameter, and comprise a single compact cylinder with integral guide rods, making it a true guide cylinder designed with installation flexibility and space saving in mind.

The rod guide is available in two styles:
Self-lubricating bronze bushes - useful for absorbing lateral loads and forces, especially as a stopper.
Bearing bushes - guaranteeing high precision and uniform movement with low friction characteristics, useful with mis-aligned loads.
Guided compact cylinders are ideal for use in applications requiring a combination of reduced dimensions and anti-rotation features. Mounting can be achieved on three sides through holes or "T" slots.

Adjustable mounting holes in the front plate ensure safe and accurate assembly. Pneumatic connections can be made to either lateral or top ports (lateral ports plugged on standard units).
When sensors are required, there are special slots in the barrel extrusion where 1580 series miniaturised sensors are easily fitted.

Overall dimensions and technical information are provided solely for informative purposes and may be modified without notice

Guided compact cylinder

Ordering code

6100.Ø.stroke. _ . _

- **12**
- **16**
- **20**
- **25**
- **32**
- **40**
- **50**
- **63**

Side supply ports closed
L = Top supply ports closed

B = Control unit with bronze bush
C = Control unit with bearing bush

Construction characteristics

Body	anodised aluminium
Guide rods	C43 chromed steel (control unit with bronze bush) tempered and chromed steel (control unit with bearing bush)
Piston	aluminium
Piston rod	stainless steel (for bores Ø12, Ø16, Ø20, Ø25) C43 chromed steel (for bores Ø32, Ø40, Ø50, Ø63)
Rods bushing	bronze or bearing bushing
End cap	anodised aluminium
Piston seal	oil resistant NBR rubber
Piston rod seal	PUR (NBR 12-16)
Wipers	PUR
Plate	nickel plated steel

Operational characteristics

Function	double acting
Fluid	Filtered air. No lubrication needed, if applied it shall be continuous.
Working pressure	max. 10 bar
Working temperature	-5°C - +70°C
Cushioning	elastic bumper on both ends

Standard stroke

	Stroke											
Bore	**10**	**20**	**25**	**30**	**40**	**50**	**75**	**100**	**125**	**150**	**175**	**200**
Ø12	●	●		●	●	●	●	●				
Ø16	●	●		●	●	●	●	●				
Ø20		●		●	●	●	●	●	●	●	●	●
Ø25		●		●	●	●	●	●	●	●	●	●
Ø32			●			●	●	●	●	●	●	●
Ø40			●			●	●	●	●	●	●	●
Ø50			●			●	●	●	●	●	●	●
Ø63			●			●	●	●	●	●	●	●

Intermediate strokes can be obtained using spacers with defined length (5, 10, 15, 20 mm).
Example: It is possible to obtain a **6100.32.45.B** cylinder from a **6100.32.50.B** cylinder by inserting a spacer with length of 5 mm.
The intermediate strokes manufactured without the use of spacers are considered special executions.

Overall dimensions and technical information are provided solely for informative purposes and may be modified without notice

Overall dimensions

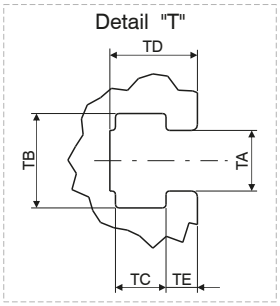

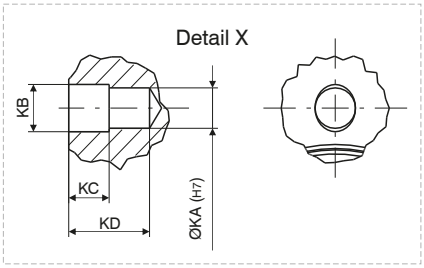

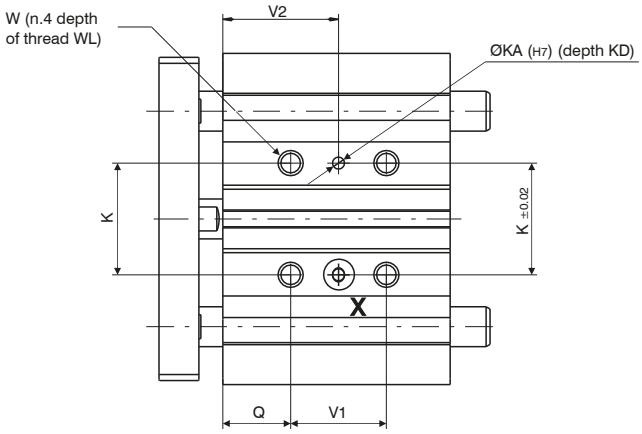

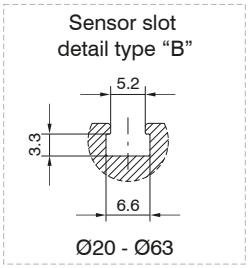

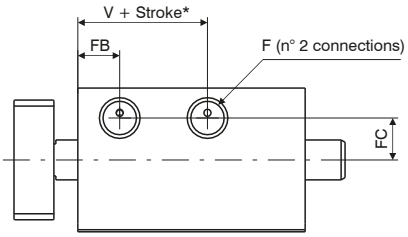

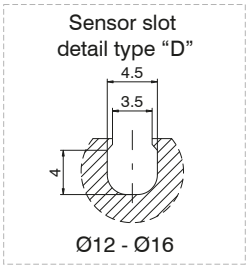

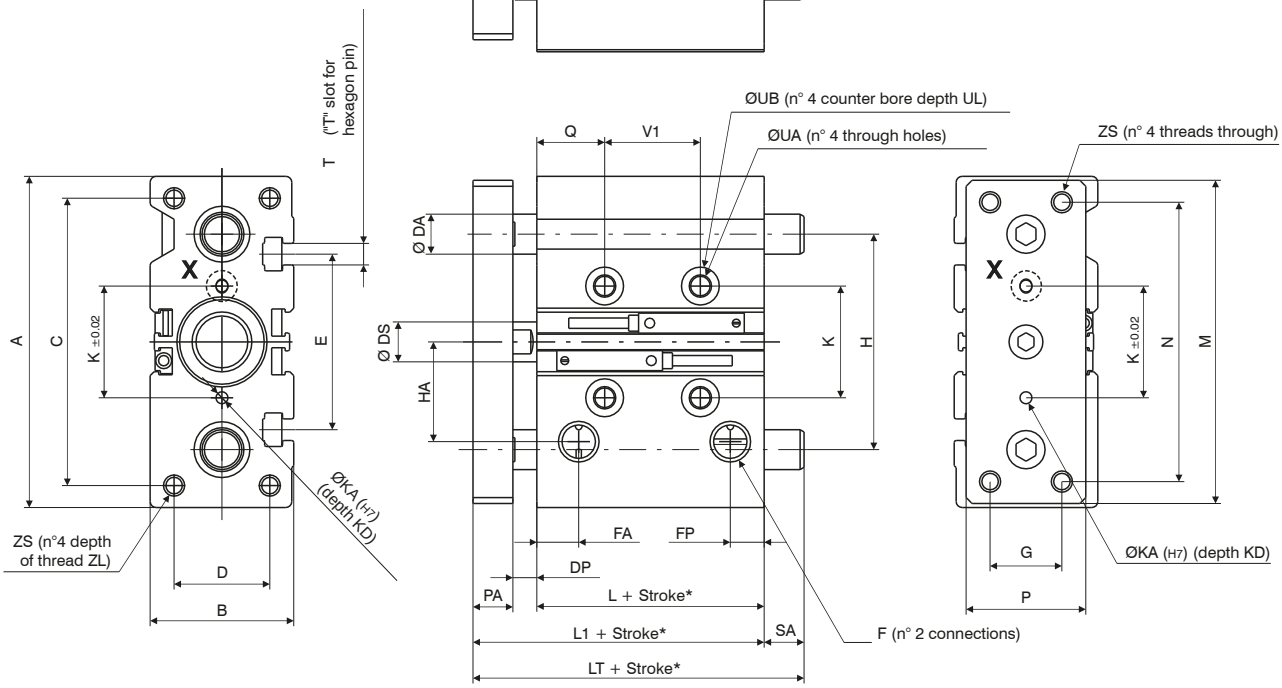

*Dimensions only refer to the "standard stroke"

Overall dimensions and technical information are provided solely for informative purposes and may be modified without notice

Overall dimensions

				Bore	Ø12	Ø16	Ø20	Ø25	Ø32	Ø40	Ø50	Ø63
				Table of dimensions								
				A	58	64	83	93	112	120	148	162
				B	26	30	36	42	48	54	64	78
				C	40	42	72	82	98	106	130	142
				D	18	22	24	30	34	40	46	58
Control unit with bronze bushes				DA	8	10	12	16	20	20	25	25
Control unit with bearing bushes				DA	6	8	10	14	16	16	20	20
				DP	2	2	5,5	5,5	9,5	10	13	13
				DS	6	8	10	12	16	16	20	20
				E	/	/	44	50	63	72	92	110
				F	M5	M5	G1/8"	G1/8"	G1/8"	G1/8"	G1/4"	G1/4"
				FA	11	11	11	12	13	13	13	14
				FB	11	11	11	12	13	13	13	14
				FC	8,5	10	10,5	13,5	15	18	21,5	28
				FP	15	17	9	10,5	9,5	11	11	12,5
				G	14	16	18	26	30	30	40	50
				H	41,5	46	54	64	78	86	110	124
				HA	19,5	23	25	28,5	34	38	47	55
				K	23	24	28	34	42	50	66	80
				KA	/	/	3	4	4	4	5	5
				KB	/	/	3,5	4,5	4,5	4,5	6	6
				KC	/	/	3	3	3	3	4	4
				KD	/	/	6	6	6	6	8	8
				L	29	31	38	38,5	38,5	44	44	49
				L1	39	43	53,5	54	60	66	72	77
Control unit with bronze bushes		stroke	≤50	LT	39	43	53,5	54	97	97	106,5	106,5
Control unit with bronze bushes	50<	stroke	≤200	LT	57	64	84,5	85	102	102	118	118
Control unit with bearing bushes				LT	See table 1							
				M	56	62	81	91	110	118	146	158
				N	48	52	70	78	96	104	130	130
				PA	8	10	10	10	12	12	15	15
				P	22	25	30	38	44	44	60	70
				Q	5	5	17,5	17,5	21,5	22	24	24
Control unit with bronze bushes		stroke	≤50	SA	/	/	/	/	37	31	34,5	29,5
Control unit with bronze bushes	50<	stroke	≤200	SA	18	21	31	31	42	36	46	41
Control unit with bearing bushes				SA	See table 1							
				T	/	/	M5	M5	M6	M6	M8	M10
				TA	/	/	5,4	5,4	6,5	6,5	8,5	11
				TB	/	/	8,4	8,4	10,5	10,5	13,5	17,8
				TC	/	/	4,5	4,5	5,5	5,5	7,5	10
				TD	/	/	7,8	8,2	9,5	11	13,5	18,5
				TE	/	/	2,8	3	3,5	4	4,5	7
				UA	4,3	4,3	5,6	5,6	6,6	6,6	8,6	8,6
				UB	8	8	9,5	9,5	11	11	14	14
				UL	4,5	4,5	5,5	5,5	7,5	7,5	9	9
				V	14	14	13	13	7,5	13	9	14
				V1	See table 2							
				V2	See table 2							
				W	M5	M5	M6x1	M6x1	M8x1,25	M8x1,25	M10x1,5	M10x1,5
				WL	10	10	12	12	16	16	20	20
				Z	M4	M5	M5x0,8	M6x1	M8x1,25	M8x1,25	M10x1,5	M10x1,5
				ZL	9	11	13	15	20	20	22	22

	Table 1	LT			SA		
	Bore	stroke≤30	30<stroke≤100	100<stroke≤200	stroke≤30	30<stroke≤100	100<stroke≤200
Control unit with bearing bushes	Ø12	39	53	53	/	14	/
	Ø16	43	64	64	/	21	/
	Ø20	47	72	72	/	18,5	49
	Ø25	49	77	77	/	23	48
		stroke <50	50≤stroke≤100	100<stroke≤200	stroke <50	50≤stroke≤100	100<stroke≤200
	Ø32	/	87	117	/	27	57
	Ø40	/			/	21	51
	Ø50	/	92	127	/	20	55
	Ø63	/			/	15	50

Table 2	V1			V2		
Bore	stroke≤30	30<stroke≤100	100<stroke≤200	stroke≤30	30<stroke≤100	100<stroke≤200
Ø12	4+stroke			/	/	/
Ø16				/	/	/
Ø20	24	44	120	29,5	39,5	77,5
Ø25						
	stroke≤25	25<stroke≤100	100<stroke≤200	stroke≤25	25<stroke≤100	100<stroke≤200
Ø32	24	48	124	33,5	45,5	83,5
Ø40				34	46	84
Ø50				36	48	86
Ø63	28	52	128	38	50	88

Weight - Cylinder force - kinetic energy

	Bore							
	Ø12	Ø16	Ø20	Ø25	Ø32	Ø40	Ø50	Ø63
Stroke	**Control unit with bronze bushes**							**Weight g**
10	240	330	/	/	/	/	/	/
20	280	380	670	950	/	/	/	/
25	/	/	/	/	1690	1950	3360	4180
30	310	430	750	1050	/	/	/	/
40	350	480	830	1160	/	/	/	/
50	390	530	910	1270	2070	2370	4000	4940
75	500	680	1170	1650	2470	2830	4730	5780
100	5903	800	1370	1920	2850	3250	5370	6540
125	/	/	1570	2190	3240	3680	6010	7290
150	/	/	1760	2470	3620	4100	6650	8050
175	/	/	1960	2740	4000	4530	7290	8800
200	/	/	2160	3010	4380	4950	7930	9560
Stroke	Moving parts							
10	100	155	/	/	/	/	/	/
20	108	170	330	520	/	/	/	/
25	/	/	/	/	1070	1140	2150	2500
30	116	185	350	560	/	/	/	/
40	124	200	380	600	/	/	/	/
50	132	215	400	640	1230	1300	2400	2750
75	152	250	520	840	1420	1490	2750	3090
100	172	285	580	950	1580	1650	3000	3350
125	/	/	640	1050	1740	1810	3260	3600
150	/	/	700	1150	1910	1980	3510	3860
175	/	/	760	1250	2070	2140	3760	4110
200	/	/	820	1350	2230	2300	4020	4360
Stroke	**Control unit with bearing bushes**							
10	240	340	/	/	/	/	/	/
20	270	390	700	980	/	/	/	/
25	/	/	/	/	1540	1790	3110	3930
30	300	430	770	1070	/	/	/	/
40	350	510	890	1250	/	/	/	/
50	390	560	970	1340	1850	2150	3660	4590
75	470	670	1140	1570	2300	2640	4410	5460
100	560	790	1310	1810	2620	3000	4960	6120
125	/	/	1520	2080	2990	3420	5600	6880
150	/	/	1690	2310	3310	3780	6150	7540
175	/	/	1870	2540	3620	4140	6700	8210
200	/	/	2040	2770	3940	4500	7250	8870
Stroke	Moving parts							
10	95	145	/	/	/	/	/	/
20	100	153	310	490	/	/	/	/
25	/	/	/	/	820	890	1770	2110
30	105	161	330	520	/	/	/	/
40	110	169	370	580	/	/	/	/
50	120	177	390	610	940	1010	1950	2300
75	145	197	440	690	1110	1180	2240	2590
100	170	217	480	760	1230	1300	2430	2770
125	/	/	560	880	1410	1480	2710	3050
150	/	/	600	950	1530	1600	2890	3240
175	/	/	650	1020	1650	1720	3080	3420
200	/	/	700	1100	1770	1830	3270	3610

Working pressure																**Cylinder theoretic force (N)**
2 bar	23	17	40	30	63	47	98	76	161	121	251	211	393	330	623	561
3 bar	34	26	60	45	94	71	147	113	241	181	377	317	589	495	935	841
4 bar	45	34	80	60	126	94	196	151	322	241	503	422	785	660	1247	1121
5 bar	57	43	101	76	157	118	246	189	402	302	629	528	982	825	1559	1402
6 bar	68	51	121	91	188	142	295	227	482	362	754	634	1178	989	1870	1682
7 bar	79	60	141	106	220	165	344	265	563	422	880	739	1374	1154	2182	1962
8 bar	90	68	161	121	251	189	393	302	643	482	1006	845	1570	1319	2494	2242
9 bar	102	77	181	136	283	212	442	340	724	543	1131	950	1767	1484	2805	2523
10 bar	113	85	201	151	314	236	491	378	804	603	1257	1056	1963	1649	3117	2803
Piston area	out	in	out	in	out	in	out	in	out	in	out	in	out	in	out	in
(mm^2)	113	85	201	151	314	236	491	378	804	603	1257	1056	1963	1649	3117	2803

								Maximum permissible Momentum
J	0,08	0,09	0,11	0,18	0,29	0,52	0,91	1,54

How to calculate the Momentum: $\mathbf{Ec} = \frac{1}{2}\ \mathbf{m}\ \mathbf{V}^2$ (J)

m = Total moving mass: weight of driven object added to weight of cylinder moving parts (kg)
V = max. speed: equal to average speed + 40% (m/sec)

Overall dimensions and technical information are provided solely for informative purposes and may be modified without notice

Operating criteria

Permissible lateral load (applied on overall plate)

		Bore							
		Ø12	Ø16	Ø20	Ø25	Ø32	Ø40	Ø50	Ø63
Version	**Stroke**	**Permissible lateral load (N)***							
Control unit with bronze bushes	10	30	48						
	20	23	37	49	69				
	25					203	203	296	296
	30	19	30	43	60				
	40	16	25	38	54				
	50	14	20	35	49	164	164	245	245
	75	12	18	87	116	182	182	273	273
	100	10	15	75	100	159	159	241	241
	125			66	88	142	142	216	216
	150			59	79	127	127	195	195
	175			54	71	116	116	179	179
	200			49	65	106	106	164	164
Control unit with bearing bushes	10	20	35						
	20	15	28	58	69				
	25					191	190	208	206
	30	13	22	48	68				
	40	11	18	101	132				
	50	10	16	90	118	157	157	173	171
	75	8	14	70	93	164	163	223	221
	100	6	11	58	77	144	144	199	196
	125			62	80	203	203	264	262
	150			54	70	186	185	242	240
	175			48	62	171	171	224	221
	200			43	55	158	158	207	205
Version	**Stroke**	**Recommended torque moments (Nm)**							
Control unit with bronze bushes	10	0,40	0,70						
	20	0,35	0,65	1,1	1,8				
	25					6,4	7,0	13,0	14,7
	30	0,28	0,48	0,9	1,6				
	40	0,25	0,45	0,8	1,4				
	50	0,21	0,39	0,8	1,3	5,1	5,7	10,8	12,1
	75	0,42	0,68	1,9	3,0	5,7	6,3	12,0	13,5
	100	0,40	0,60	1,6	2,6	5,0	5,5	10,6	11,9
	125			1,4	2,3	4,4	4,9	9,5	10,7
	150			1,3	2,0	4,0	4,4	8,6	9,7
	175			1,2	1,8	3,6	4,0	7,9	8,9
	200			1,1	1,7	3,3	3,7	7,2	8,2
Control unit with bearing bushes	10	0,62	0,70						
	20	0,41	0,65	1,3	2,1				
	25					6,0	6,6	9,2	10,2
	30	0,33	0,48	1,0	1,8				
	40	0,30	0,45	2,2	3,4				
	50	0,48	0,39	1,9	3,0	4,9	5,4	7,6	8,5
	75	0,38	0,68	1,5	2,4	5,1	5,6	9,8	11,0
	100	0,32	0,60	1,3	2,0	4,5	5,0	8,7	9,7
	125			1,3	2,1	6,3	7,0	11,6	13,0
	150			1,2	1,8	5,8	6,4	10,7	11,9
	175			1,0	1,6	5,3	5,9	9,8	11,0
	200			0,9	1,4	4,9	5,4	9,1	10,2

*(Applied on overall plate)

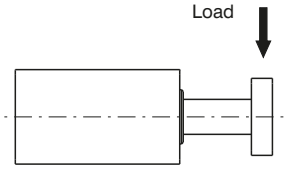

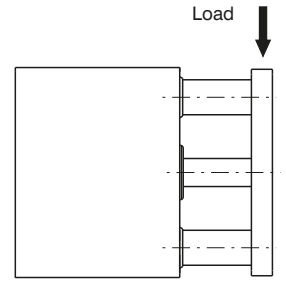

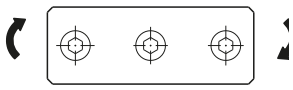

Operating criteria

Stopper device applications

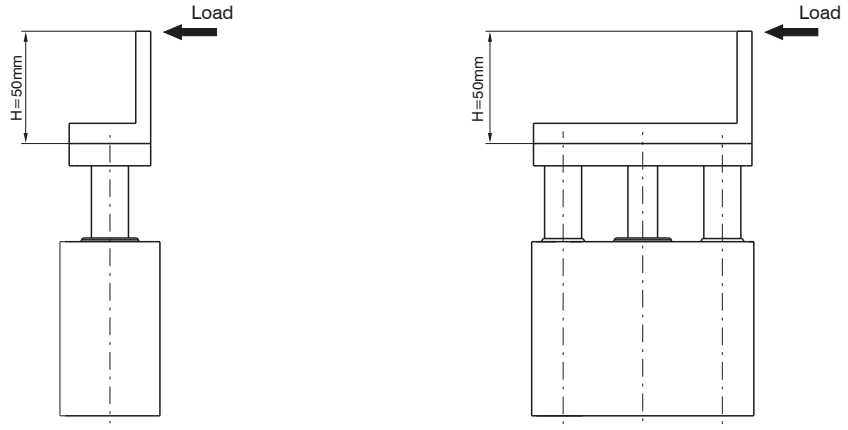

Control unit with bronze bushes

ATTENTION: if H>50 mm use larger bore

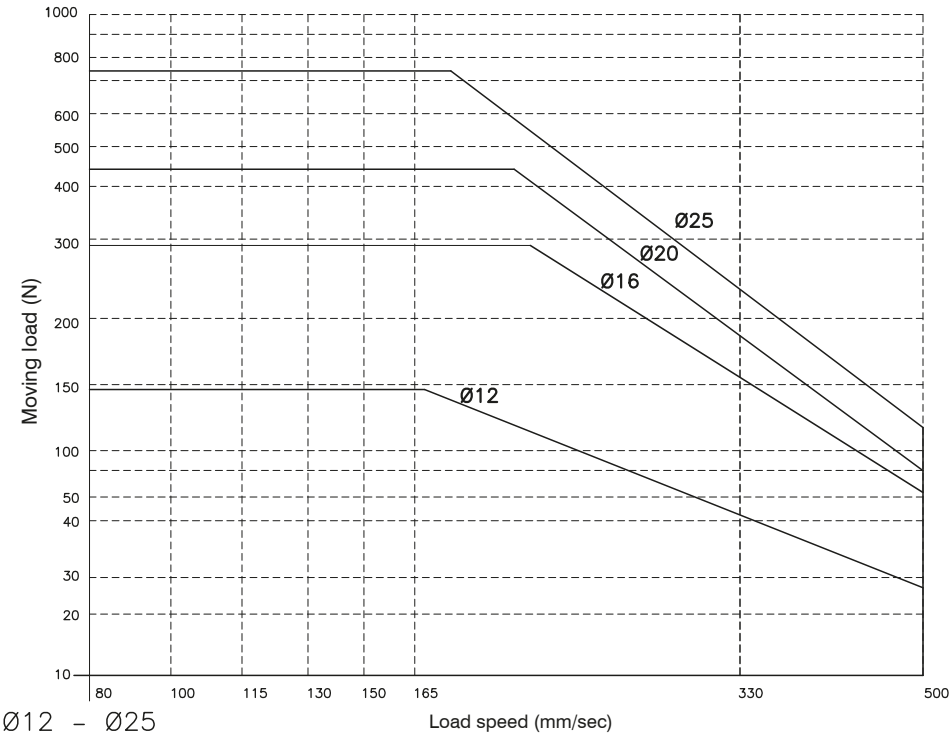

Ø12 – Ø25

ATTENTION: use with stroke £ 30 mm

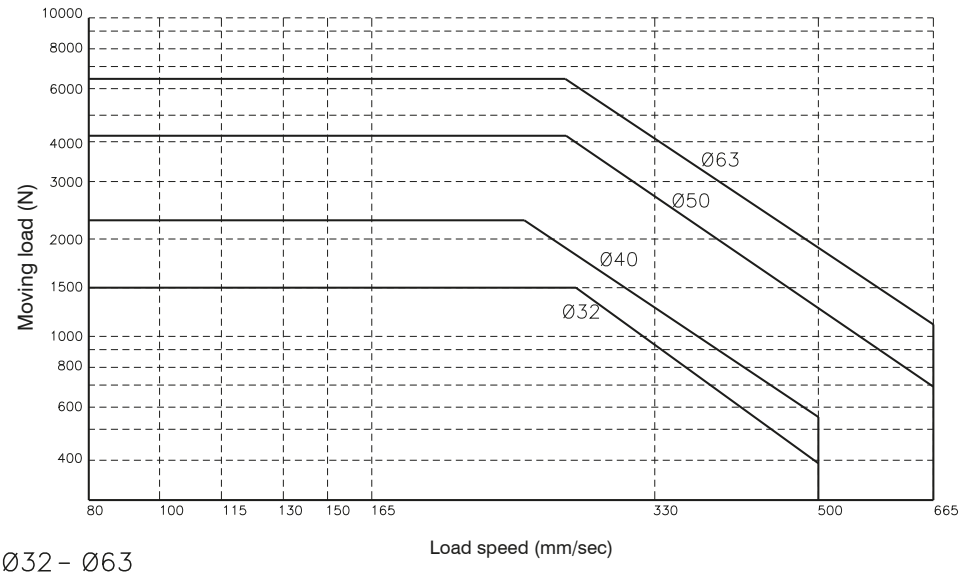

Ø32 – Ø63

ATTENTION: use with stroke £ 50 mm

Overall dimensions and technical information are provided solely for informative purposes and may be modified without notice

Operating criteria

Handling applications

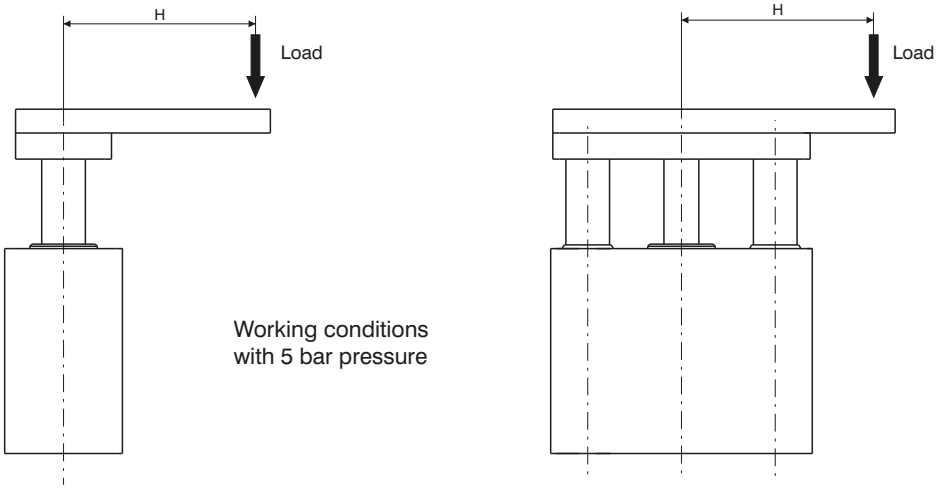

Control unit with bronze bushes

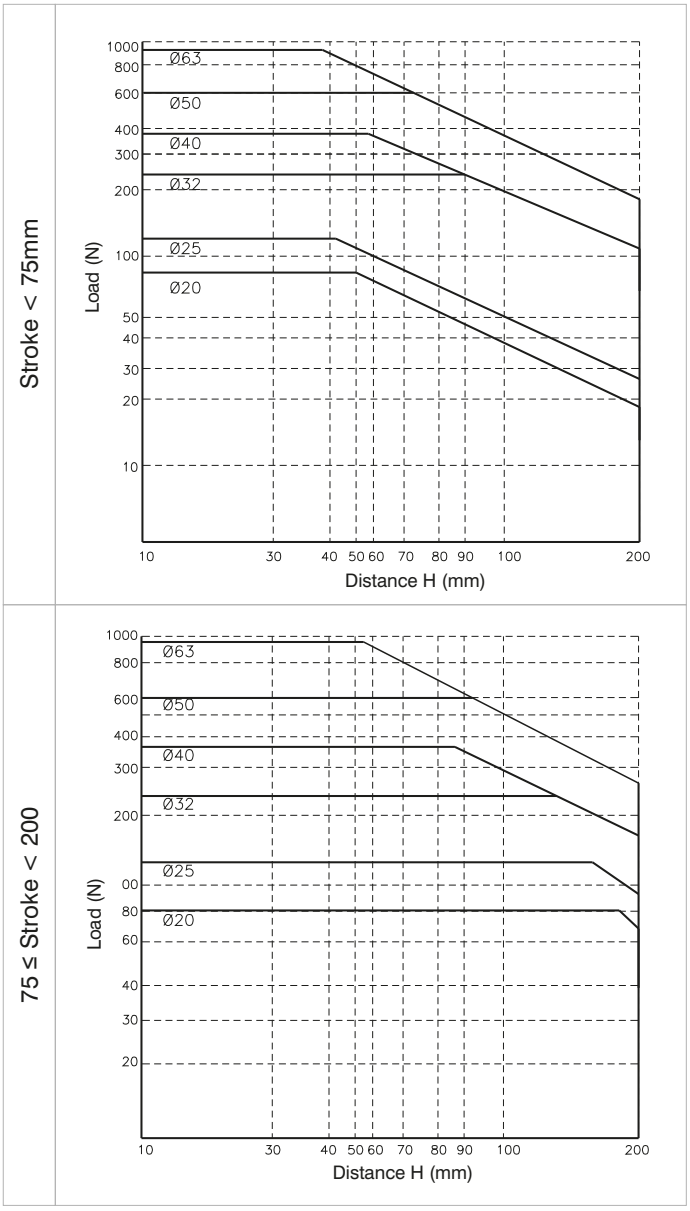

Operating criteria

Handling applications

Control unit with bearing bushes

Ø20 – Ø25		Ø32 - Ø63	
Stroke < 40 mm	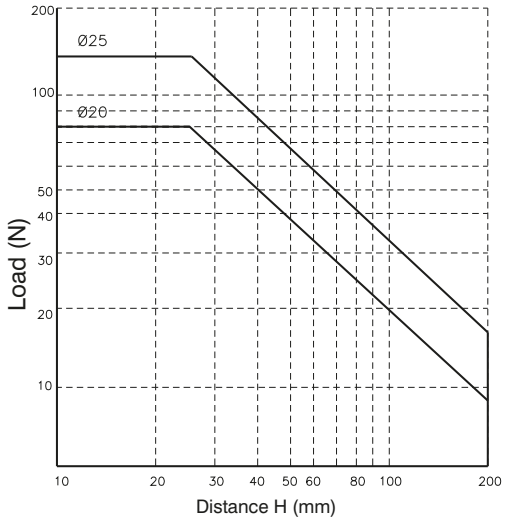	Stroke < 75 mm	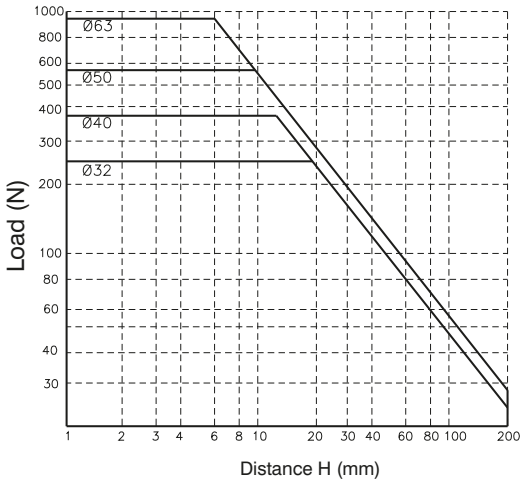
40 < Stroke < 125 mm	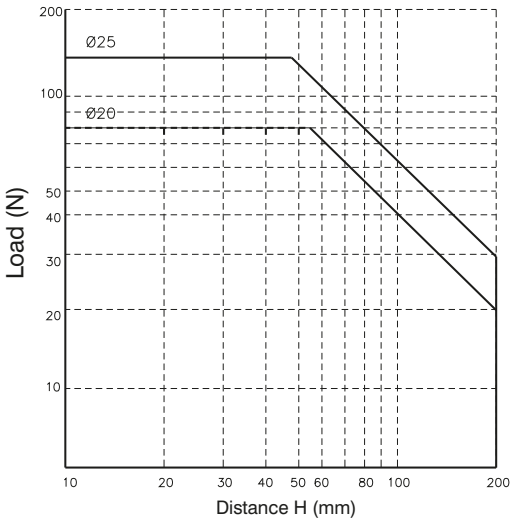	75 < Stroke < 125 mm	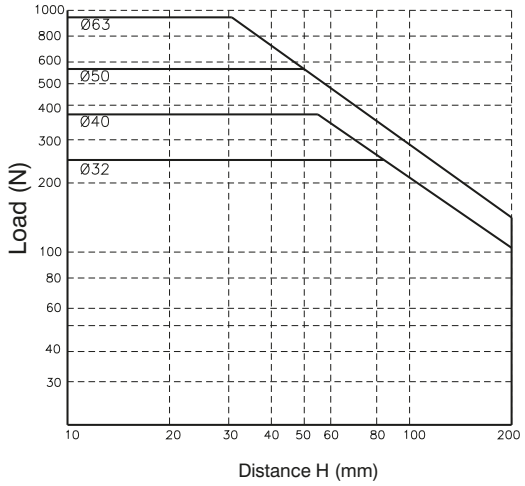
125 ≤ Stroke < 200 mm	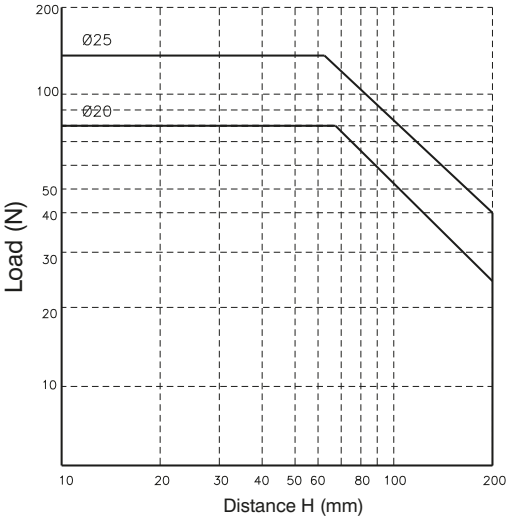	125 ≤ Stroke < 200 mm	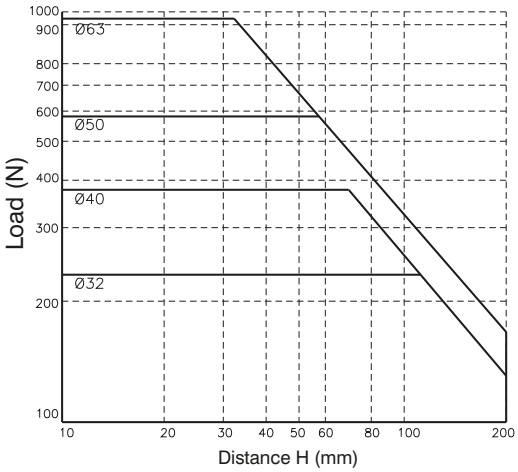

Overall dimensions and technical information are provided solely for informative purposes and may be modified without notice

Heavy duty guided short stroke cylinder

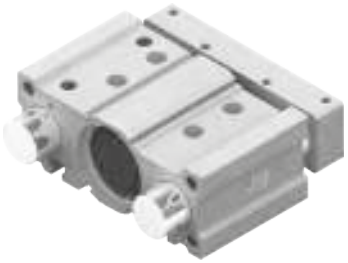

Ordering code

6101.80.stroke. B . _

Side supply ports closed
L = Top supply ports closed

Construction characteristics

Body	anodised aluminium
Rods	C43 chromed steel
Piston	aluminium
Piston rod	C43 chromed steel
Piston rod bushing	sintered bronze
Rod bushing	teflon coated bush
End cap	aluminium
Piston seal	NBR oil-resistant rubber
Piston rod seal	PUR
Plate	anodised aluminium

Operational characteristics

Function	double acting
Fluid	Filtered air. No lubrication needed, if applied it shall be continuous.
Max. pressure	max. 10 bar
Working temperature	-5°C - +70°C
Cushioning	elastic bumper on both ends

Standard strokes

	Stroke							
Bore	25	50	75	100	125	150	175	200
Ø80	●	●	●	●	●	●	●	●

Intermediate strokes can be obtained by adding specific spacers (5, 10, 15, 20mm).
Example: It is possible to obtain a **6101.80.45.B** cylinder from a **6101.80.50.B** cylinder by adding a 5mm spacer.
The Intermediate strokes manufactured without the use of spacers are considered special executions.

Overall dimensions

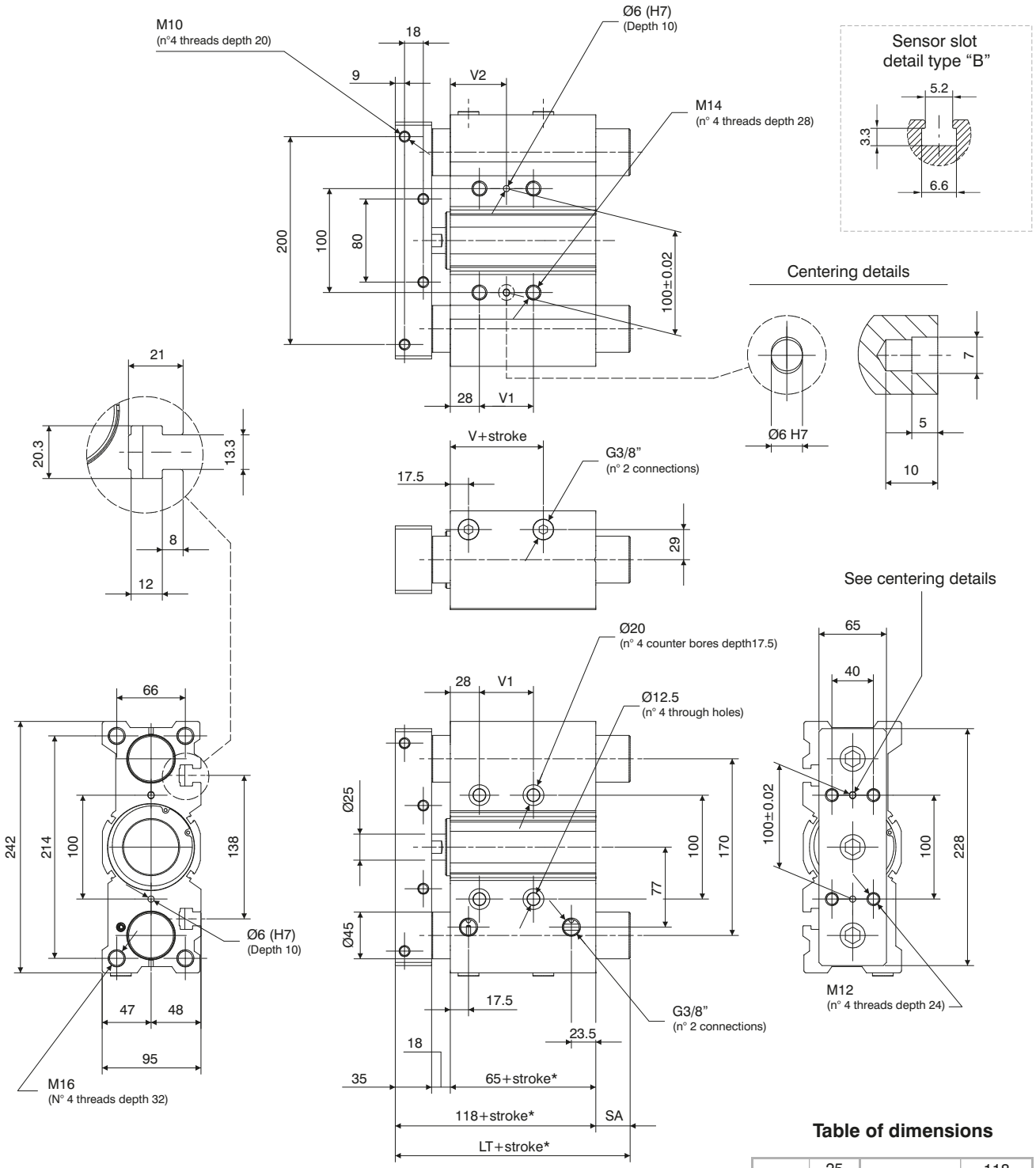

*Dimensions only refer to the "standard stroke"

Table of dimensions

	25	LT	118
stroke	50		118
	> 50		151
		V	14.5
	25	V1	28
	50		52
stroke	75		52
	100		52
	>100		128
	25	V2	42
	50		54
stroke	75		54
	100		54
	>100		92
	25	SA	0
stroke	50		
	> 50		33

Overall dimensions and technical information are provided solely for informative purposes and may be modified without notice

Operating criteria

Cylinder theoretic force (N)

Working pressure		
2 bar	1005	907
3 bar	1508	1361
4 bar	2011	1814
5 bar	2513	2268
6 bar	3016	2721
7 bar	3519	3175
8 bar	4021	3629
9 bar	4524	4082
10 bar	5027	4536
Effective area (mm^2)	out	in
	5027	4536

Recommended torque moments

Stroke	N/m
25	49
50	41
75	51
100	45
125	41
150	38
175	35
200	32

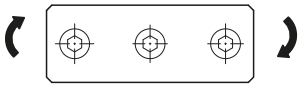

"Stopper" device applications

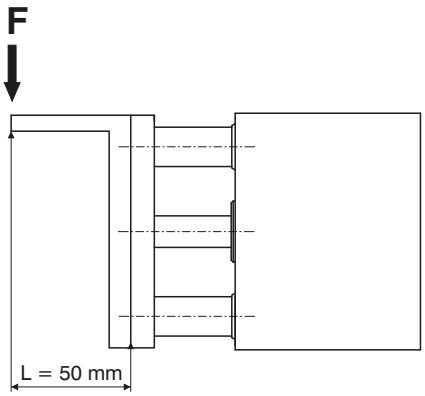

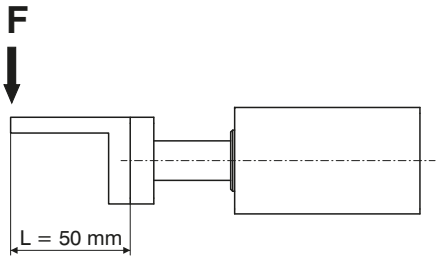

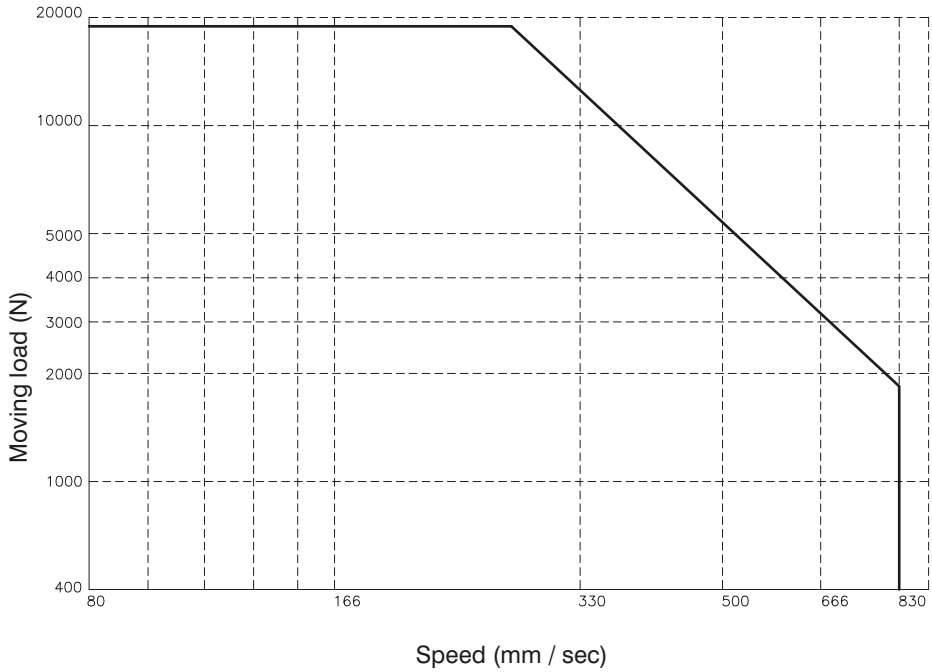

ATTENTION : max stroke 50 mm

Operating criteria

Handling applications

VERTICAL assembly position

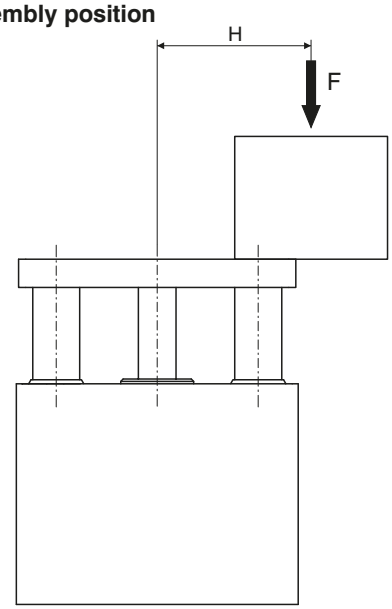

HORIZONTAL assembly position

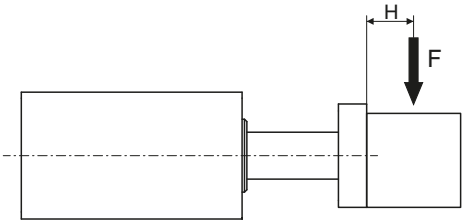

STROKE ≤ 50 mm / V = 200 mm/s

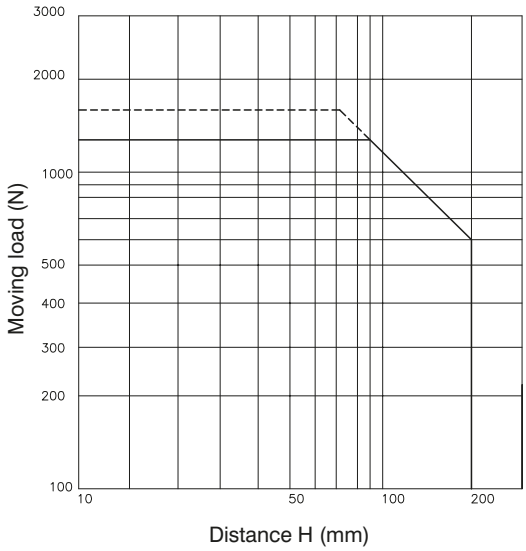

H= 50 mm / V = 200 mm/s

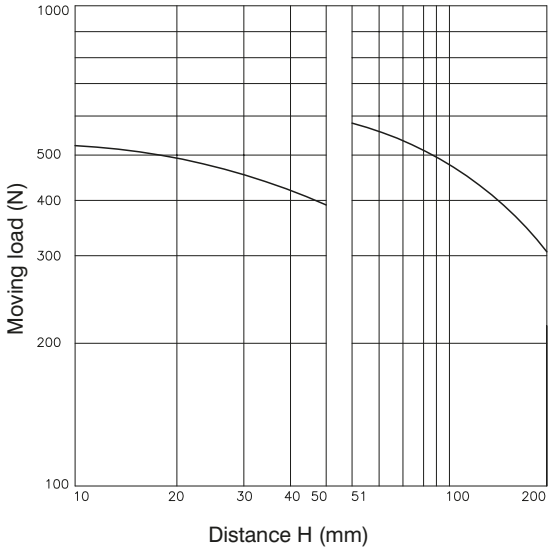

STROKE > 50 mm / V = 200 mm/s

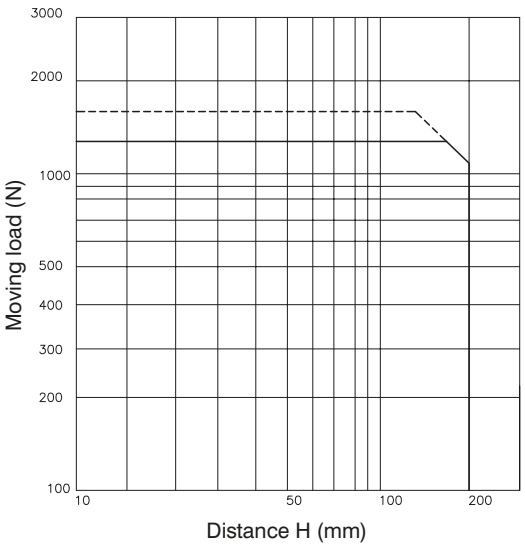

H= 100 mm / V = 200 mm/s

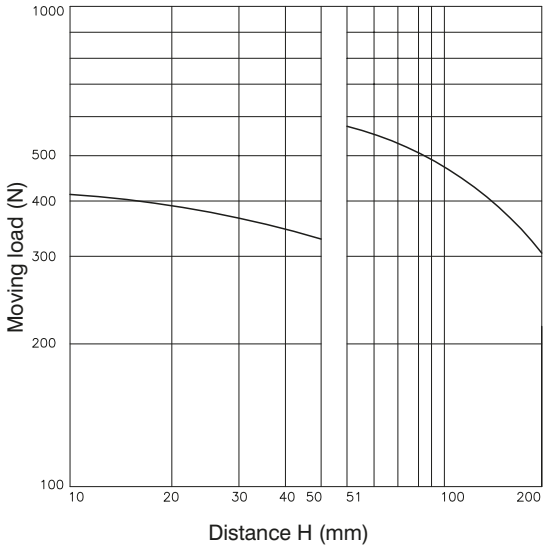

——— Working pressure : 4 bar
- - - - Working pressure : 5 bar

Overall dimensions and technical information are provided solely for informative purposes and may be modified without notice

Guided compact cylinder with additional metal rod scrapers

Ordering code

6110.Ø.stroke. C . _

- **32**
- **40**
- **50**
- **63**

- Side supply ports closed
- **L** = Top supply ports closed

Construction characteristics

Body	anodised aluminium
Guide rods	tempered and chromed steel
Piston	aluminium
Piston rod	C43 chromed steel
Rods bushing	bearing bushing
End cap	anodised aluminium
Piston seal	oil resistant NBR rubber
Piston rod seal	PUR
External rod scraper	brass
Internal rod scraper	NBR
Plate	nickel plated steel

The cylinders are equipped with 4 rod scrapers on the guide rods and 1 rod scraper on the central piston rod

Operational characteristics

Function	double acting
Fluid	Filtered air. No lubrication needed, if applied it shall be continuous.
Working pressure	max. 10 bar
Working temperature	-5°C - +70°C
Cushioning	elastic bumper on both ends

Standard strokes

	Stroke									
Bore	**10**	**20**	**25**	**50**	**75**	**100**	**125**	**150**	**175**	**200**
Ø32			●	●	●	●	●	●	●	●
Ø40			●	●	●	●	●	●	●	●
Ø50			●	●	●	●	●	●	●	●
Ø63			●	●	●	●	●	●	●	●

Intermediate strokes can be obtained using spacers with defined length (5, 10, 15, 20 mm).
Example: It is possible to obtain a **6110.32.45.B** cylinder from a **6110.32.50.B** cylinder by inserting a spacer with length of 5 mm.
The intermediate strokes manufactured without the use of spacers are considered special executions.

Overall dimensions and technical information are provided solely for informative purposes and may be modified without notice

Overall dimensions

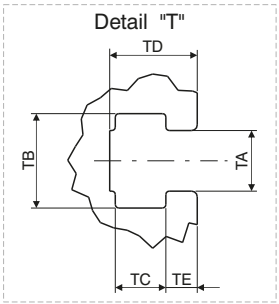

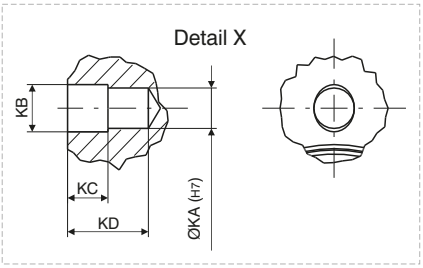

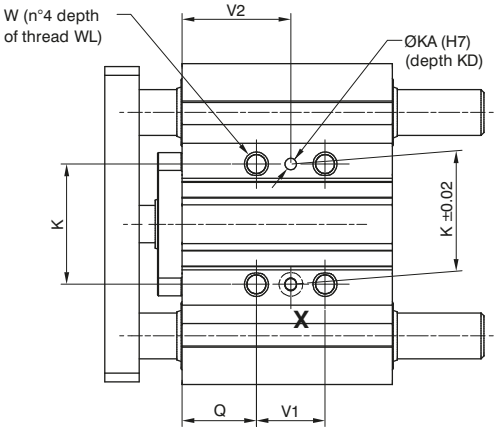

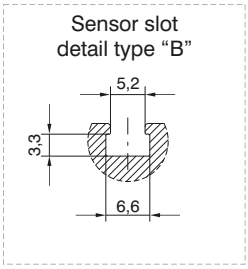

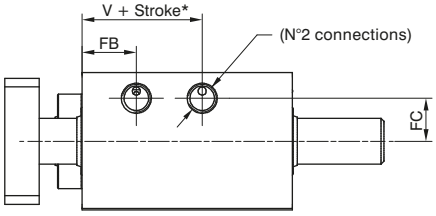

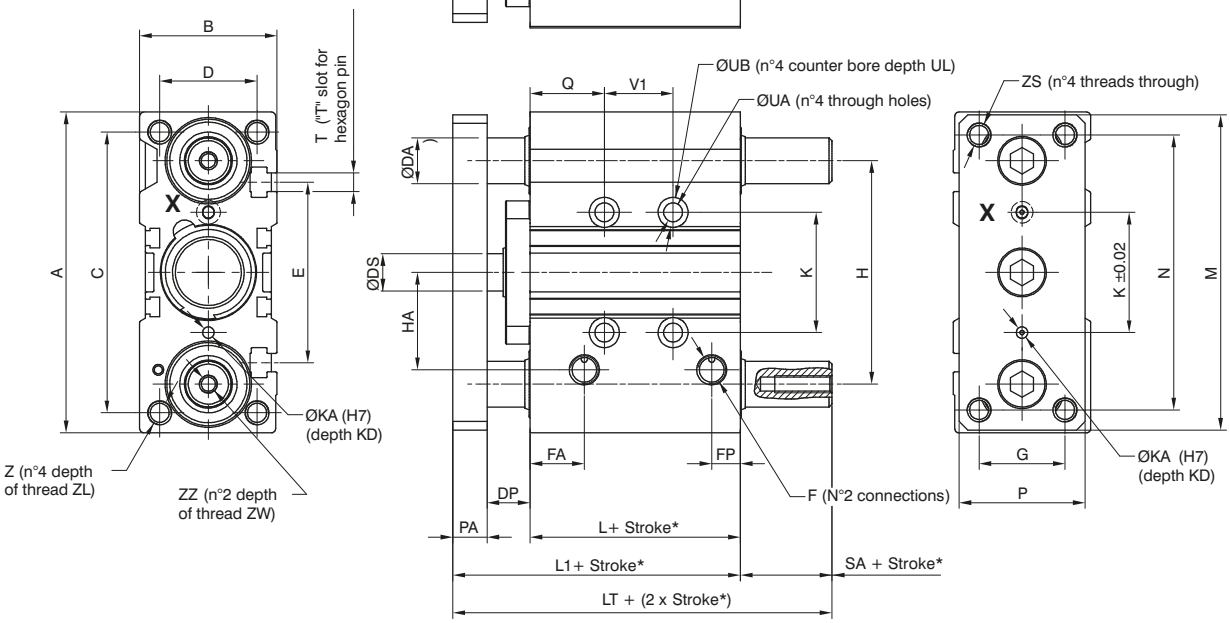

Overall dimensions and technical information are provided solely for informative purposes and may be modified without notice

Overall dimensions

Bore	Ø32	Ø40	Ø50	Ø63
Table of dimensions				
A	112	120	148	162
B	48	54	64	78
C	98	106	130	142
D	34	40	46	58
DA	16	16	20	20
DP	15	20	23	23
DS	16	16	20	20
E	63	72	92	110
F	G1/8"	G1/8"	G1/4"	G1/4"
FA	19	13	13	14
FB	19	13	13	14
FC	15	18	21,5	28
FP	10	11	11	12,5
G	30	30	40	50
H	78	86	110	124
HA	34	38	47	55
K	42	50	66	80
KA	4	4	5	5
KB	4,5	4,5	6	6
KC	3	3	4	4
KD	6	6	8	8
L	48,5	50	50	55
L1	75,5	82	88	93
LT	82,5	89	93	100
M	110	118	146	158
N	96	104	130	130
PA	12	12	15	15
P	44	44	60	70
Q	26	22	24	24
SA	7	7	5	7
T	M6	M6	M8	M10
TA	6,5	6,5	8,5	11
TB	10,5	10,5	13,5	17,8
TC	5,5	5,5	7,5	10
TD	9,5	11	13,5	18,5
TE	3,5	4	4,5	7
UA	6,6	6,6	8,6	8,6
UB	11	11	14	14
UL	7,5	7,5	9	9
V	17	19	15	20
V1	See table 1			
V2				
W	M8x1,25	M8x1,25	M10x1,5	M10x1,5
WL	16	16	20	20
Z	M8x1,25	M8x1,25	M10x1,5	M10x1,5
ZL	20	20	22	22
ZS	M8x1,25	M8x1,25	M10x1,5	M10x1,5
ZZ	M6	M8	M10	M10
ZW	20	20	25	25

Table 1	V1			V2		
Bore	stroke≤25	25<stroke≤100	100<stroke≤200	stroke≤25	25<stroke≤100	100<stroke≤200
Ø32	24	48	124	38	50	88
Ø40				34	46	84
Ø50				36	48	86
Ø63	28	52	128	38	50	88

Slide cylinders

Ordering code

6600.Ø.stroke. _ . _

- **8**
- **12**
- **16**
- **20**
- **25**

- = Without accessories
- **A** = Double regulation end stroke
- **AU** = Regulation front end stroke
- **AR** = Regulation rear end stroke
- **D** = Double shock absorber
- **DU** = Front shock absorber
- **DR** = Rear shock absorber

Construction characteristics

Body	anodised aluminium
Piston rod	stainless steel
Piston	stainless steel
Piston rod bushing	sintered bronze
End cap	anodised aluminium
Cushioning washer	PUR
Seal	oil resistant NBR rubber
Flange	anodised aluminium
Upper plate	anodised aluminium

Operational characteristics

Fluid	Filtered air. No lubrication needed, if applied it shall be continuous.
Working pressure	1.5 - 7 bar
Working temperature	-5°C - +70°C
Cushioning	with elastic bumper

Theoretical force

Bore	Effective area (mm²)	Force (N)						
Ø8	Out	101	20	30	40	51	61	71
	In	75	15	23	30	38	45	53
Ø12	Out	226	45	68	90	113	136	158
	In	170	34	51	68	85	102	119
Ø16	Out	402	80	121	161	201	241	281
	In	302	60	91	121	151	181	211
Ø20	Out	628	126	188	251	314	377	440
	In	471	94	141	188	236	283	330
Ø25	Out	982	196	295	393	491	589	687
	In	756	151	227	302	378	454	529
			2	3	4	5	6	7
			Working pressure(bar)					

Standard strokes

	Stroke								
Bore	10	20	30	40	50	75	100	125	150
Ø8	●	●	●	●	●	●			
Ø12	●	●	●	●	●	●	●		
Ø16	●	●	●	●	●	●	●	●	
Ø20	●	●	●	●	●	●	●	●	●
Ø25	●	●	●	●	●	●	●	●	●

Overall dimensions and technical information are provided solely for informative purposes and may be modified without notice

Overall dimensions Ø8

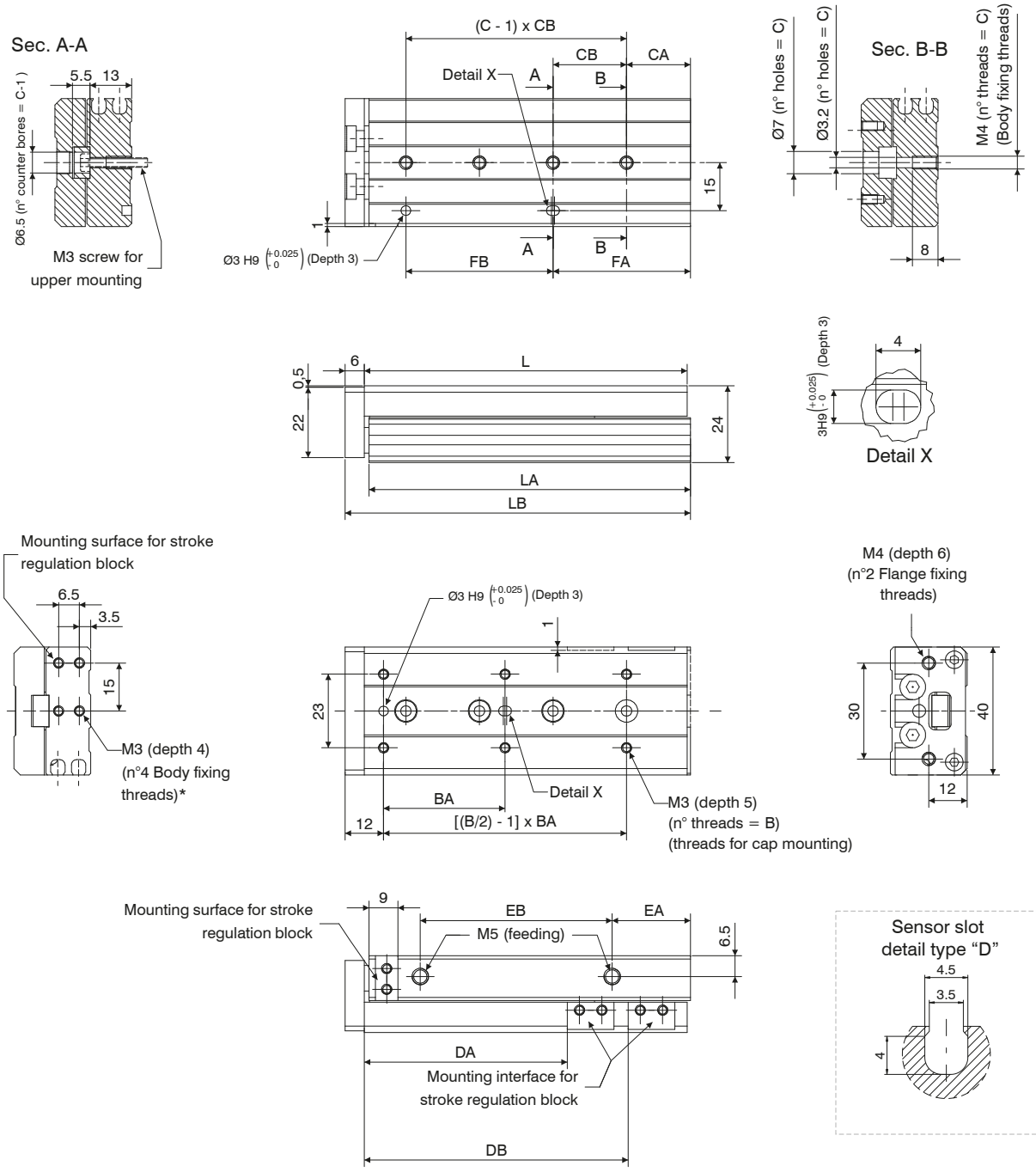

Table of dimensions

	Standard stroke					
	10	**20**	**30**	**40**	**50**	**75**
B	4	4	4	4	6	6
BA	25	25	40	50	38	50
C	2	2	3	3	4	5
CA	9	12	13	15	20	27
CB	28	30	20	28	23	28
DA	23,5	33,5	43,5	53,5	63,5	88,5
DB	/	/	/	/	82,5	132,5
FA	17	12	33	43	43	83
FB	20	30	20	28	46	56
EA	13	8,5	9,5	10,5	24,5	38,5
EB	19,5	29	39	56	60	96
L	49	54	65	83	101	151
LA	48,5	53,5	64,5	82,5	100,5	150,5
LB	56	61	72	90	108	158
Weight g	150	160	190	235	285	410

Overall dimensions Ø12

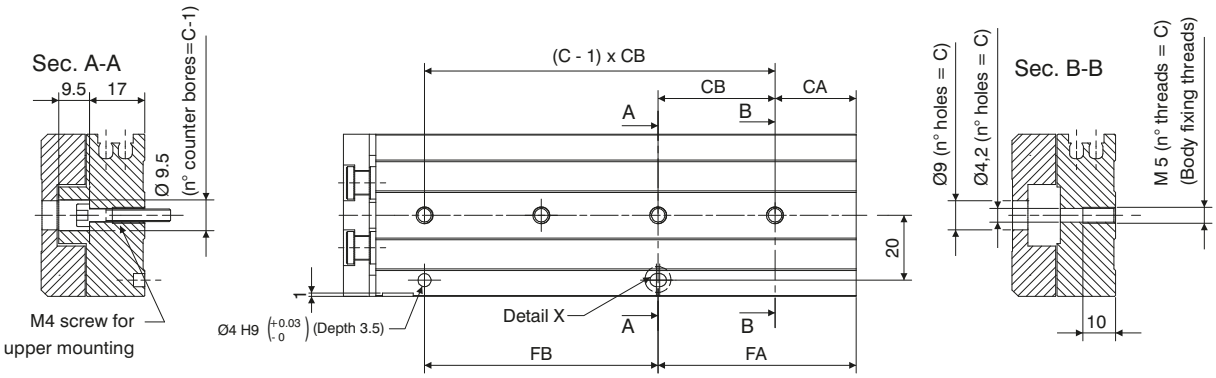

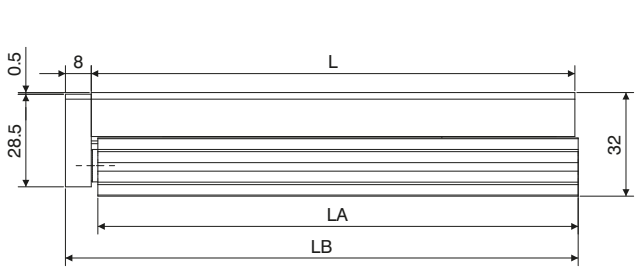

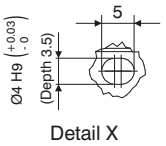

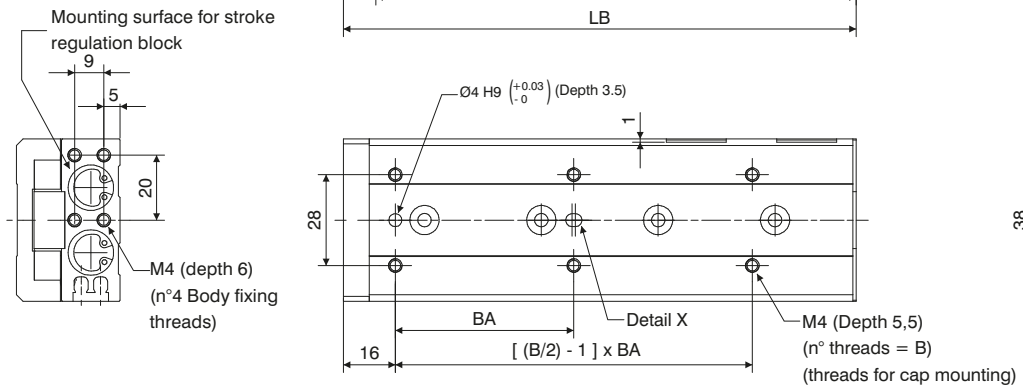

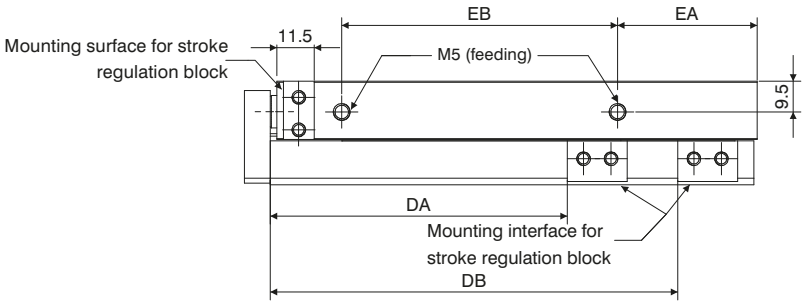

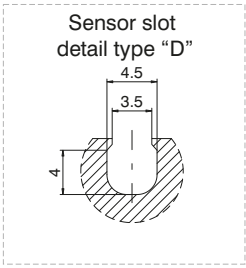

Table of dimensions

	Standard stroke						
	10	20	30	40	50	75	100
B	4				6		
BA		35		50	35	55	65
C		2		3	3	4	5
CA		15		17	15	25	35
CB		40		25	36	36	38
DA	26,5	36,5	46,5	56,5	66,5	91,5	116,5
DB	/	/	/	/	/	125,5	179,5
FA		15		42	51	61	111
FB		40		25	36	72	76
EA	10				22	43	52
EB		40		52	60	85	130
L		71		83	103	149	203
LA		70		82	102	148	202
LB		80		92	112	158	212
Weight (gr.)		325		385	480	660	890

Overall dimensions and technical information are provided solely for informative purposes and may be modified without notice

Overall dimensions Ø16

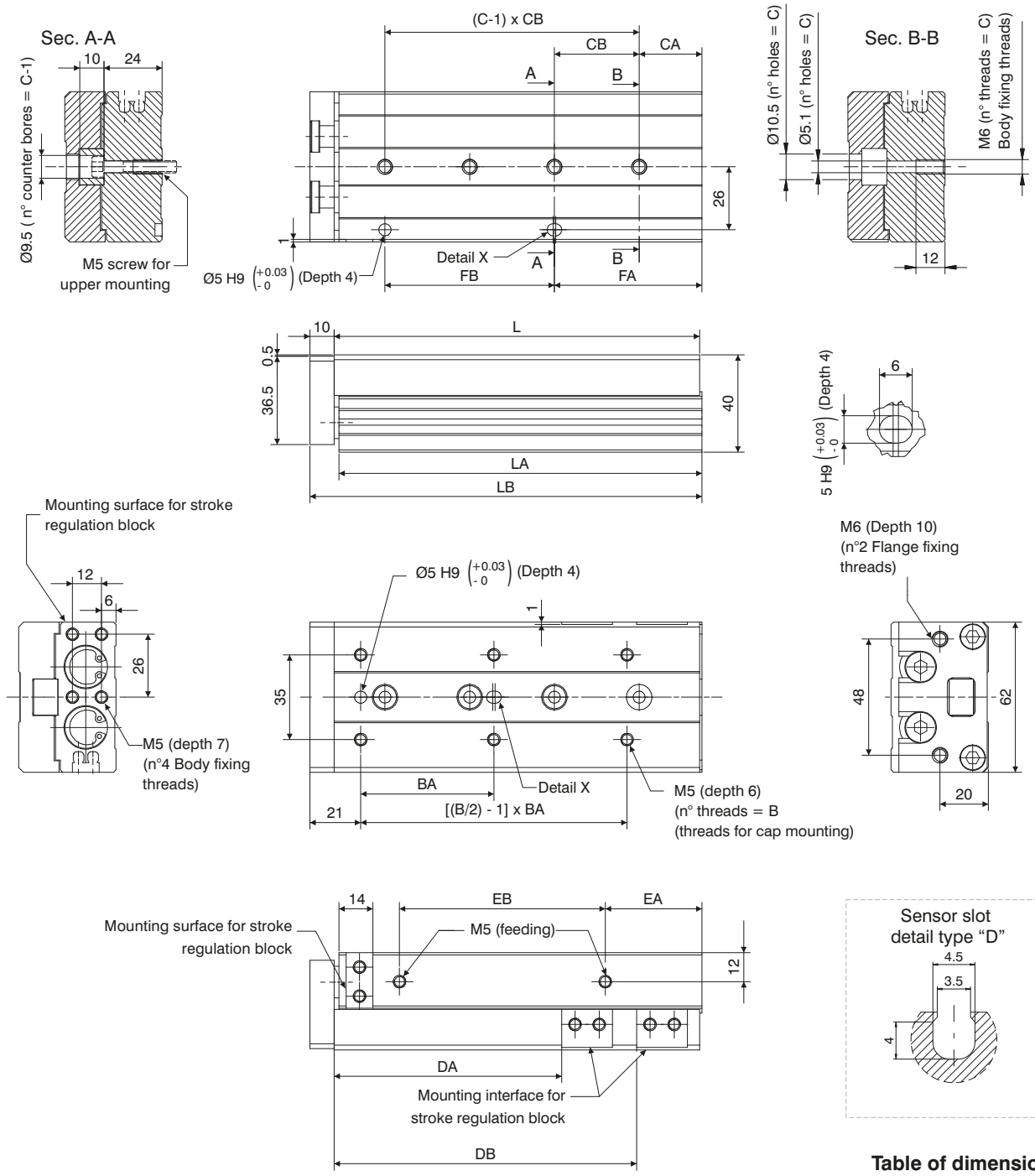

Table of dimensions

	Standard stroke							
	10	**20**	**30**	**40**	**50**	**75**	**100**	**125**
B	4	4	4	4	6	6	6	8
BA	35	35	35	40	30	55	65	70
C	2	2	2	2	3	4	5	7
CA	16	16	16	16	21	26	39	19
CB	40	40	40	50	30	35	35	35
DA	29	39	49	59	69	94	119	144
DB	/	/	/	/	/	125	173	223
FA	16	16	16	16	51	61	109	159
FB	40	40	40	50	30	70	70	70
EA	10	10	10	10	15	40	55	68
EB	40	40	40	50	60	85	118	155
L	76	76	76	86	101	151	199	249
LA	75	75	75	85	100	150	198	248
LB	87	87	87	97	112	162	210	260
Weight (gr.)	570	570	580	640	760	1090	1370	1700

Overall dimensions Ø20

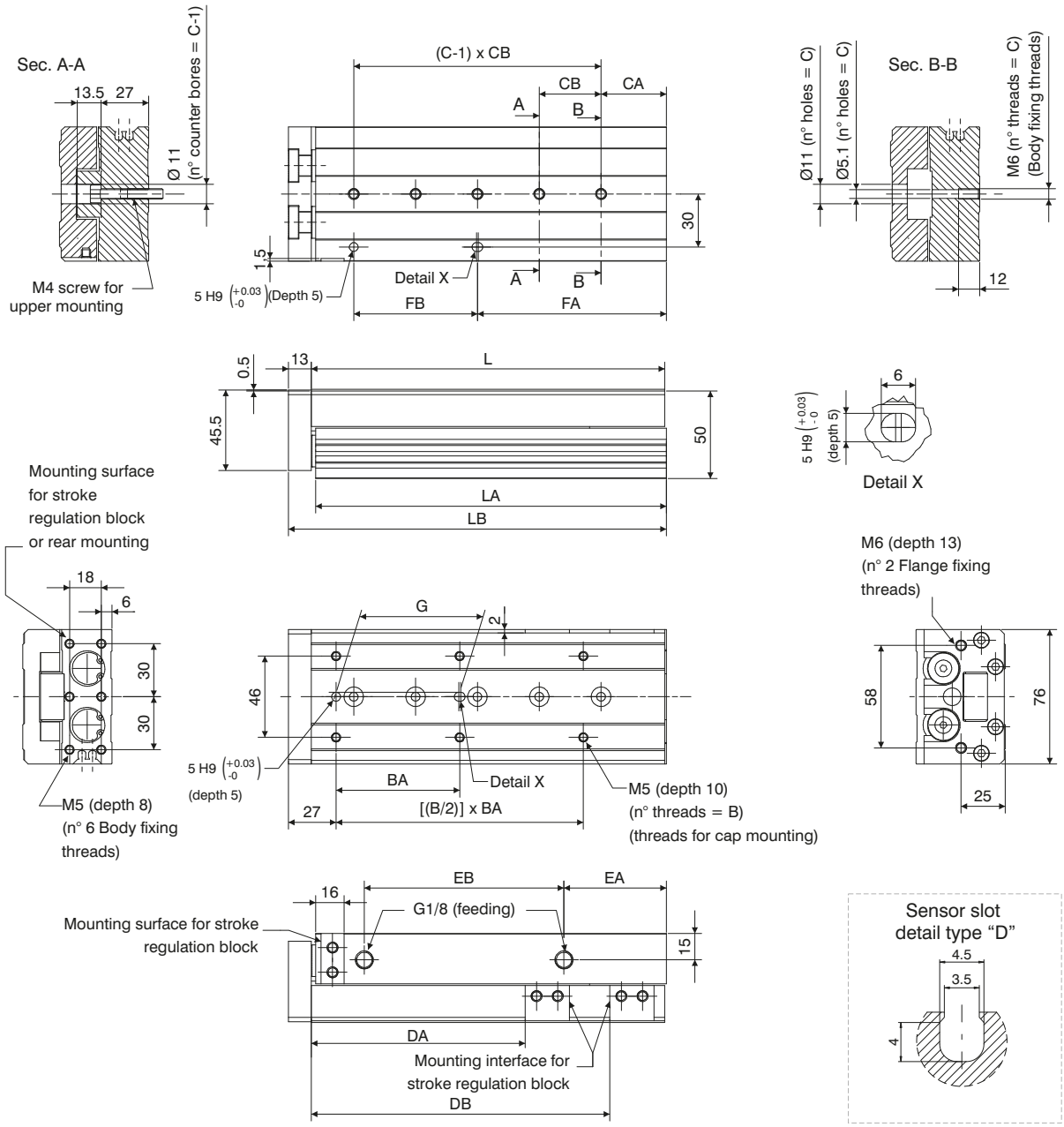

Table of dimensions

	Standard stroke								
	10	**20**	**30**	**40**	**50**	**75**	**100**	**125**	**150**
B	4	4	4	4	6	6	6	8	8
BA	50	50	50	60	35	60	70	70	80
C	2	2	2	2	3	4	5	6	7
CA	15	15	15	15	15	19	37	41	19
CB	45	45	45	55	35	35	35	38	44
DA	31	41	51	61	71	96	121	146	171
DB	/	/	/	/	/	/	169	223	275
EA	10	10	10	10	10	10	58	70	87
EB	44	44	44	54	69	108	113	155	190
FA	25	25	25	35	50	54	107	155	195
FB	35	35	35	35	35	70	70	76	88
G	40	40	40	50	35	60	70	70	80
L	83	83	83	93	108	147	200	254	306
LA	81,5	81,5	81,5	91,5	106,5	145,5	198,5	252,5	304,5
LB	97	97	97	107	122	161	214	268	320
Weight (gr.)	960	980	1010	1100	1250	1630	2150	2670	3190

Overall dimensions and technical information are provided solely for informative purposes and may be modified without notice

Overall dimensions Ø25

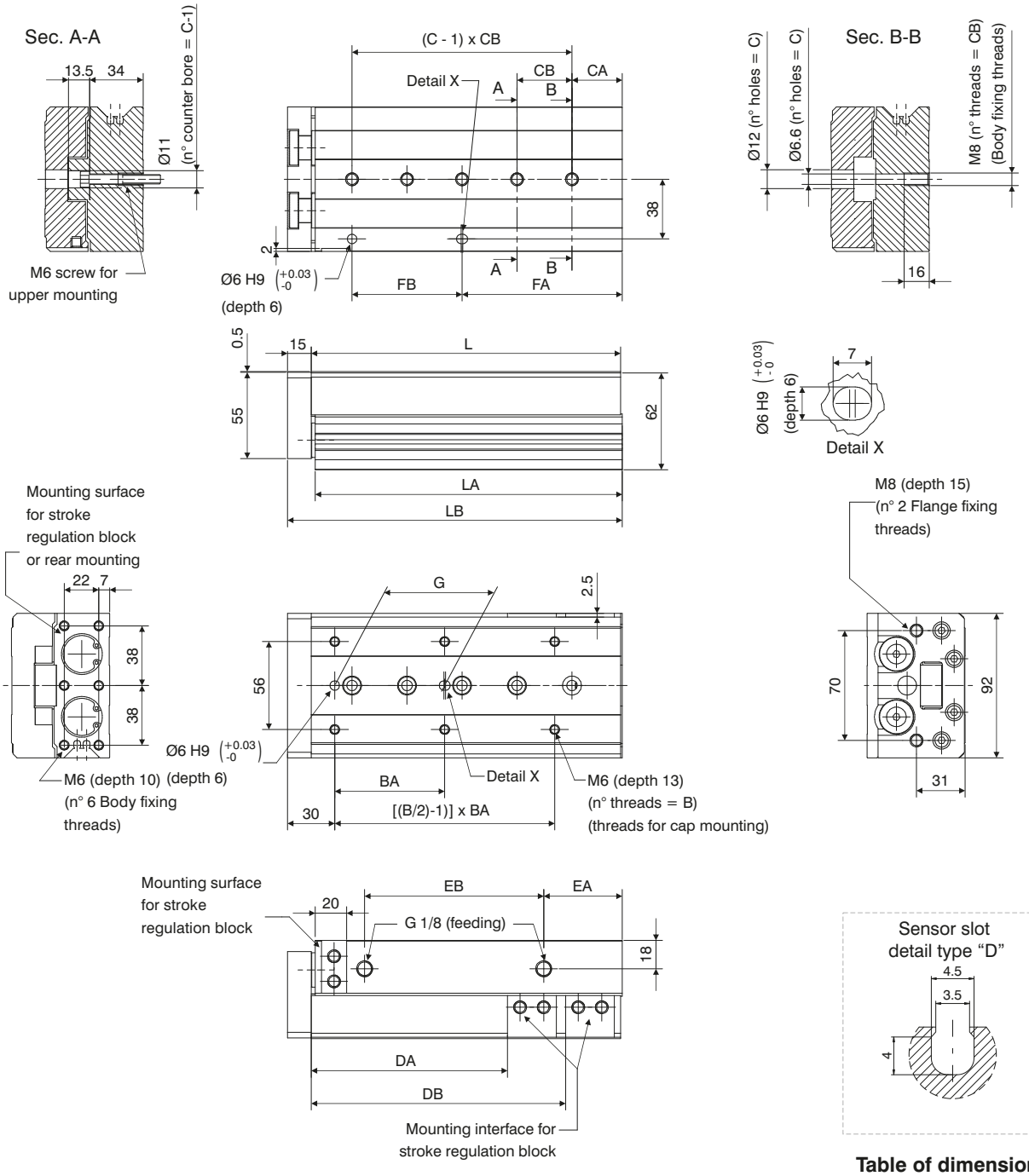

Table of dimensions

	Standard stroke								
	10	**20**	**30**	**40**	**50**	**75**	**100**	**125**	**150**
B	4	4	4	4	6	6	6	8	8
BA	50	50	50	60	35	60	70	75	80
C	2	2	2	2	3	4	5	6	7
CA	22	22	22	22	20	26	32	40	30
CB	45	45	45	55	35	35	35	38	40
DA	35	45	55	65	75	100	125	150	175
DB	/	/	/	/	/	/	162	218	258
EA	12	12	12	12	12	33	50	67	82
EB	47	47	47	57	70	90	114	155	180
FA	22	22	22	22	55	61	102	154	190
FB	45	45	45	55	35	70	70	76	80
G	40	40	40	50	35	60	70	75	80
L	92	92	92	102	115	156	197	255	295
LA	90,5	90,5	90,5	100,5	113,5	154,5	195,5	253,5	293,5
LB	108	108	108	118	131	172	213	271	311
Weight g	1660	1680	1690	1840	2090	2650	3270	4140	4710

Mounting options

SIDE THREADED HOLES

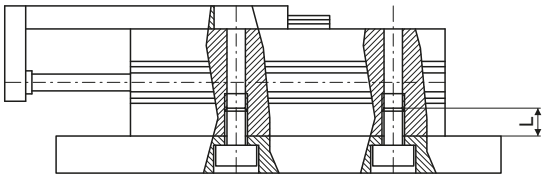

Bore	Screw	Torque (Nm)	Max. Lenght L (mm)
Ø8	M3	2,1	8
Ø12	M4	4,4	10
Ø16	M5	7,4	12
Ø20	M5	7,4	12
Ø25	M6	18	16

SIDE THROUGH HOLES

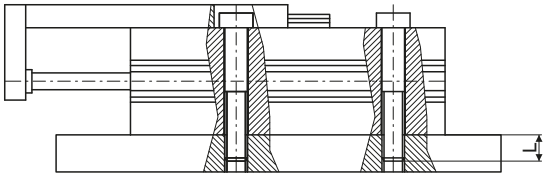

Bore	Screw	Torque (Nm)	Max. Lenght L (mm)
Ø8	M3	1,2	13
Ø12	M4	2,8	18,5
Ø16	M5	5,7	24
Ø20	M5	5,7	29
Ø25	M6	18	34

AXIAL THREADED HOLES

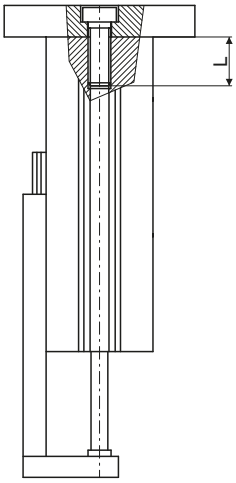

Bore	Screw	Torque (Nm)	Max. Lenght L (mm)
Ø8	M3	0,9	4
Ø12	M4	2,1	6
Ø16	M5	4,4	7
Ø20	M5	4,4	8
Ø25	M6	7,4	10

Mounting load

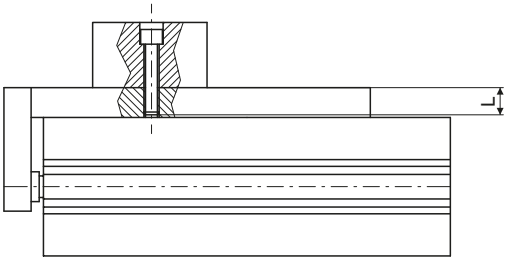

Bore	Screw	Torque (Nm)	Max. Lenght L (mm)
Ø8	M3	2,1	6
Ø12	M4	4,4	8
Ø16	M5	7,4	10
Ø20	M5	7,4	13
Ø25	M6	18	15

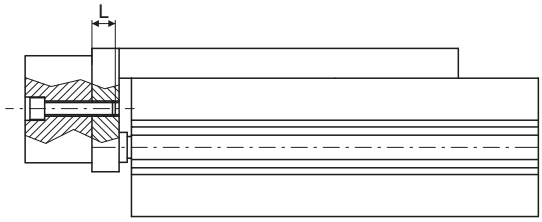

Bore	Screw	Torque (Nm)	Max. Lenght L (mm)
Ø8	M3	0,9	5
Ø12	M4	2,1	5,5
Ø16	M5	4,4	6
Ø20	M5	4,4	10
Ø25	M6	7,4	13

Kinetic energy (J)

Bore	With elastic bumper	With shock absorber
Ø8	0,027	See Dampers 6900
Ø12	0,055	
Ø16	0,11	
Ø20	0,16	
Ø25	0,24	

Overall dimensions and technical information are provided solely for informative purposes and may be modified without notice

Plate deflection

With front moment under static conditions completely extended and with load applied as indicated by the arrows.

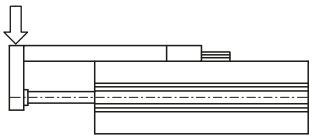

Ø8

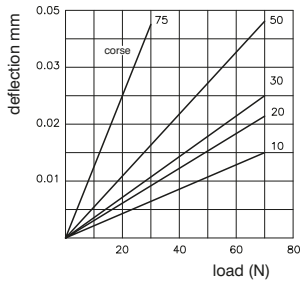

Ø12

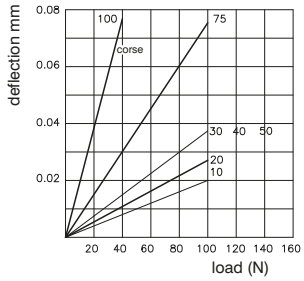

Ø16

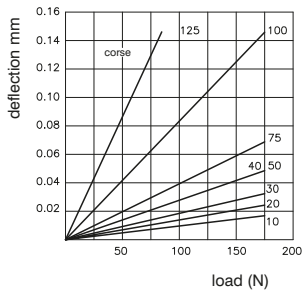

Ø20

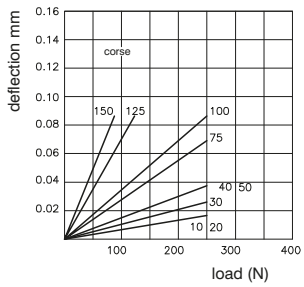

Ø25

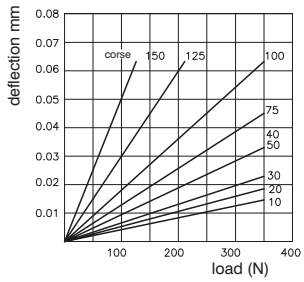

With side moment under static conditions completely extended and with load applied as indicated by the arrow

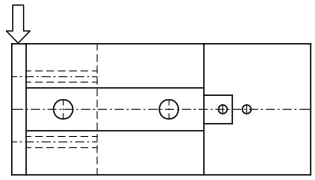

Ø8

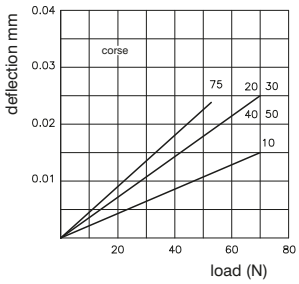

Ø12

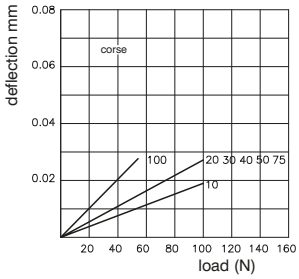

Ø16

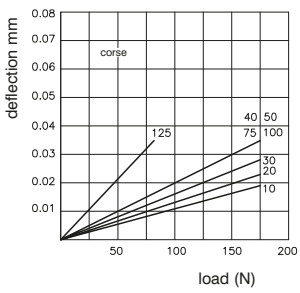

Ø20

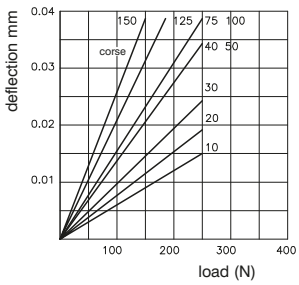

Ø25

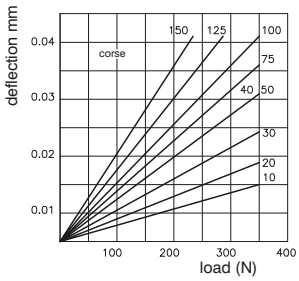

With misaligned side moment with load applied as indicated by the arrow at a distance "L" and with plate completely retracted.

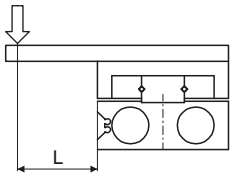

Ø8 L=50mm

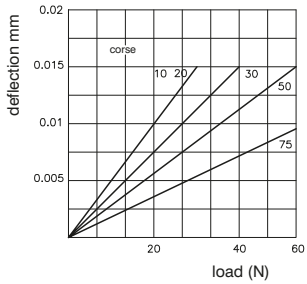

Ø12 L=65mm

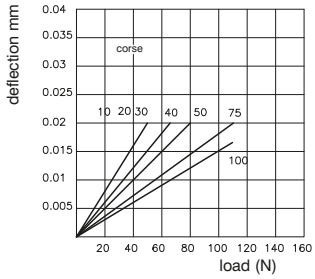

Ø16 L=90mm

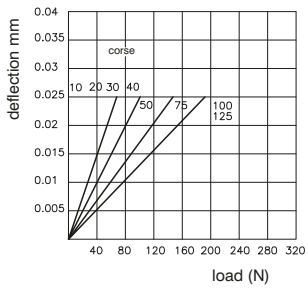

Ø20 L=120mm

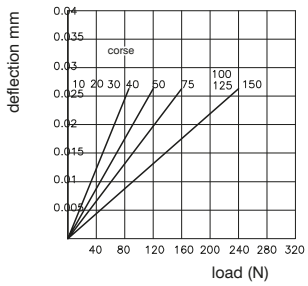

Ø25 L=150mm

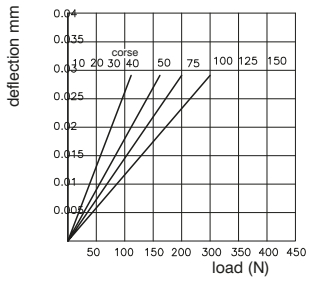

Accessories - Static moment
Dimensions with dampers

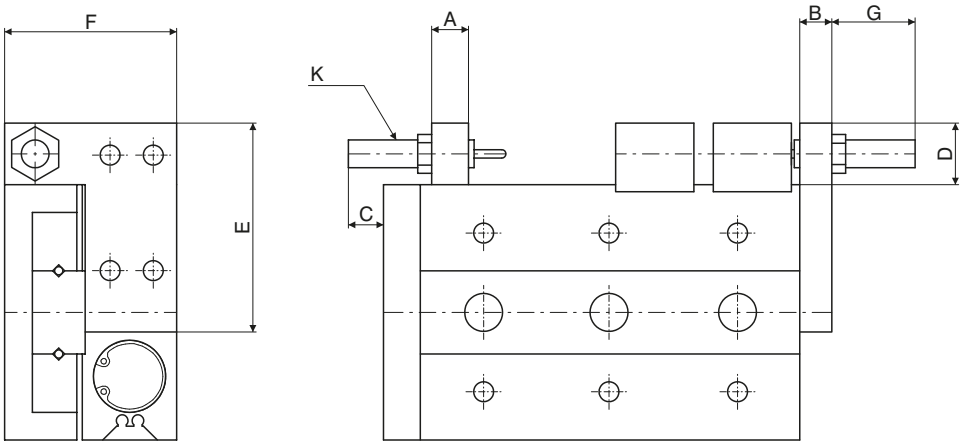

Dimensions with adjusting screw

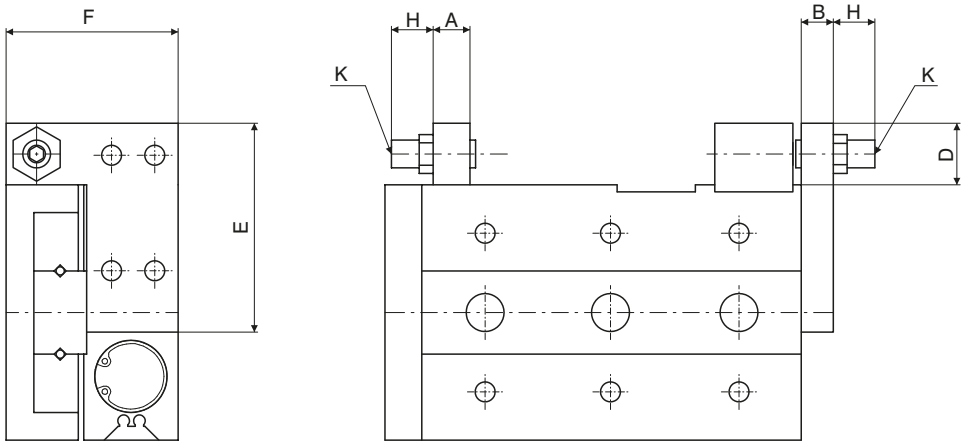

Bore	A	B	C	D	E	F	G max.	H max.	K
Ø8	7	8	26	14,5	38,5	23	25,5	28,5	M8x1
Ø12	9,5	8	21	15	45	31,5	24,5	32	M8x1
Ø16	11	10	19	18	55	37,5	29	34,5	M10x1
Ø20	13	12	28	24,5	70	47,5	42,5	35,5	M14x1,5
Ø25	16	15	34	24,5	80	54,5	39,5	37,5	M14x1,5

Overall dimensions and technical information are provided solely for informative purposes and may be modified without notice

Shock absorber mounting block / front stroke adjusting screw

Ordering code
6600.Ø.SU

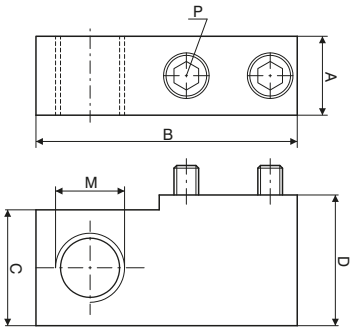

Bore	A	B	C	D	M	P
Ø8	7	23	14	15,5	M8x1	M3x16
Ø12	9,5	31	14,5	16		M4x16
Ø16	11	37	17,5	19	M10x1	M5x18
Ø20	13	45,5	23,5	26	M14x1,5	M6x25
Ø25	16	53,5		26,5		M8x25

Reference block

Ordering code
6600.Ø.SI

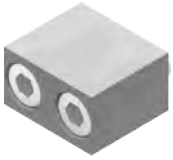

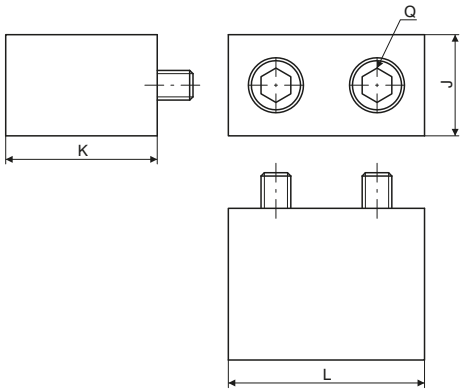

Bore	J	K	L	Q
Ø8	7	15,5	14,6	M3x16
Ø12	10	15	18,5	M4x14
Ø16	12	18,5	21	M5x18
Ø20	13	25,5	25	M6x25
Ø25	17		31	M8x25

Shock absorber mounting block / rear stroke adjusting screw

Ordering code
6600.Ø.SR

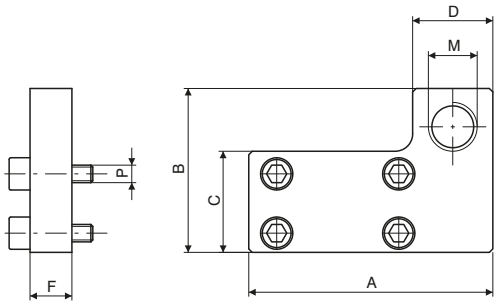

Bore	A	B	C	D	F	M	P
Ø8	38	23	12,5	14	8	M8x1	M3x12
Ø12	45	31	18				M4x12
Ø16	55	37	23,5	16	10	M10x1	M5x14
Ø20	70	47	29	23	12	M14x1,5	M5x16
Ø25	80	54	35		15		M6x20

Adjusting screw

Ordering code
6600.Ø.VR

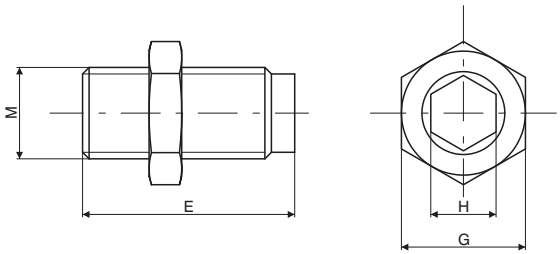

Bore	E	G	H	M
Ø8	36,5	12	4	M8x1
Ø12	40			
Ø16	44,5	14	5	M10x1
Ø20	47,5	22	8	M14x1,5
Ø25	52,5			

Series 6200 - Twin-rod slide units

General

TWIN-ROD SLIDE UNITS SERIES 6200 AND 6210

The 6200 series twin-rod linear guide units are wide cylinders used in manipulation applications and are characterised by their high force output thanks to their double piston design.
Bores range from 10mm to 32mm diameter, with sintered bronze bearings for standard applications and linear ball bearings for more rugged applications.
One major characteristic of these cylinders is the precision of their anti-rotational design, with the possibility of regulating the stroke to within 0.5mm.
When using magnetic sensors, the 1580 series sensor sits entirely within the extrusion, resulting in a smooth profile.

The liner guided units range includes , alongside the conventional two rod version with flange series 6200 , also the through rod version with twin flanges series 6210

Thanks to the twin-rod, double yoke design of the 6210 series it is possible to either fix the body and use the ends of the rods, or alternatively to fix the rod ends and use the body as the moving part. The cylinder can be piped through the body or through the rods depending on the application.
Stroke limiting screws are fitted at either end of the stroke. The substitution of these screws with shock absorbers makes it possible to use the cylinder on higher velocity applications (up to 500mm/sec.) Slots are provided along the edge of these units to accommodate 1580 series miniature sensors.

Overall dimensions and technical information are provided solely for informative purposes and may be modified without notice

Twin-rod slide units

Ordering code

6200.Ø.stroke. _

- **10**
- **15**
- **20**
- **25**
- **32**

- **B** = Control unit with bronze bush
- **C** = Control unit with bearing bush

Construction characteristics

Body	anodised aluminium
Rods	C43 chromed steel (control unit with bronze bush) tempered and chromed steel (control unit with bearing bush)
Piston	aluminium
Rod bushing	brass
End cap	anodised aluminium
Piston seal	oil resistant NBR rubber
Piston rod seal	PUR
Plate	anodised aluminium

Operational characteristics

Function	double acting
Fluid	Filtered air. No lubrication needed, if applied it shall be continuous.
Max. pressure	7 bar
Working temperature	-5°C - +70°C
Cushioning	elastic bumper

Standard strokes

Bore	Stroke														
	10	15	20	25	30	35	40	45	50	60	70	75	80	90	100
Ø10	●	●	●	●	●	●	●	●	●	●	●	●			
Ø15	●	●	●	●	●	●	●	●	●	●	●	●	●	●	●
Ø20	●	●	●	●	●	●	●	●	●	●	●	●	●	●	●
Ø25	●	●	●	●	●	●	●	●	●	●	●	●	●	●	●
Ø32	●	●	●	●	●	●	●	●	●	●	●	●	●	●	●

Overall dimensions Ø10 - Ø15

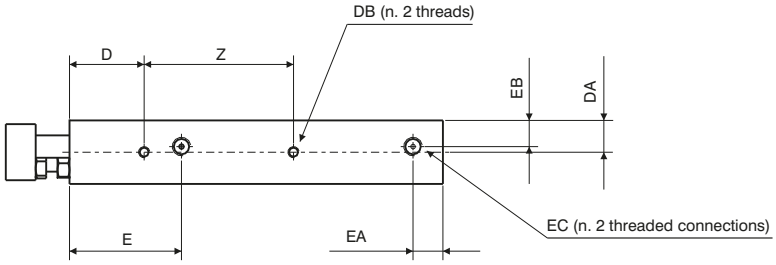

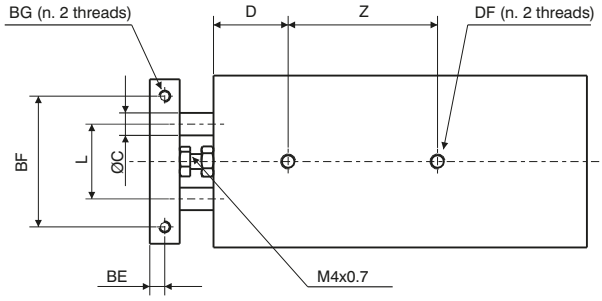

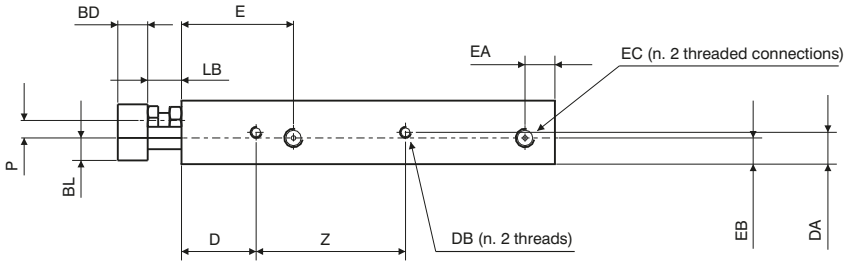

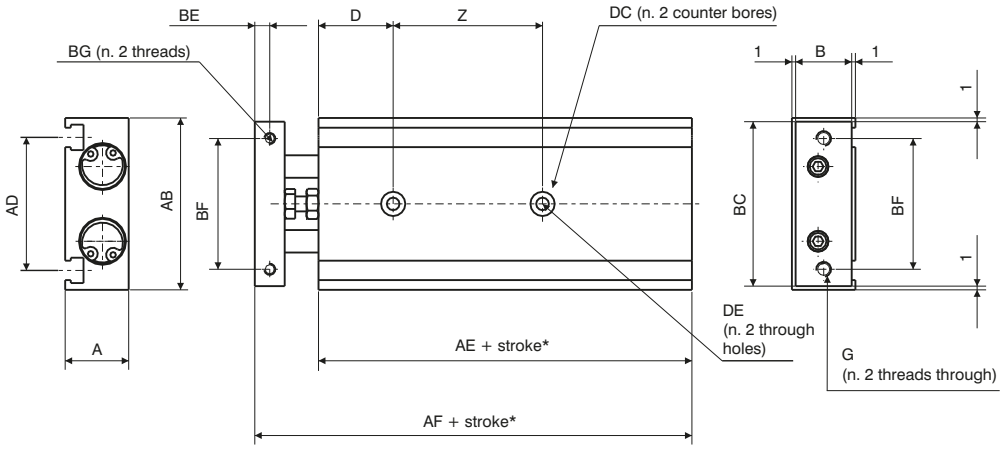

*Dimensions only refer to the "standard stroke"

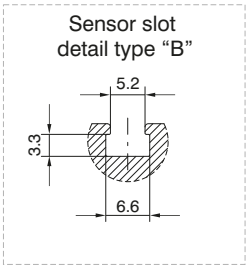

Bore		Ø10	Ø15
A		17	20
AB		46	58
AD		35,6	48
AE		55	60
AF		72	79
B		15	18
BC		44	56
BD		8	10
BE		4	5
BF		35	45
BG		M3x0,5	M4x0,7
	Useful depth	5	6
BL		6	9
C		6	8
D		20	30
DA		8,5	10
DB		M3x0,5	M4x0,7
	Useful depth	4,5	5
DC		6,5	8
	depth	3,3	4,4
DE		3,4	4,3
DF		M4x0,7	M5x0,8
	Useful depth	7	8
E		30	38,5
EA		8	8
EB		7	10
EC		M5x0,8	M5x0,8
	Useful depth	4,5	4,5
F		M4x0,7	M4x0,7
G		M4x0,7	M5x0,8
L		20	25
LB		9	9
P		4,7	4,5
Z	stroke 10 - 25	30	25
	stroke 30 - 50	40	35
	stroke 60 - 75	50	45
	stroke 80	-	45
	stroke 90-100	-	55

Overall dimensions and technical information are provided solely for informative purposes and may be modified without notice

Overall dimensions Ø20 - Ø25 - Ø32

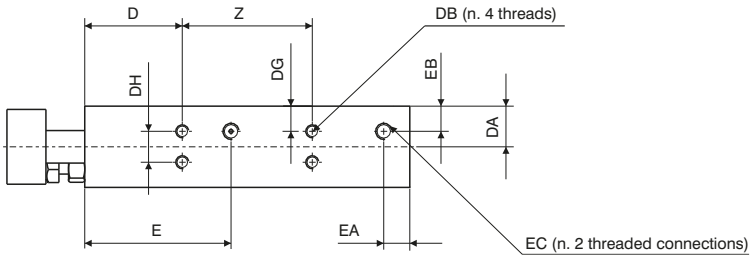

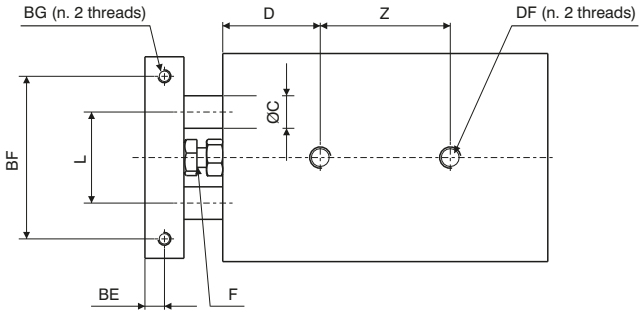

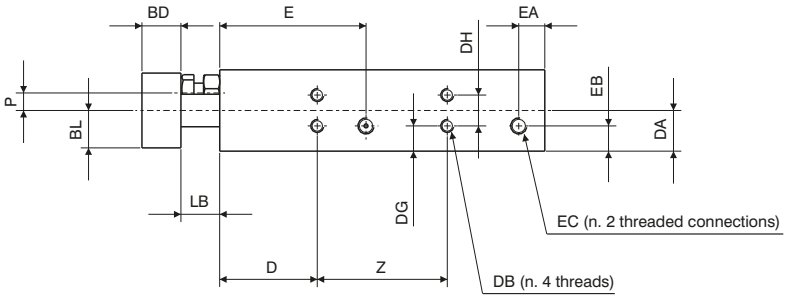

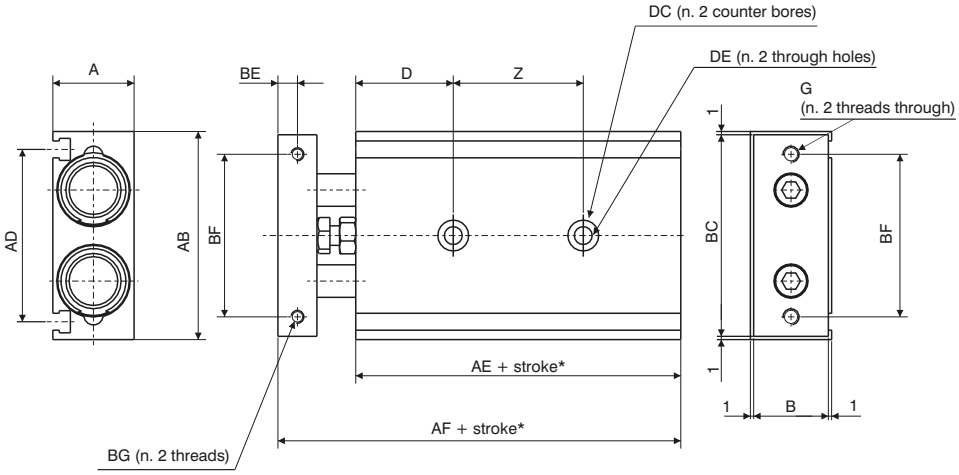

*Dimensions only refer to the "standard stroke"

Sensor slot
detail type “B”

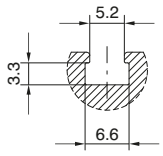

Bore		Ø20	Ø25	Ø32
A		25	30	38
AB		64	80	98
AD		53	64	76
AE		70	72	82
AF		94	96	112
B		23	28	36
BC		62	78	96
BD		12	12	16
BE		6	6	8
BF		50	60	75
BG		M4x0,7	M5x0,8	M5x0,8
	Useful depth	6	7,5	8
BL		11,5	14	18
C		10	12	16
D		30	30	30
DA		12,5	15	19
DB		M4x0,7	M5x0,8	M5x0,8
	Useful depth	6	7,5	7,5
DC		9,5	11	11
	depth	5,3	6,3	6,3
DE		5,5	6,9	6,9
DF		M6x1	M8x1,25	M8x1,25
	Useful depth	10	12	12
DG		7,75	8,5	9
DH		9,5	13	20
E		45	46	56
EA		8	9	10
EB		7,75	15	19
EC		M5x0,8	G1/8	G1/8
	Useful depth	4,5	6,5	6,5
F		M6x1	M6x1	M8x1,25
G		M5x0,8	M6x1	M6x1
L		28	35	44
LB		12	12	14
P		5,4	7,8	12
Z	stroke 10 - 25	30	30	40
	stroke 30 - 50	40	40	50
	stroke 60 - 100	60	60	70

Operating instructions

	Bore				
	Ø10	Ø15	Ø20	Ø25	Ø32
Stroke	**Control unit with bronze bush**				**Weight g**
10	150	250	400	610	1150
15	160	265	420	635	1190
20	170	280	440	660	1230
25	180	290	460	690	1275
30	190	300	480	720	1320
35	200	315	495	745	1360
40	210	330	510	770	1400
45	220	345	530	800	1450
50	230	360	550	830	1490
60	250	390	585	890	1580
70	270	420	620	950	1665
75	280	435	640	970	1710
80		450	660	995	1755
90		480	700	1060	1840
100		510	740	1000	1930
Stroke	**Control unit with bearing bush**				
10	160	270	430	620	1160
15	165	285	445	645	1205
20	170	300	460	670	1250
25	180	310	480	700	1295
30	190	320	500	730	1340
35	200	335	515	755	1380
40	210	350	530	780	1420
45	220	365	550	810	1465
50	230	380	570	840	1510
60	250	410	605	895	1595
70	270	440	640	955	1680
75	280	455	660	980	1720
80		470	680	1005	1765
90		500	715	1065	1855
100		530	750	1110	1940

Working pressure										**Theoretical slide force**
1 bar	16	10	35.5	25	63	47	98	75.5	161	120.5
1.5 bar	23.5	15	53	38	94	62.5	147.5	113.5	241	181
2 bar	31.5	20.0	70.5	50.5	125.5	94	196.5	151	321.5	241
3 bar	47	30	106	75.5	188.5	141	294.5	227	482.5	362
4 bar	63	40	141	101	251	188	393	302.5	643	482.5
5 bar	78.5	50	176.5	126	314	236	491	378	804	603
6 bar	94	60	212	151	377	283	589	453.5	965	723.5
7 bar	110	70	247	176.5	440	330	687.5	529	1125.6	844
	Out	In	Out	In	Out	In	Out	In	Out	In

Overall dimensions and technical information are provided solely for informative purposes and may be modified without notice

Operating instructions

Possible loads

Control unit with bronze bush

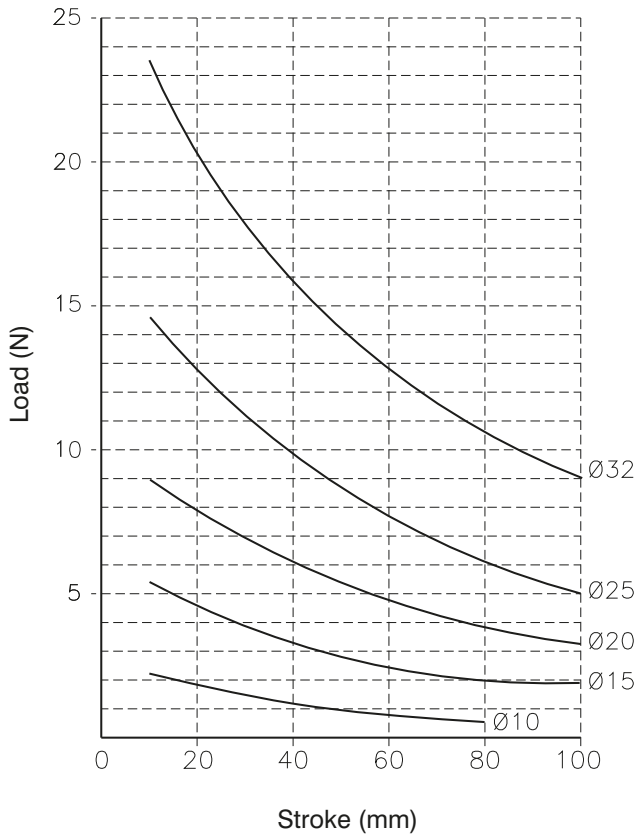

Control unit with bearing bush

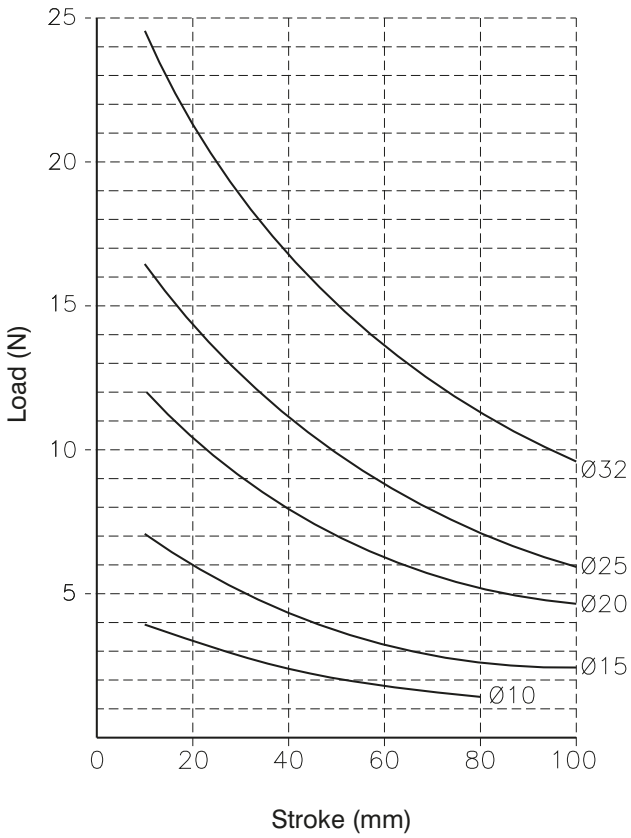

Twin-rod slide units

Ordering code

6200.Ø.stroke. _

- **10**
- **15**
- **20**
- **25**
- **32**

- **B** = Control unit with bronze bush
- **C** = Control unit with bearing bush

Construction characteristics

Body	anodised aluminium
Rods	C43 chromed steel (control unit with bronze bush) tempered and chromed steel (control unit with bearing bush)
Piston	aluminium
Rod bushing	brass
End plate	anodised aluminium
Piston seal	oil resistant NBR rubber
Piston rod seal	PUR
Plate	anodised aluminium

Technical characteristics

Function	double acting
Fluid	Filtered air. No lubrication needed, if applied it shall be continuous.
Max. pressure	7 bar
Working temperature	-5°C - +70°C
Cushioning	elastic bumper

Standard strokes

Bore	Stroke														
	10	15	20	25	30	35	40	45	50	60	70	75	80	90	100
Ø10	●	●	●	●	●	●	●	●	●	●	●	●			
Ø15	●	●	●	●	●	●	●	●	●	●	●	●	●	●	●
Ø20	●	●	●	●	●	●	●	●	●	●	●	●	●	●	●
Ø25	●	●	●	●	●	●	●	●	●	●	●	●	●	●	●
Ø32	●	●	●	●	●	●	●	●	●	●	●	●	●	●	●

Overall dimensions and technical information are provided solely for informative purposes and may be modified without notice

Overall dimensions Ø10

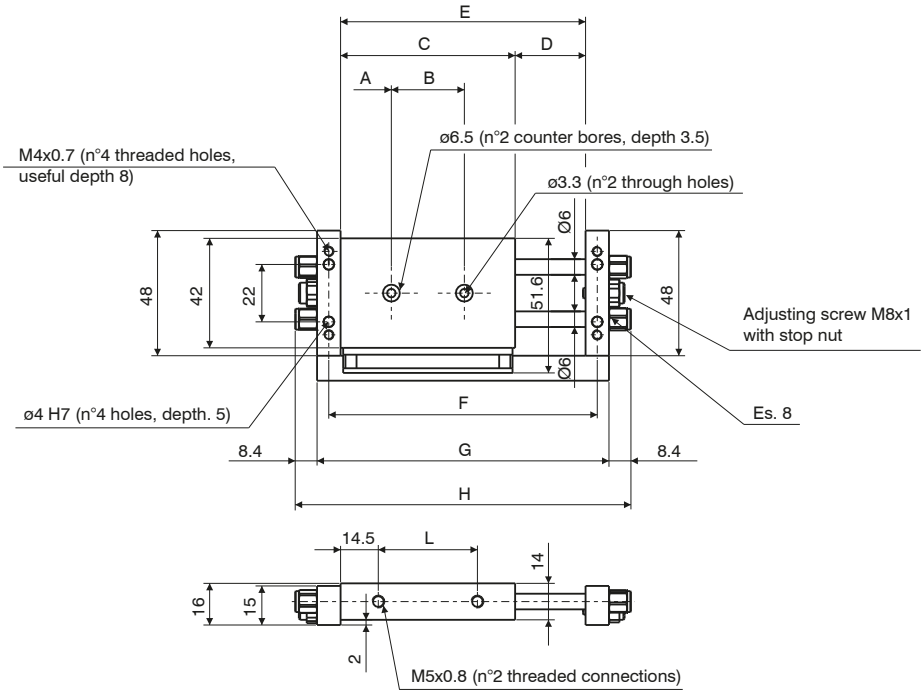

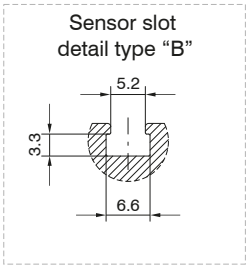

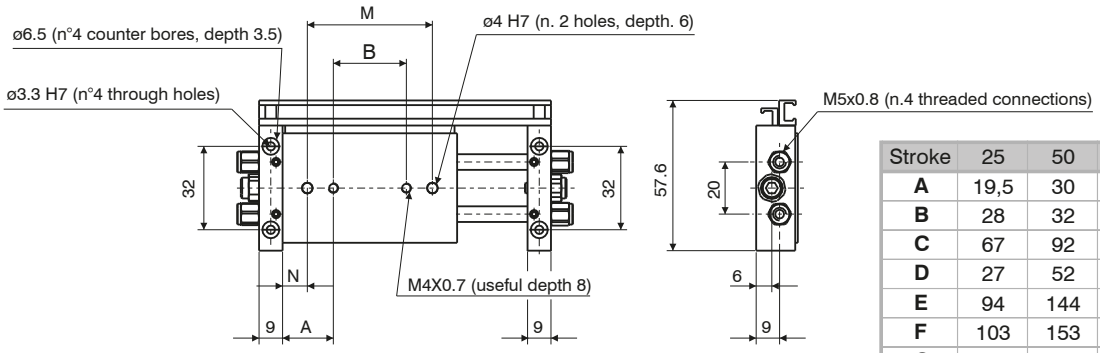

Stroke	25	50	75	100
A	19,5	30	35	35
B	28	32	47	72
C	67	92	117	142
D	27	52	77	102
E	94	144	194	244
F	103	153	203	253
G	112	162	212	262
H	129	179	229	279
L	38	63	88	113
M	48	52	67	92
N	9,5	20	25	25
				Weight
g	160	230	280	310

MOUNTING WITH FIXED PLATE

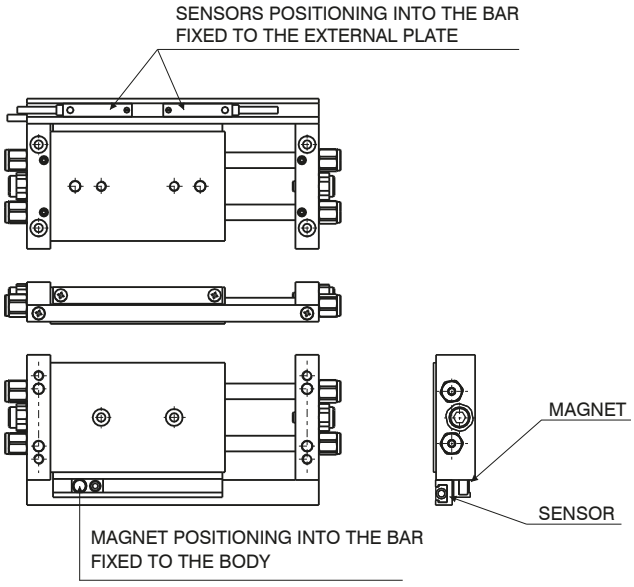

MOUNTING WITH A FIXED BODY

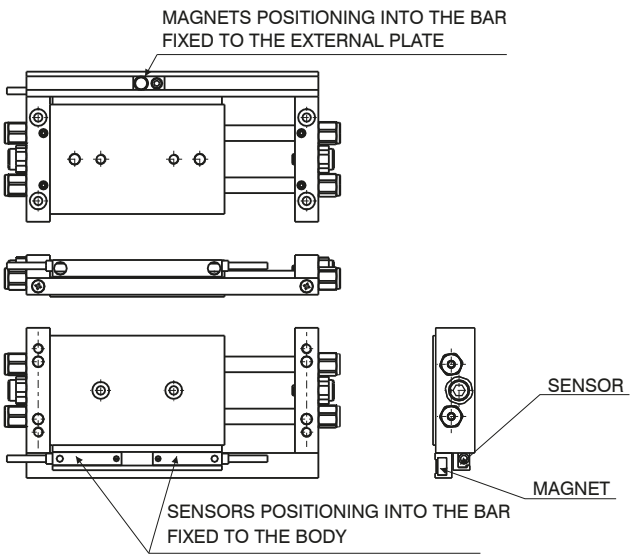

Overall dimensions Ø15

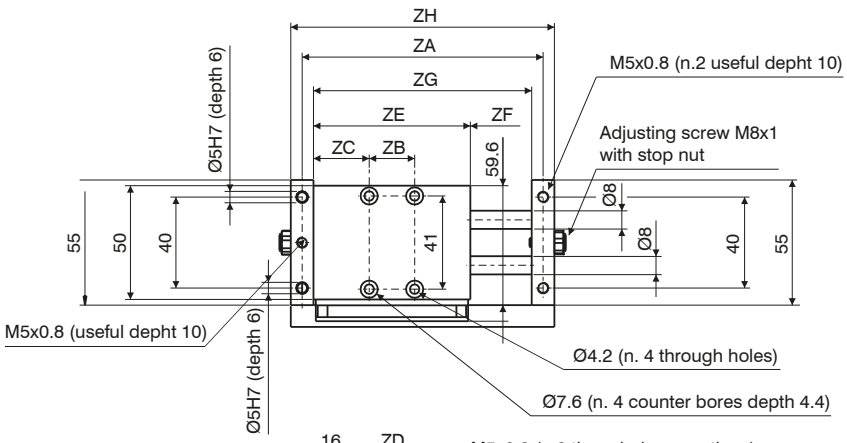

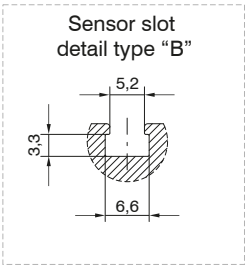

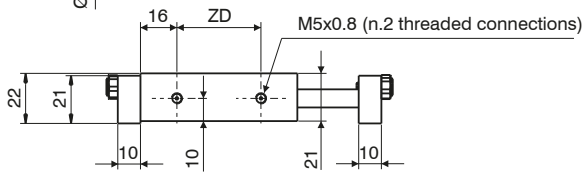

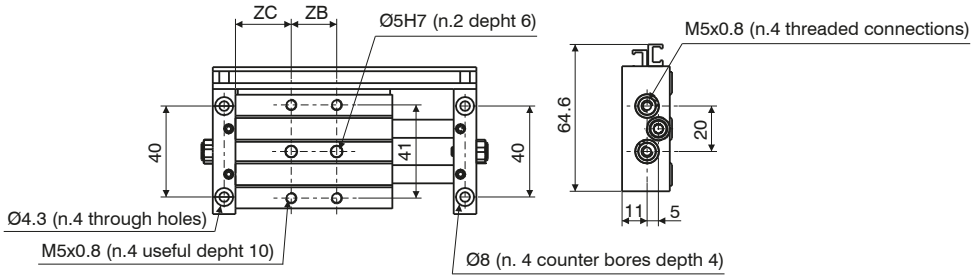

Stroke	25	50	75	100	125	150	175	200
ZA	106	156	206	256	306	356	406	456
ZB	20	45	65	90	90	90	90	90
ZC	24,5	24,5	27	27	39,5	52	64,5	77
ZD	37	62	87	112	137	162	187	212
ZE	69	94	119	144	169	194	219	244
ZF	27	52	77	102	127	152	177	202
ZG	96	146	196	246	296	346	396	446
ZH	116	166	216	266	316	366	416	466
								Weight
g	240	350	450	550	670	750	900	1000

MOUNTING WITH FIXED PLATE

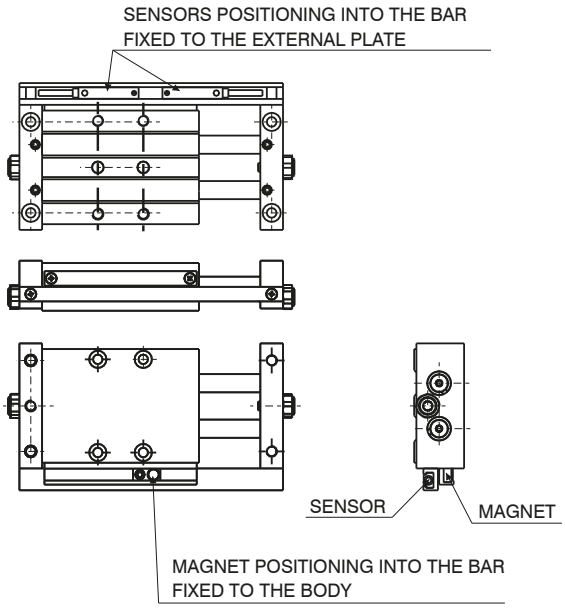

MOUNTING WITH FIXED BODY

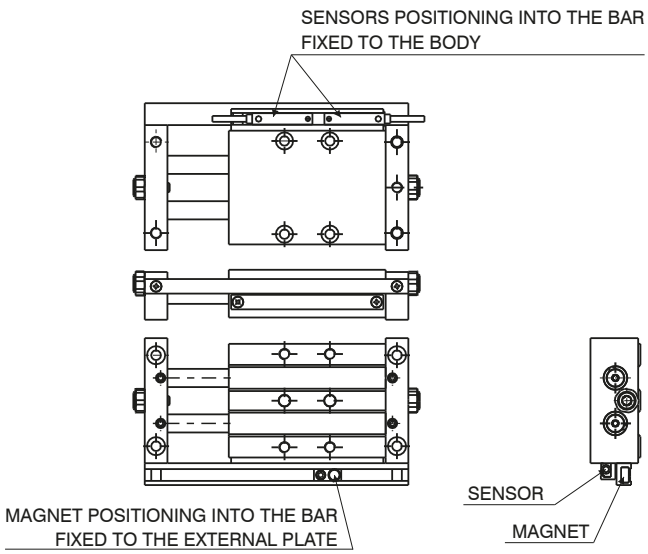

Overall dimensions and technical information are provided solely for informative purposes and may be modified without notice

Overall dimensions Ø25

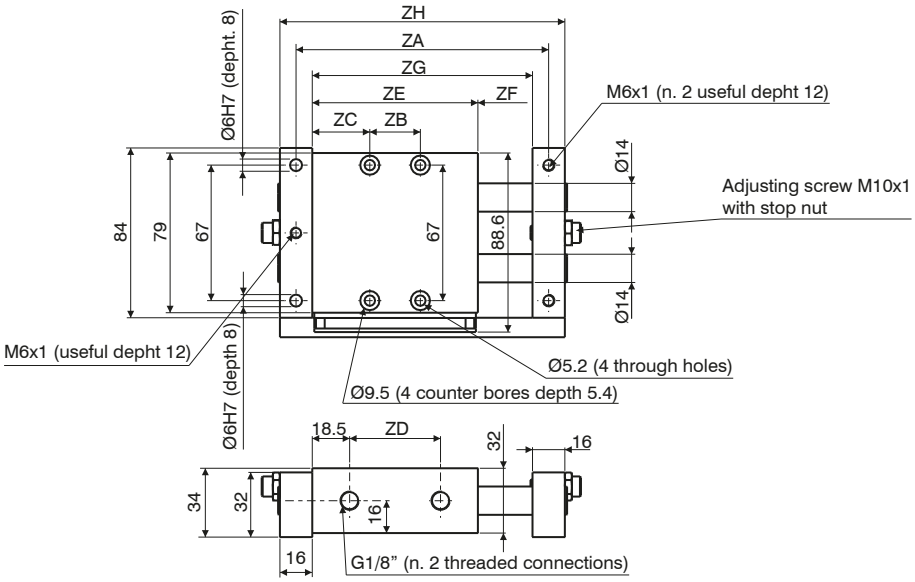

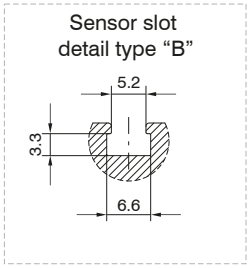

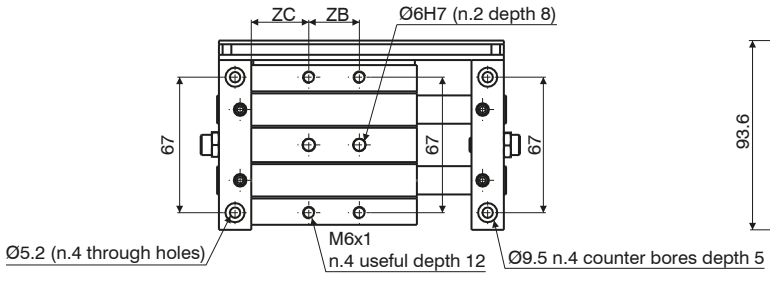

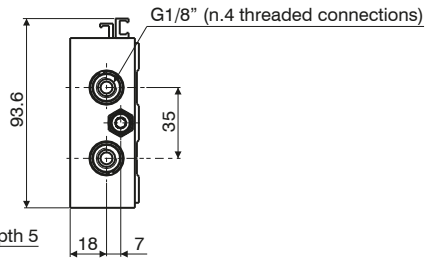

Stroke	25	50	75	100	125	150	175	200
ZA	125	175	225	275	325	375	425	475
ZB	25	45	65	90	90	90	90	90
ZC	28,5	31	33,5	33,5	46	58,5	71	83,5
ZD	45	70	95	120	145	170	195	220
ZE	82	107	132	157	182	207	232	257
ZF	27	52	77	102	127	152	177	202
ZG	109	159	209	259	309	359	409	459
ZH	141	191	241	291	341	391	441	491
								Weight
g	950	1140	1350	1600	1800	2000	2300	2500

MOUNTING WITH FIXED PLATE

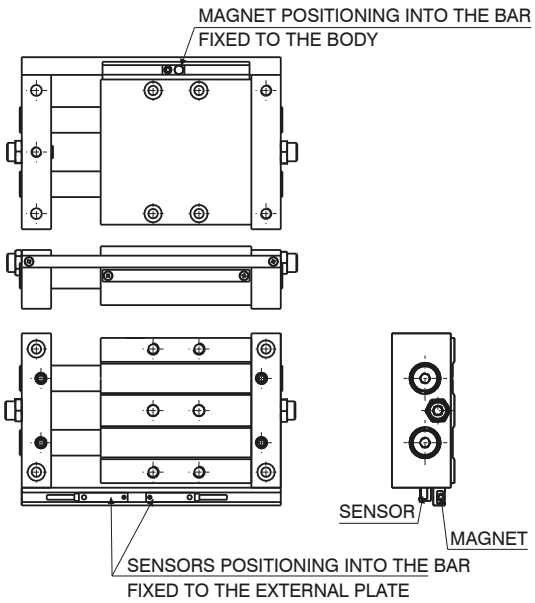

MOUNTING WITH FIXED BODY

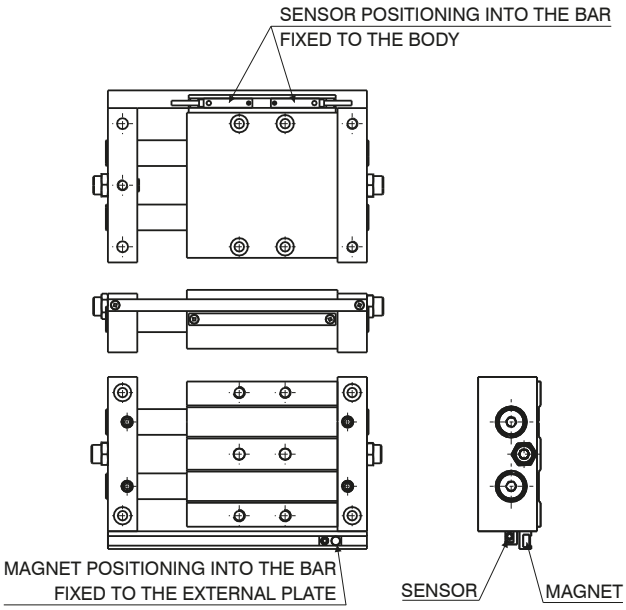

Operating conditions

Theoretical force (N)

Working pressure	Bore		
	Ø10	Ø15	Ø25
2 bar	20	41	119
3 bar	30	62	179
4 bar	40	83	239
5 bar	51	104	299
6 bar	61	124	358
7 bar	71	145	418
8 bar	81	166	478
9 bar	91	186	537
	101	207	597
	Effective area (mm^2)		

Deflection of piston rods

Applied load to body centre

Bore	Load	Deflection (mm)	
Ø10	10 N	0,07	/
Ø15	30 N	0,08	0,28
Ø25	60 N	0,02	0,08
		100	200
		Stroke	

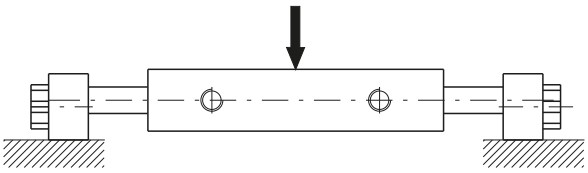

Applied load to body centre

Bore	Load	Deflection (mm)			
Ø10	3 N	0,06	0,3	/	/
Ø15	5 N	0,1	0,2	0,5	1
Ø25	10 N	0,03	0,1	0,15	0,25
		50	100	150	200
		Stroke			

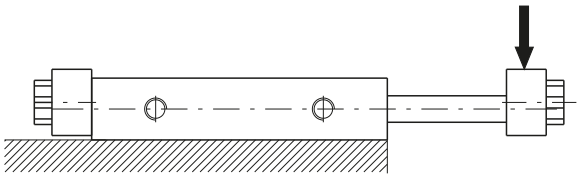

Control unit with bronze bushes

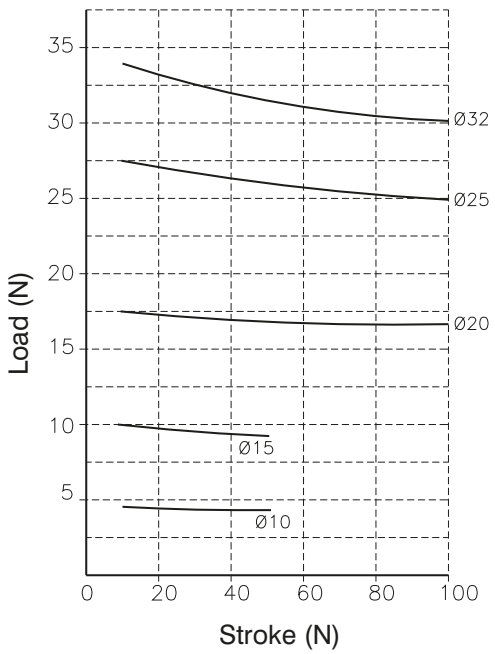

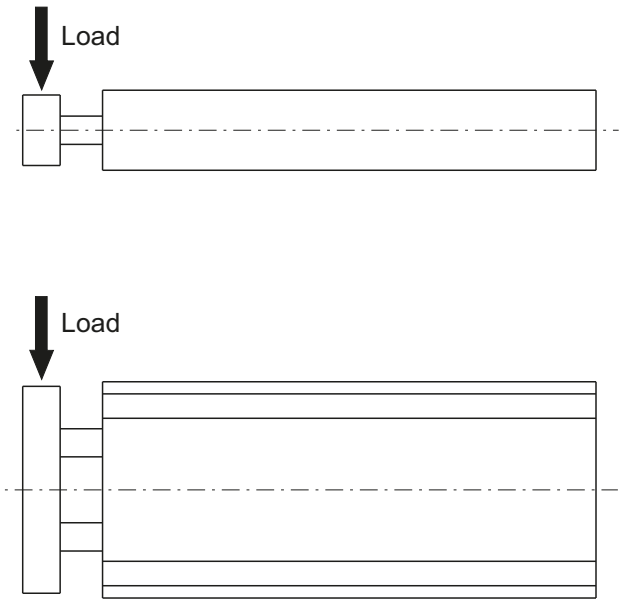

Overall dimensions and technical information are provided solely for informative purposes and may be modified without notice

Guide cylinders

Ordering code

6700.Ø.stroke

- 10
- 16
- 20

Construction characteristics

Body	anodised aluminium
Piston rod	stainless steel
Piston	aluminium
Piston rod bushing	aluminium
End cap	anodised aluminium
Seals	oil resistant NBR rubber
Table	anodised aluminium

Operational characteristics

Fluid	Filtered air. No lubrication needed, if applied it shall be continuous.
Working pressure	1.2 - 7 bar
Working temperature	-5°C - +70°C
Cushioning	with elastic bumper

Standard strokes

	Stroke								
Bore	5	10	15	20	25	30	40	50	60
Ø10	●	●	●	●	●	●	●	●	●
Ø16	●	●	●	●	●	●	●	●	●
Ø20	●	●	●	●	●	●	●	●	●

Theoretical force

Bore	Effective area (mm²)		Force (N)					
Ø10	Out	28,3	5,7	8,5	11,3	14,2	17	19,8
	In	21,2	4,2	6,4	8,5	10,6	12,7	14,8
Ø16	Out	78,5	15,7	23,6	31,4	39,3	47,1	55
	In	66	13,2	19,8	26,4	33	39,6	46,2
Ø20	Out	314	62,8	94,2	125,6	157	188,4	219,8
	In	264	52,8	79,2	105,6	132	158,4	184,8
			2	3	4	5	6	7
			Working pressure (bar)					

Overall dimensions - Ø10

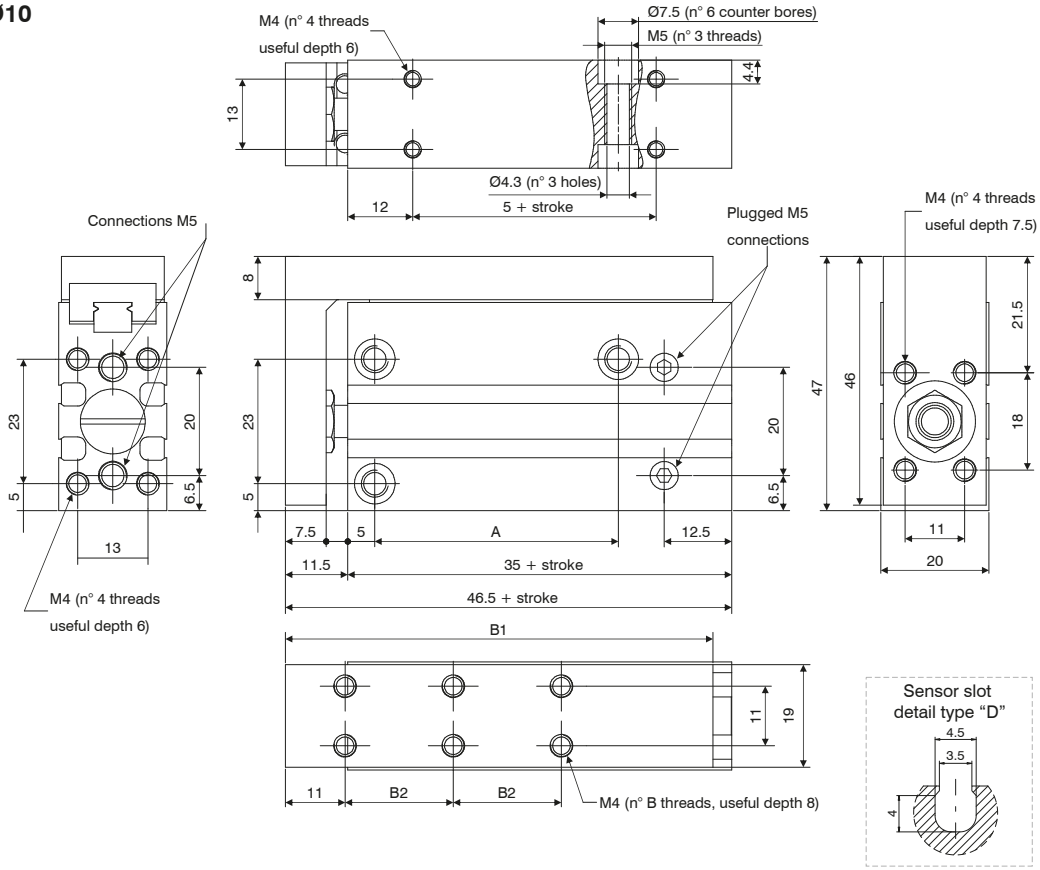

Table of dimensions

	Standard strokes								
	5	10	15	20	25	30	40	50	60
A	14		24		30		45	45	60
B1	49		59		69		79	79	99
B2	10		20		30		20	20	30
B	4						6		
Weight (g)	117	125	140	148	162	170	192	215	238

Overall dimensions - Ø16

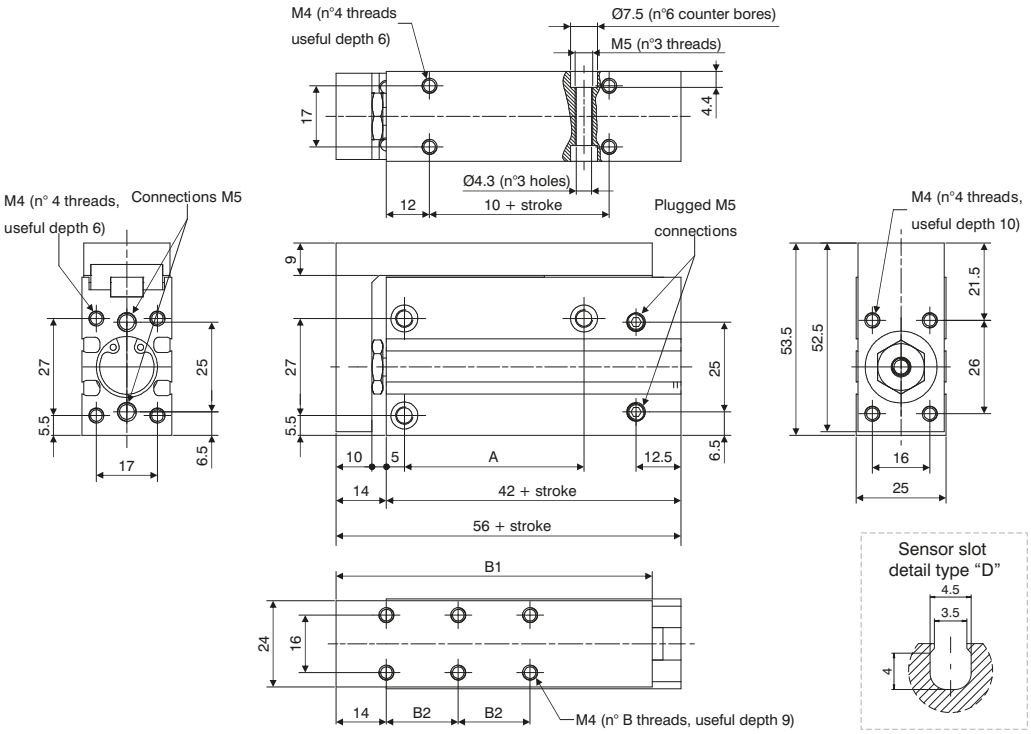

Table of dimensions

	Standard strokes								
	5	10	15	20	25	30	40	50	60
A	20		30		40		50	60	
B1	58		68		78		88	98	108
B2	10		20		30		20	25	30
B	4						6		
Weight (g)	215	230	250	260	280	290	325	350	390

Overall dimensions - Ø20

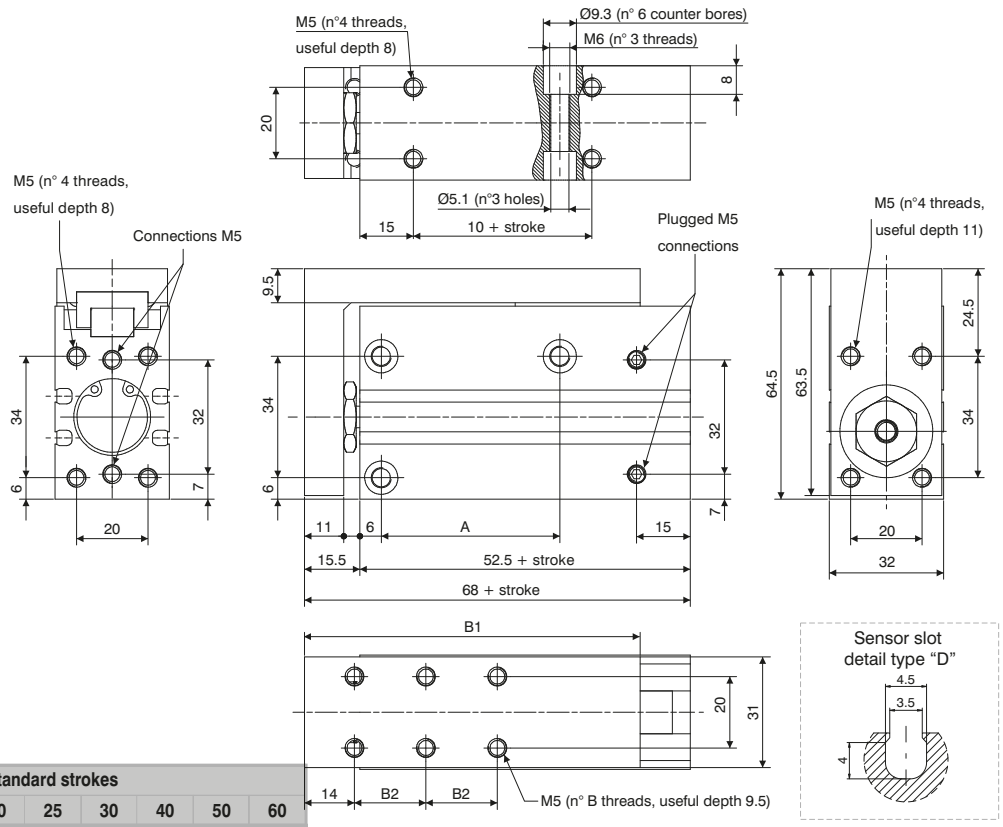

Table of dimensions

	Standard strokes								
	5	10	15	20	25	30	40	50	60
A	20		25		40		50	70	
B1	64		74		84		94	104	114
B2	10		20		30		20	25	30
B	4						6		
Weight (g)	440	455	490	505	540	560	600	660	700

Overall dimensions and technical information are provided solely for informative purposes and may be modified without notice

Fixing - Load

LATERAL (THROUGH SCREW)

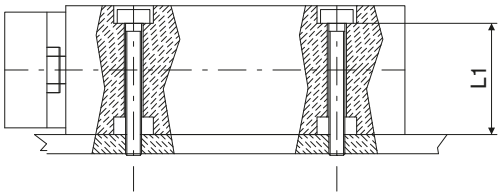

	SCREW	Maximum torque (Nm)	L1
Ø10	M4	2.5	15.6
Ø16	M4	2.5	20.6
Ø20	M5	5.1	24

LATERAL (THREADED HOLE)

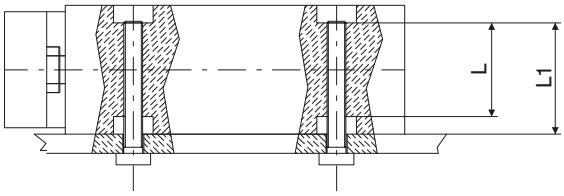

	SCREW	Maximum torque (Nm)	L1	L
Ø10	M5	5.1	15.6	11.2
Ø16	M5	5.1	20.6	16.2
Ø20	M6	8.1	24	16

VERTICAL (THREADED HOLE)

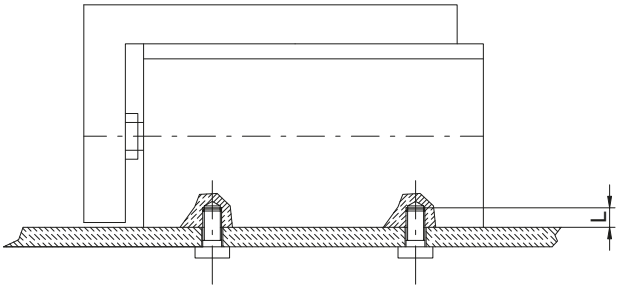

	SCREW	Maximum torque (Nm)	L
Ø10	M4	2.5	6
Ø16	M4	2.5	6
Ø20	M5	5.1	8

AXIAL (THREADED HOLE)

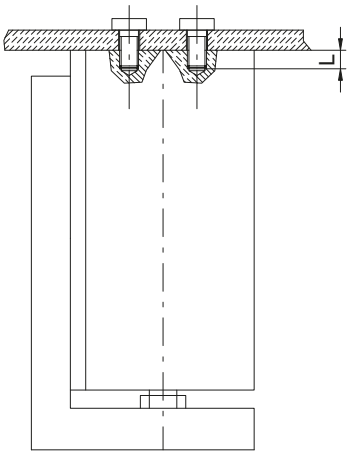

	SCREW	Maximum torque (Nm)	L
Ø10	M4	2.5	6
Ø16	M4	2.5	6
Ø20	M5	5.1	8

LOAD

FRONTAL MOUNTING

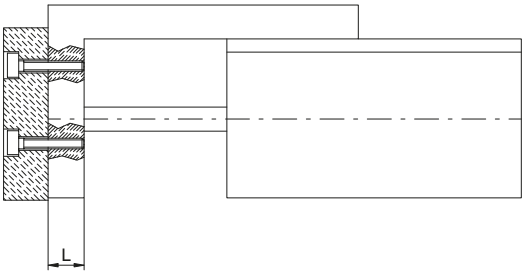

	SCREW	Maximum torque (Nm)	L
Ø10	M4	2.5	7.5
Ø16	M4	2.5	10
Ø20	M5	5.1	11

BACK MOUNTING

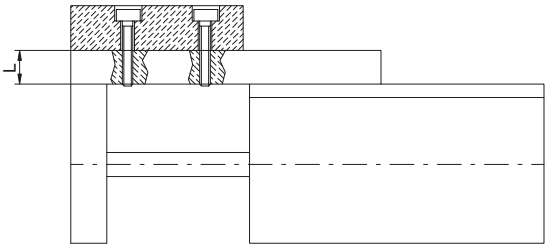

	SCREW	Maximum torque (Nm)	L
Ø10	M4	2.5	8
Ø16	M4	2.5	9
Ø20	M5	5.1	9.5

Fixing - Load

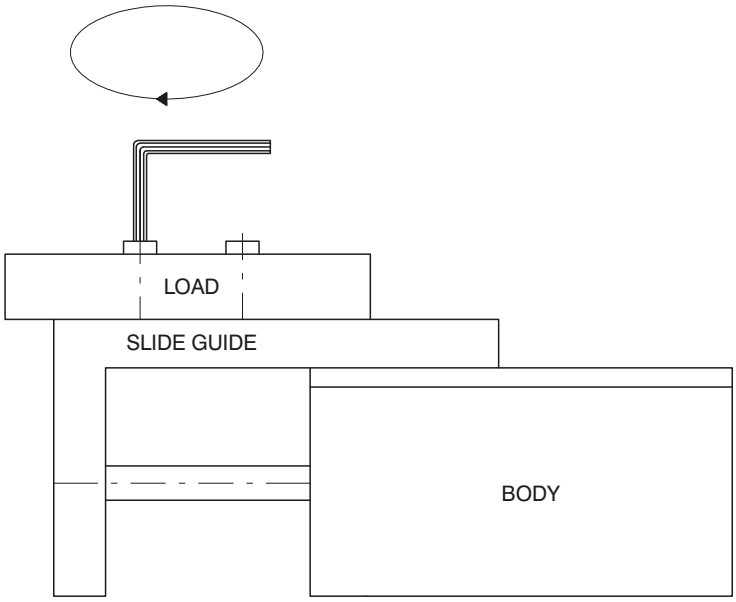

ATTENTION : Slide must be blocked before fixing the load this operation shoul not be done by blocking the body as the guide could get damaged.

CONNECTION BETWEEN PLATE AND ROD

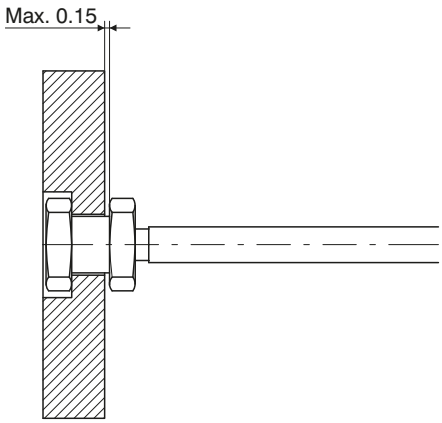

The fluctuating connection, maximum clearence 0.15mm as indicated by the arrow

Overall dimensions and technical information are provided solely for informative purposes and may be modified without notice

Plate deflection graphs

Plate deviation (arrow) when the load is applied on the spot indicated with the arrow and the unit completely extended

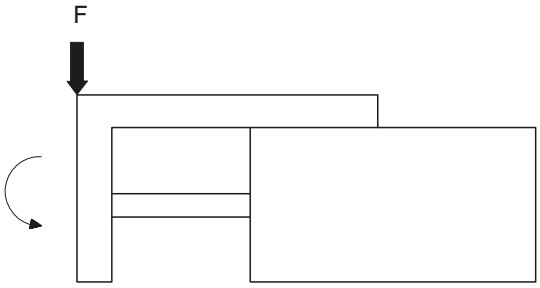

Ø10

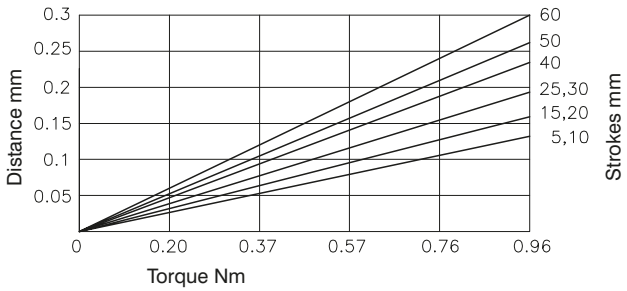

Ø16

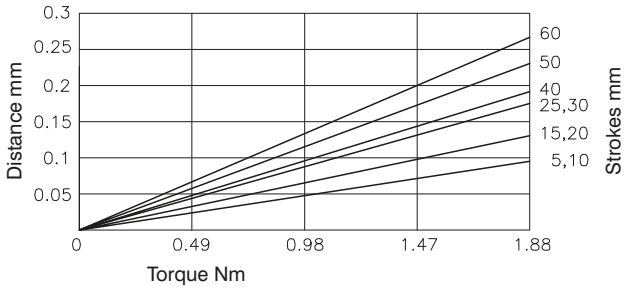

Ø20

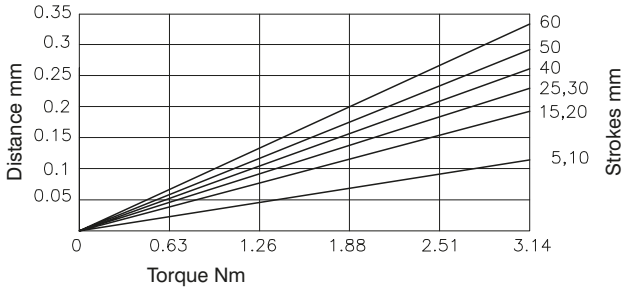

Plate deviation (arrow) when the load is applied on the spot indicated with the arrow and the unit completely extended

Ø10

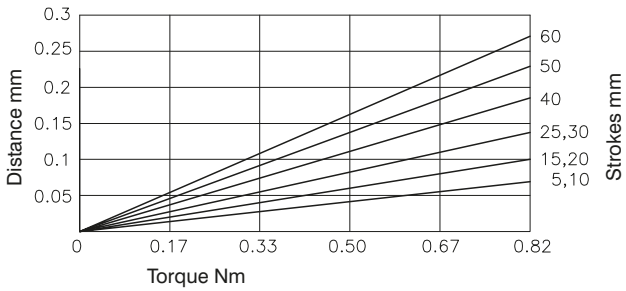

Ø16

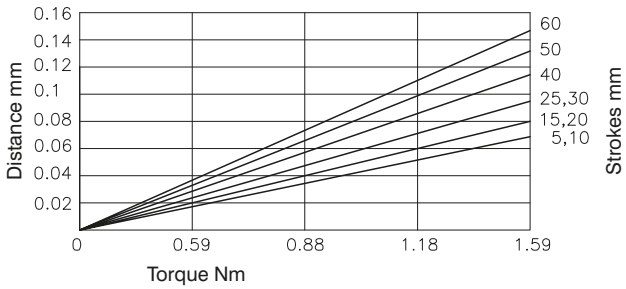

Ø20

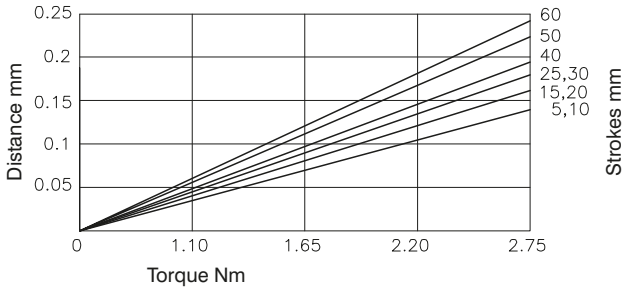

Plate deflection graphs outer stroke - selection graphs

Plate deviation (compared to A) when the load is applied on the spot indicated with the arrow and the unit completely extended

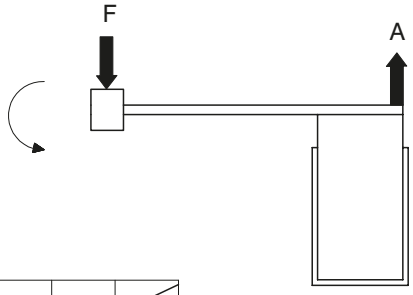

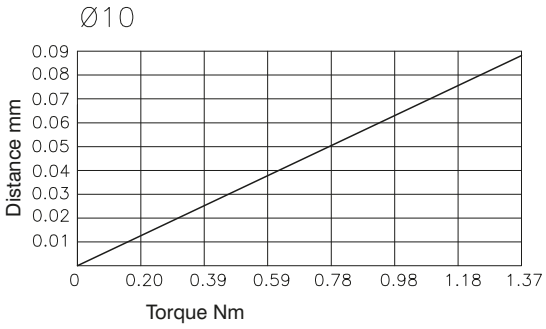

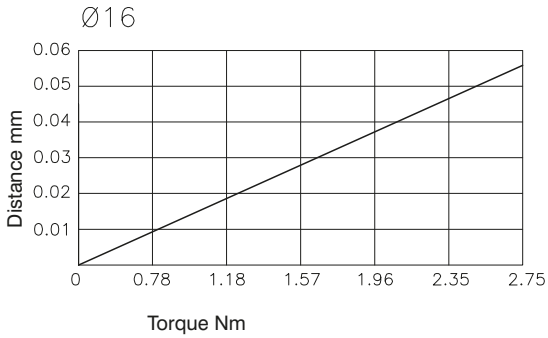

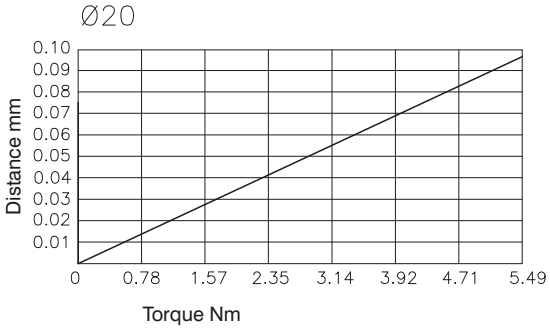

MOUNTING POSITION	VERTICAL			HORIZONTAL								
	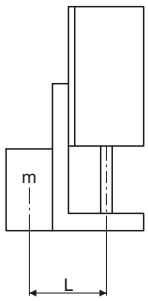			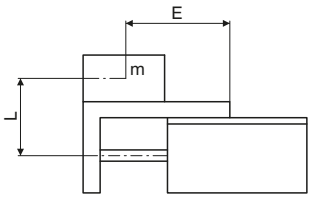								
MAX. SPEED (mm/sec.)	100	200	300	100			200			300		
Load eccentricity				50	100	200	50	100	200	50	100	200
Selection graphs	1	2	3	4	5	6	7	8	9	10	11	12

Selection graphs 1 - 3 (vertical mounting)

Drawing 1
Maximum speed 100 mm/s or lower

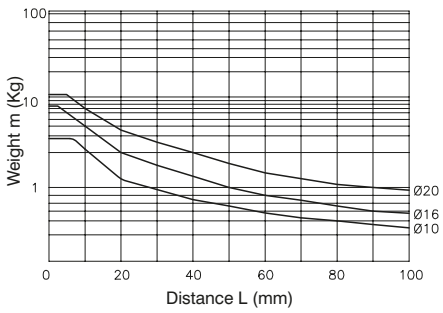

Drawing 2
Maximum speed 300 mm/s or lower

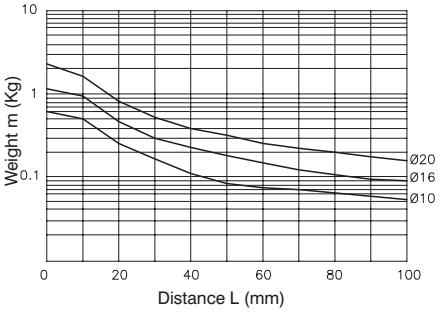

Drawing 3
Maximum speed 500 mm/s or lower

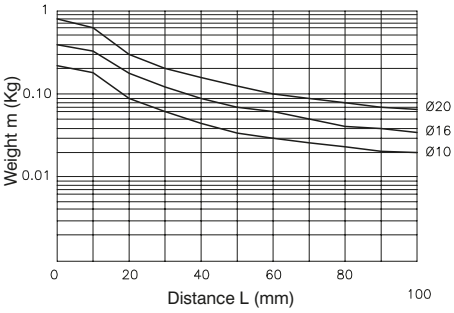

Overall dimensions and technical information are provided solely for informative purposes and may be modified without notice

Selection graphs

Selection graphs 4 - 12 (horizontal mounting)

Drawing 4 load eccentricity 50mm
Maximum speed 100 mm/s or lower

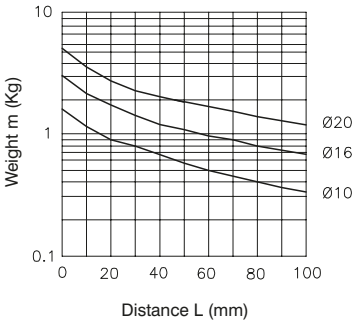

Drawing 7 load eccentricity 50mm
Maximum speed 300 mm/s or lower

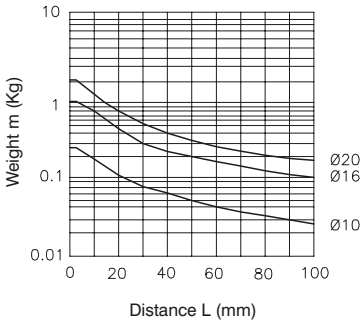

Drawing 10 load eccentricity 50mm
Maximum speed 500 mm/s or lower

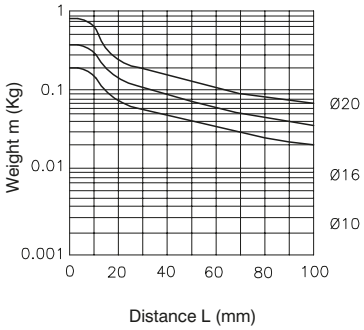

Drawing 5 load eccentricity 100mm
Maximum speed 100 mm/s or lower

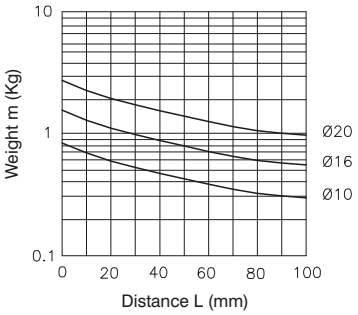

Drawing 8 load eccentricity 100mm
Maximum speed 300 mm/s or lower

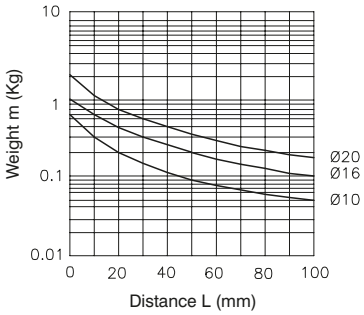

Drawing 11 load eccentricity 100mm
Maximum speed 500 mm/s or lower

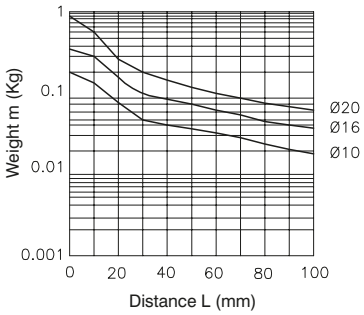

Drawing 6 load eccentricity 200mm
Maximum speed 100 mm/s or lower

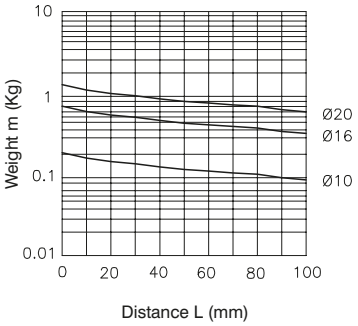

Drawing 9 load eccentricity 200mm
Maximum speed 300 mm/s or lower

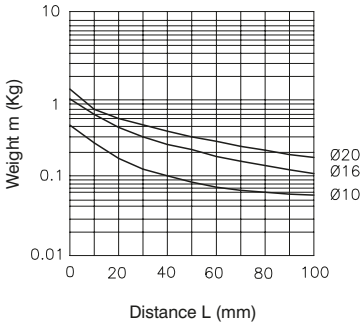

Drawing 12 load eccentricity 200mm
Maximum speed 500 mm/s or lower

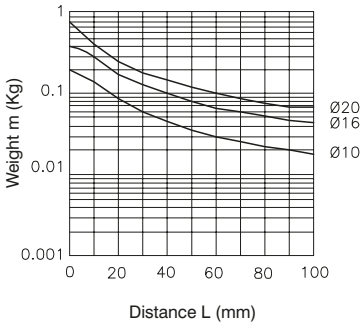

Series 1605, Mechanically coupled

General

The purpose of producing a rodless cylinder is to provide a space saving option over conventional cylinders. On a traditional rod type cylinder, the total space occupied with rod out is more than double the length of the cylinder, while with rodless cylinder it is little more than its stroke. Profiled tube allows mounting of sensors 1500._, RS._, HS._ and 1580._, MRS._, MHS._ on the two sides of carriage, by means of suitable brackets. Standard accessories include foot mounting brackets for installation on cylinder and caps, intermediate mounting brackets to give support to long stroke cylinders under load (over one metre), an oscillating coupling device for installation between the mounting plate and the load and on request, a very precise external movement device.

Construction characteristics

End covers	anodised aluminium
Barrel	anodised aluminium
Bands	tempered stainless steel
Mounting place	anodised aluminium
Piston	acetal resin
Guide blocks	acetal resin
Cushion bearings	aluminium
Piston seals	special 80 shore nitril mixture, wear resistant
Other seals	NBR oil-resistant rubber

Caratteristiche di funzionamento

Fluid	Filtered air. No lubrication needed, if applied it shall be continuous.
Pressure	0.5 - 8 bar
Working temperature	-5°C - +70°C
Max. speed	1.5 m/sec. (normal working conditions)
Bores	Ø 25 - 32 - 40 - 50 - 63
Max. strokes	6 m

Please follow the suggestions below to ensure a long life for these cylinders:
- use clean and lubricated air
- Please adequately evaluate the load involved and its direction, especially in respect to the moving carriage (also see tables for loads and admitted moments).
- avoid high speeds together with long strokes and heavy loads: this would produce kinetic energy which the cylinder cannot absorb, especially if used as a limit stop (in this case use mechanical stop device)
- evaluate the environmental characteristics of cylinder used (high temperature, hard atmosphere, dust, humidity etc.)

Please note: air must be dried for applications with lower temperature.
Use hydraulic oils H class (ISO Vg32) for correct continued lubrication.
Our Technical Department will be glad to help.

For applications where a low smooth uniform operations speed is required, you must specify this on your purchase order so that we can use the proper special grease.

Use and maintenance

This type of cylinder, due to its characteristics, has to be used within certain criteria. Correct use will give long and troublefree operation. Filtered and lubricated compressed air reduce seal wear. Verify that the load will not produce unforeseen stresses. Never combine high speed with heavy load. Always support the long stroke cylinder with intermediate brackets and never exceed the specified working conditions.
If maintenance is required, follow the instructions supplied with the repair kit.

Overall dimensions and technical information are provided solely for informative purposes and may be modified without notice

Basic version

Ordering code
1605.Ø.stroke.01.M (Max. stroke 6 mt.)

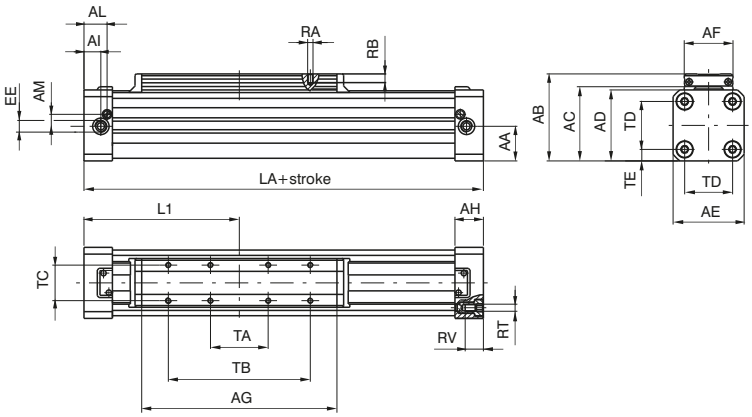

Left head

Ordering code
1605.Ø.stroke.02.M (Max. stroke 6 mt.)

Possibility of a single feed cylinder head

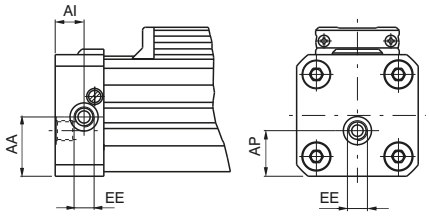

Right head

Ordering code
1605.Ø.stroke.03.M (Max. stroke 6 mt.)

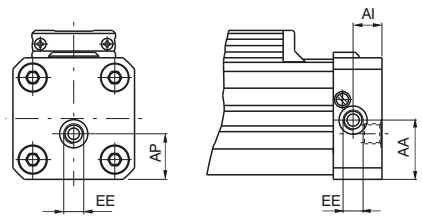

Bore		25	32	40	50	63
AA		19,5	25,5	31	39	46,5
AB		56	70	80	98	113,5
AC		48,5	60	70	85	100
AD		44	55	65	80	95
AE		40	55	65	80	95
AF		30	40	40	55	55
AG		117	146	186	220	255
AH		23	27	30	32	36
AI		12,5	14,5	17,5	19	23
AL		19	22,5	24,5	26	30
AM		7,5	10,5	11,5	13,5	16
AP		13	15,2	23	30	35,5
EE		G1/8"	G1/4"	G1/4"	G1/4"	G3/8"
L1		100	125	150	175	215
LA		200	250	300	350	430
RA		M4	M5	M5	M6	M6
RB		7,5	9,5	9,5	11,5	11,5
RT		M5	M6	M6	M8	M8
RV		13,5	16,5	16,5	20,5	20,5
TA		30	40	40	65	65
TB		80	110	110	160	160
TC		23	30	30	40	40
TD		27	36	47	54	68
TE		6,5	9,5	9	13	13,5
Weight	stroke 0	900	1650	2650	4330	8010
g	every 100mm	225	340	490	725	1070
STROKE TOLERANCE: + 2 mm.						

Overall dimensions and technical information are provided solely for informative purposes and may be modified without notice

Basic version cylinder

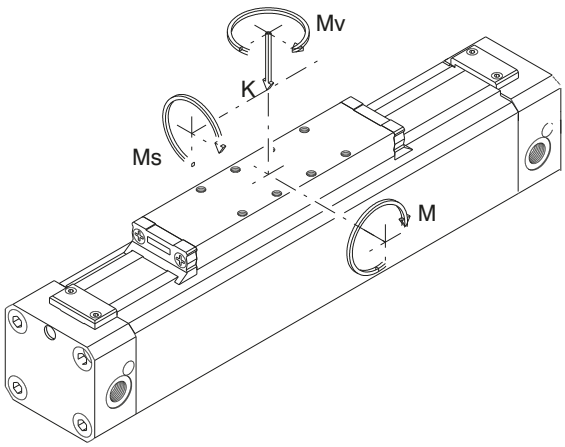

Operating end stroke decelerator diagram

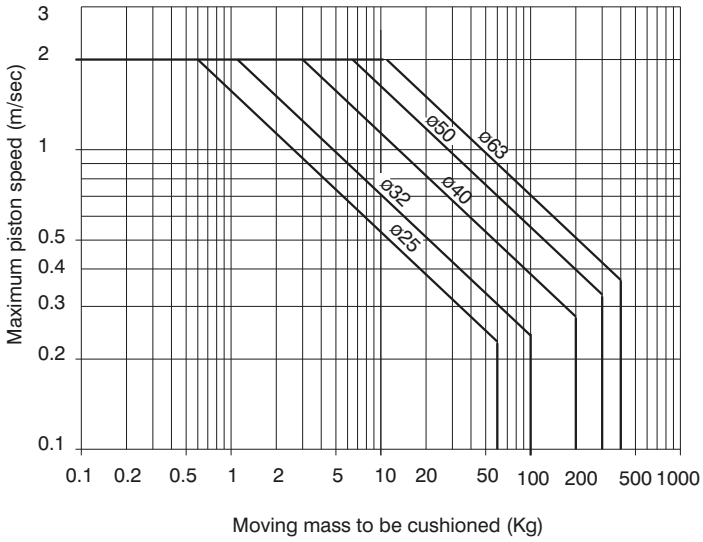

Recommended loads and moments in static conditions

CYLINDER BORE	DECELERATING STROKE (mm)	MAX. RECOMMENDED LOAD K (N)	MAX. RECOMMENDED BENDING MOMENT M (Nm)	MAX. RECOMMENDED CROSS MOMENT Ms (Nm)	MAX. RECOMMENDED TWISTING MOMENT Mv (Nm)
25	20	300	15	0.8	3
32	25	450	30	2.5	5
40	31	750	60	4.5	8
50	38	1200	115	7.5	15
63	49	1600	150	8.5	24

Attention: use guided carriage for heavier loads or precise linear movements (MG or MH versions).

All reported data are referred to carriage plane and indicates MAX - values in statical conditions. These values should not be exceeded either in dynamic conditions (best speed <1m/sec). Should the cylinder be utilised at its maximum performances, ensure the proper additional absorbers are used.

Calculation of permissible load (Kd) in dynamic conditions $Kd = K \cdot Cv$

Coefficient of velocity diagram

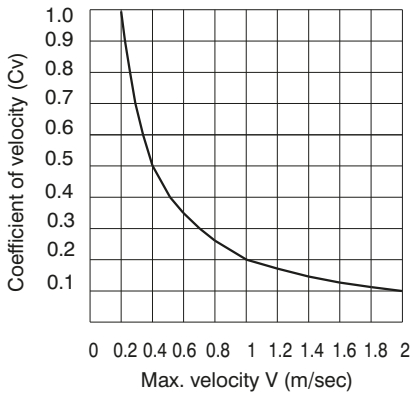

Loads under combined stressing conditions

It is important to take into consideration the following formula when there are a combination of forces with torque:

$$\left[\left(2 \times \frac{Ms}{Ms\ max}\right) + \left(1.5 \times \frac{Mv}{Mv\ max}\right) + \frac{M}{M\ max} + \frac{K}{K\ max}\right] \times \frac{100}{Cv} \leq 100$$

Overall dimensions and technical information are provided solely for informative purposes and may be modified without notice

Cylinder with linear control unit (Ø 25, Ø32, Ø40 and Ø50)

Ordering code
1605.Ø.stroke.01.MG (Max. stroke 3mt.)

Cylinders Ø 25

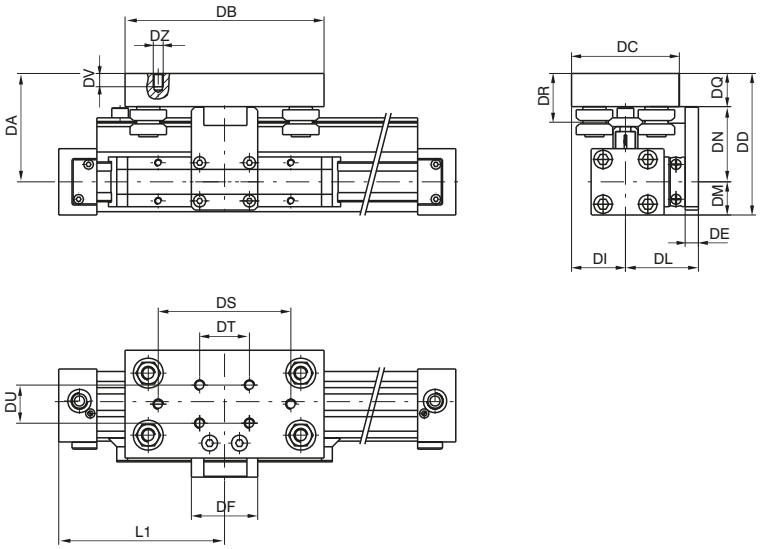

Cylinders Ø 32, Ø 40, Ø 50

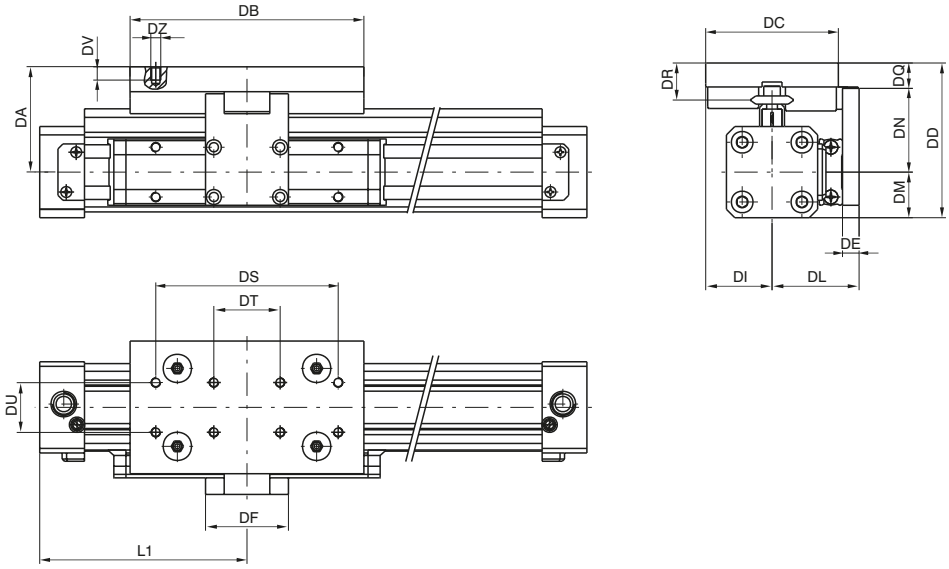

Bore	DA	DB	DC	DD	DE	DF	DI	DL	DM	DN	DQ	DR	DS	DT	DU	DV	DZ	L1	Weight guide	every 100mm
25	65	120	65	85	8	40	32,5	44	20	45,5	19,5	29	80	30	23	8	M6	100	g 850	g 90
32	63	141	80	90,5	10	50	40	52,5	27,5	48,5	14,5	21,5	110	40	30	8	M5	125	g 950	g 90
40	68,5	141	80	101	10	50	40	57,5	32,5	54	14,5	21,5	110	40	30	8	M5	150	g 950	g 90
50	76	141	80	116	12	80	40	70	40	61,5	14,5	21,5	110	40	30	8	M5	175	g 950	g 90

For cylinder weight refer to base version

Construction characteristics of linear control unit

Rod	carbon steel with hardness higher than 55-60 HRC
Bearing with shaft	shielded bearing with shaped ring
Carriage plate	anodised aluminium
Cover	acetal resin

Overall dimensions and technical information are provided solely for informative purposes and may be modified without notice

Cylinders with linear control unit Ø32, Ø40 and Ø50

Max. suggested loads and moments

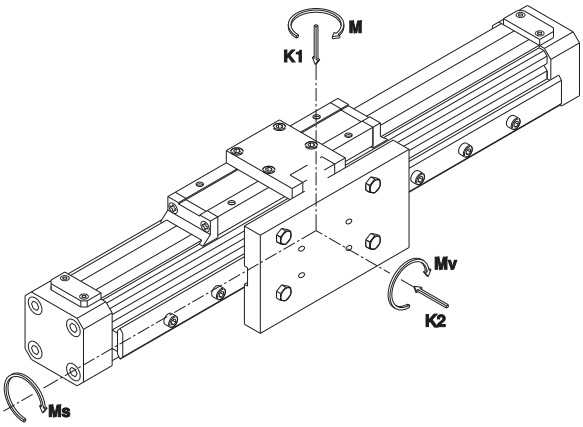

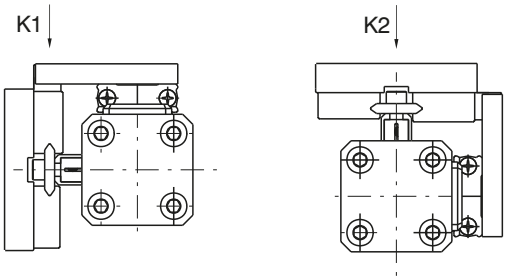

K1 (N)	K2 (N)	M (Nm)	Ms (Nm)	Mv (Nm)
960	960	40	12	40

Max. load (K1 o K2) depending on the distance LC between the supports

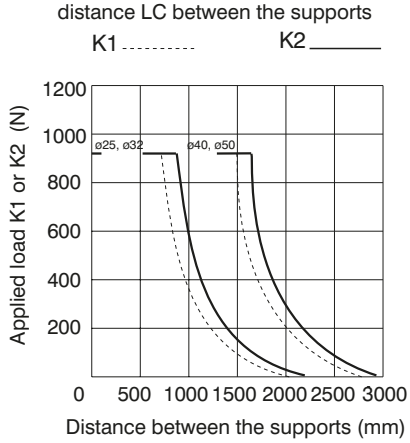

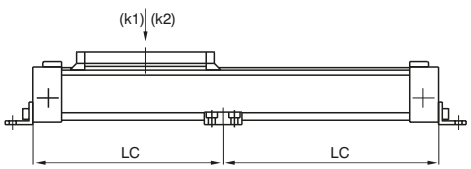

Real load (CE) under combined stressing conditions

It is important to take into consideration the following formula when there are a combination of forces with torque :

$$CE = \left[K1 + K2 + (24 \times M) + (80 \times Ms) + (24 \times Mv)\right] \leq 960$$

Nomograph load / life

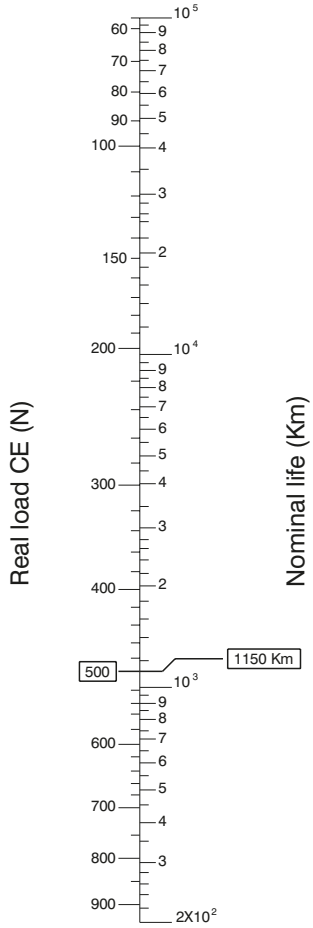

All data refers to a linear control unit properly lubricated with linear speed < di 1.5 m/s

Example to compute the life

Compute the linear control unit life with a load of 100 N applied 50 mm off its axle.

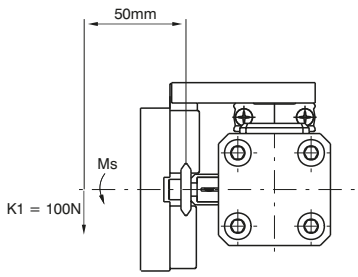

Ms = 0,05 x 100 = 5 Nm K1 = 100 N

How to compute the real load using the formula:

$$CE = \left[K1 + K2 + (24 \times M) + (80 \times Ms) + (24 \times Mv)\right]$$

$$CE = \left[100 + 0 + (24 \times 0) + (80 \times 5) + (24 \times 0)\right] = 500N$$

After having verified that the CE is lower than 960 N we realise that the life is 1150 Km from the nomograph.

Overall dimensions and technical information are provided solely for informative purposes and may be modified without notice

Cylinder with sliding shoes guide (Ø 25, Ø 32, Ø 40, Ø 50 and Ø 63)

Ordering code
1605.Ø.stroke.01.MH

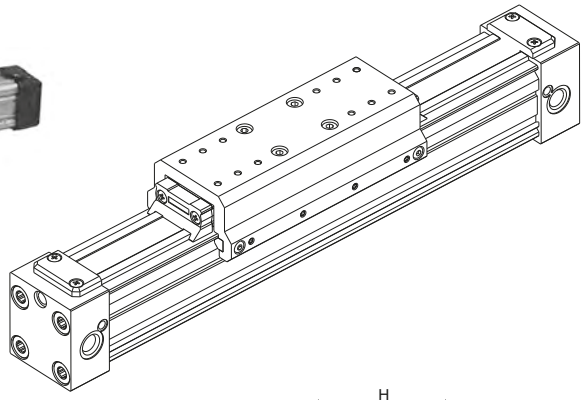

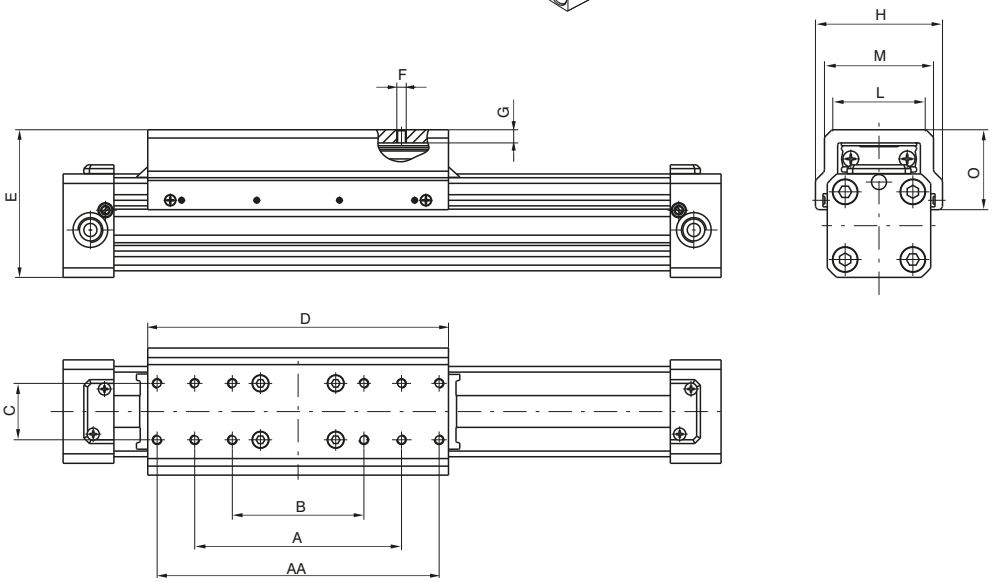

Bore	AA	A	B	C	D	E	F	G	H	L	M	O	Weight g
Ø25	/	80	55	23	130	64 $^{\pm 1}$	M4	6,5	57	36	42	32	g 235
Ø32	/	110	70	30	160	78,5 $^{\pm 1}$	M5	7	68	50	58	42,5	g 445
Ø40	/	110	70	30	202	88,5 $^{\pm 1}$	M5	7	77	52	60	45,5	g 595
Ø50	210	160	110	40	235	114,5 $^{\pm 1}$	M6	14	100	71	83	61,5	g 1453
Ø63	210	160	110	40	270	130 $^{\pm 1}$	M6	14	116	76	90	65,5	g 1810

For cylinders weight refer to base version

Complete sliding shoes guide

Ordering code
1600.Ø.05F

Construction characteristics of guide

Sliding shoes guide	reinforced carbon fibre nylon
Mounting plate	extruded anodised aluminium

Cylinder with sliding shoes guide ø25, ø32, ø40, ø50 and ø63

Max. suggested loads and moments

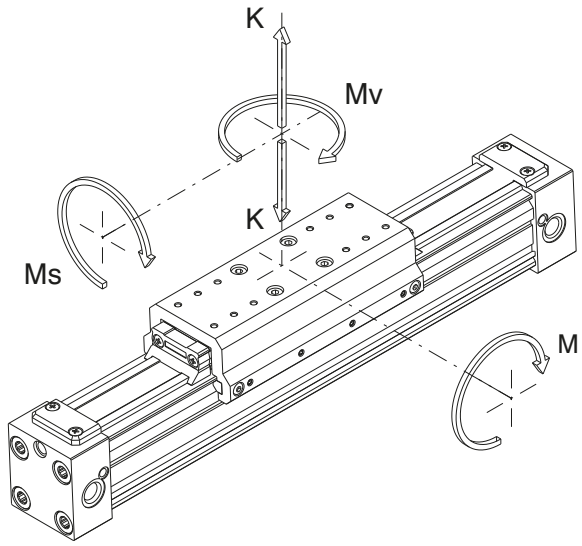

Recommended loads and moments in static conditions

CYLIDER BORE	MAX RECOMMENDED LOAD K (N)	MAX RECOMMENDED BENDING MOMENT M (Nm)	MAX RECOMMENDED CROSS MOMENT Ms (Nm)	MAX RECOMMENDED CROSS MOMENT Ms (Nm)
ø 25	300	20	1	4
ø 32	450	35	3	6
ø 40	750	70	5	9
ø 50	1200	120	8	16
ø 63	1600	155	9	25

Overall dimensions and technical information are provided solely for informative purposes and may be modified without notice

Sensor brackets codes 1600._, SRS._, SHS._

Ordering code
1600.A

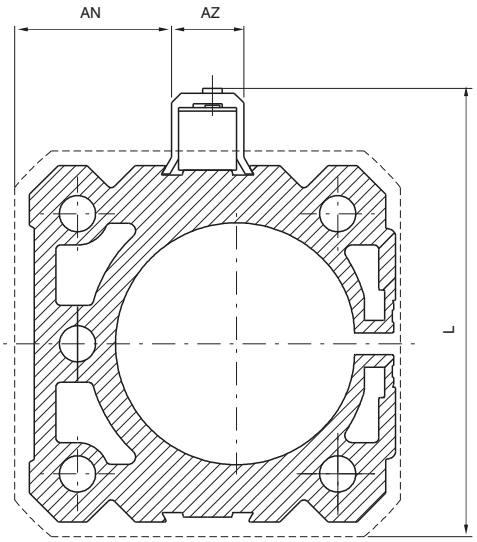

Bore		25	32	40	50	63
AN		12,5	20	25	32,5	40
AZ		15	15	15	15	15
L		55	68	79	94	110
LB		45	58	69	84	100
Weight g	1600.A	3	3	3	3	3
	1600.B	1	1	1	1	1

Sensor brackets codes 1580._, MRS._, MHS._

Ordering code
1600.B

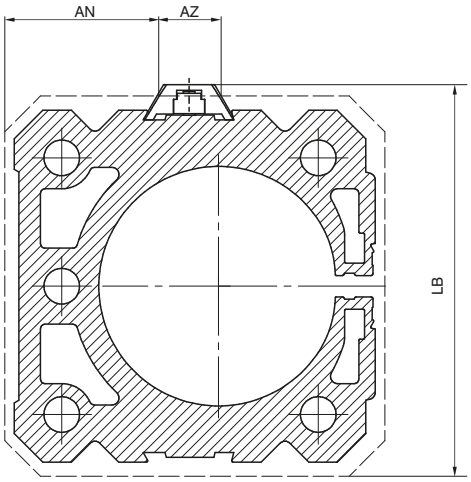

Sensors

For technical characteristics and ordering codes see magnetic sensors section

Instruction on how to use the sensors properly

Particular attention must be paid not to exceed the working limits listed in the tables and that the sensor is never connected to the mains without a load connected in series; these are the only measures that if not observed can put the circuits out of order.
In the case of direct current (D.C.) connection polarities must be respected, that is the brown wire to the positive load (+) and the blue to the negative (-). If these are inverted the sensor remains switched, the load connected and the led turned off. However, this would not damage the circuit.
For the "U" type sensors attention must be paid that the length of the cable doesn't exceed 8 metres, with tension above 100 V. In this case a serial resistance is added to reduce the cumulative effects of the line.
As an example 1000 W per 100-130 V e 2000 W per 200-240 V.

Foot

Ordering code
1600.Ø.01F (1 piece)

Bore
25 - 32

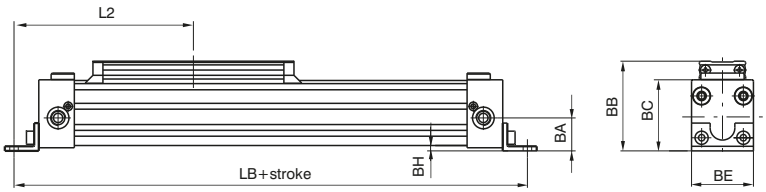

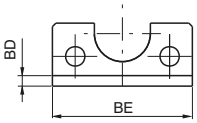

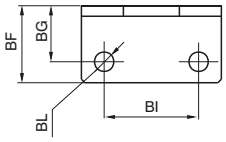

Bore	25	32	40	50	63
BA	21,5	28	32,5	41	49
BB	58	72,5	81,5	100	116
BC	46	57,5	66,5	82	97,5
BD	3	3	20	25	30
BE	40	55	65	80	95
BF	22	25	25	25	30
BG	16	18	12,5	12,5	15
BH	3,5	6	4,5	5	5
BI	27	36	30	40	48
BL	5,5	6,6	9	9	11
L2	116	143	162,5	187,5	230
LB	232	286	32,5	375	460
Weight g	30	45	65	110	190

Bore
40 - 50 - 63

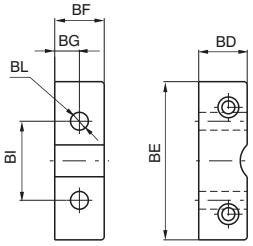

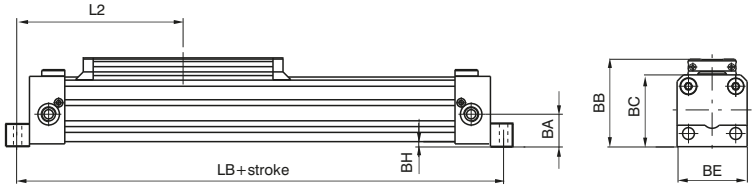

Overall dimensions and technical information are provided solely for informative purposes and may be modified without notice

Intermediate support

Ordering code
1600.Ø.02F

Bore
25 - 32

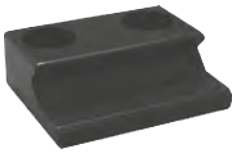

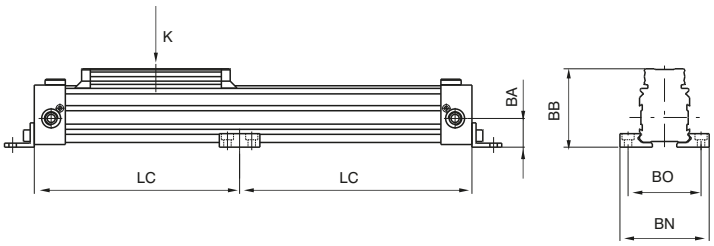

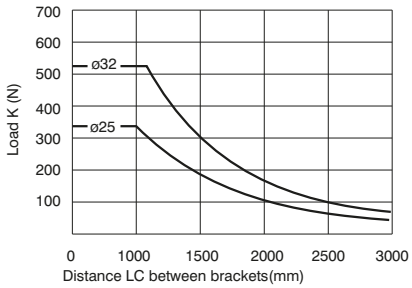

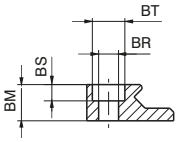

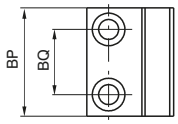

Bore	25	32	40	50	63
BA	21,5	28	32,5	41	49
BB	58	72,5	81,5	100	116
BM	10	18	18	25	30
BN	66	86	96	120	140
BO	54	70	80	100	120
BP	30	40	40	50	50
BQ	18	25	25	32	32
BR	5,5	6,6	6,6	9	9
BS	4,5	5,5	5,5	7,5	7,5
BT	9	11	11	15	15
Weight g	25	80	80	160	215

Bore
40 - 50 - 63

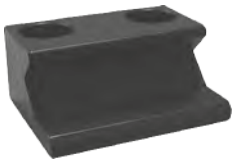

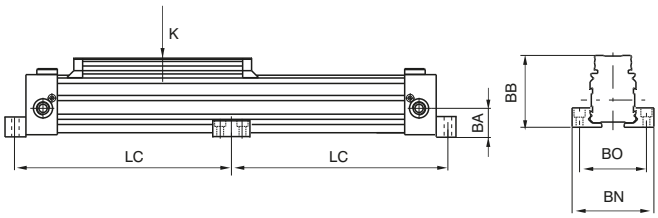

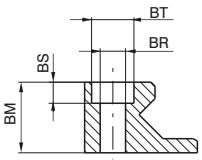

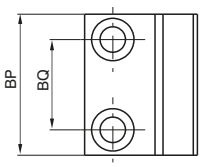

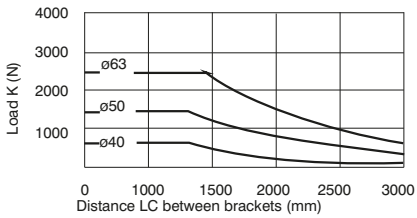

Oscillating hinge

Ordering code
1600.Ø.03F

Bore
25 - 32

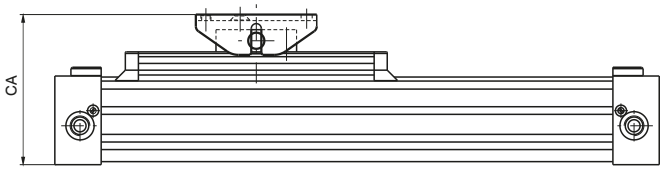

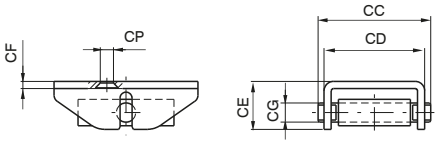

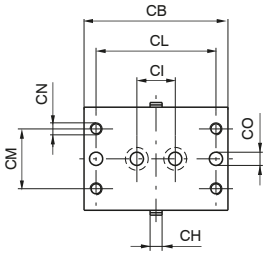

Bore	25	32	40	50	63
CA (±5,5)	76	99,5	108,5	135,5	151
CB	60	100	100	120	120
CC	47	64	64	92	92
CD (±5)	42	56	56	80	80
CE	20	30	30	42	42
CF	3	4	4	6	6
CG	8	12	12	16	16
CH	5	8	8	10	10
CI	16	40	40	65	65
CL	50	80	80	100	100
CM	25	30	30	47	47
CN	M5	M6	M6	M8	M8
CO	5,5	6,5	6,5	9	9
CP	5,5	7	7	-	-
Weight g	130	380	380	990	990

Bore
40 - 50 - 63

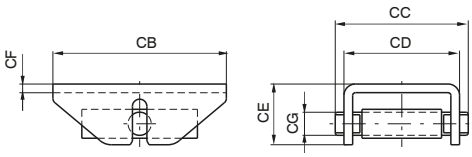

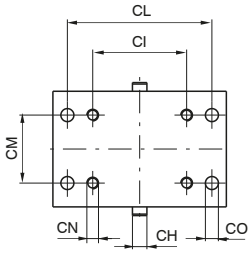

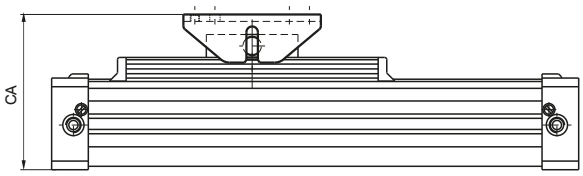

Overall dimensions and technical information are provided solely for informative purposes and may be modified without notice

Series 1600, Mechanically coupled cylinders Ø16

General

Mechanically coupled cylinder based on the stainless steel strip sealing technology widely used and tested on bigger bore sizes.
Available versions: sliding shoe as standard ("MH").
This system ensures high resistance and long life as the carriage which supports the weight is not tied to the piston and therefore the piston only transfers the movement without bearing any force.
Air connections: M5 threaded connections.
All air connections on one end cap version available. (side-back-bottom side)
Mountings:
- Foot brackets and intermediate supports if needed (depending on the stroke)
- Swivel bracket
- Directly in position via the slot on the end caps- in this conditions the air supply can come directly from the mounting plate.

Magnetic sensors: sensors series (1590.... , LRS.... and LHS....) can be used directly in the 2 slots on the barrel.

Construction characteristics

End cap	Anodised aluminium
Barrel	Anodised aluminium
Bands	Stainless steel
External carriage	Anodised aluminium
Sliding bushes	Special technopolymer
Piston	Acetal resin
Cushion bearings	Aluminium
Piston seals	Special NBR
Other seals	NBR

Technical characteristics

Fluid	Filtered air. No lubrication needed, if applied it shall be continuous.
Working pressure	1,5 - 8 bar
Working temperature	-5°C - +70°C
Max. speed	1 m/s (normal working conditions)
Max. stroke	2,5 meters
Cushioning length	18 mm

Please follow the suggestions below to ensure a long life for these cylinders:
- use clean and lubricated air
- Please adequately evaluate the load involved and its direction, especially in respect to the moving carriage (also see tables for loads and admitted moments).
- avoid high speeds together with long strokes and heavy loads: this would produce kinetic energy which the cylinder cannot absorb, especially if used as a limit stop (in this case use mechanical stop device)
- evaluate the environmental characteristics of cylinder used (high temperature, hard atmosphere, dust, humidity etc.)

Please note: air must be dried for applications with lower temperature.
Use hydraulic oils H class (ISO VG32) for correct continued lubrication.
Our Technical Department will be glad to help.

For applications where a low smooth uniform operations speed is required, you must specify this on your purchase order so that we can use the proper special grease.

Use and maintenance

This type of cylinder, due to its characteristics, has to be used within certain criteria. Correct use will give long and troublefree operation. Filtered and lubricated compressed air reduce seal wear. Verify that the load will not produce unforeseen stresses. Never combine high speed with heavy load. Always support the long stroke cylinder with intermediate brackets and never exceed the specified working conditions.
If maintenance is required, follow the instructions supplied with the repair kit.

Basic version (cylinder with sliding shoes bushes)

Ordering code
1605.16.stroke.01.MH
Possibility of a single feed cylinder head
1605.16.stroke.02.MH left end cap-side connection
1605.16.stroke.03.MH right end cap-side connection
1605.16.stroke.04.MH left end cap-rear connection*
1605.16.stroke.05.MH right end cap-rear connection*
1605.16.stroke.06.MH left end cap-bottom connection
1605.16.stroke.07.MH right end cap-bottom connection

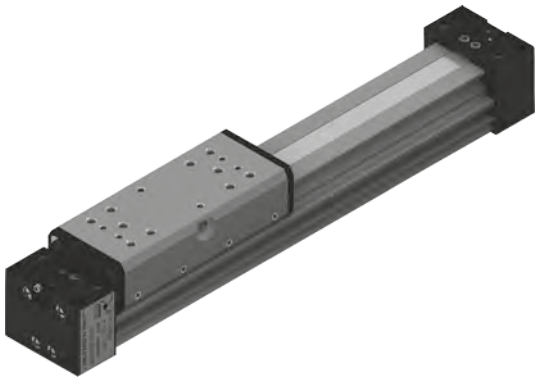

* in case of mounting with 1600.16.01F bracket use 4mm tube fitting

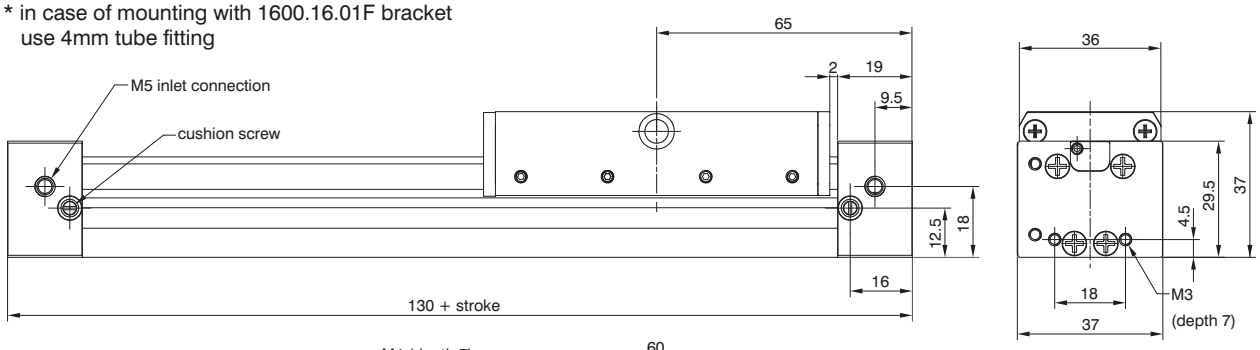

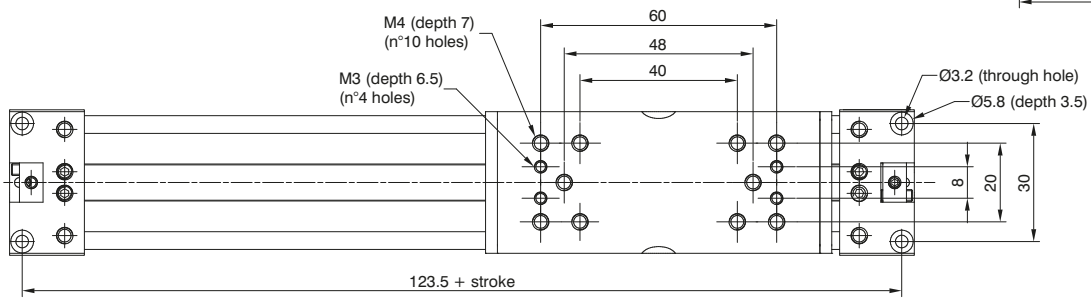

Possibility of a single feed right or left cylinder head and on 3 different end cap sides

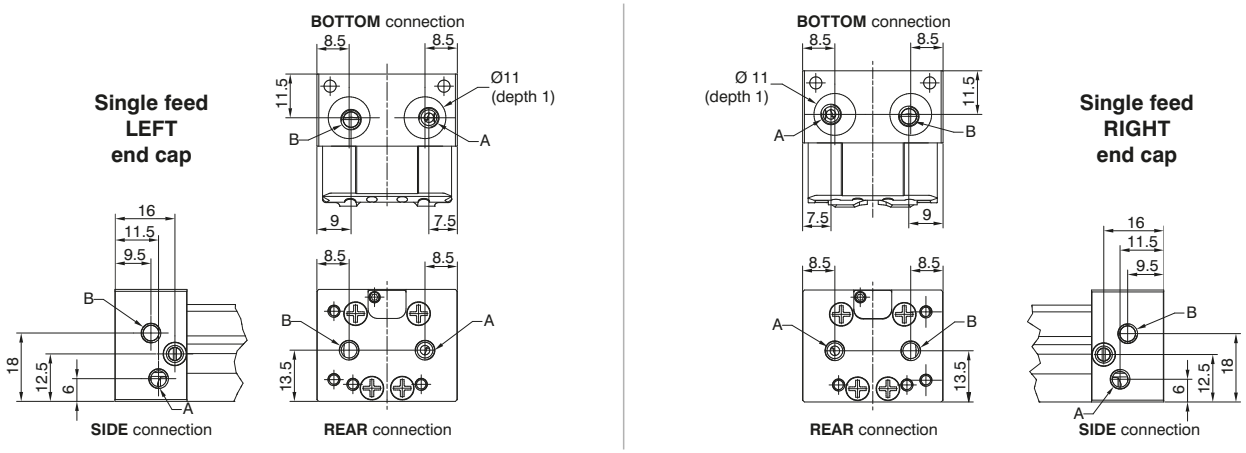

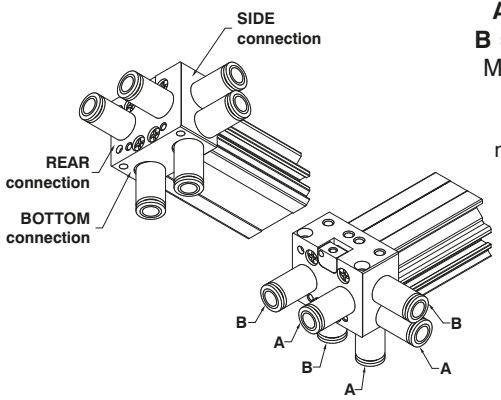

A = forward stroke connection
B = backwards stroke connection
M5 tube Ø4 and Ø6 fittings can be used for air connections.
In case of use with 1600.16.01F mounting and REAR air connections use a 4mm pipe fitting.

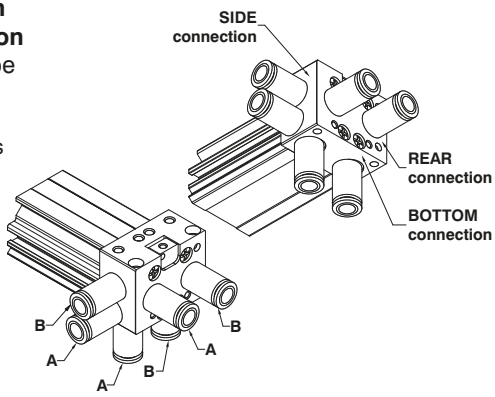

Overall dimensions and technical information are provided solely for informative purposes and may be modified without notice

Operating end stroke decelerator diagram

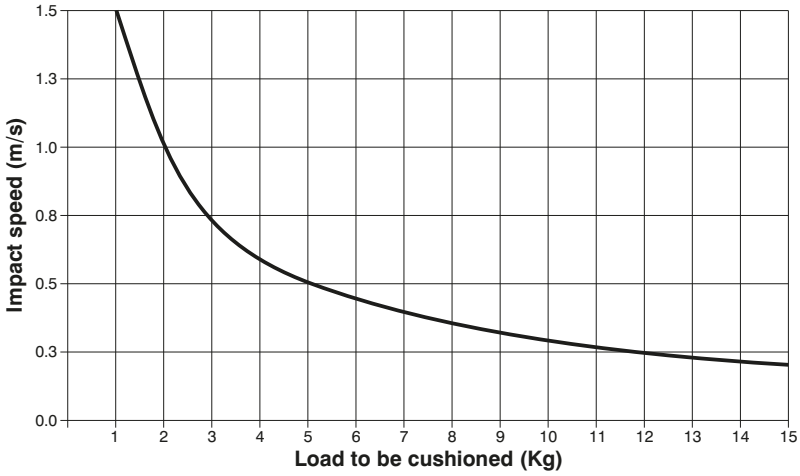

In case of extreme applications close to the maximum allowed values in the graph it is strongly recommended to ad external damping systems.

Suggested loads and moments

K1	K2	K	M	Ms	Mv
200	250	100	10	2	3
(N)			*(Nm)*		

Maximum Load and moments allowed in static or dynamic conditions (max. speed 0,2 m/s)

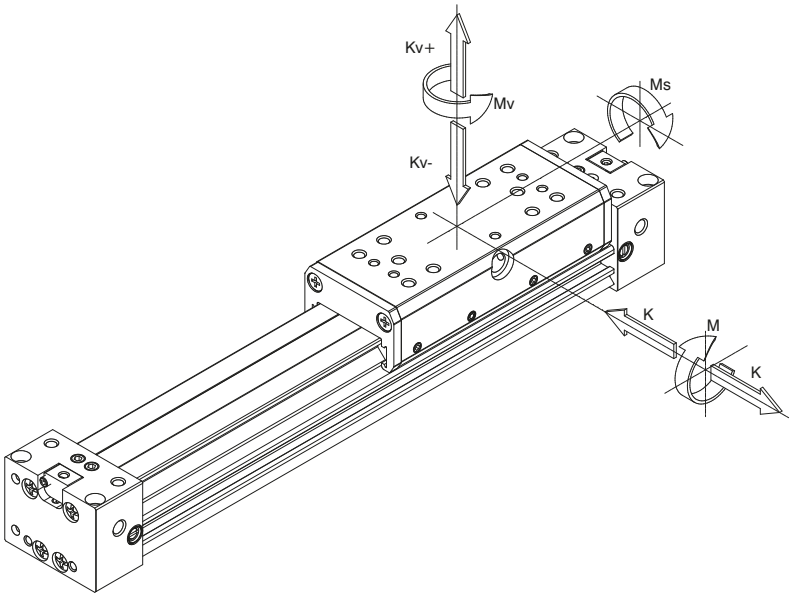

Magnetic sensors

Ordering code
1590... **LRS...** **LHS...**

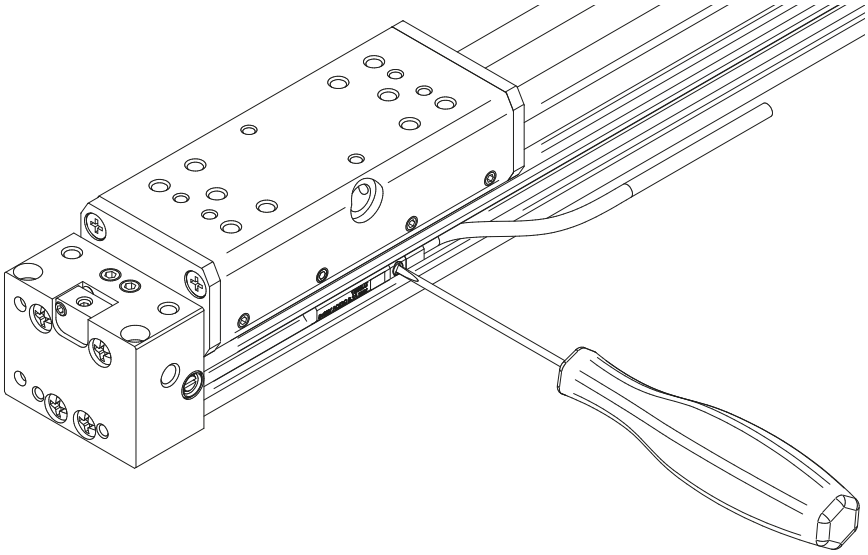

The two side slots allow the direct use of 1590....LRS... and LHS... sensors mounted from the top and positioned via the built in screw.

Mounting foot brackets

Ordering code
1600.16.01F (1 piece)

The kit comprises:
n°1 foot (plated zinc steel)
n°2 screws (plated zinc steel)

Attention: based on the stroke evaluate the need to use also side mounted supports. (see below)

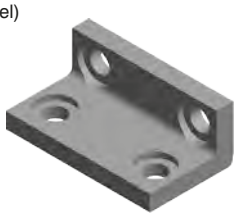

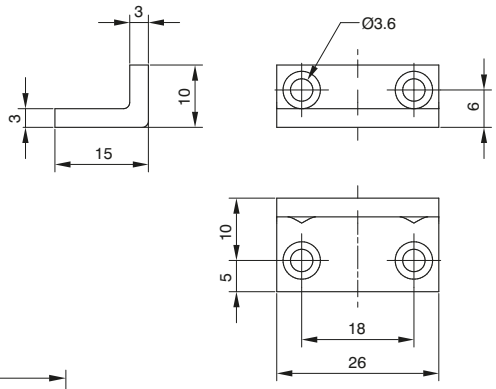

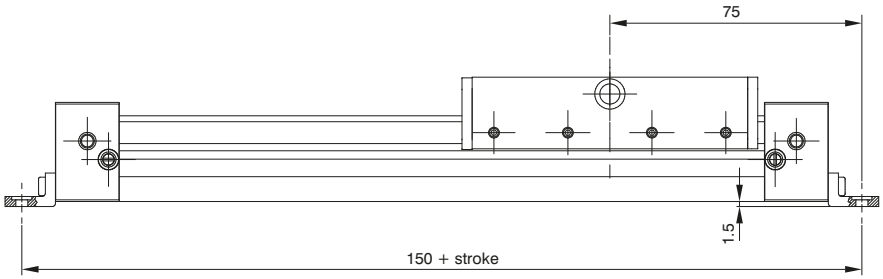

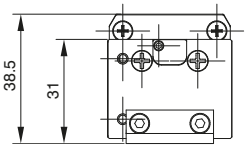

Intermediate support

Ordering code
1600.16.02F (1 piece)

The kit comprises:
n°1 support (aluminium)
n°2 screws (plated zinc steel)

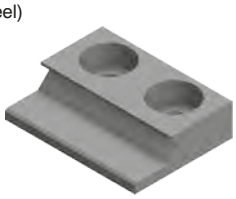

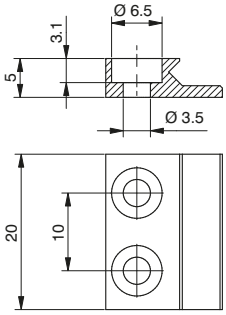

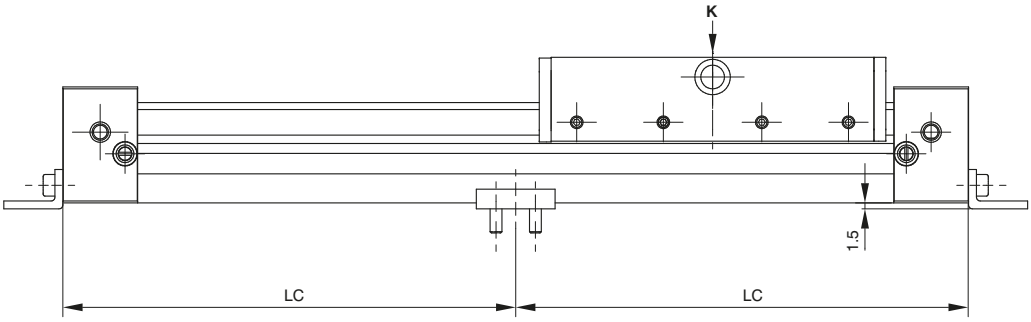

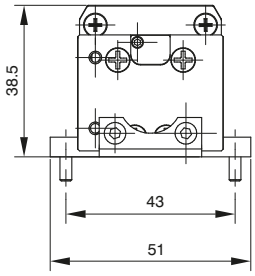

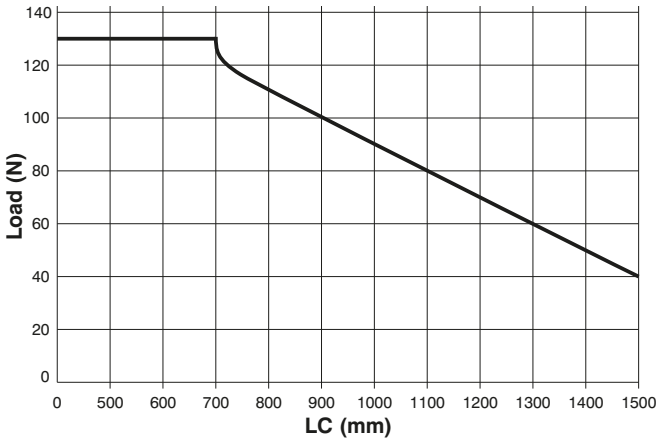

The graph shows the LC limit in conjunction with the applied load K beyond which it is necessaryto mount an intermediate side support in order to prevent the barrel from bending.

Overall dimensions and technical information are provided solely for informative purposes and may be modified without notice

Oscillating hinge

Ordering code
1600.16.03F (1 piece)

The kit comprises:
n°2 pins (plated zinc steel)
n°2 grub screw (steel)
n°1 oscillating hinge (plated zinc steel)

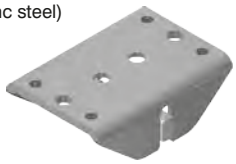

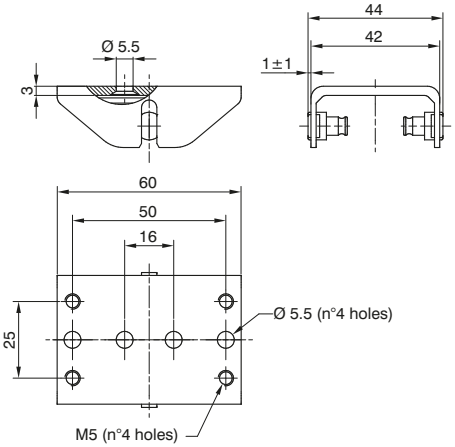

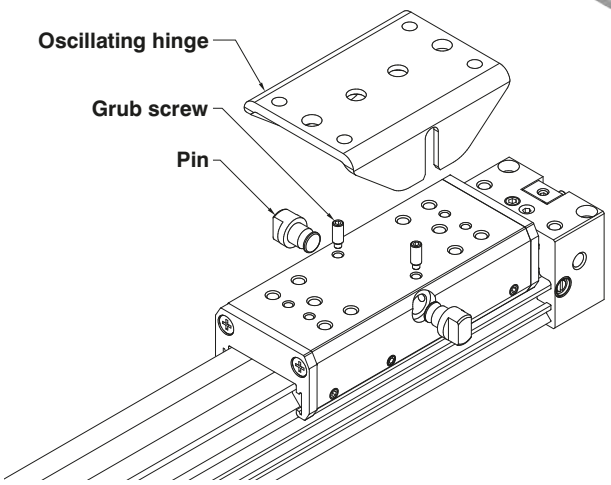

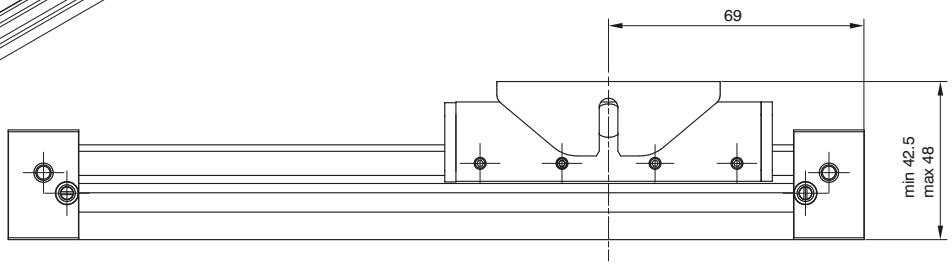

mounting sequence:
- mount the pin into the dedicated housing
- tighten the blocking grub screws in the dedicated housing

Direct mounting without brackets

Ordering code
1600.16.04F (1 piece)

The kit comprises:
n°4 screws M3x35 (plated zinc steel)
n°2 O-Rings (NBR)

Direct mounting without brackets
Thanks to the mounting holes with counter bores on the end caps it is possible to mount the cylinder directly onto the mounting surface. Having the end caps and barrel flush and in contact with the mounting plate it is not necessary to use any intermediate mounting brackets even in case of long strokes. It is also possible to supply air to the cylinder directly through the mounting plate through the two air connection on the bottom side of the end cap (06.MH and 07.MH) which are machined with counterbores.

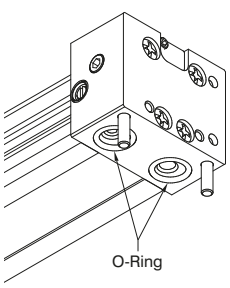

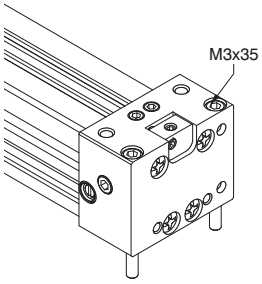

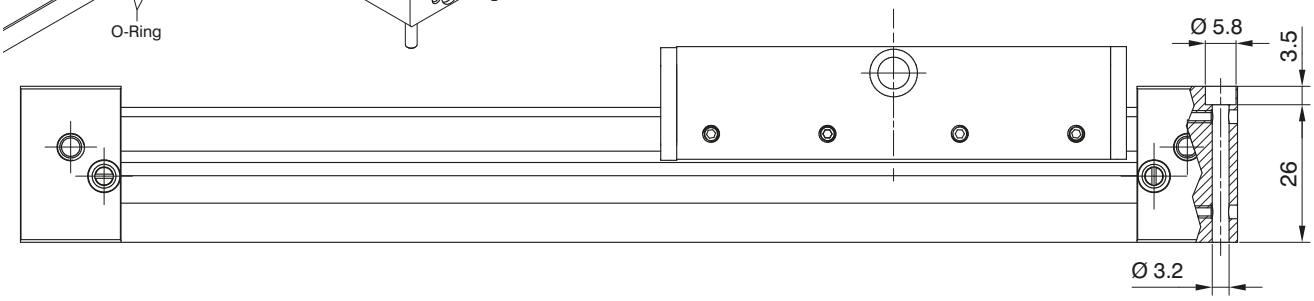

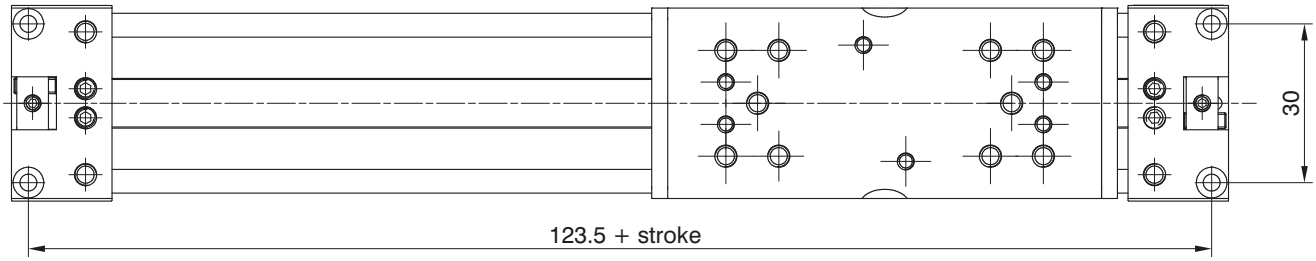

1600 Series, Cable driven cylinders

General

The cable driven cylinders work in a linear translation systems, they are very compact and can be used where a normal cylinder with a rigid rod is too cumbersome. The main characteristic of the cable cylinders is the absence of the rod which, in coming out of the end plate at the end of the stroke, doubles the total overall dimension of the cylinder. In the case of the cable cylinder, the rod is replaced by a metal rilsan-coated cable. It is connected to the piston and coming at the maximum point of stroke never exceeds the overall dimensions of the cylinder.
The cable is connected to the bracket with clamps which serve also to regulate the tension. Because of the construction characteristics of this type of cylinder it must be used with much care. The cable is capable of supporting large stress due to heavy load and high speed. Unfortunately, we cannot give definitive limits of use if not in presence of masses of a few kilograms to be translated (7 - 10 for 16 and 20 - 25 for Ø 25) with speed inversely proportional to the entity of the same load (max 0,5 m/sec). This is done in a way that the load always has a mechanical stop at the end of the stroke. The magnetic piston version lengthens the overall dimensions by 50 mm; the 1200 series microcylinder sensors are used along with the clips of that series.

Construction characteristics

End caps	anodised black aluminium	Piston seals	NBR 80 Shore (at lip)
Barrel	anodised aluminium	Cable seal	PUR
Piston	aluminium	Bracket	steel
Cable	steel	Cable clamps	brass
Cable covering	Rilsan	Pulleys	aluminium with ball bearing

Technical characteristics

Filtered air. No lubrication needed, if applied it shall be continuous.	Max. pressure:6 bar	Min. and max. temperature: -5°C - +70°C	Max speed: 0.5 m/sec.

"Attention: Dry air must be used for application below 0°C"

	A	B	C	D
Standard	111	132	86	124
Magnetic	161	182	136	174

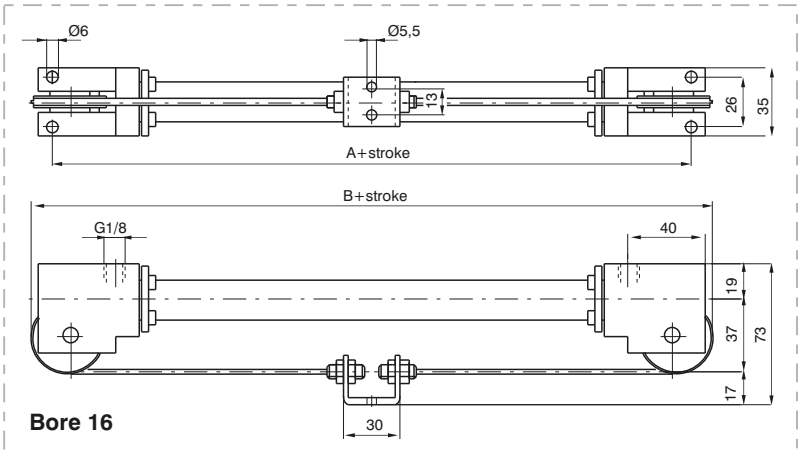

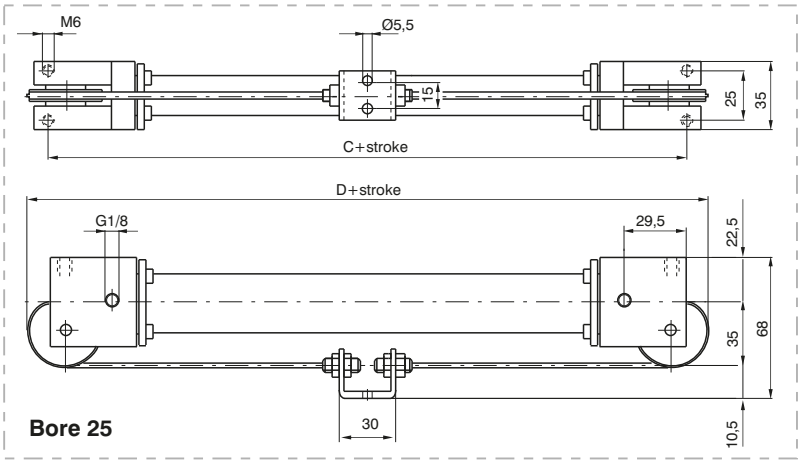

Ordering code
1601.Ø.stroke **1601.Ø.stroke.M** Version with magnetic piston

Maintenance

The cable is obviously the part most subject to breakage. The cylinder can be disassembled for replacement of the cable which is supplied already complete with threaded bushings to be screwed on to the piston. Once the wear of the barrel and seals has been checked, the cylinders can be reassembled by screwing on the end plates. Next, the ends of the cable are attached to the bracket by way of clamps and the tension regulated. The tension is correct when the cable is not cambered.

Overall dimensions and technical information are provided solely for informative purposes and may be modified without notice

Series 1330-1331-1332-1333, rotary actuators

Construction characteristics

End cap	UNI 5079 aluminium alloy casting
Central body	oxidised aluminium
Pinion	18 NiCrMo4 cemented and tempered
Rack	C43
Barrel	anodised aluminium Ra=0.3-0.5
Sliding shoe	acetal resin
Cushion bushings	hardened aluminium
Piston	vulcanized rubber block on steel core with incorporated permanent magnet or without magnet plus rear spacer for non magnetic version
Seals	NBR 80 shore rubber
Cushion adjustment screw	nickel plated steel
Rotating angle adjustment assy	nickel plated brass

Operational characteristics

Fluid	Filtered air. No lubrication needed, if applied it shall be continuous.
Max. pressure	10 bar
Working temperature	-5°C - +70°C
Standard rotation	90° - 180° - 270° - 360°(+1°)
Rotating angle adjustment assy	±10° (±5° start position, ±5° end position)

Please follow the suggestions below to ensure a long life for these cylinders:
- use clean and lubricated air
- correct alignment during assembly with regard to the applied load so as to avoid radial components or bending the rod.
- avoid high speeds together with long strokes and heavy loads: this would produce kinetic energy which the cylinder cannot absorb, especially if used as a limit stop (in this case use mechanical stop device)
- evaluate the environmental characteristics of cylinder used (high temperature, hard atmosphere, dust, humidity etc.)

Please note: air must be dried for applications with lower temperature.
Use hydraulic oils H class (ISO VG32) for correct continued lubrication.
Our Technical Department will be glad to help.

Bore	32	40	50	63	80	100
Torque moments Nm/bar	0,9	1,7	2,9	5,55	13,2	23,8
Axis load max. kg.	8	10	10	12	18	22
Cushioning angle	60°	60°	50°	50°	40°	40°

Female pinion version

Ordering code
1330.Ø.*.01 magnetic **1331.Ø.*.01** non magnetic **1330.Ø.*.01R** magnetic with rotating adjustment angle **1331.Ø.*.01R** non magnetic with rotating adjustment angle * = rotating angle

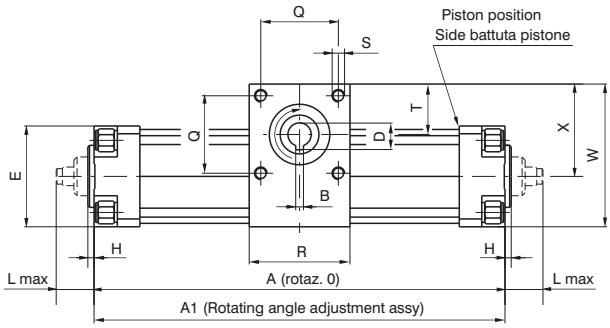

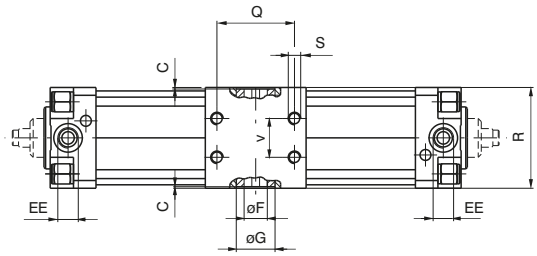

Male pinion version

Ordering code
1332.Ø.*.01 magnetic **1333.Ø.*.01** non magnetic **1332.Ø.*.01R** magnetic with rotating adjustment angle **1333.Ø.*.01R** non magnetic with rotating adjustment angle * = rotating angle

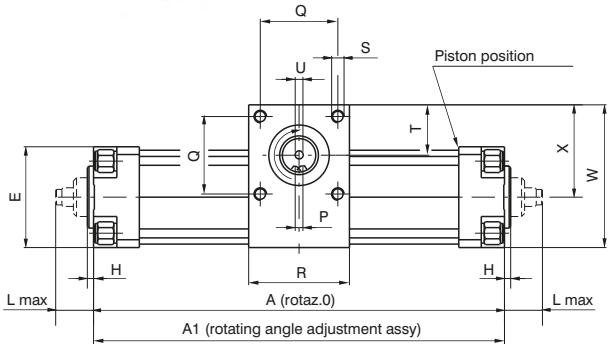

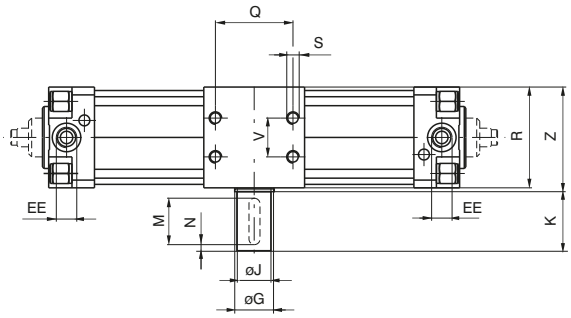

Overall dimensions and technical information are provided solely for informative purposes and may be modified without notice

Dimensions

Bore		32	40	50	63	80	100
A rot. 0°		171	195	202	233	268	300
A rot. 90°		218	252	265	308	378	427
A rot. 180°		265	308	328	382	488	555
A rot. 270°		312	364	390	457	598	682
A rot. 360°		359	421	453	531	708	809
A1 rot. 0°		174	198	206	237	274	307
A1rot. 90°		221	255	269	312	384	434
A1 rot. 180°		268	311	332	386	494	562
A1 rot. 270°		315	367	394	461	604	689
A1 rot. 360°		362	424	457	535	714	816
B		5	5	5	6	6	8
C		1	1	1	1	1	1
D		17,3	17,3	17,3	20,8	22,8	28,3
E		46	52	65	75	95	115
Ø F (H 7)		15	15	15	18	20	25
Ø G		25	25	25	30	40	55
H		4	4	4	4	4	4
Ø J (h 7)		14	14	22	25	30	35
K		30	30	40	40	50	50
L max.		23	23	28,5	28,5	34,5	34,5
M		25	25	35	35	45	45
N		2,5	2,5	2,5	2,5	2,5	2,5
P		5	5	6	8	8	10
Q		33	40	50	60	80	80
R		50	60	65	75	100	115
S		M6	M6	M8	M8	M10	M10
T		27,5	35	32,5	35,5	50	54,5
U		M5	M5	M6	M8	M8	M10
V		18	22	25	35	50	60
W		71	85	92	105	141	162
X		48	59	59,5	67,5	93,5	104,5
Z		51	61	66	76	101	116
EE		G 1/8"	G 1/4"	G 1/4"	G 3/8"	G 3/8"	G 1/2"
Piston stroke every 10 ° of rotation		2,61	3,14	3,49	4,14	6,11	7,07
Female Pinion weight g	rot. 90°	1450	2020	3050	4850	10000	14900
	rot. 180°	1600	2240	3350	5350	11000	16350
	rot. 270°	1750	2460	3650	5850	12000	17800
	rot. 360°	1900	2680	3950	6350	13000	19250
Male Pinion weight g	rot. 90°	1550	2150	3280	5150	10500	15700
	rot. 180°	1700	2370	3580	5650	11500	17150
	rot. 270°	1850	2590	3880	6150	12500	18600
	rot. 360°	2000	2810	4180	6650	13500	20050

Magnetic sensors

Sensors 1500._, RS._, HS._ series
Mounting brackets codes 1320._(A, B, C)

Sensor brackets

Sensor brackets codes 1500._, RS._, HS._	Sensor brackets codes 1595.HAP	Bore	L
Code	Code		
1320.A	1320.ASC	Ø32	60
		Ø40	65
1320.B	1320.BSC	Ø50	77
		Ø63	87
1320.C	1320.CSC	Ø80	105
		Ø100	125
1320.D	1320.DSC	Ø125	145
1320.E	1320.ESC	Ø160	184
1320.F	1320.FSC	Ø200	222

Sensor brackets codes 1580._, MRS._, MHS._		
Code	Bore	L1
1320.AS	Ø32	48
	Ø40	54
1320.BS	Ø50	66
	Ø63	76
1320.CS	Ø80	96
	Ø100	112
1320.DSC	Ø125	145
1320.ESC	Ø160	184
1320.FSC	Ø200	222

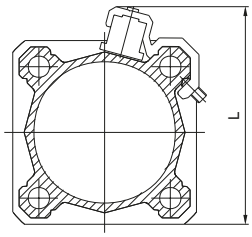

Sensors 1500._,RS._,HS._

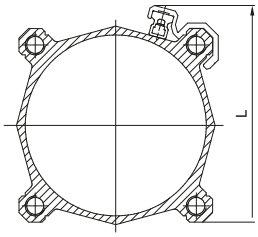

Sensors 1595.HAP

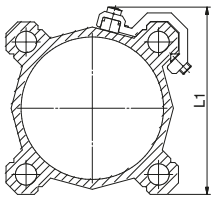

Sensors 1580._, MRS._, MHS._

Sensors for microbore cylinders: for technical characteristics and ordering codes see "Magnetic sensors" section

Solenoid valves supports

This accessory permits to mount a valve or an electrovalve on a side of the cylinder. The plate can be fitted on the cylinder profiled barrel, and, on it, can be mounted either a threaded distributor or a base on whic can be mounted an ISO distributor. Once installed the connections must be done with fittings and pipes. All of the threaded holes on the support plate are dedicated to different valves series as per attached drawing.

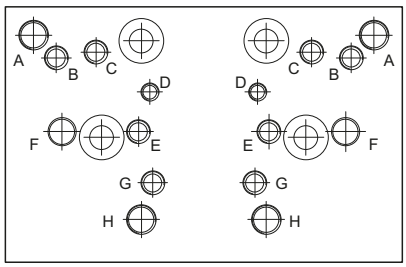

Fixing holes for valves series:

A = 414/2
B = 824
C = 828, T488, 488, 484
D = 2400
E = 2600
F = Bases for ISO distributors
G = 858/2
H = T424

Ordering code
1320.15 (Ø32 - Ø40) **1320.16** (Ø50 - Ø63) **1320.17** (Ø80 - Ø100) **1320.18** (Ø125) **1320.19** (Ø160) **1320.20** (Ø200)

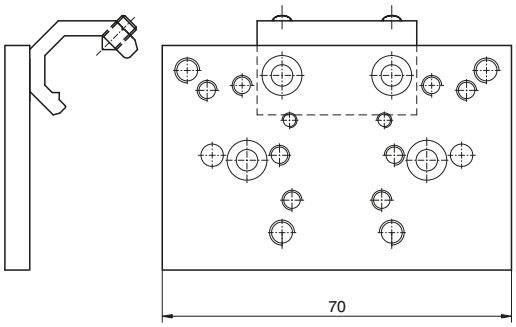

Bases for ISO solenoid valves

Ordering code

1320.21	bases for ISO 1 solenoid valves
1320.22	bases for ISO 2 solenoid valves

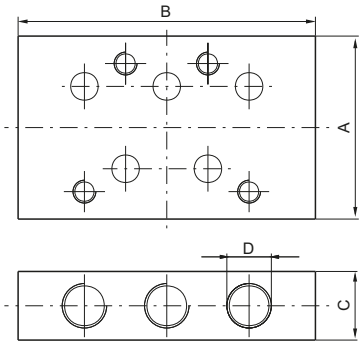

		Dimensions			
		A	B	C	D
1320.21	bases for ISO 1 solenoid valves	40	75	15	G 1/8"
1320.22	bases for ISO 2 solenoid valves	50	95	20	G 1/4"

Overall dimensions and technical information are provided solely for informative purposes and may be modified without notice

Series 6400 - Rotary actuators

General

These rotary actuators convert linear motion of a piston into a rotary motion via a rack and pinion device, using a single pinion-rack system for the 6411 version and a double system on 6400 versions. The 6410 series actuators have fixed stops at 90 and 180 degrees; while on the 6400 series, rotation can be adjusted between 0 and 190 degrees using variable stops that can also be substituted with hydraulic stoppers (shock absorbers). These devices are equipped with a rotating table upon which the load is fixed.

Double rack rotary actuators with turn table

Ordering code

6400. _ . _

- **A** = Standard
- **R** = Cushioning (shock absorber)

- **10** (piston ø15)
- **30** (piston ø20)
- **50** (piston ø25)
- **100** (piston ø32)
- **200** (piston ø40)

Construction characteristics

Body	anodised aluminium
End cap	anodised aluminium
Piston seal	NBR rubber
Pinion	steel
Rack	steel
Turn table	anodised aluminium
Cushioning	elastic bumper (hydraulic damper available on request)

Operational characteristics

Fluid	Filtered air. No lubrication needed, if applied it shall be continuous.)
Max. pressure	10 bar (for type 100 and 200, 6 bar)
Working temperature	-5°C - +70°C
Rotation angle range	0 - 190°
Max. rotation	190°
Rotation speed	s/90° (see rotation time table)

Overall dimensions and technical information are provided solely for informative purposes and may be modified without notice

Overall dimensions

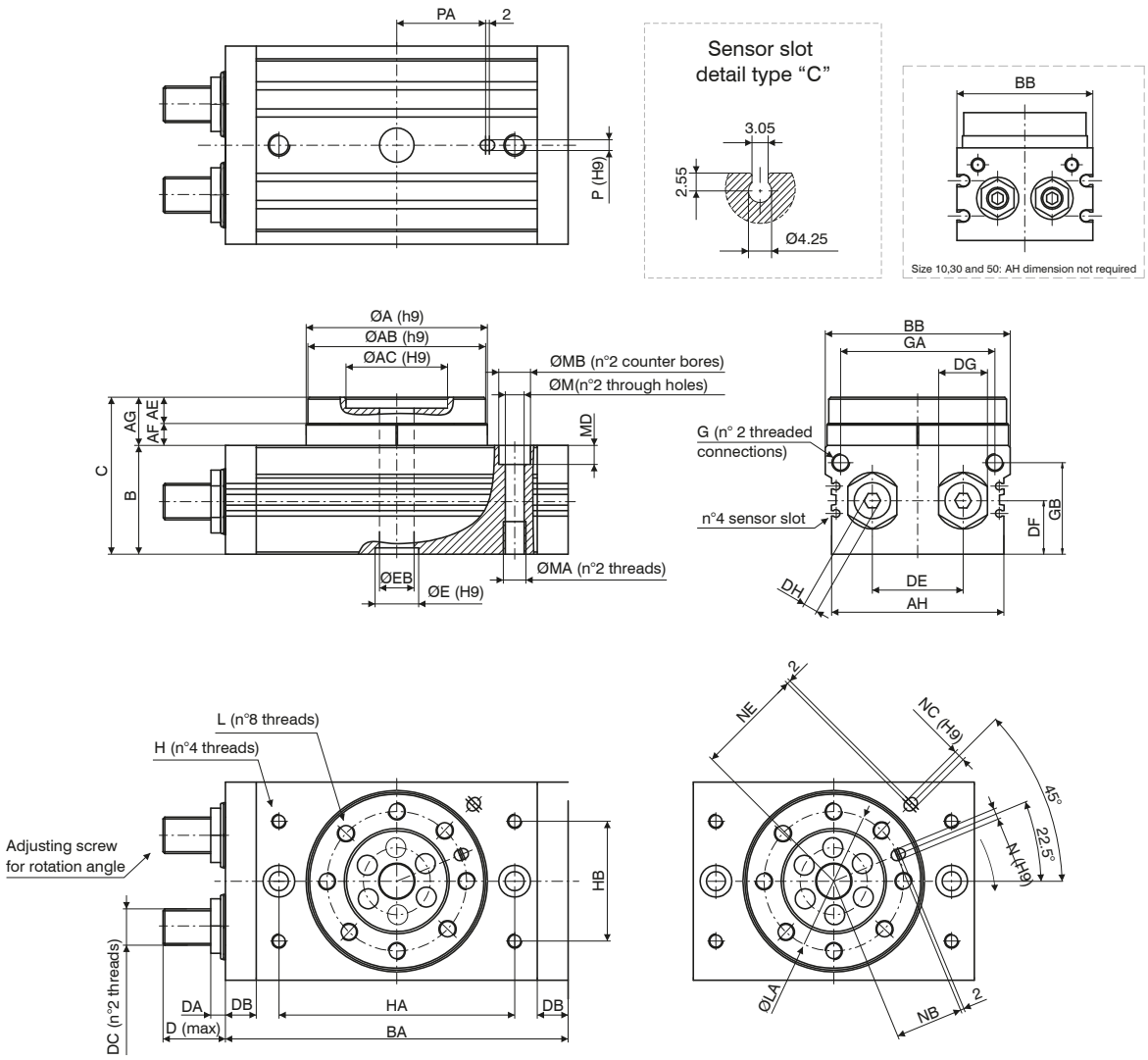

Size		10	30	50	100	200
Ø piston		Ø15	Ø21	Ø25	Ø32	Ø40
ØA h9		46	67	77	100	118
ØAB h9		45	65	75	98	116
ØAC H9		20	32	35	56	64
	Useful depth	4	4,5	5	6	9
AE		8	10	12	14,5	16,5
AF		5	7	8	12,5	15,5
AG		13	17	20	27	32
AH		/	/	/	95	114
B +0,5 / 0		34	40	46	59	74
BA		92	127	152	189	240
BB +0,5 / 0		50	70	80	102	120
C +0,5 / 0		47	57	66	86	106
D		17,7	25	31,4	34,3	40,2
DA		8,6	10,6	14	8	20
DB		9,5	12	15,5	17	24
DC		M8x1	M10x1	M14x1,5	M20x1,5	M27x1,5
DE		20	29	38	50	60
DF		15,5	18,5	22	29,5	36,5
DG		12	14	19	27	36
DH		4	5	6	8	10
ØE H9		15	22	26	24	32
	Useful depth	3	3	3	3,5	5,5
ØEB		5	9	10	19	24
G		M5x0,8	G1/8	G1/8	G1/8	G1/8

Size		10	30	50	100	200
Ø piston		Ø15	Ø21	Ø25	Ø32	Ø40
GA		34,5	50	63	85	103
GB		27,8	32	37,5	50,5	65,5
H		M5x0,8	M6x1	M8x1,25	M8x1,25	M12x1,75
	Useful depth	8	8	8	10	13
HA		60	84	100	130	150
HB		27	37	50	66	80
L		M5x0,8	M6x1	M8x1,25	M10x1,5	M12x1,75
	Useful depth	8	10	12	14,5	16,5
LA		32	48	55	77	90
M		6,8	8,6	10,5	10,4	14,2
MA		M8x1,25	M10x1,5	M12x1,75	M12x1,75	M16x2
	Useful depth	12	15	18	18	25
MB		11	14	18	17,5	20
MD		6,5	8,5	10,5	10,5	12,5
N H9		3	4	5	6	8
	Useful depth	3,5	4,5	5,5	6,5	8,5
NB		15	23	26,5	37,5	44
NC H9		/	/	/	6	8
	Useful depth	/	/	/	4,5	4,5
NE		/	/	/	59	69
P H9		/	/	/	6	8
	Useful depth	/	/	/	4,5	6,5
PA		/	/	/	49	54
Weight (g)		530	1230	2080	4100	7650

Permissible Loads

		Size				
		10	30	50	100	200
Radial Load (N)		80	200	320	400	550
Axial Load (N)	Fc	80	370	450	710	1000
	Ft	75	200	300	500	750
Torque Moment (Nm)		2,5	5,5	9,5	18	25

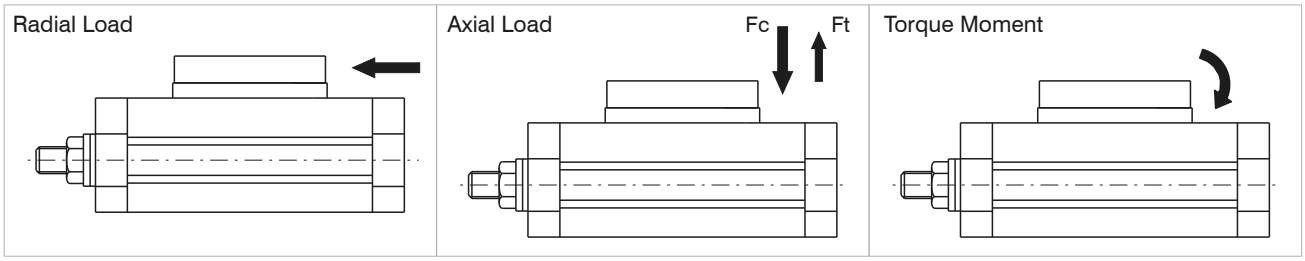

Torque Diagrams

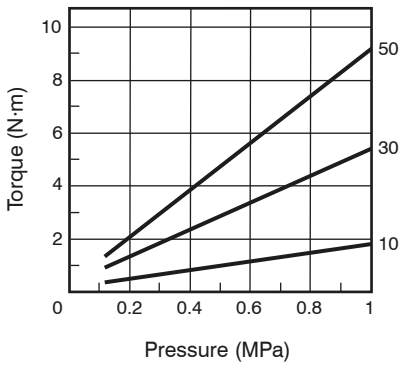

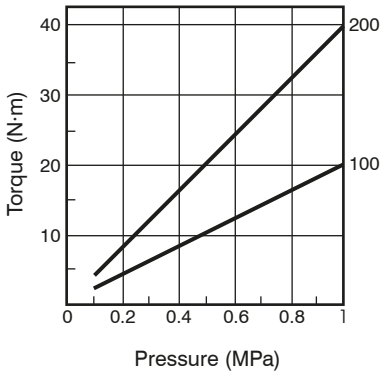

Rotation time (sec./90°)

Dimension	With adjusting screw	With hidraulic decelerator
10 - 30 - 50	0.2 - 1	0.2 - 0,7
100	0.2 - 2	0.2 - 1
200	0.2 - 2.5	0.2 - 1

Kinetic energy

Dimension	With adjusting screw	With hidraulic decelerator
10	0.006	Please apply to our tech-dpt for info (as general rule expressed valves can be multiplied by 3)
30	0.045	
50	0.08	
100	0.30	
200	0.52	

Overall dimensions and technical information are provided solely for informative purposes and may be modified without notice

Single rack rotary actuators

Ordering code

6411.Ø. _

- **50**
- **63**
- **80**
- **100**

- **90** = rotation 90°
- **180** = rotation 180°

Construction characteristics

Body	anodised aluminium
Piston	aluminium
End cap	anodised aluminium
Piston seal	NBR rubber
Pinion	steel
Rack	steel

Operational characteristics

Fluid	Filtered air. No lubrication needed, if applied it shall be continuous.
Max. pressure	10 bar
Working temperature	-5°C - +70°C
Rotation tolerance	0° - +4°

Overall dimensions Ø50 and Ø63

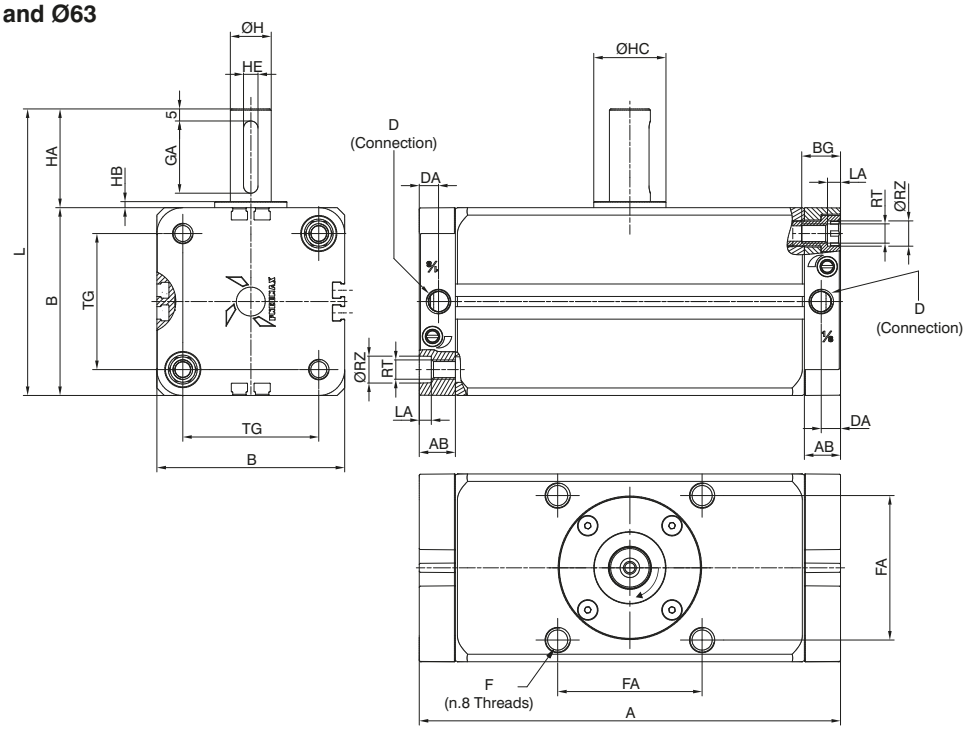

Overall dimensions Ø80 and Ø100

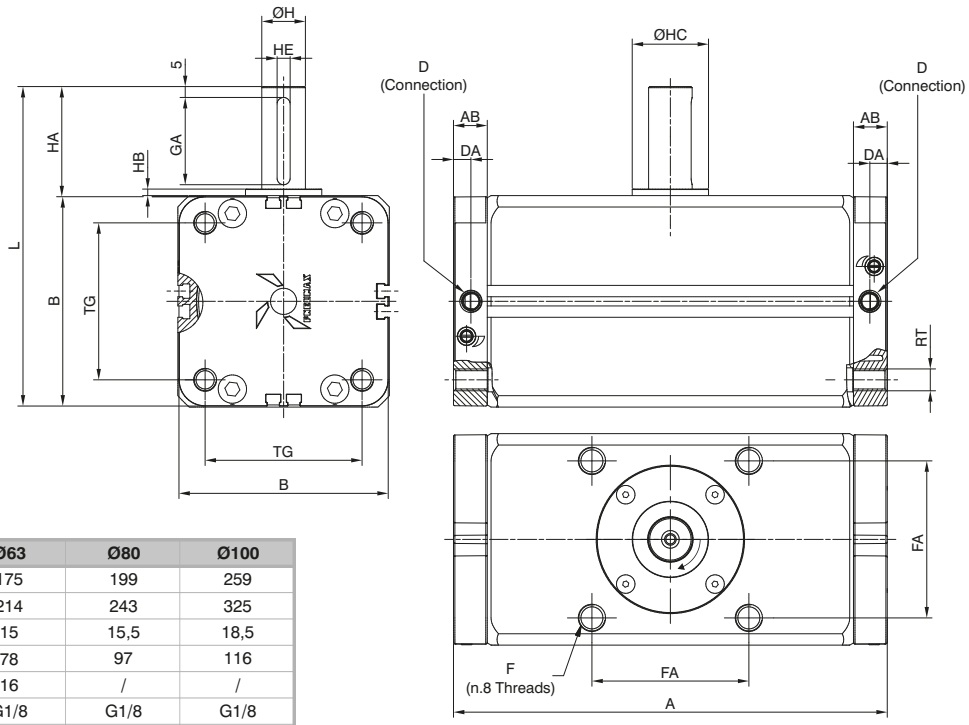

Bore		Ø50	Ø63	Ø80	Ø100
A	90°	156	175	199	259
	180°	189	214	243	325
AB		15	15	15,5	18,5
B		66	78	97	116
BG		16	16	/	/
D		G1/8	G1/8	G1/8	G1/8
DA		8	8	8	8
F		M8x1,25	M10x1,5	M12x1,75	M12x1,75
	Useful depth	12	15	15	18
FA		48	60	72	85
GA		25	30	40	45
H		15	17	20	25
HA		36	41	50	60
HB		2,5	2,5	3	4
HC		25	30	35	39,5
HE^{H9}		5	6	6	8
L		102	119	147	176
LA		5	5	/	/
RT		M8	M8	M10	M10
RZ		10,5	10,5	/	/
TG		46,5	56,5	72	89
Weight (gr.)	90°	1575	2451	4162	6989
	180°	1815	2823	4774	8329

Sensor slot
detail type "B"

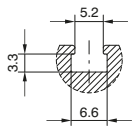

Usable sensors code
1590._
LRS._
LHS._

Overall dimensions and technical information are provided solely for informative purposes and may be modified without notice

Allowable Loads

	Bore			
	Ø50	Ø63	Ø80	Ø100
Radial load (N)	200	300	400	600
Axial Load in compression (N)	500	600	900	1000
Tensile Axial Load (N)	200			

Compression
Axial Load

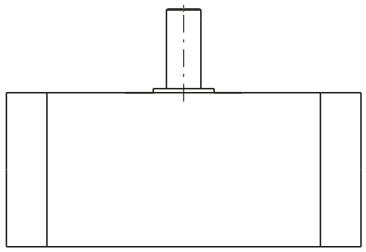

Tensile
Axial Load

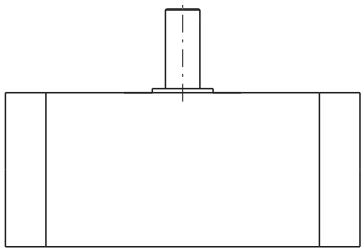

Radial Load

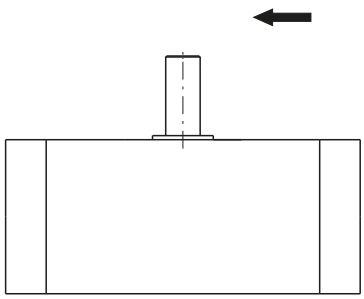

Torque Diagrams

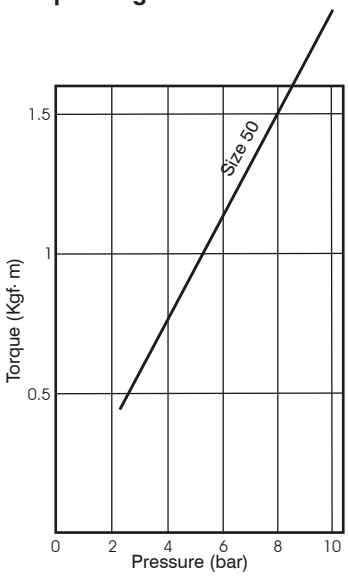

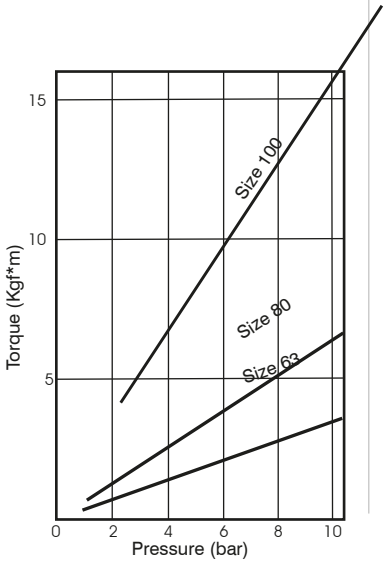

Max Kinetic energy (Kg·cm)
Kinetic energy (cushioning angle 35°)

Bore			
Ø50	Ø63	Ø80	Ø100
10	15	20	30

Rotation time according to inertial moments

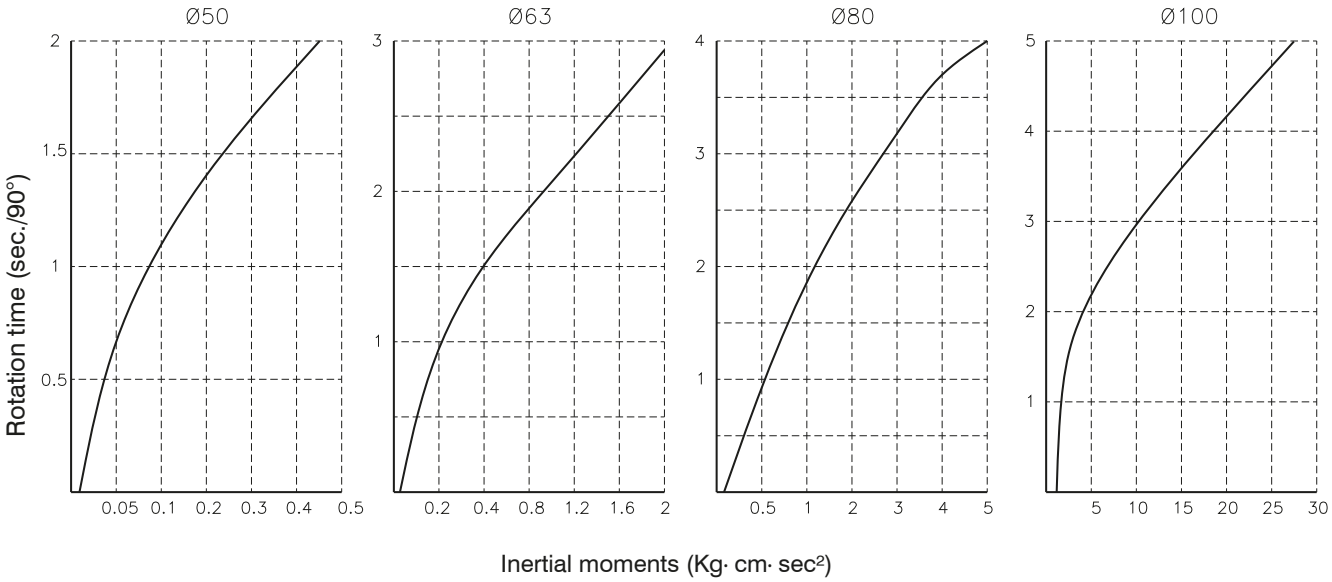

Foot (MS1)

Ordering code
1540.Ø.05/1F

The kit comprises:
n°1 foot (plated zinc steel)
n°2 screws (plated zinc steel)

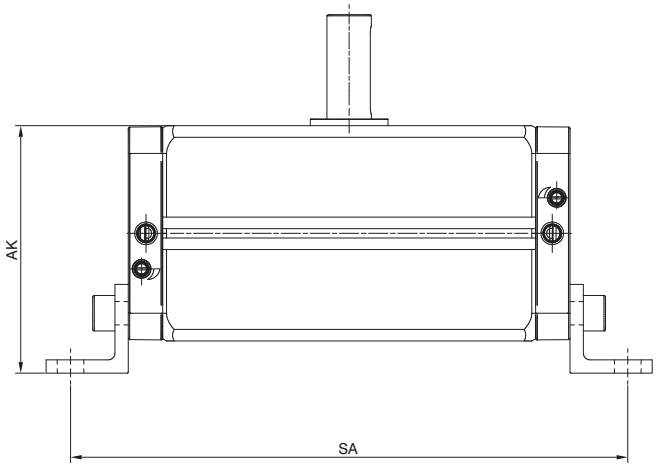

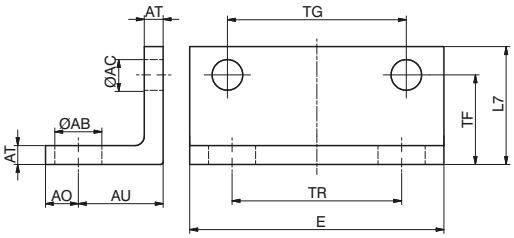

Bore		Ø50	Ø63	Ø80	Ø100
AK		78	89	111,5	132
SA	90°	198	217	251	313
	180°	231	256	295	379

Overall dimensions and technical information are provided solely for informative purposes and may be modified without notice

Vane type rotary actuators

General

The vane type rotary actuators, 6420 series is designed to operate at 90-180 or 270 deg. In a contained space. Dimensionally are more compact than other types of rotary actuators.

The range includes bore sizes from 10 to 100 in 4 configurations:
- basic.
- with rotary angle adjustment mechanism.
- with sensing support.
- with rotary angle adjustment mechanism and sensing support.

The bodies are in aluminium , the shafts in chrome plated steel and the seals in NBR.
The sensing support kit enables for the sensors to be positioned in any position.
The rotary angle adjustment mechanism enables the adjustment of the complete rotation on bore sizes 10 to 40 while on the others sizes carries as standard hydraulic dampers which enable the adjustment only of the last part of the rotation.
The units can be fixed using the thread on the body or the through holes on the body.
On bore sizes 50 to 100 the shaft runs into ball bearings which ensure high resistence.o rotante è guidato su cuscinetti a sfere che assorbono i carichi radiali e assiali, garantendo durata e affidabilità. assiali, garantendo durata e affidabilità.

Ordering code

6420.Ø._._

Size
Ø10
Ø15
Ø20
Ø30
Ø40
Ø50
Ø63
Ø80
Ø100

Rotation angle
90 = 90°
180 = 180°
270 = 270°

Version
/ = Without adjustable rotation angle, and without sensor support
R = With adjustable rotation angle
S = With sensor supports
T = With adjustable rotation angle and sensor supports

Construction characteristics

Body	anodised aluminium
Rod	steel
Seals	NBR
Vane	vulcanized NBR rubber on steel core
Cushoning	elastic bumper; hydraulic dampers from size Ø50 - Ø100 versions R or T

Operational characteristics

Fluid	Filtered air. No lubrication needed, if applied it shall be continuous.
Working pressure	1,5 - 7 bar
Temperature	0°C - 50°C
Rotation range	90° - 180° - 270°
Max. allowed leak	Ø10 - Ø40 = 0,3 Nl/min / Ø50 - Ø100 = 0,5 Nl/min

Overall dimensions Ø10 - Ø40

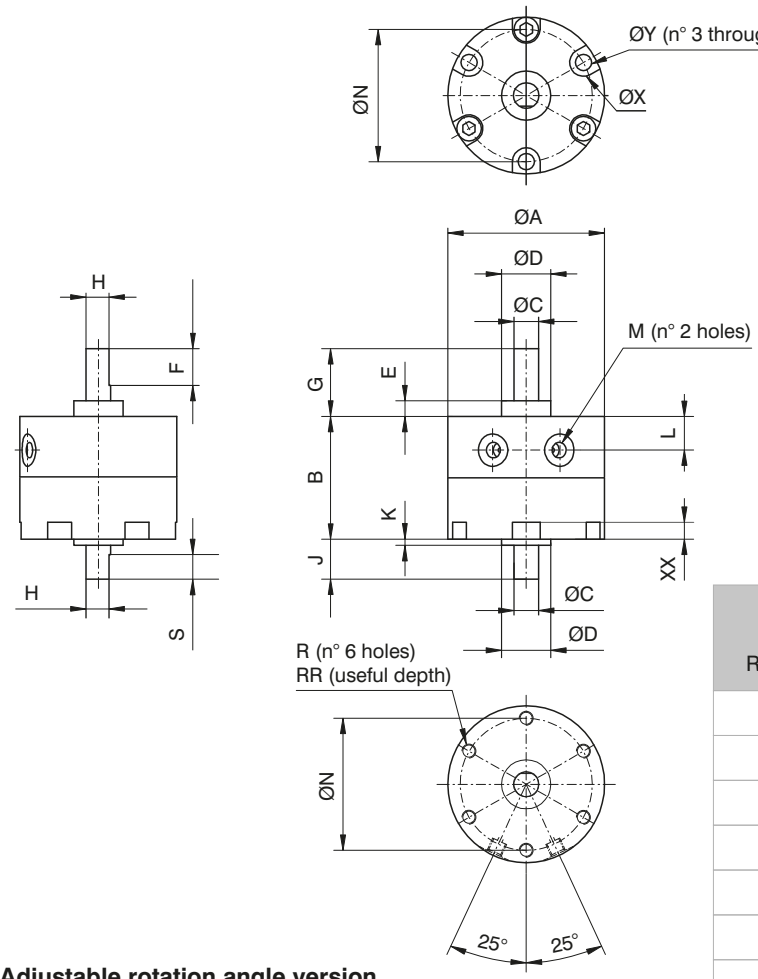

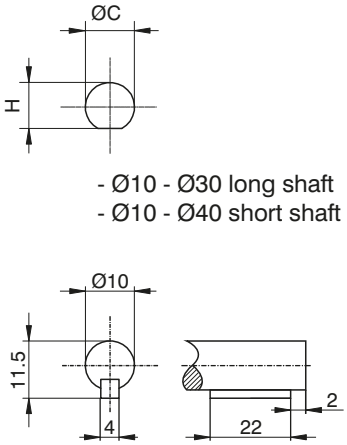

- Ø10 - Ø30 long shaft
- Ø10 - Ø40 short shaft

- Ø40 long shaft

Adjustable rotation angle version

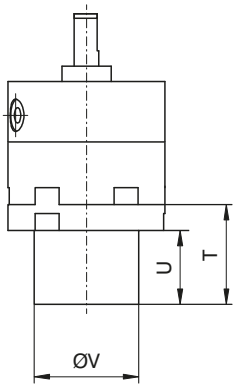

With sensor support version

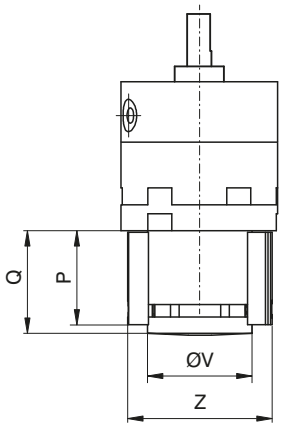

Bore - Rotation	10 - 90° / 10 - 180° / 10 - 270°	15 - 90° / 15 - 180° / 15 - 270°	20 - 90° / 20 - 180° / 20 - 270°	30 - 90° / 30 - 180° / 30 - 270°	40 - 90° / 40 - 180° / 40 - 270°
ØA	30	35	44	51	64
B	17	20,1	29,1	40	45
ØC	4	5	6	8	10
ØD	9	12	14	16	25
E	3	4	4,5	5	6,5
F	9	10	10	12	22
G	14	18	20,3	22	30
H	3,5	4,5	5,5	7,5	9
J	8	9	9,6	13	15
K	1	1,5	1,6	2	4,5
L	4,2	5	8,5	11	9,5
M	M5x0,8	M5x0,8	M5x0,8	M5x0,8	M5x0,8
ØN	24	29	36	43	56
P	23,3	28	28	30,8	33
Q	24	29,5	30,5	34	36
R	M3x0,5	M3x0,5	M4x0,7	M5x0,8	M5x0,8
RR	3	3	4,5	9	9
S	5	6	7	8	9
T	24	28	28,5	32,5	34,5
U	18	22	21	24	26
ØV	18	24	30	34	34
ØX	6	6	7,5	9	9
XX	3,5	3,5	4,5	5,5	5,5
ØY	2,3	2,3	3,2	4,2	4,2
Z	29	34	42	47	47
Weight (g) Base	28	48	112	200	342
Weight (g) With regulation rotation system	78	116	240	390	805

Overall dimensions and technical information are provided solely for informative purposes and may be modified without notice

Overall dimensions Ø50 - Ø100

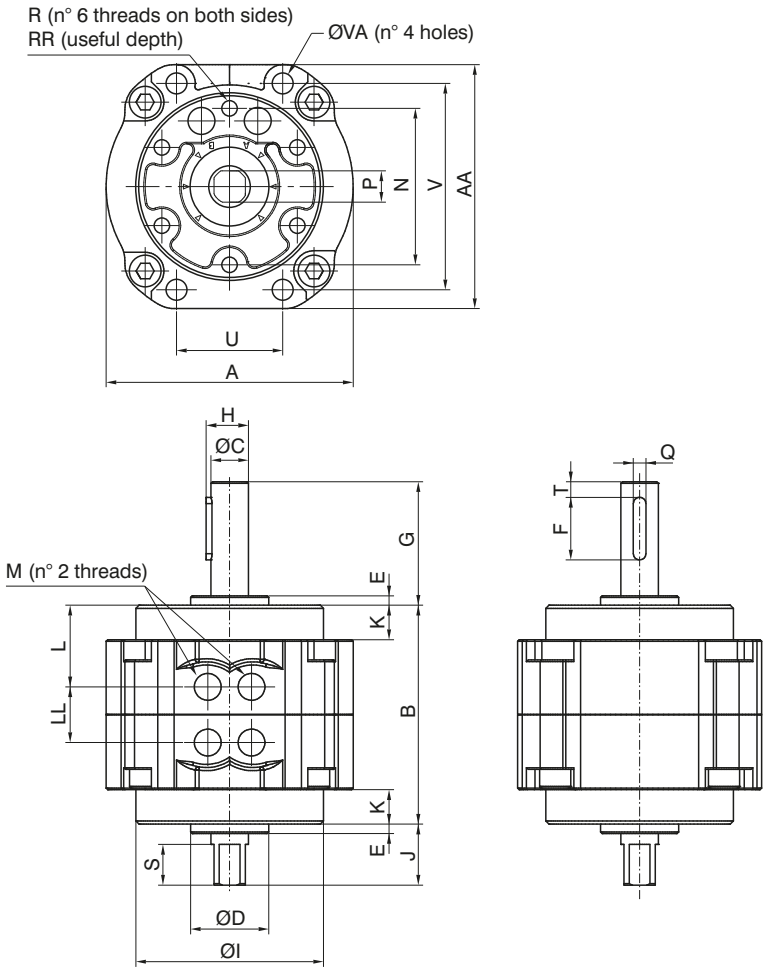

Adjustable rotation angle version

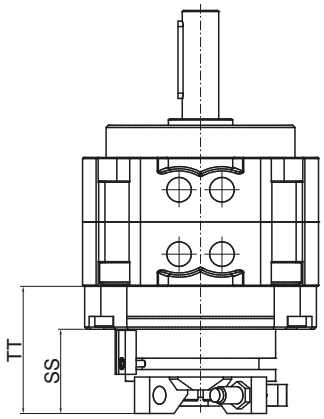

With sensor support version

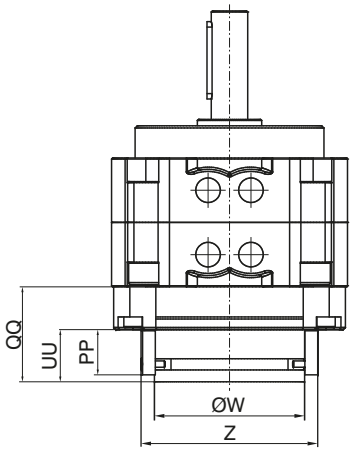

Bore - Rotation	50 - 90°	63 - 90°	80 - 90°	100 - 90°
	50 - 180°	63 - 180°	80 - 180°	100 - 180°
	50 - 270°	63 - 270°	80 - 270°	100 - 270°
A	79	98	110	140
AA	78	98	110	140
B	70	80	90	103
ØC	12	15	17	25
ØD	25	28	30	45
E	3	3	3	4
F	20	25	36	40
G	39,5	45	53,5	65
H	13,5	17	19	29
ØI	60	75	88	108
J	19,5	21	23,5	30
K	11	14	15	11,5
L	26	28,9	30	35,4
LL	18	22,2	30	32,2
M	G1/8"	G1/8"	G1/4"	G1/4"
N	50	60	70	80
P	10	12	13	19
PP	21	21	21	21
Q	4	5	5	7
QQ	39,4	43	44	48,5
R	M6x1	M8x1,25	M8x1,25	M10x1,5
RR	8	10	14	14
S	13	14	16	16
SS	38	38	39	39,5
T	5	7,5	5	5
TT	53	56,5	59	63
U	34	39	48	60
UU	24,5	24,5	24,5	24,5
V	66	83	94	120
ØVA	6,5	9	9	11
ØW	60	60	70	70
Z	73	73	83	83
Weight (g) Base	760	1290	1920	4100
Weight (g) With regulation rotation system	1100	1690	2370	4840

Key flat position and adjustable rotation angle Ø10 - Ø40

ROTATING SHAFT KEY FLAT POSITION

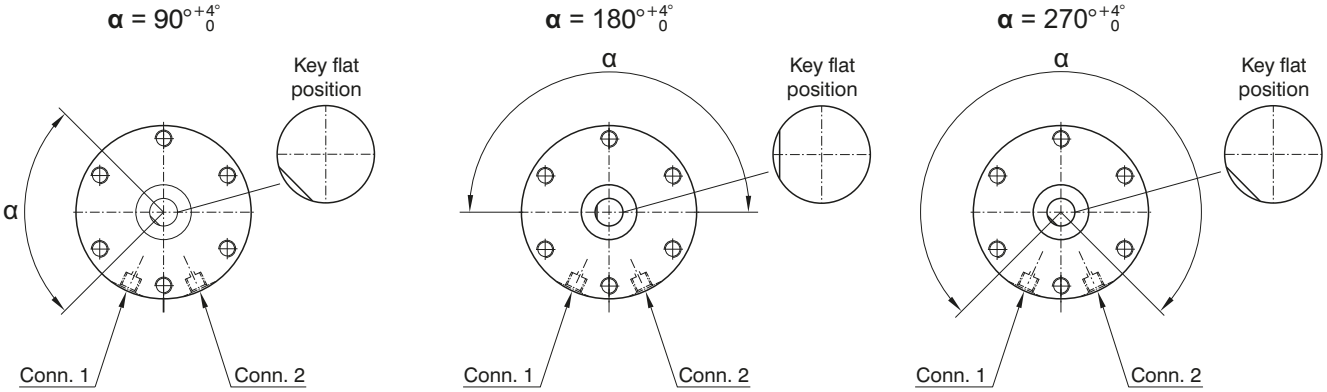

ROTATION ANGLE SETUP

To regulate the rotation angle (codes 6420..R or T), follow the instructions below

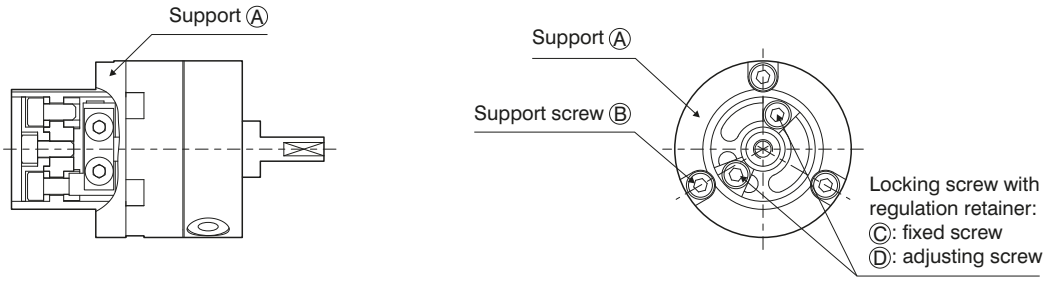

Phase 1 : Choose the regulation configuration based on the following options (consider the actuator base position):
rotation 90°, regulation 0 - 90°, rotation 180°, regulation 0 - 180°, rotation 270°, regulation 0 - 175°

ROTATION CONFIGURATION

90°

Standard version — from 0° to 90°

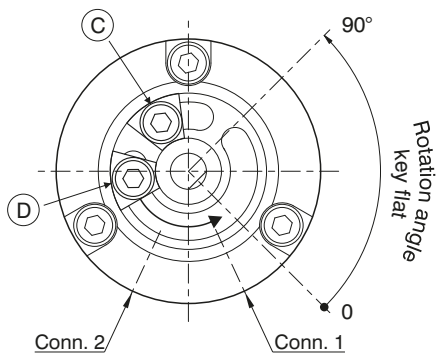

from 90° to 0°

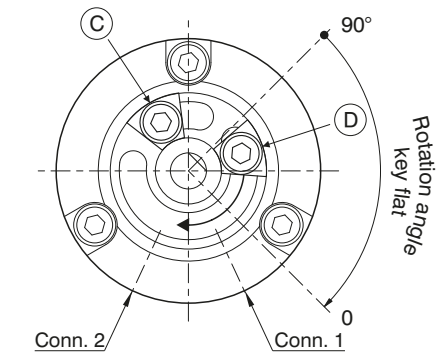

ROTATION CONFIGURATION

180°

Standard version — from 0° to 180°

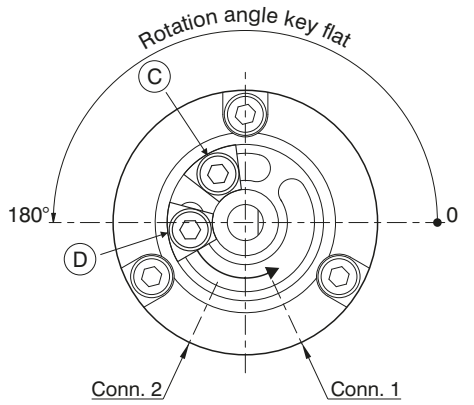

from 180° to 0°

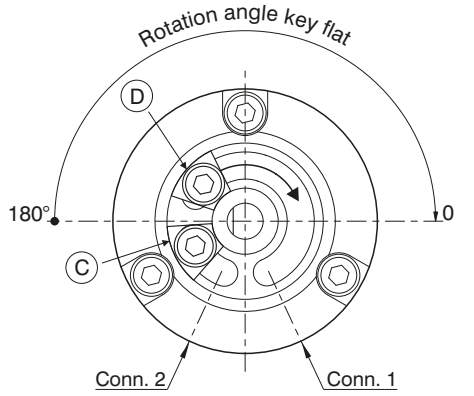

Overall dimensions and technical information are provided solely for informative purposes and may be modified without notice

Key flat position and adjustable rotation angle Ø10 - Ø40

ROTATION CONFIGURATION

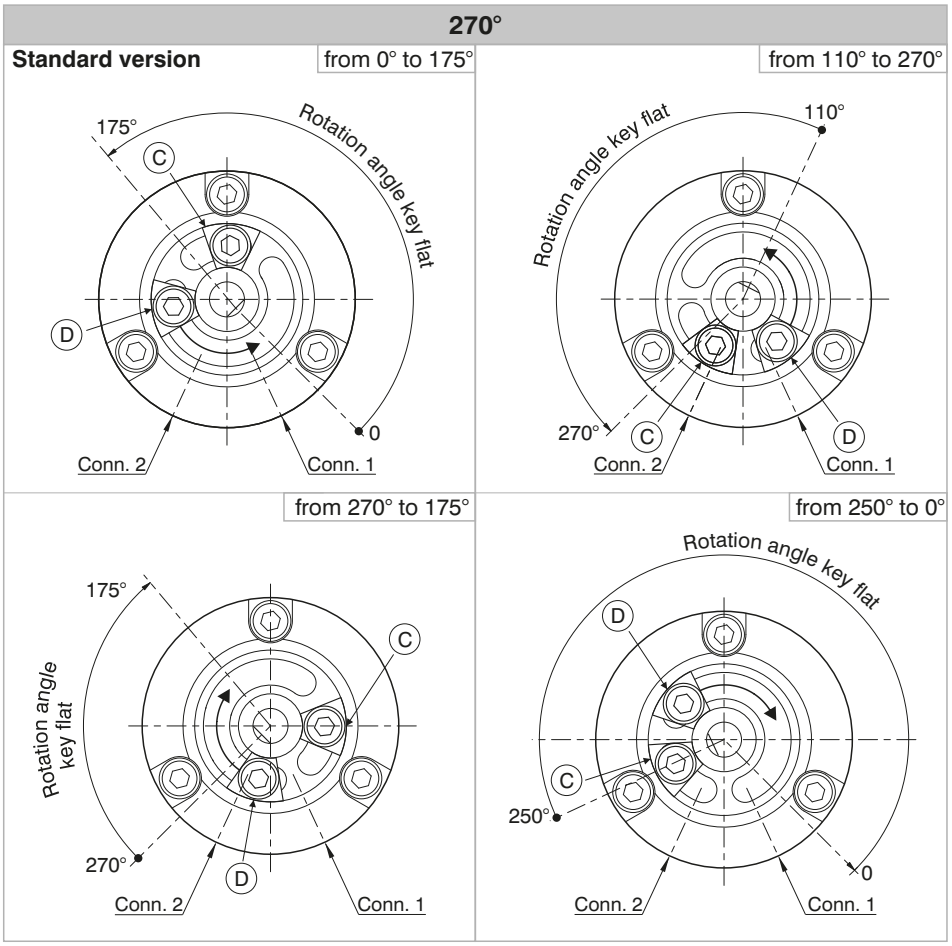

Ⓒ = **Fixed screw** Ⓓ = **Adjusting screw**

Phase 2 : If the desired settings do not correspond to the basic version settings:
- remove screw Ⓔ and disk Ⓕ or Ⓖ (depending on the version) (see figure 1)
- remove screws Ⓑ, the actuator support Ⓐ (see figure 1) and unlock blocking screws Ⓒ and Ⓓ (see rotation configuration)
- position screws Ⓒ and Ⓓ and the key flat of rotating shaft as indicated in the chosen rotation configuration in order to align the key flat of rotating shaft (see figure 2)
- re-assemble actuator support Ⓐ, tighten screws Ⓑ
- position screws Ⓒ and Ⓓ according to the desired adjustment and tighten the screws
- re-assemble disk Ⓕ or Ⓖ and screw Ⓔ

Figure 1

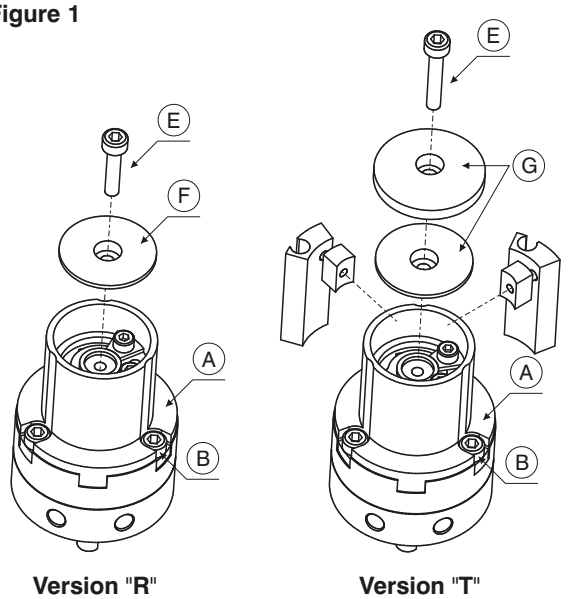

Figure 2

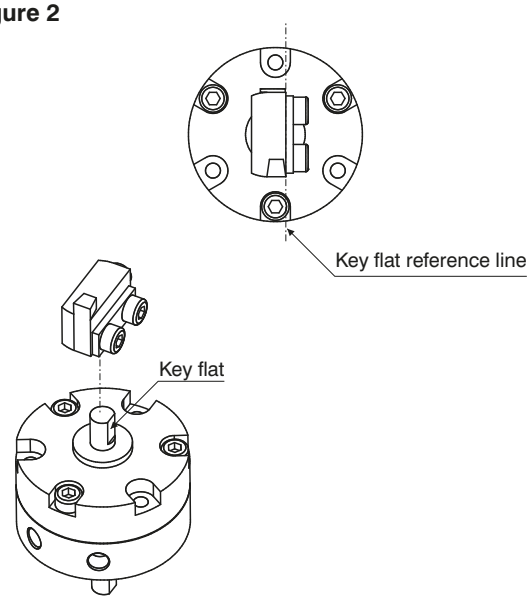

Spline position and adjustable rotation angle Ø50-Ø100

ROTATING SHAFT SPLINE POSITION

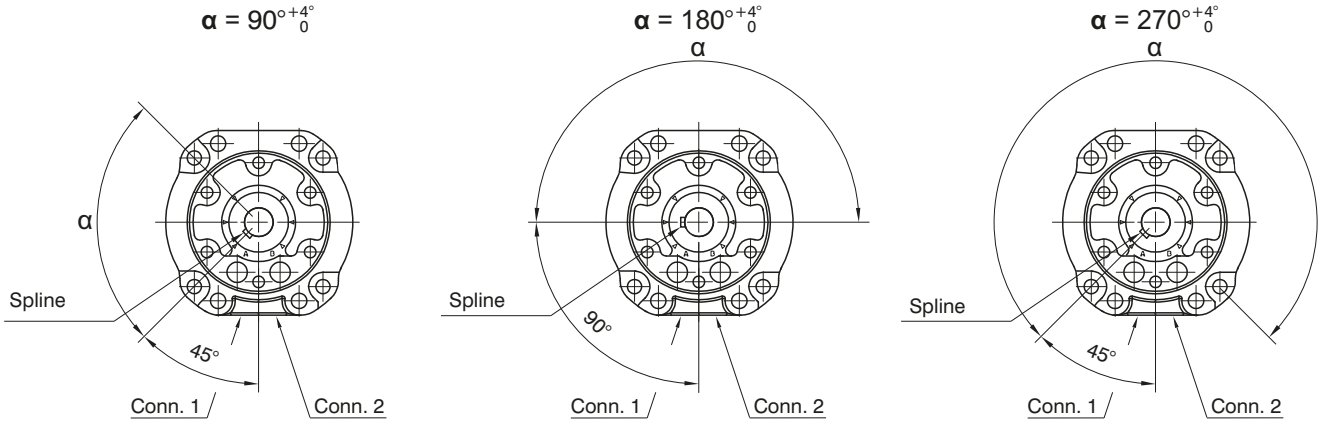

ROTATION ANGLE SETUP

The version with adjustable rotation angle (cod. 6420..R or T) is available with hydraulic dampers which enable to regulate the rotation angle by 15° and to decelerate moving mass.

Example: for 90° rotation and 15° regulation per decelerator, the effective rotation angle is 60°
Example: for 180° rotation and 15° regulation per decelerator, the effective rotation angle is 150°
Example: for 270° rotation and 15° regulation per decelerator, the effective rotation angle is 240°

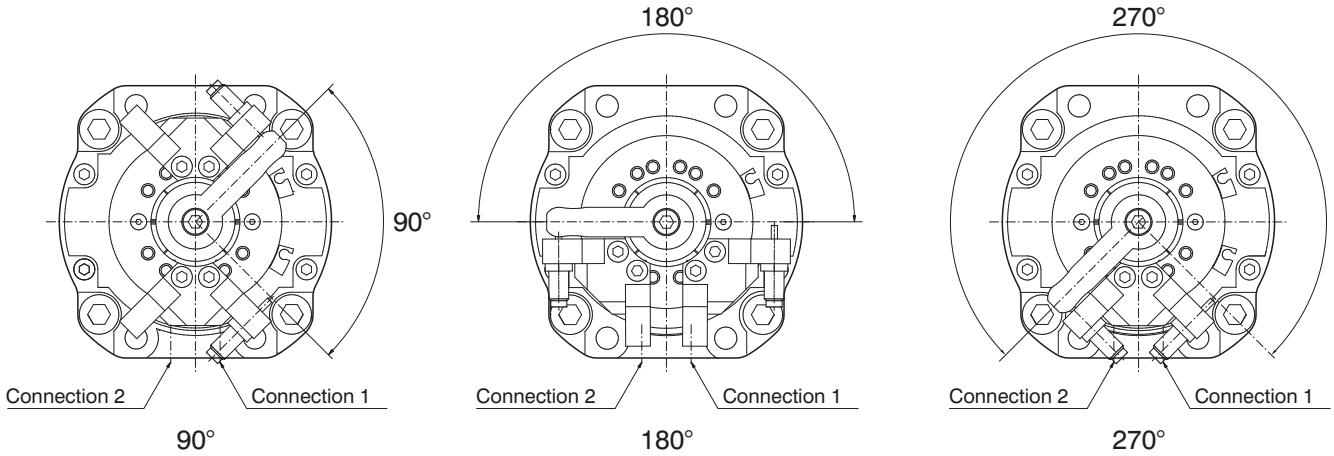

Overall dimensions and technical information are provided solely for informative purposes and may be modified without notice

Switch positioning instructions Ø10 - Ø40

Phase 1 - Unfasten screw Ⓐ
Phase 2 - Assemble the switch Ⓒ into the dedicated housing Ⓑ and lock with screw Ⓓ
Phase 3 - Rotate block Ⓑ in the desired position (see following image)

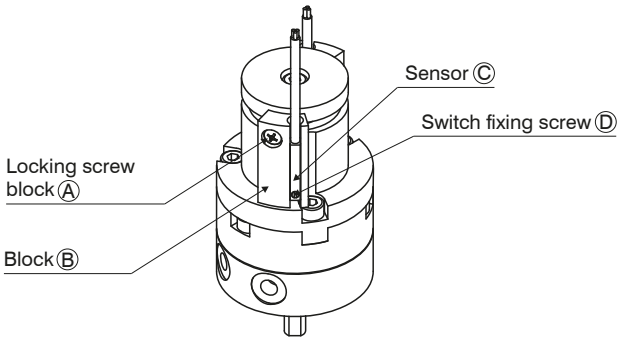

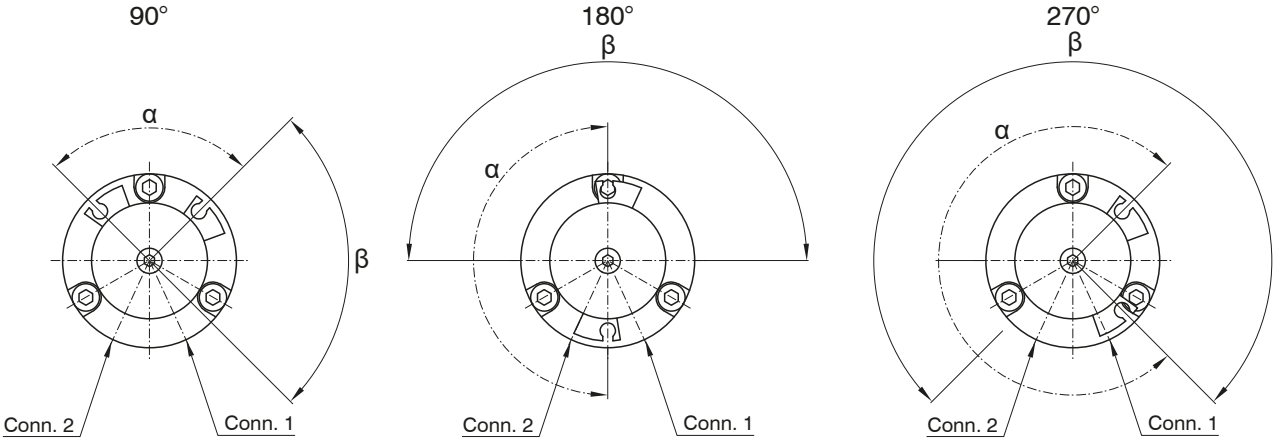

α - magnet rotating angle
β - shaft key flat rotating angle
For correct functionality position the switch within angle **α**

Phase 4 - tighten screw Ⓐ
Phase 5 - repeat the following phases for the second switch

AVAILABLE SENSORS

Code
1581.U
TRS.U
1581.HAP
THS.P

Code
1583.DC
1583.HAP
THR.P

Switch positioning instructions Ø50 - Ø100

Phase 1 - Unfasten screw (A)
Phase 2 - Assemble the switch (C) into the dedicated housing (B) and lock with screw (D)
Phase 3 - Rotate block (B) in the desired position (see following image)

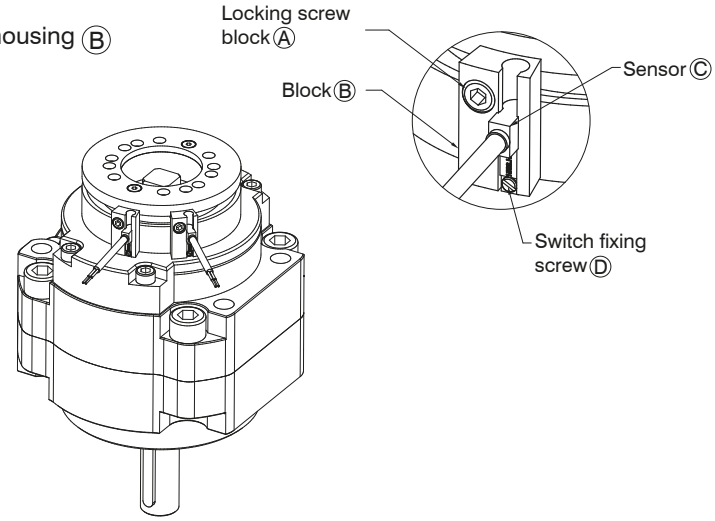

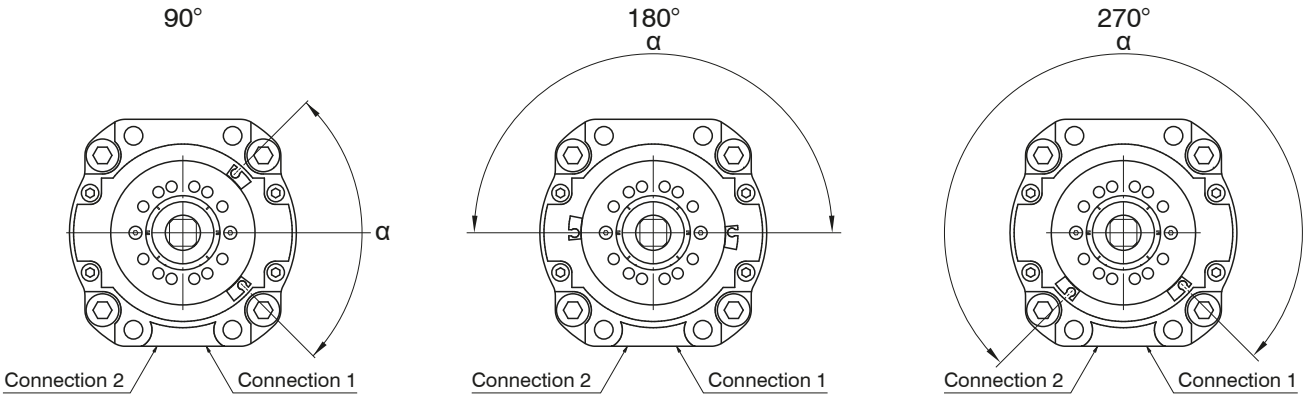

α - magnet rotating angle (that corresponds to the shaft key flat rotating angle)
For correct functionality position the switch within angle **α**

Phase 4 - tighten screw (A)
Phase 5 - repeat the following phases for the second switch

AVAILABLE SENSORS

	Code
	1583.DC
	1583.HAP
	THR.P

Overall dimensions and technical information are provided solely for informative purposes and may be modified without notice

Available torques

Ø10

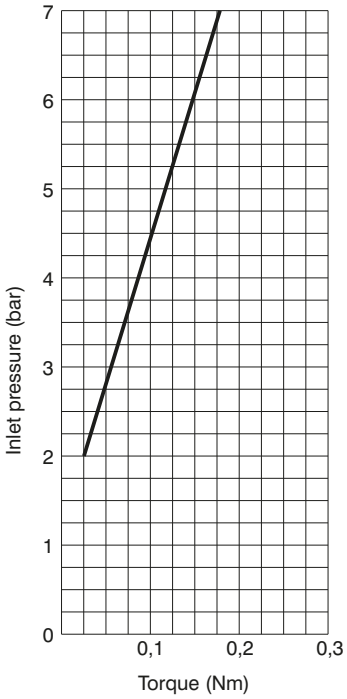

Ø15

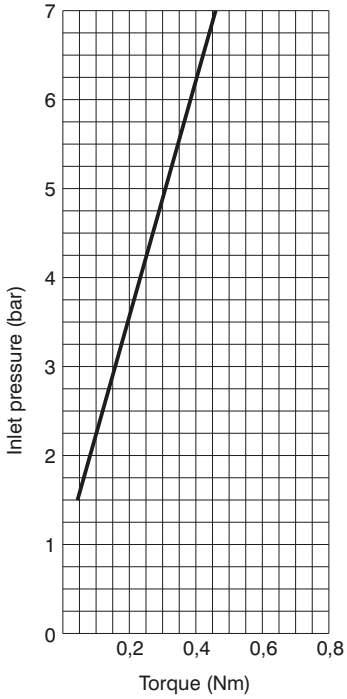

Ø20

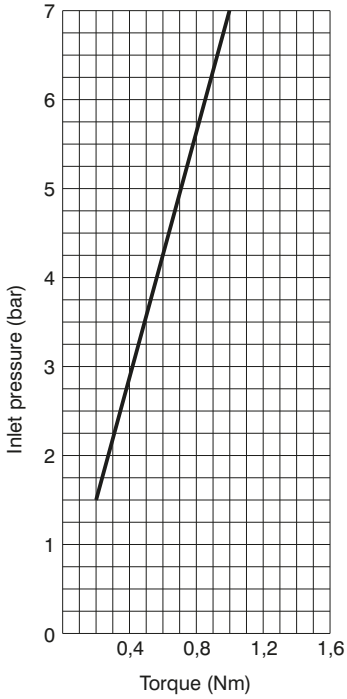

Ø30

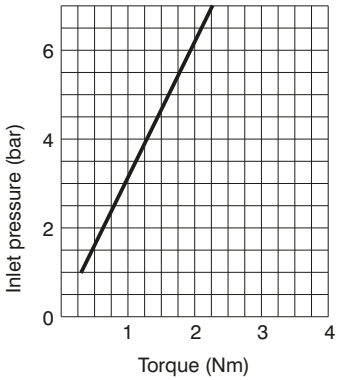

Ø40

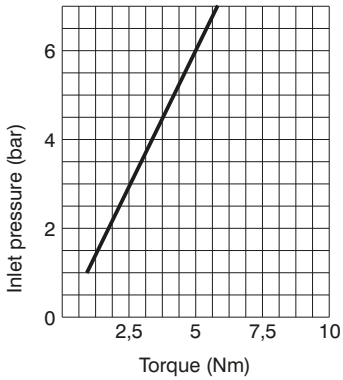

Ø50

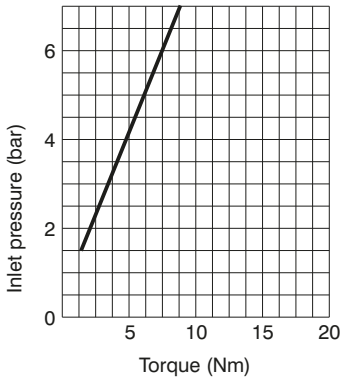

Ø63

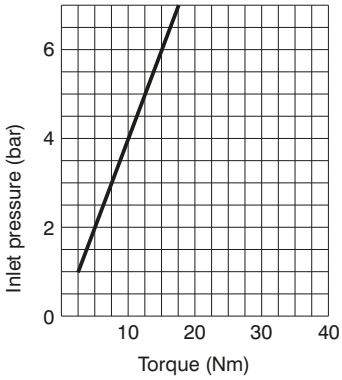

Ø80

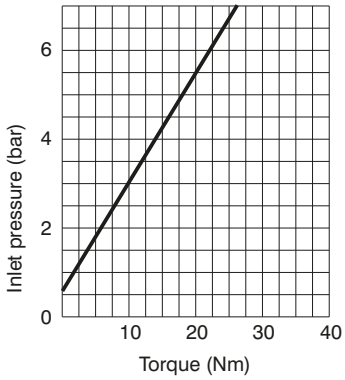

Ø100

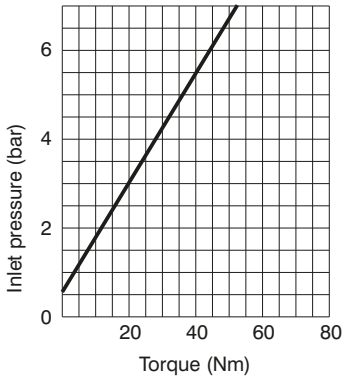

Direct mounting

Mounting types

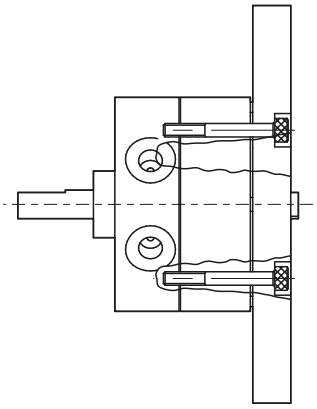

Rear mounting

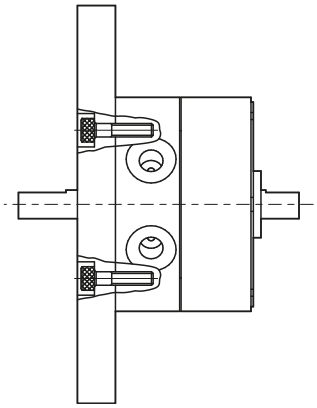

Frontal mounting

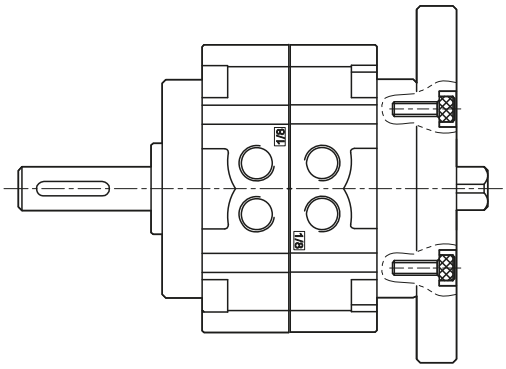

Rear mounting

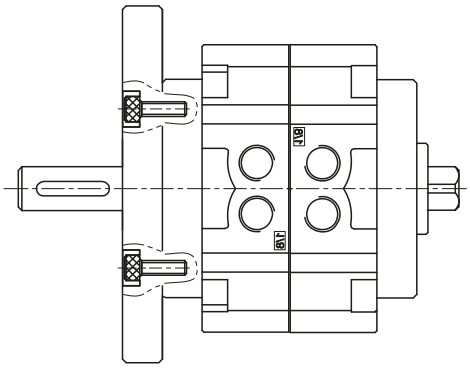

Frontal mounting

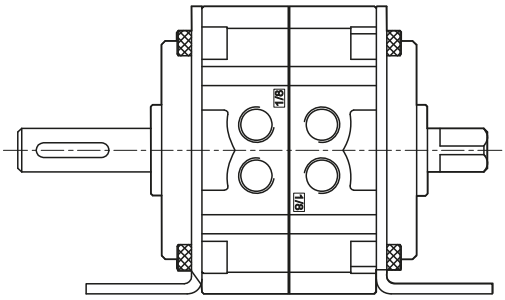

Mounting with flange

Overall dimensions and technical information are provided solely for informative purposes and may be modified without notice

Series 6300 - Pneumatic grippers

General

Pneumatic grippers from the 6300 series are typically used in complex systems such as assembly machines, robots, manipulators etc.
This series covers the wide range requirements of this sector, allowing a variety of applications.
The range includes grippers equipped with holding fingers operating from -10° to +30° degrees, with 180° degree opening, or a parallel guided gripper with great rigidity throughout the stroke.
The parallel grippers cater for larger openings (three different strokes for each diameter) with synchronised operation via a pinion-rack system with high strength thanks to a double piston mechanism.
For the typical application of supplying a piece upon to a machine tool, make provision for an automatic three-pronged movement carried along by a wedge mechanism, containing the elevated force dimensions.
The holding fingers can have a tolerance reference as a precise fixing device for the catching mechanism. Every type of “hand” offers different functional levels of performance at varying diameters and lengths, secondary to the application by the “fingers”.

Pneumatic grippers, angular - Standard version

Ordering code

6301.Ø. _

- **10**
- **16**
- **20**
- **25**

- **D** = Double acting
- **S** = Single acting (normally open)

Construction characteristics

Body	anodised aluminium
Piston	AISI 303 stainless steel
Fingers	nitrate steel
End cap	anodised aluminium
Seals	oil resistant NBR rubber

Operational characteristics

Fluid	Filtered air. No lubrication needed, if applied it shall be continuous.		
Working pressure	1 - 6 bar (double acting) - 2.5 - 6 bar (single acting)		
Operating temperature	-5°C - +70°C		
Opening total stroke	-10° - 30°		
Holding force (Nm) at 5 bar	Bore	Double acting	Single acting
	Ø10	0.1	0.07
	Ø16	0.4	0.30
	Ø20	0.7	0.55
	Ø25	1.35	1.08
Maximum operating frequency	from Ø10 to Ø25, 190 cycles/minute		

Overall dimensions and technical information are provided solely for informative purposes and may be modified without notice

Overall dimensions

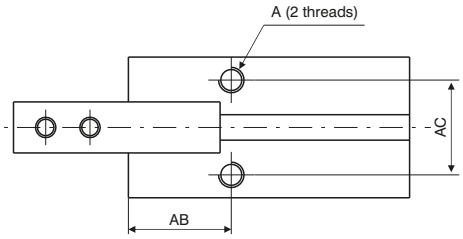

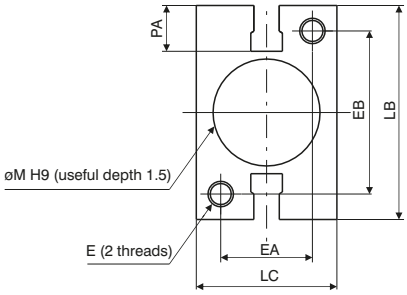

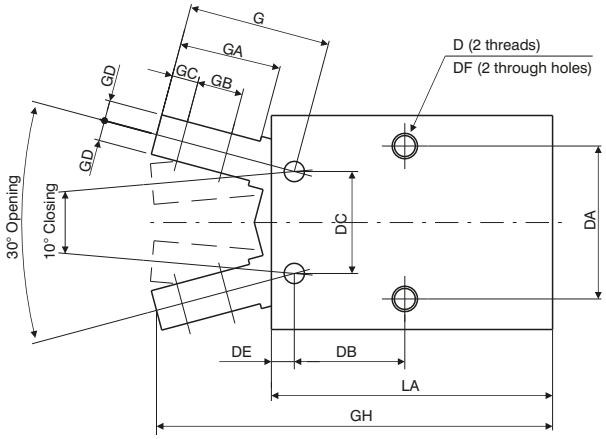

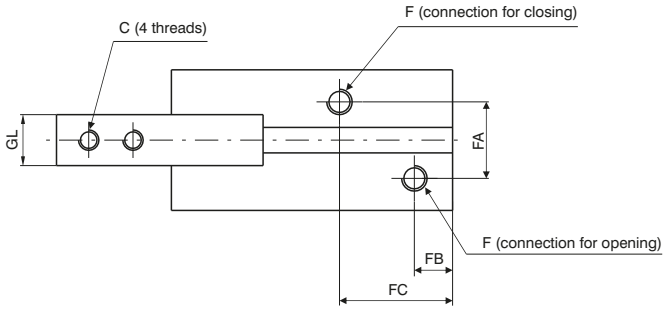

Bore		Ø10	Ø16	Ø20	Ø25
A		M3x0,5	M4x0,7	M5x0,8	M6
	Useful depht	6	6,5	8	10
AB		11,6	14,6	20,2	23,9
AC		11,4	16	18,6	22
C		M2,5x0,45	M3x0,5	M4x0,7	M5x0,8
D		M3x0,5	M4x0,7	M5x0,8	M6
	Useful depht	5	8	10	12
DA		16	24	30	36
DB		12,8	16,2	21,7	25,8
DC		10	16	20	25
DE		2,8	3,9	4,5	4,6
DF		2,6	3,4	4,3	5,1
E		M3x0,5	M4x0,7	M5x0,8	M6
	Useful depht	6	8	10	12
EA		12	15	18	22
EB		18	22	32	40
F		M3x0,5	M5x0,8	M5x0,8	M5x0,8
FA		11	13	15	20
FB		7,2	7	7,5	7,7
FC		18,8	18,3	22,2	23,5
G		17,2	22,6	28	37,5
GA		12	16	20	27
GB		5,7	7	9	12
GC		3	4	5,2	8
GD		2	3,5	4	5
GH		52,4	62,5	78,7	92
GL $^{0/-0,1}$		6,4	8	10	12
LA		38,6	44,6	55,2	60,4
LB		23	30,6	42	52
LC		16,4	23,6	27,6	33,6
M ^{H9}		11	17	21	26
PA		5,4	5,8	9	11,5
Weight (g)		40	90	180	315

Sensor slot
detail type “B”

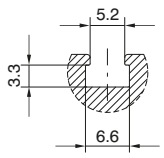

Gripping force 5 bar (Nm)

Bore	Ø10	Ø16	Ø20	Ø25
Double acting (Nm)	0,1	0,4	0,7	1,35
Single acting (Nm)	0,07	0,3	0,55	1,08

NOTE:
Bore selection should be made considering a holding force 10 to 20 times the component weight.
In case of acceleration/deceleration a further margin of safety should be considered.

	Double acting	Single acting
Ø10	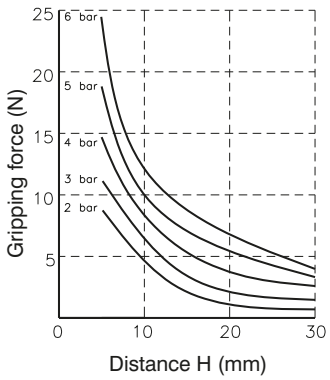	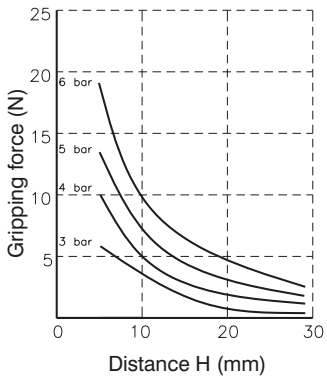
Ø16	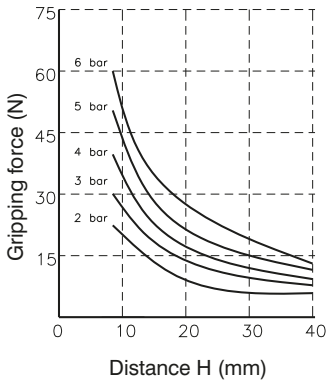	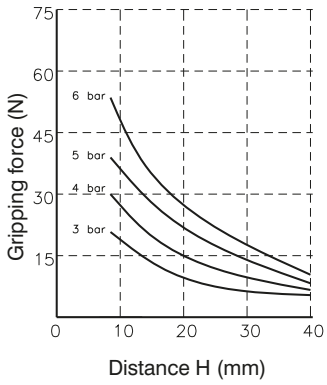
Ø20	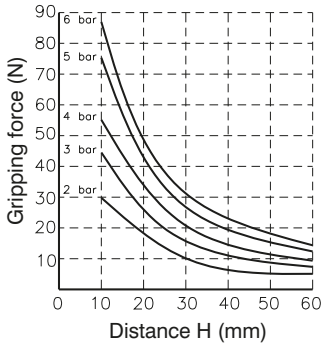	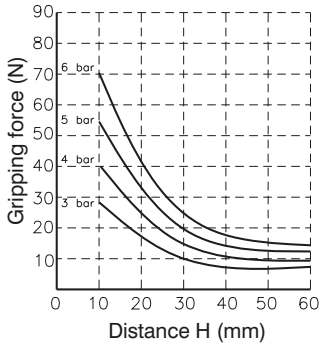
Ø25	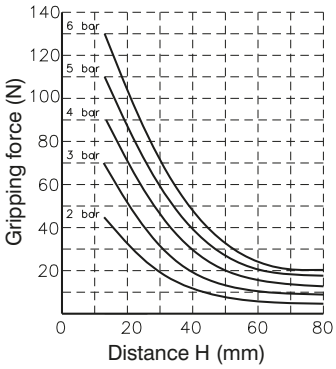	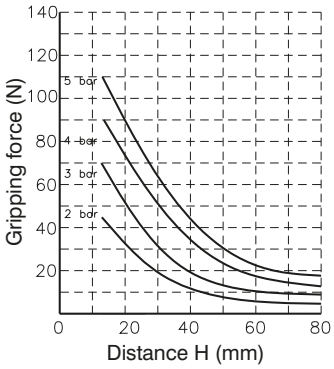

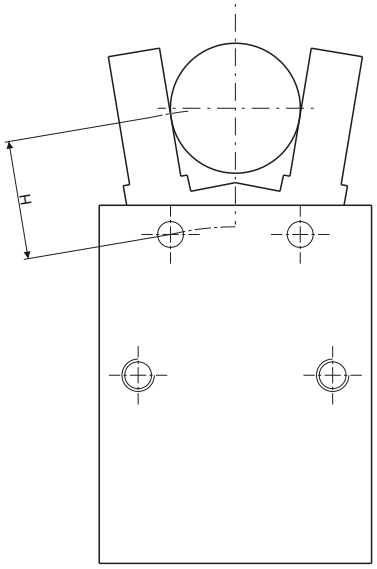

Overall dimensions and technical information are provided solely for informative purposes and may be modified without notice

Pneumatic grippers, 180 °angular

Ordering code

6302.Ø.D

- **10**
- **16**
- **20**
- **25**

Construction characteristics

Body	anodised aluminium
Piston	aluminium
Fingers	steel
End cap	anodised aluminium

Operational characteristics

Function	double acting
Fluid	Filtered air. No lubrication needed, if applied it shall be continuous.
Working pressure	1 - 6 bar
Working temperature	-5C° - +70C°
Opening total stroke	-3° - 180°
Maximum operating frequency	from Ø10 to Ø25, 60 cycles/minute

Overall dimensions

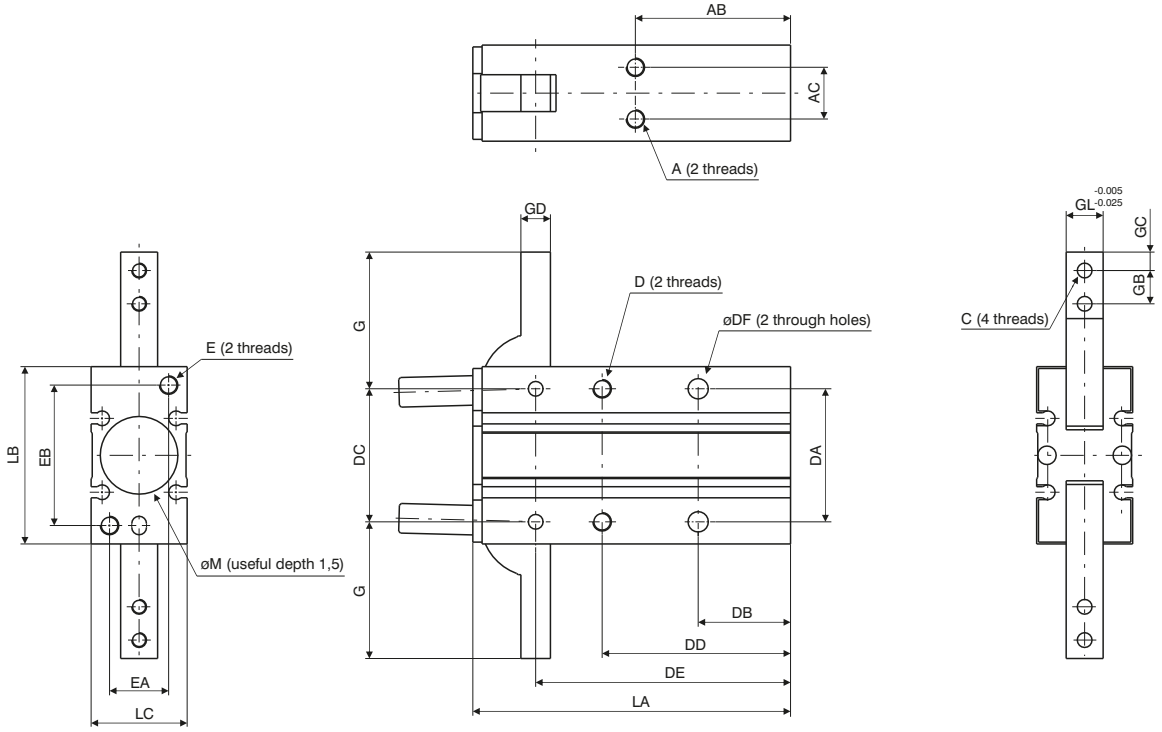

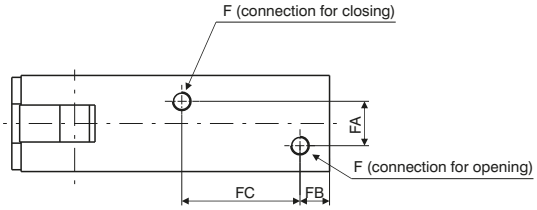

Bore		Ø10	Ø16	Ø20	Ø25
A		M3x0,5	M4x0,7	M5x0,8	M6x1
	Useful depth	4	5	8	10
AB		30	33	42	50
AC		9	12	14	16
C		M3x0,5	M3x0,5	M4x0,7	M5x0,8
D		M3x0,5	M4x0,7	M5x0,8	M6x1
	Useful depth	6	8	10	12
DA		24	30	36	42
DB		18	20	25	30
DC		22	28	36	45
DD		35	41	51	60
DE		47,5	55,5	69	86
DF		3,4	4,5	5,5	6,6
E		M3x0,5	M4x0,7	M5x0,8	M6x1
	Useful depth	6	8	10	12
EA		9	12	16	18
EB		24	30	38	46
F		M5x0,8	M5x0,8	M5x0,8	M5x0,8
FA		3	8	2	14
FB		7	7	8	8
FC		23	25	32	42
G		23,5	28,5	37	45
GB		6	7	9	12
GC		3	4	5	6
GD		4	5	8	10
GL		6	8	10	12
LA		58	69	86	107
LB		30	38	48	58
LC		15	20	26	30
N		4	4	5	5
	Useful depth	3	3	4	4
NA		9	15	19	23
ØM^{H9}		11	17	21	26
ØNB^{H9}		3	3	4	4
P		2	2,5	3	3
PA		13	18	20	24
Weight (g)		70	150	320	550

Sensor slot detail type "C"

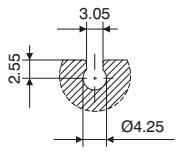

Back view detail

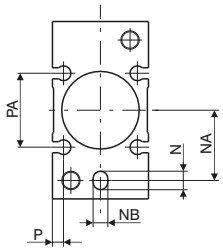

Overall dimensions and technical information are provided solely for informative purposes and may be modified without notice

Operating criteria

Gripping force 5 bar (Nm)

Bore	Ø10	Ø16	Ø20	Ø25
(Nm)	0,16	0,54	1,1	2,28

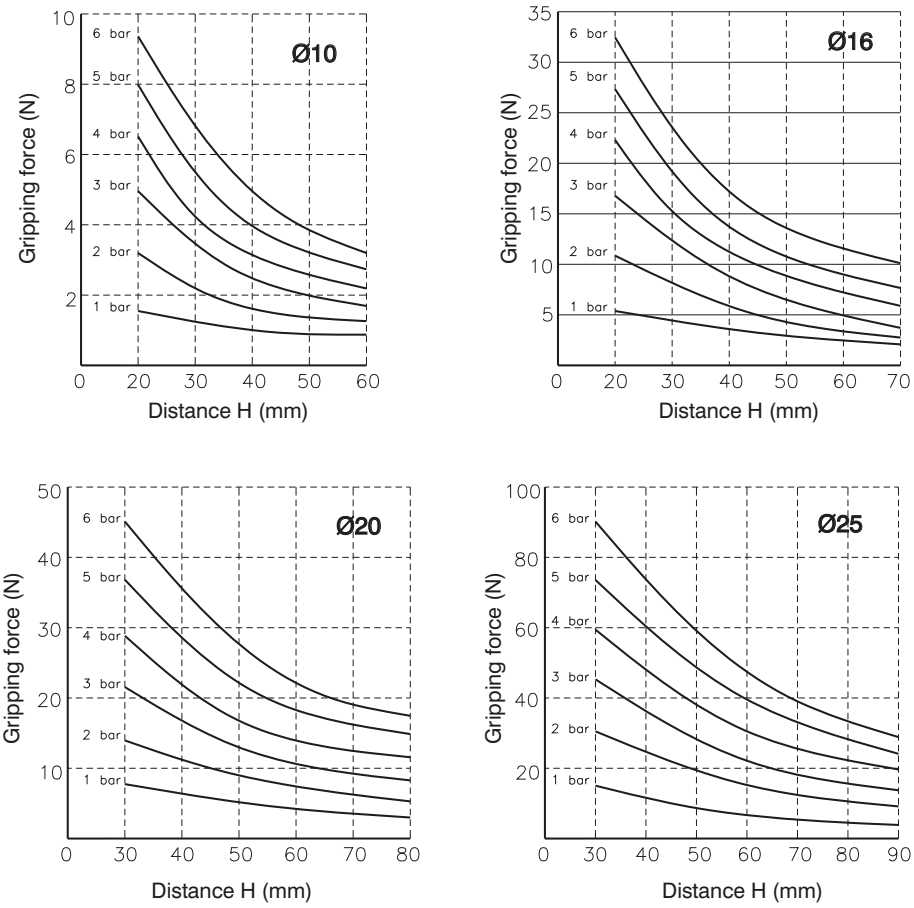

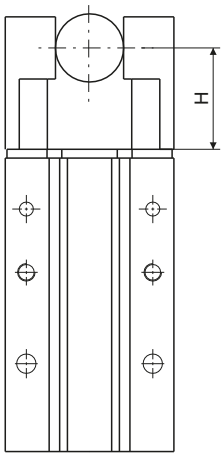

Confirmation of Holding point

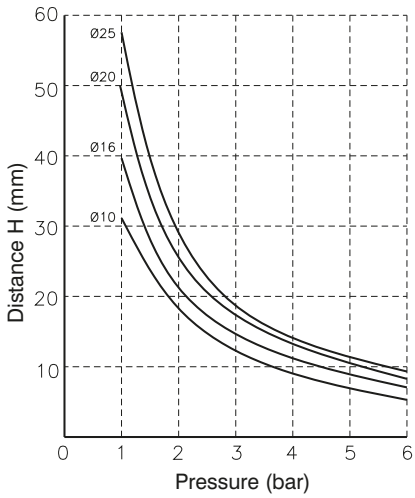

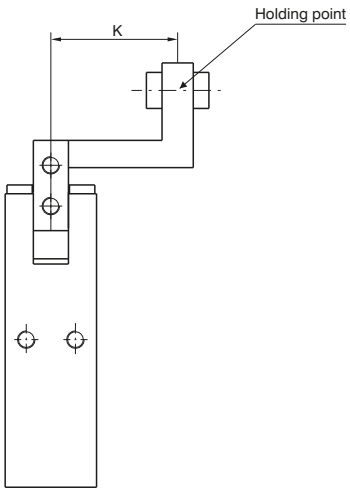

Applications where the holding point is outside the recommended parameters shown on the above graph might affect the product life.

180° angular gripper rack & pinion style

Ordering code

6303.Ø.D_

- **F** = Fingers, end fixing
- **L** = Fingers, side fixing

- **20**
- **25**
- **32**
- **40**
- **50**

Construction characteristics

Body	anodised aluminium
Piston	aluminium
Fingers	steel
End cap	anodised aluminium

Operational characteristics

Function	double acting
Fluid	Filtered air. No lubrication needed, if applied it shall be continuous.
Working pressure	1.5 - 7 bar
Working temperature	-5C° - +70C°
Opening total stroke	-5° - 180°
Maximum operating frequency	from Ø20 to Ø25, 60 cycles/minute from Ø32 to Ø50, 30 cycles/minute

Overall dimensions and technical information are provided solely for informative purposes and may be modified without notice

Overall dimensions

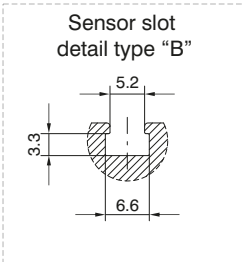

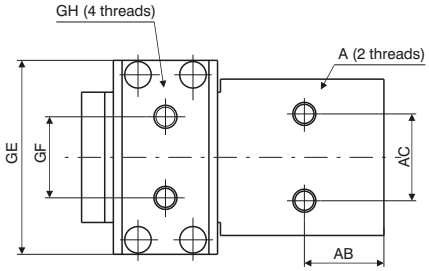

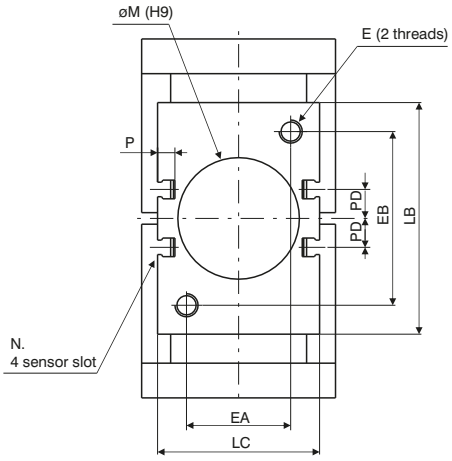

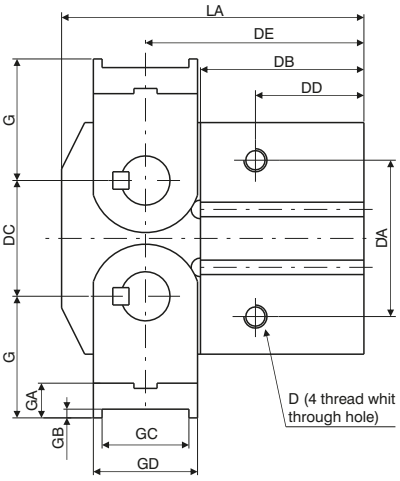

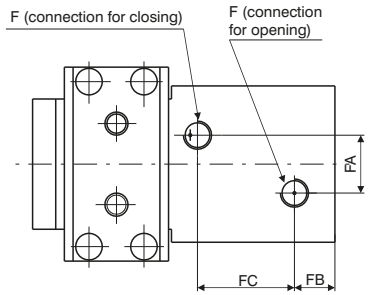

Bore		Ø20	Ø25	Ø32	Ø40	Ø50
A		M5	M6	M6	M8	M10
	Useful depth	7	10	10	15	20
AB		17	20	21	27,5	36
AC		20	24	24	30	40
D		M5	M6	M6	M8	M10
	Useful depth	10	12	12	16	20
DA		27	34	42	54	70
DB		35	40	47	56,5	69
DC		18	24	30	40	56
DD		23	27	29	37,5	48
DE		45	51	61,5	75,5	96
E		M5	M6	M6	M8	M10
	Useful depth	10	12	12	15	20
EA		26	30	30	36	40
EB		26	30	45	60	80
F		M5	M5	G1/8	G1/8	G1/4
FA		12	16	20	20	30
FB		9	10	13	14	16
FC		20	23	25	33,5	44
G		23	27	32	42	58
GA		7	8	9	12	17
GB		2	2	2	3	4
GC		12	17	23	30	44
GD		16	21	27	36	52
GE		41	45	51	67	85
GF		18	20	20	28	38
GH		M4	M5	M6	M8	M10
H		5	6	7	9	13
HA		10	12	14	21	24
HB		5	6	7	10	13
HC		28	30	34	44	58
HD		14	16	18	24	30
LA		60	69	83,5	104,5	136
LB		36	45	58	80	112
LC		36	40	45	56	66
ØM^{H9}		21	26	34	42	52
	Useful depth	3	3	4	4	5
P		6	5,5	5,5	6	6
PD		4	4,5	11	10	13
Weight (g)		300	500	900	2100	5000

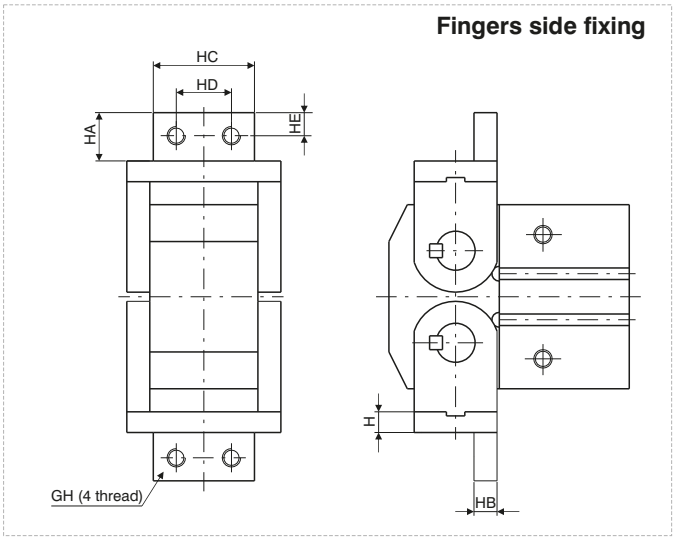

Operating criteria

Gripping force

NOTE:
Bore selection should be made considering a holding force 10 to 20 times the component weight.
In case of acceleration/deceleration a further margin of safety should be considered.

Bore	Ø20	Ø25	Ø32	Ø40	Ø50
(Nm)	0,3	0,7	1,6	3,7	8,3

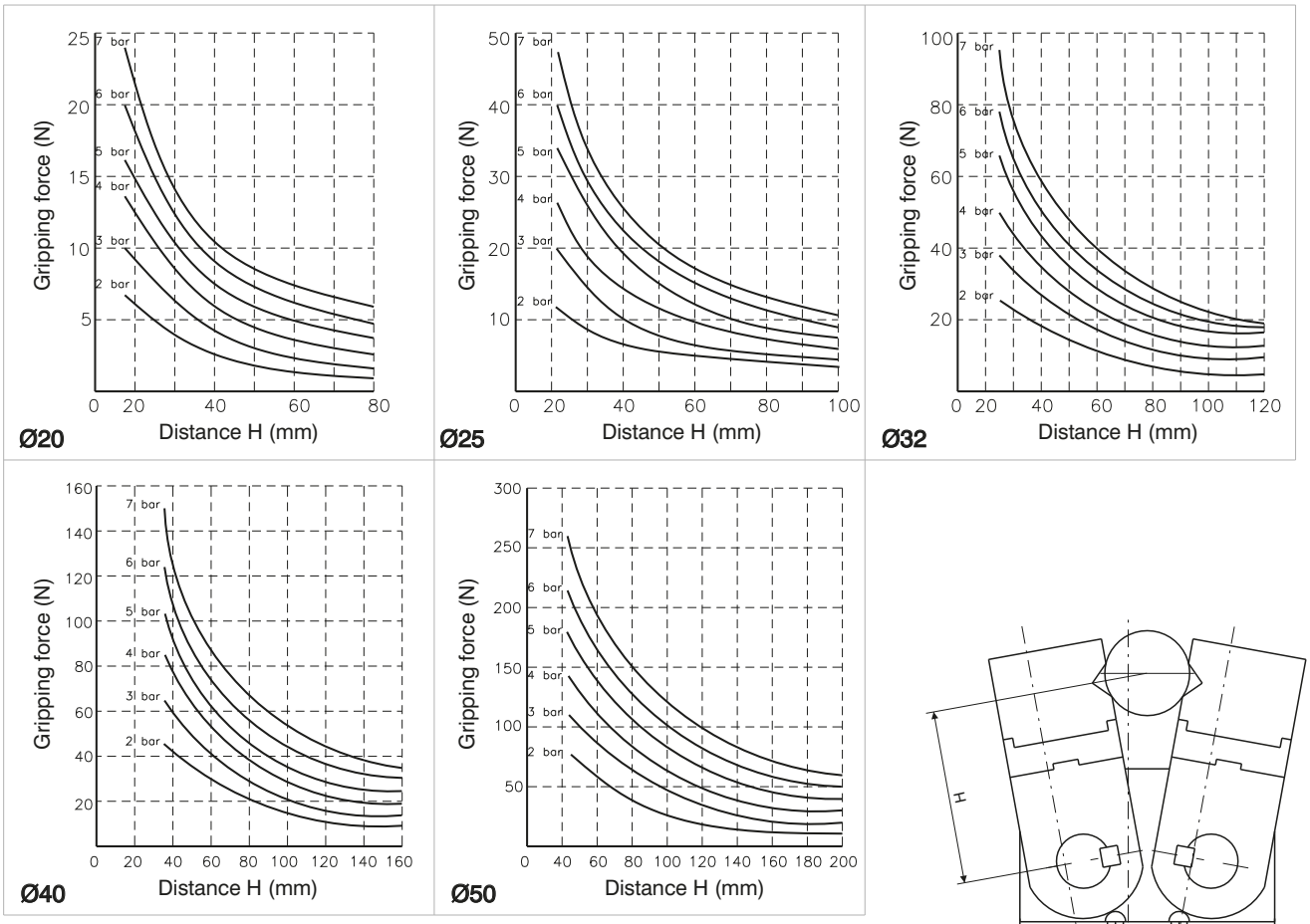

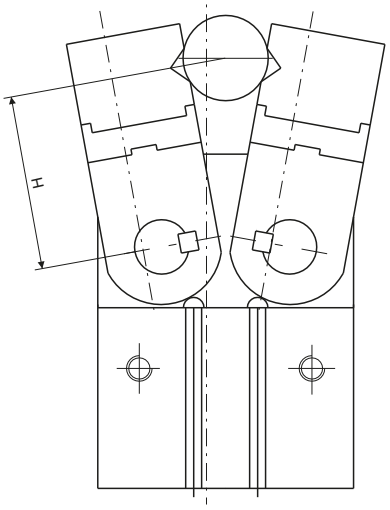

Overall dimensions and technical information are provided solely for informative purposes and may be modified without notice

Parallel style pneumatic grippers - Standard version

Ordering code

6310.Ø __

- **10**
- **16**
- **20**
- **25**

- **D** = Double acting
- **NC** = Single acting (normally closed)
- **NO** = Single acting (normally open)

Construction characteristics

Body	anodised aluminium
Piston	aluminium or stainless steel (depending on the bore)
Fingers	steel
End cap	anodised aluminium
Seals	oil resistant NBR rubber

Operational characteristics

Fluid	Filtered air. No lubrication needed, if applied it shall be continuous.
Working pressure	double acting : 2 - 7 bar (for ø10) - 1 - 7 (for other bores) single acting : 3.5 - 7 bar (for ø10) - 2.5 - 7 (for other bores)
Operating temperature	-5°C - +70°C
Maximum operating frequency	from Ø10 to Ø25, 180 cycles/minute

Overall dimensions

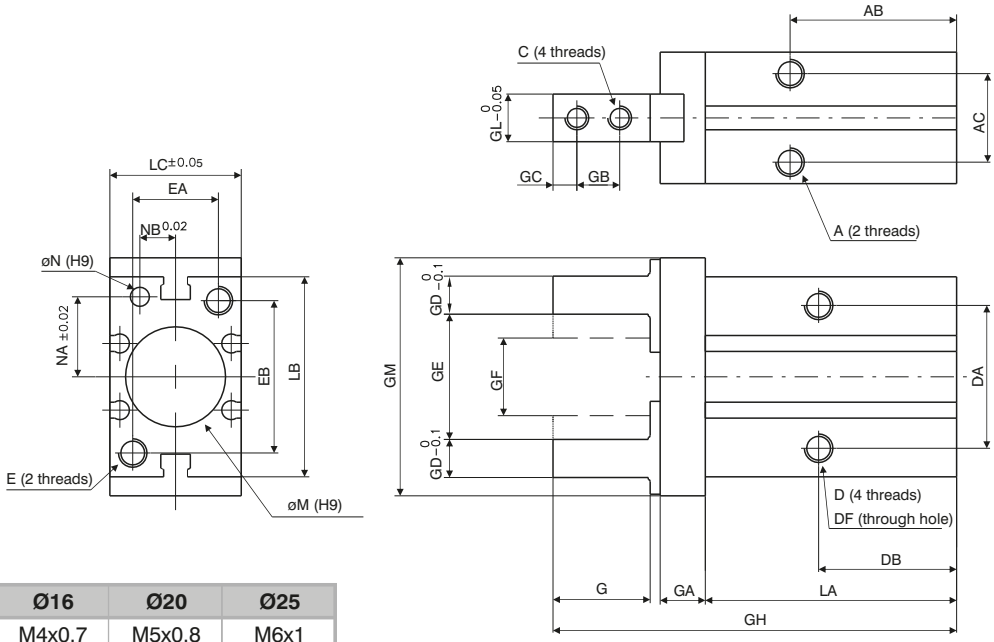

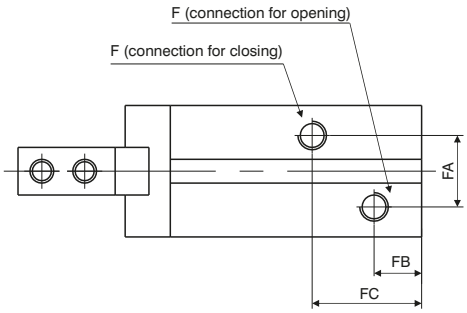

Bore		Ø10	Ø16	Ø20	Ø25
A		M3x0,5	M4x0,7	M5x0,8	M6x1
	Useful depth	6	4,5	8	10
AB		27	30	35	36,5
AC		11,4	16	18,6	22
C		M2,5x0,45	M3x0,5	M4x0,7	M5x0,8
D		M3x0,5	M4x0,7	M5x0,8	M6x1
	Useful depth	5,5	8	10	12
DA		16	24	30	36
DB		23	24,5	29	30
ØDF		2,6	3,4	4,3	5,1
E		M3x0,5	M4x0,7	M5x0,8	M6x1
	Useful depth	6	8	10	12
EA		12	15	18	22
EB		18	22	32	40
F		M3x0,5	M5x0,8	M5x0,8	M5x0,8
FA		11	13	15	20
FB		9	7,5	10	10,7
FC		19	19	23	23,5
G		12	15,5	20	25
GA		6	7,5	9,5	11
GB		5,7	7	9	12
GC		3	4	5	6
GD		4	5	8	10
GE		15,2	20,9	26,3	33,3
GF		11,2	14,9	16,3	19,3
GH		57	67,5	84,8	102,7
GL		5	8	10	12
GM		29	38	50	63
LA		37,8	42,5	52,8	63,6
LB		23	30,6	42	52
LC		16,4	23,6	27,6	33,6
ØM^{H9}		11	17	21	26
	Useful depth	2	2	3	3,5
ØN^{H9}		2	3	4	4
	Useful depth	3	3	4	4
NA		7,6	11	16,8	21,8
NB		5,2	6,5	7,5	10
P		5,4	5,8	9	11,5
PA		/	11,6	14	19
PP		/	2,1	2,1	3,5
Weight (g)		55	120	230	425

Sensor slot detail

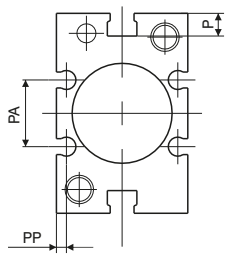

Ø16 - Ø25

Sensor slot detail type "C"

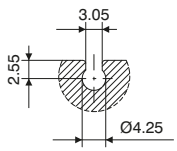

Ø10 - Ø25

Sensor slot detail type "B"

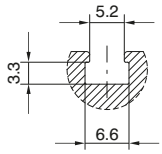

Overall dimensions and technical information are provided solely for informative purposes and may be modified without notice

Operating criteria

Holding force (N) (pressure 5 bar, holding point H=20 half stroke)

Version		Force	Bore Ø10	Ø16	Ø20	Ø25
Double acting		Fe	9,8	30	42	65
		Fi	17	40	66	104
Single acting	N.O.	Fe	6,3	24	28	45
	N.C.	Fi	12	31	56	83

Fe =external holding force **Fi** = internal holding force

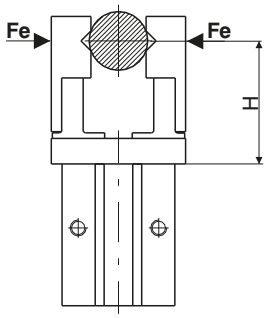

EXTERNAL HOLD

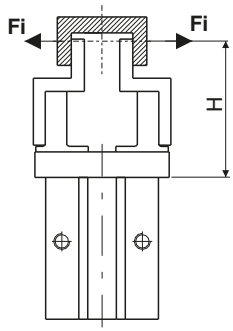

INTERNAL HOLD

	Double acting		Single acting	
	External hold Force	Internal hold Force	External hold Force	Internal hold Force
Ø10	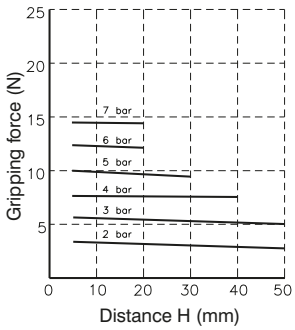	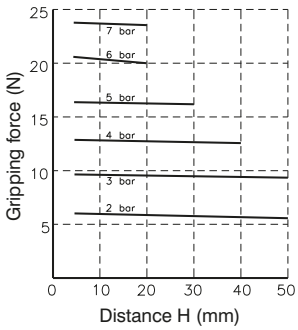	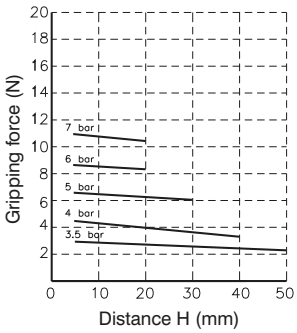	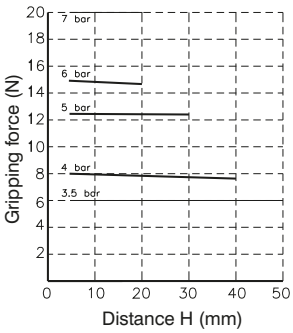
Ø16	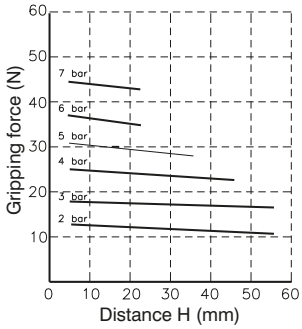	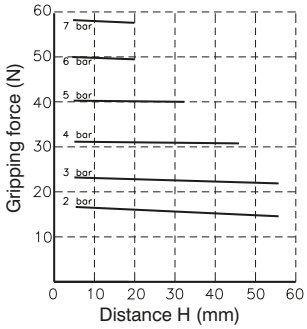	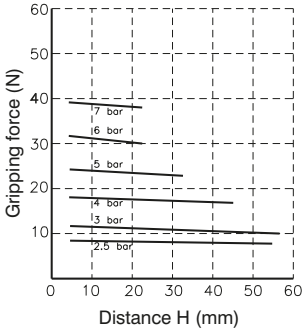	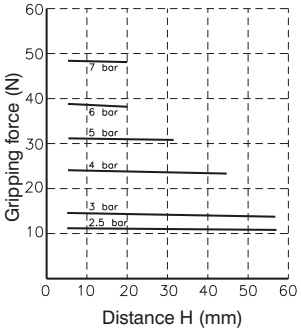
Ø20	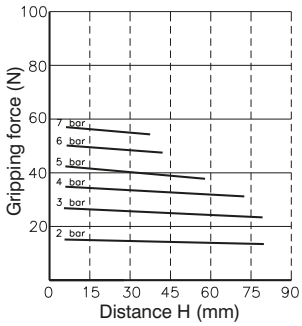	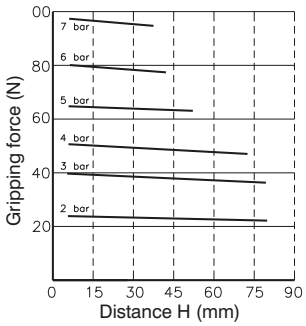	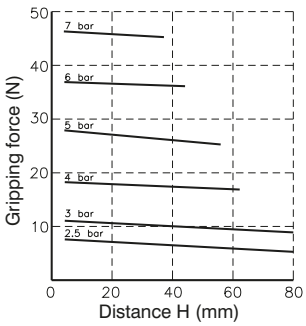	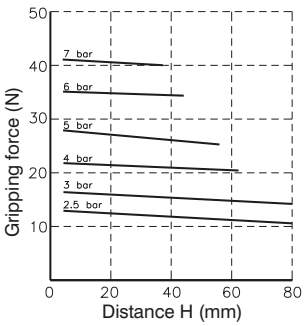
Ø25	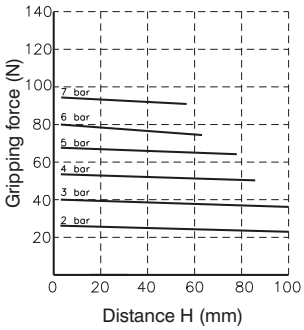	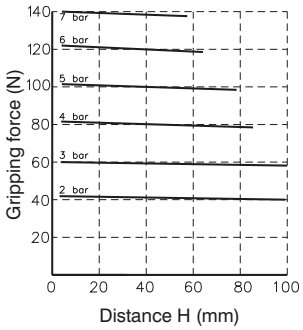	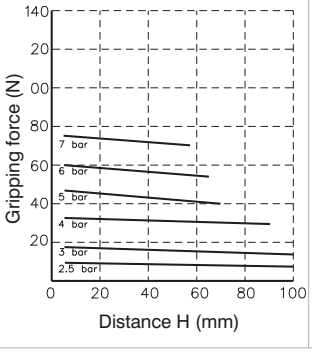	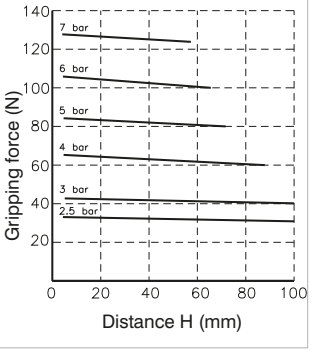

Parallel style pneumatic grippers - Wide opening

Ordering Code

6311.Ø.D. __

- 10
- 16
- 20
- 25
- 32
- 40

Ordering code options	Stroke					
	20	30	40	50	70	100
1	40	60	80	100	120	160
2	60	80	100	120	160	200
	Ø10	**Ø16**	**Ø20**	**Ø25**	**Ø32**	**Ø40**
	Bore					

Construction characteristics

Body	anodised aluminium
Piston	aluminium
Fingers	anodised aluminium
Rod	steel
Rack	steel
Pinion	steel

Operational characteristics

Function	double acting
Fluid	Filtered air. No lubrication needed, if applied it shall be continuous.
Working pressure	Ø10: 1.5 - 6 bar - Ø16 - 40: 1 - 6 bar
Working temperature	-5°C - +70°C

Model	Diameter (mm)	Max.operating frequence cicles/min.	Model	Diameter (mm)	Max.operating frequence cicles/min.
6311.10.D	10	60	6311.25.D	25	60
6311.10.D.1		40	6311.25.D.1		40
6311.10.D.2			6311.25.D.2		
6311.16.D	16	60	6311.32.D	32	30
6311.16.D.1		40	6311.32.D.1		20
6311.16.D.2			6311.32.D.2		
6311.20.D	20	60	6311.40.D	40	30
6311.20.D.1		40	6311.40.D.1		20
6311.20.D.2			6311.40.D.2		

Overall dimensions and technical information are provided solely for informative purposes and may be modified without notice

Overall dimensions

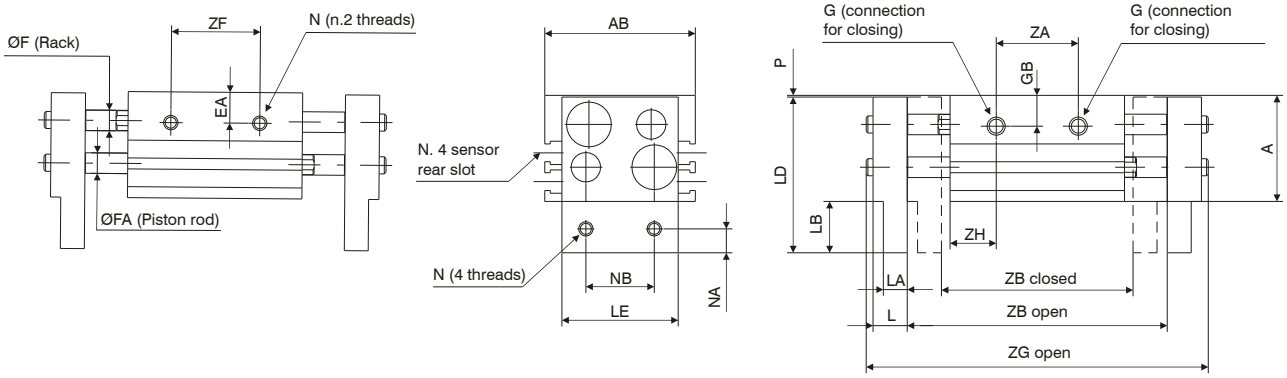

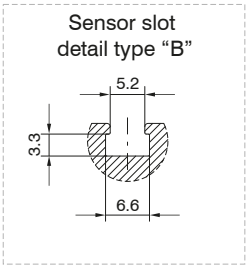

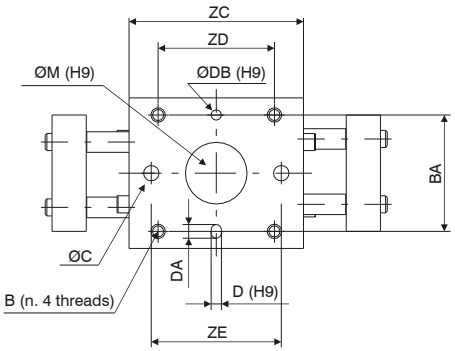

Bore		Ø10			Ø16			Ø20			Ø25			Ø32			Ø40		
A		31			39			46			52			68			79		
AB		44			55			65			76			82			98		
B		M4x0,7			M5x0,8			M6x1			M8x1.25			M8x1.25			M10x1.5		
	Useful depth	8			10			12			16			16			20		
BA		34			42			52			62			64			76		
ØC		4,5			5,5			6,6			9			/			/		
D H9		3			3			4			4			6			6		
	Useful depth	3			3			4			4,5			8			8		
DA		4			4			5			5			7			7		
ØDB H9		3			3			4			4			6			6		
	Useful depth	3			3			4			4,5			8			8		
E		M4x0,7			M5x0,8			M6x1			M8x1.25			M8x1.25			M10x1.5		
	Useful depth	5			7			7			7			11			16		
EA		9			10			11			12,5			22			28		
ØF		6			8			10			12			14			16		
FA		6			8			10			12			16			20		
G		M5x0,8			M5x0,8			M5x0,8			M5x0,8			G1/8			G1/8		
GB		9			10			11			16			16			18		
L		10			13			17			21			24			28		
LA		7			9			12,5			14			15			18		
LB		15			19			24			29			32			38		
LD		45,5			57,5			69			80			100			117		
LE		34			43			54			64			70			86		
ØM H9		18			23			27			32			35			40		
	Useful depth	1,5			1,5			1,5			1,5			1,5			1,5		
N		M4x0,7			M5x0,8			M6x1			M8x1,25			M10x1,5			M10x1,5		
NA		7			8			10			12			15			18		
NB		20			25			30			40			50			60		
P		0,5			0,5			1			1			1			1		
ZA		24	39	57	26	50	70	32	68	88	38	86	104	54	104	148	72	130	170
ZB	closed	56	78	96	68	110	130	82	142	162	100	182	200	150	198	242	188	246	286
	open	76	118	156	98	170	210	122	222	262	150	282	320	220	318	402	288	406	486
ZC		51	67	85	60	90	110	71	113	133	88	142	160	110	158	202	148	206	246
ZD		36	52	70	45	75	95	58	100	120	70	124	142	86	134	178	116	174	214
ZE		38	54	72	40	70	90	54	96	116	66	120	138	/	/	/	/	/	/
ZF		26	42	60	28	58	78	38	80	100	48	102	120	60	108	152	80	138	178
ZG	open	100	142	180	128	200	240	160	260	300	196	328	366	272	370	454	348	466	546
ZH		13,5	14	14	17	20	20	19,5	22,5	22,5	25	28	28	28	27		38		
Weight (g)		280	350	430	600	800	950	1000	1500	1700	1700	2500	2800	2900	3800	4700	5300	6850	7900
		20	40	60	30	60	80	40	80	100	50	100	120	70	120	160	100	160	200
		Stroke																	

Operating criteria

Holding force

	Opening / Closing Stroke			Opening / Closing Stroke	
	Basic Version	Versions 1 & 2		Basic Version	Versions 1 & 2
Ø10	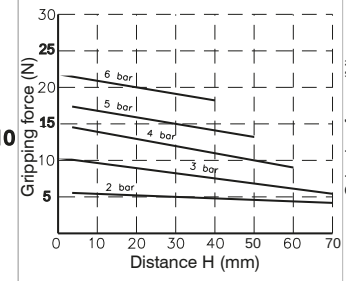	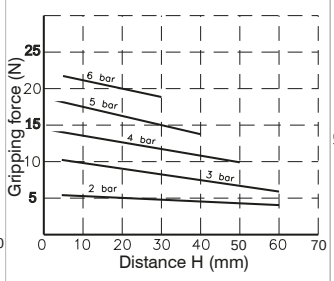	Ø16	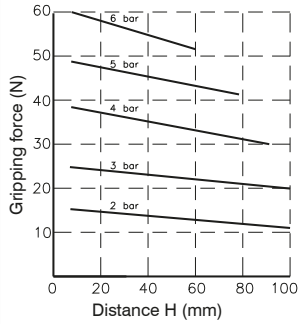	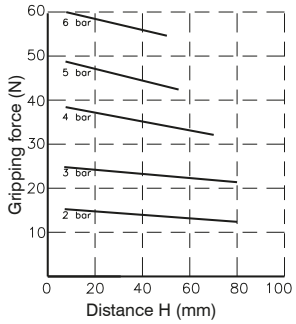
Ø20	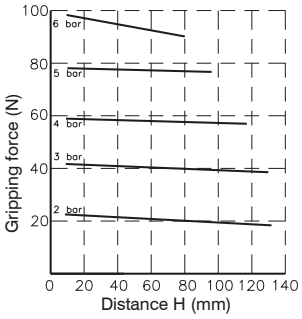	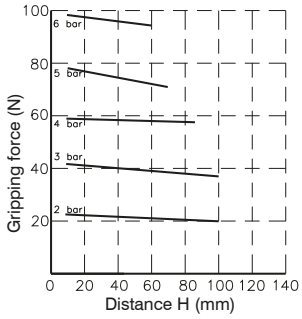	Ø25	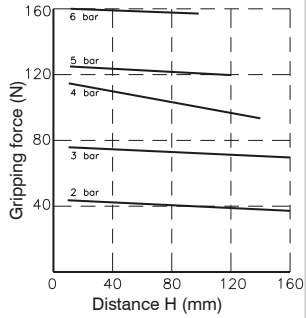	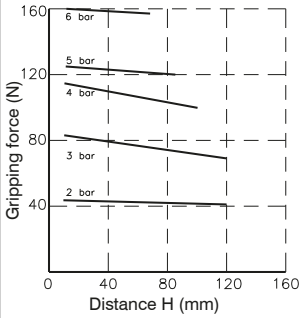
Ø32	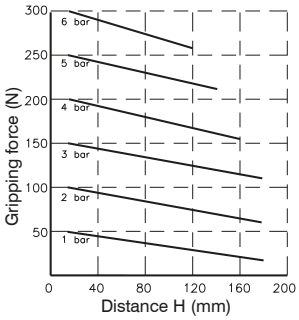	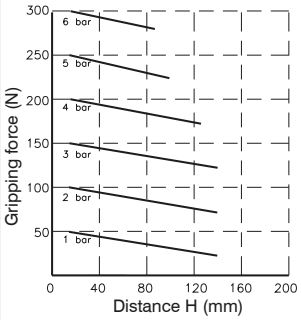	Ø40	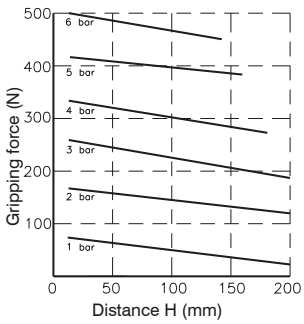	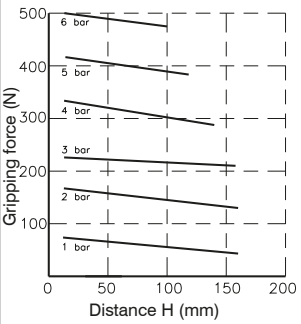

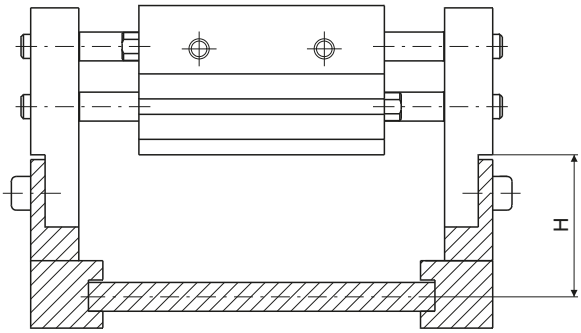

Overall dimensions and technical information are provided solely for informative purposes and may be modified without notice

3 finger parallel style pneumatic grippers

Ordering code

6312.Ø.D

- 16
- 20
- 25
- 32
- 40
- 50
- 63
- 80
- 100
- 125

Construction characteristics

Body	aluminium
Piston	aluminium
Wedge	steel
Fingers	steel

Operational characteristics

Function	double acting
Fluid	Filtered air. No lubrication needed, if applied it shall be continuous.
Working pressure	2 - 6 bar (Ø16 - Ø20 - Ø25) - 1 - 6 bar (Ø32 - Ø125)
Working temperature	-5°C - +70°C
Maximum operating frequency	from Ø 16 to Ø 25, 120 cycles/minute from Ø 32 to Ø 63, 60 cycles/minute from Ø 80 to Ø 125, 30 cycles/minute

Overall dimensions Ø16 - Ø25

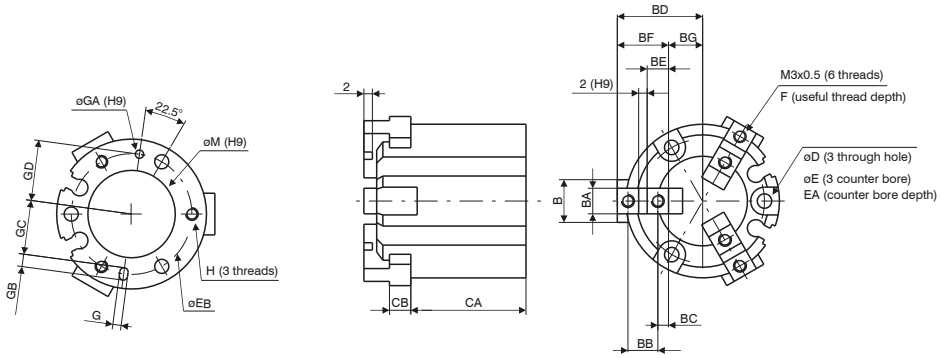

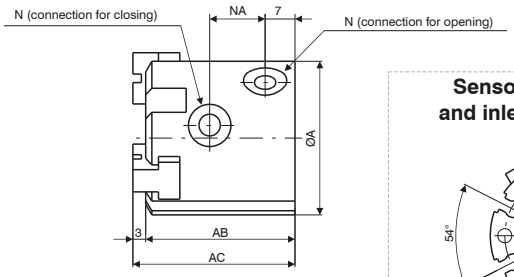

Sensor slots detail and inlet connections

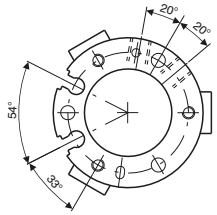

Sensor slot detail type "C"

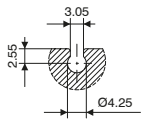

Bore		Ø16	Ø20	Ø25
ØA		30	36	42
AB		32	35	37
AC		35	38	40
B		8	10	12
BA h9		5	6	6
BB		6	7	8
BC		2	2,5	3
BD	open	17	20	24
	close	15	18	21
BE		4	5	6
BF		10	12	14
BG	open	7	8	10
	close	5	6	7
CA		25	27	28
CB		4	5	5
D		3,4	3,4	4,5
E		6,5	6,5	8
EA		8	9,5	10
EB		25	29	34
F		5	6	6
G H9		2	2	3
	Useful depth	2	2	3
ØGA H9		2	2	3
	Useful depth	2	2	3
GB		3	3	5
GC		11	13	14,5
GD		12,5	14,5	17
H		M3x0,5	M3x0,5	M4x0,7
	Useful depth	4,5	6	6
ØM H9		17	21	26
	Useful depth	1,5	1,5	1,5
N		M3x0,5	M5x0,8	M5x0,8
NA		11	13	15
Weight (g)		62	98	139

Overall dimensions Ø32 and Ø80

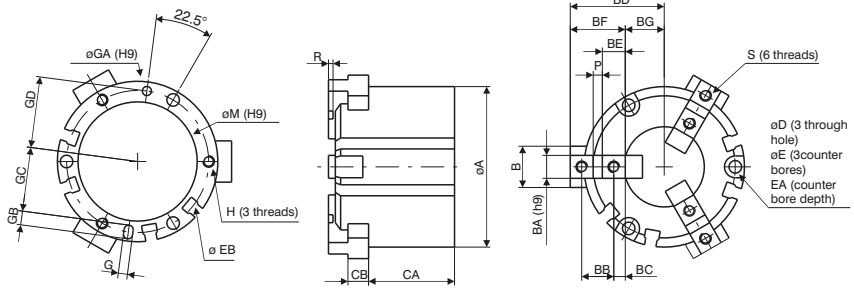

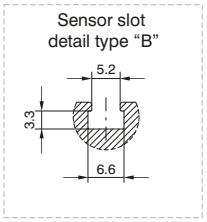

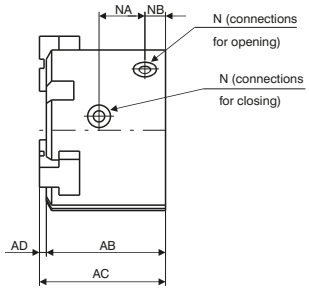

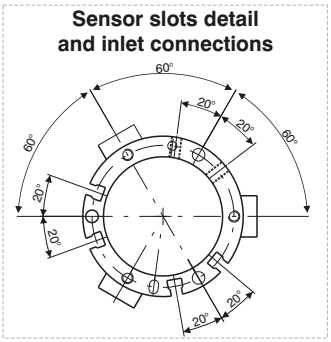

Bore		Ø32	Ø40	Ø50	Ø63	Ø80
ØA		52	62	70	86	106
AB		41	44	52	62	77
AC		44	47	55	66	82
AD		3	3	3	4	5
B		14	16	18	24	28
BA h9		8	8	10	12	14
BB		11	12	14	17	20
BC		4,5	4,5	5	5,5	6
BD	open	32	35	41	51	63,5
	close	28	31	35	43	53,5
BE		9	9	10	11	12
BF		20	21	24	28	32
BG	open	12	14	17	23	31,5
	close	8	10	11	15	21,5
CA		30,5	32	37,5	44	56
CB		6	7	9	11	12
D		4,5	5,5	5,5	6,6	6,6
E		8	9,5	9,5	11	11
EA		9	9	12	14	19
EB		44	53	62	76	95
H		M4x0,7	M5x0,8	M5x0,8	M6x1	M6x1
	Useful depth	6	7,5	10	9	12
G H9		3	4	4	5	6
	Useful depth	3	4	4	5	6
ØGA H9		3	4	4	5	6
	Useful depth	3	4	4	5	6
GB		5	6	6	7	8
GC		19,5	23,5	28	34,5	43,5
GD		22	26,5	31	38	47,5
N		M5x0,8	M5x0,8	M5x0,8	M5x0,8	G1/8
ØM H9		34	42	52	65	82
	Useful depth	2	2	2	2,5	3
NA		16	17	20	22	27
NB		8	9	9	12	13,5
P h9		2	3	4	6	8
R		2	2	2	3	4
S		M4x0,7	M4x0,7	M5x0,8	M5x0,8	M6x1
	Useful depth	8	8	10	10	12
Weight (g)		240	354	542	1000	1850

Overall dimensions Ø100 and Ø125

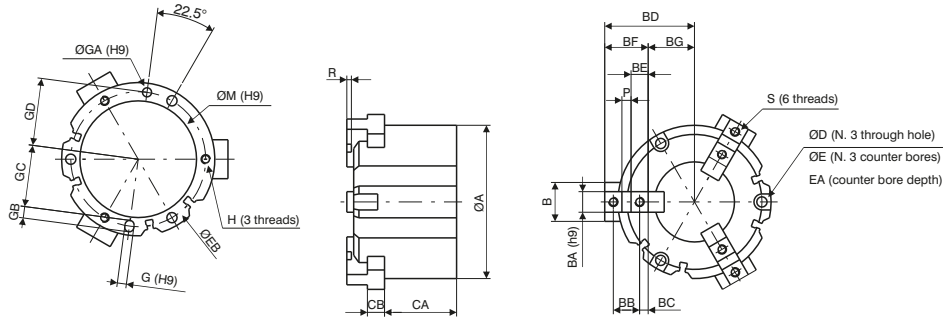

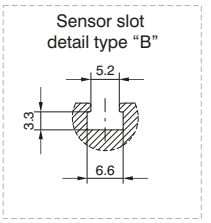

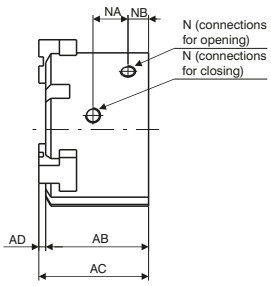

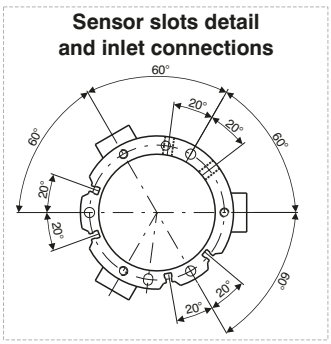

Bore		Ø100	Ø125
ØA		134	166
AB		90	114
AC		96	122
AD		6	8
B		34	40
BA h9		18	22
BB		23	31
BC		7,5	10,5
BD	open	78	98
	close	66	82
BE		15	21
BF		38	52
BG	open	40	46
	close	28	30
CA		63	84
CB		15	18
ØD		9	11
ØE		14	17,5
EA		21	34
EB		118	148
G H9		8	10
	Useful depth	6	8
ØGA H9		8	10
	Useful depth	6	8
GB		10	12
GC		54	68
GD		59	74
H		M8x1,25	M10x1,5
	Useful depth	16	20
ØM H9		102	130
	Useful depth	4	6
N		G1/4	G3/8
NA		30,6	38
NB		18	23,5
P h9		8	10
R		4	6
S		M8x1,25	M10x1,5
	Useful depth	16	20
Weight (g)		3360	6430

Overall dimensions and technical information are provided solely for informative purposes and may be modified without notice

Gripping force (N)

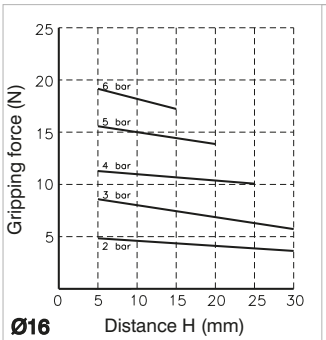

Ø16

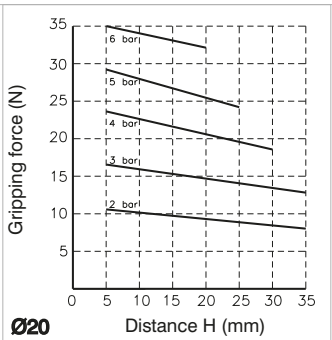

Ø20

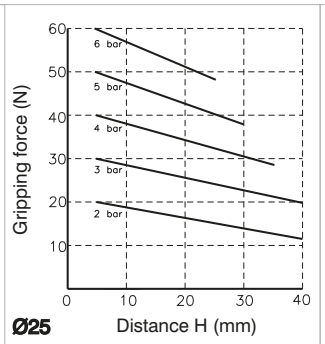

Ø25

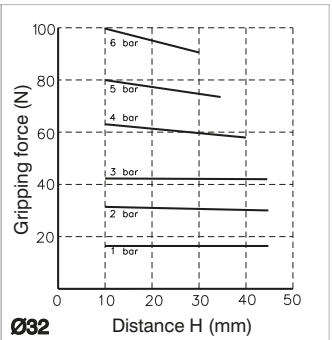

Ø32

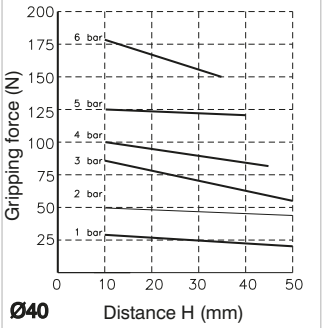

Ø40

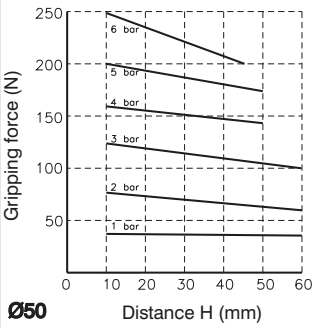

Ø50

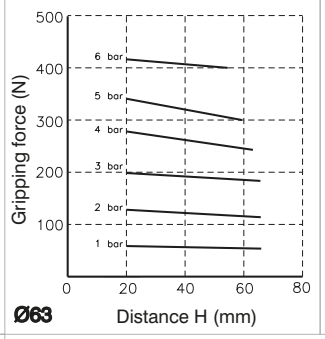

Ø63

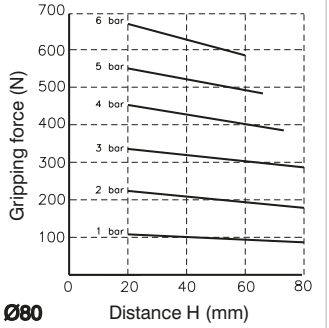

Ø80

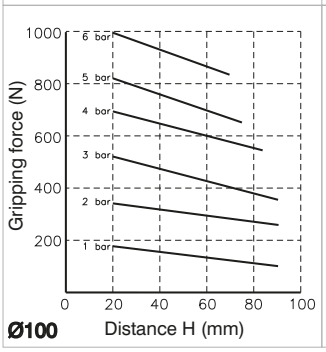

Ø100

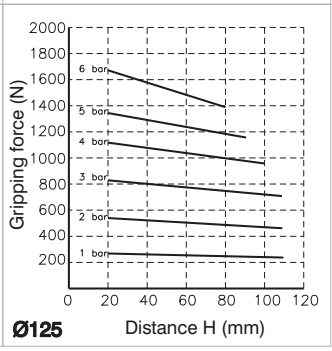

Ø125

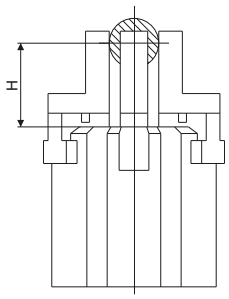

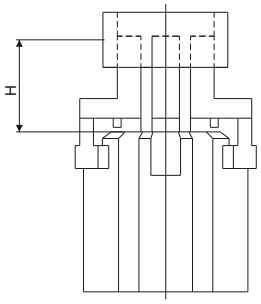

Series SA

General

The limit switches, or magnetic sensors, must be mounted on cylinders with magnetic piston.
These, when hit by the magnetic field generated by the piston as it approaches, close the circuit sending an electrical signal to relay, solenoid valve or converse with the controlling electronic system of the machine. There are both ampulla Reed and Hall effect magnetic sensor available. The sensors are attached to the cylinder by a proper clamp, slot or adapter and may have an activation LED indicator.

Note: The magnetic sensors are according to the Directive **EMC 89/336/CEE** and following amendments.

Instruction on how to use the sensors properly

Particular attention should be paid in order not to exceed the wide operating limits shown in the next pages. Besides, the 2 wires sensors have never to be connected to the mains if a load has not been yet connected in series. These are the only cares that, if not followed, may cause damages to the sensor. Besides, please consider that, while loading, the current absorbed by the sensors might be 50% higher that the rated one.
In case of direct current (DC) feeding, the polarity of the connection must be observed: the brown cable must be connected to the plus (+) and the blue one to the minus (-).
For all sensors, particular attention has to be paid to external factors (like, for example, nearby live cables, electromagnetic fields generated by electric motors, nearby metallic bodies, etc.) since they can affect the magnetic field generated by the magnet inside the piston and therefore causing malfunctions.
Electrical cable length must be kept below 10 meters in order to guarantee proper functioning.
If needed, 10 meters cable length can be exceeded; Pneumax suggests the use of an inductor or resistor in series to the load in order to reduce the capacitive behavior of the cable.
In this case, the customer is responsible for the selection of the inductor or resistor value. Pneumax assume no responsibility in case of malfunction.
When using a two wire Reed type sensor always ensure that the correct load is applied in series on any of the two wires.
When using a sensor fitted with the SNAP connector pay attention to the orientation of the connector (see fig. page 6.6) because by inverting the connection the circuit will not be damaged, but the LED will not turn on. In case two or more sensors need to be connected in series, pay attention to the voltage drop generated (around 3V for each sensor), and, in case, use the version designed for in series connection.
Hall effect sensors are longer lasting if compared to the Reed version since they do not include any moving mechanical part.

Overall dimensions and technical information are provided solely for informative purposes and may be modified without notice

Sensors with 2 wires cable (PUR Ø4,2 mm 2x0,34 mm²)

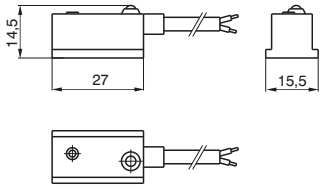

Slot detail
type "A"

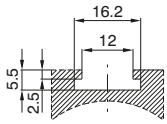

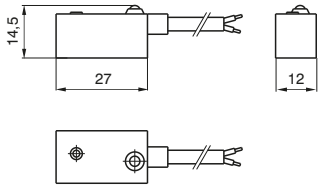

Diagrams and connections

Ordering code

Cylinders and microbore cylinders	**1500.AC**	sensor for alternating current with led
	1500.DC	sensor for continuous current with led
	1500. U	universal sensor with led
	1500.U/1	universal sensor without led (REED ampulla only)
Rodless cylinders	**1600.AC**	sensor for alternating current with led
	1600.DC	sensor for continuous current with led
	1600.U	universal sensor with led
	1600.U/1	universal sensor without led (REED ampulla only)

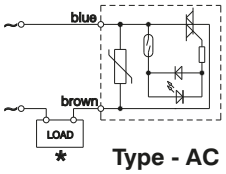

Type - AC

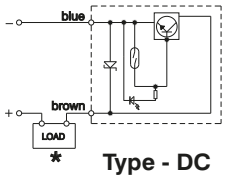

Type - DC

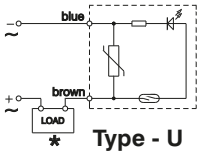

Type - U

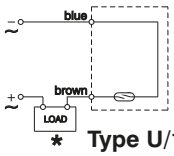

Type U/1

Technical characteristics	A.C.	D.C.	U		U/1	
			a.c.	d.c.	a.c.	d.c.
Maximum permanent current	1,5A	1,2A	0,5A		0,3A	
Maximum current (pulses of 0,5 sec.)	6A	1,5A	1A		0,8A	
Voltage range	12 - 230V	12 - 30V	3 - 230V	12 - 48V	0 - 230V	0 - 48V
Maximum permanent power	375VA	32W	20VA	15W	10VA	8W
Working temperature	-20° C - 70°C					
Maximum voltage drop	3V max	2V max	3V max		0V	
Cable section	2x0,34 mm² Ø4,2 mm PUR					
Degree of protection	IP 65					
Connecting time	2 ms					
Disconnecting time	1 ms					
Average working period	10^7 cicles					
Repetition of intervention point	± 0,1 mm					
Type of contact	N.O.					

✱The load (LOAD) can be connected either to negative or positive pole.

These sensors can be used on cylinders series:

SERIES	DESCRIPTION	MOUNTED
1200	for microbore with threaded end covers and "TECNO-MIR" microbore	with clamps code 1260.Ø.F
	for microbore "MIR" with rolled end covers, cylinders from Ø16 to Ø32	with clamps code 1280.Ø.F
	for microbore "MIR-INOX" with rolled end covers	with clamps code 1280.Ø.FX
1306 - 1307 - 1308	for cylinders from Ø32 to Ø63	with brackets code 1306.A
	for cylinders from Ø80 to Ø125	with brackets code 1306.B
	for cylinders from Ø160 to Ø200	with brackets code 1306.C
1315	for cylinders Ø250 and Ø320 (ISO)	with brackets code 1306.D
1319 - 1320	for cylinders Ø32 and Ø40	with brackets code 1320.A
	for cylinders Ø50 and Ø63	with brackets code 1320.B
	for cylinders Ø80 and Ø100	with brackets code 1320.C
	for cylinders Ø125	with brackets code 1320.D
	for cylinders Ø160	with brackets code 1320.E
	for cylinders Ø200	with brackets code 1320.F
1390 - 1391	for cylinders ECOLIGHT Ø32 and Ø40	with brackets code 1390.A
	for cylinders ECOLIGHT Ø50 and Ø63	with brackets code 1390.B
	for cylinders ECOLIGHT Ø80 and Ø100	with brackets code 1390.C
	for cylinders ECOLIGHT Ø125 - Ø200	with brackets code 1390.D
1500	Compact cylinders "Europe" (from Ø32)	directly on groove
1605	Rodless cylinders	with brackets code 1600.A

Overall dimensions and technical information are provided solely for informative purposes and may be modified without notice

2 pin sensor for SNAP connector

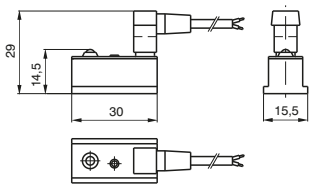

for cylinders and microbore

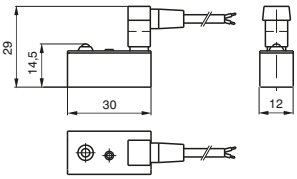

for rodless cylinders

Slot detail
type "A"

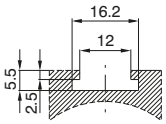

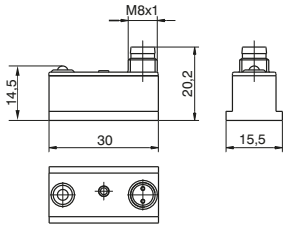

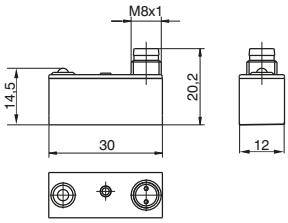

Ordering code

Cylinders and microbore	**RS.DC**	sensor for continuous current with led normally open N.O.
	RS.UA	universal sensor with led normally open N.O.
	RS.UC	universal sensor with led normally closed N.C.
	RS.UA/1	universal sensor without led N.O. (REED ampulla only)
Rodless cylinders	**SRS.DC**	sensor for continuous current with led normally open N.O.
	SRS.UA	universal sensor with led N.O.
	SRS.UC	universal sensor with led normally closed N.C.
	SRS.UA/1	universal sensor without led N.O.
Cable	**C1**	connector with 2.5 m. cable 2 wires (PVC Ø3,5 mm 2x 0,25mm^2)
	C2	connector with 5 m. cable 2 wires (PVC Ø3,5 mm 2x 0,25mm^2)
	C3	connector with 10 m. cable 2 wires (PVC Ø3,5 mm 2x 0,25mm^2)

2 pin sensor for SNAP connector + C1 cable 2 wires (PVC Ø3.5 mm 2x0.25 mm^2)

Cylinders and microbore	**RS.DCC1**	sensor for DC current N.O. with LED and 2.5 m. cable
	RS.UAC1	universal sensor with led N.O. with connector and 2.5 m. cable
	RS.UCC1	universal sensor with led N.C. with connector and 2.5 m. cable
	RS.UAC1/1	universal sensor without led N.O. with connector and 2.5 m. cable (REED ampulla only)
Rodless cylinders	**SRS.DCC1**	sensor for continuous current with led normally closed N.O. with connector and 2.5 m. cable
	SRS.UAC1	universal sensor with led N.O. with connector and 2.5 m. cable
	SRS.UCC1	universal sensor with led N.C. with connector and 2.5 m. cable
	SRS.UAC1/1	universal sensor without led N.O. with connector and 2.5 m. cable (REED ampulla only)

2 pin sensor with M8 connettor

Cylinders and microbore	**RS8.DC**	sensor for DC current N.O. with LED and M8 plug
	RS8.UA	universal sensor N.O. with LED and M8 plug
	RS8.UC	universal sensor N.C. with LED and M8 plug
Rodless cylinders	**SRS8.DC**	sensor for DC current N.O. with LED and M8 plug
	SRS8.UA	universal sensor N.O. with LED and M8 plug
	SRS8.UC	universal sensor N.C. with LED and M8 plug
Cable	**MCH1**	cable 3 wires l=2.5m with M8 connector three wires (PUR Ø2.6 mm 3x 0.15 mm^2)
	MCH2	cable 3 wires l=5m with M8 connector three wires (PUR Ø2.6 mm 3x 0.15 mm^2)
	MCH3	cable 3 wires l=10m with M8 connector three wires (PUR Ø2.6 mm 3x 0.15 mm^2)

Overall dimensions and technical information are provided solely for informative purposes and may be modified without notice

3 pin sensor for SNAP connector with 2 wires according to IEC 947 norms

Cylinders and microbore	**RS.DCNO**	sensor for continuous current with led normally open N.O., according to standard IEC 947
	RS.UANO	universal sensor with led normally open N.O., according to standard IEC 947
Cable	**C1NO**	connector with 2.5 m. cable, according to standard IEC 947 (PVC Ø3.5 mm 2x0.25 mm²)
	C2NO	connector with 5 m. cable, according to standard IEC 947 (PVC Ø3.5 mm 2x0.25 mm²)
	C3NO	connector with 10 m. cable, according to standard IEC 947 (PVC Ø3.5 mm 2x0.25 mm²)

3 pin sensors for in series assembling with SNAP connector

Cylinders and microbore	**RS.UA/1L**	universal sensor with led normally open N.O., for series assembly (3 wires)
Rodless cylinders	**SRS.UA/1L**	universal sensor with led N.O., for series assembly (3 wires)
Cable	**CH1**	connector with 2.5 m. cable 3 wires (PVC Ø3.5 mm 3x0.25 mm²)
	CH2	connector with 5 m. cable 3 wires (PVC Ø3.5 mm 3x0.25 mm²)
	CH3	connector with 10 m. cable 3 wires (PVC Ø3.5 mm 3x0.25 mm²)

3 pin sensors for in series assembling with SNAP conn. + CH1 cable 3 wires (PVC ø3.5mm 3x0.25 mm²)

Cylinders and microbore	**RS.UACH1/1L**	universal sensor with led N.O. with connector and 2.5 m. cable, for series mounting (3 wires)
Rodless cylinders	**SRS.UACH1/1L**	universal sensor with led N.O. with connector and 2.5 m. cable, for series assembly (3 wires)

3 pin sensors for in series assembling with M8 connector

Cylinders and microbore	**RS8.UA/1L**	universal sensor N.O. with LED for in series assembling (3wires) and M8 plug
Rodless cylinders	**SRS8.UA/1L**	universal sensor N.O. with LED for in series assembling (3wires) and M8 plug
Cable	**MCH1**	M8 connector with 2.5 m. cable 3 wires (PUR Ø2.6 mm 3x 0.15 mm²)
	MCH2	M8 connector with 5 m. cable 3 wires (PUR Ø2.6 mm 3x 0.15 mm²)
	MCH3	M8 connector with 10 m. cable 3 wires (PUR Ø2.6 mm 3x 0.15 mm²)

For sensors according to IEC 947 Standard	For 3 wires SNAP & M8 sensors	For 2 wires SNAP sensors
Connection 2 wires 3 PIN	*Connection 3 wires 3 PIN*	*Connection 2 wires 2 PIN*

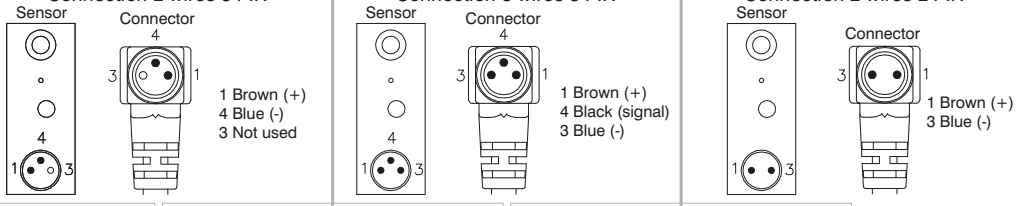

SNAP code connectors		M8 code connectors		SNAP code connectors		M8 code connectors		SNAP code connectors	
C1NO	Ø 3.5 mm	MC1	Ø 2.6 mm	CH1	Ø 3.5 mm	MCH1	Ø 2.6 mm	C1	Ø 3.5 mm
C2NO	PVC	MC2	PUR	CH2	PVC	MCH2	PUR	C2	PVC
C3NO	2x 0.25 mm²	MC3	2x 0.15 mm²	CH3	3x 0.25 mm²	MCH3	3x 0.15 mm²	C3	2x 0.25 mm²

Technical characteristics	DC	UA				UA/1L		UA/1	
		a.c.		d.c.		a.c.	d.c.	a.c.	d.c.
Type of contact	N.O.	N.O.	N.C.	N.O.	N.C.	N.O.		N.O.	
Maximum permanent current	1.2A	0.5A	0.3A	0.5A	0.3A	0.5A		0.5A	
Maximum current (pulses of 0.5 sec.)	1.5A	1A	0.8A	1A	0.8A	1A		1A	
Voltage range	12 - 30V	3 - 250V	3 - 110V	12 - 48V		24V		0 - 250V	0 - 48V
Maximum permanent power	32W	20VA	10VA	15W	8W	20VA	15W	10VA	8W
Working temperature	-20°C - 70°C								
Maximum voltage drop	2V	<3V				0V			
Cables number	2					3		2	
Degree of protection	IP65								
Connecting time	2 ms								
Disconnecting time	1 ms								
Average working period	10^7 cicles								
Repetition of intervention point	±0.1 mm								

Diagrams and connections

Type - UA

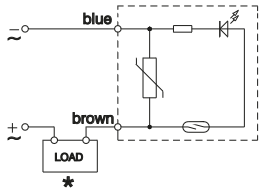

Type UA/1

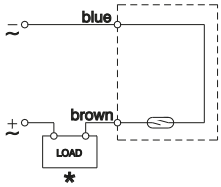

Type - UA/1L

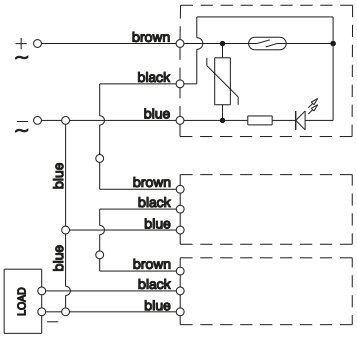

Type - DC

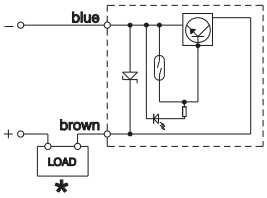

Type - DCNO

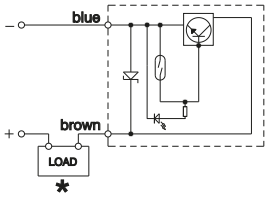

Type - UC

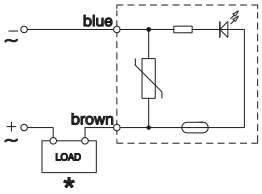

✱The load (LOAD) can be connected either to negative or positive pole.

These sensors can be used on cylinders series:

SERIES	DESCRIPTION	MOUNTED
1200	for microbore with threaded end covers and “TECNO-MIR” microbore	with clamps code 1260.Ø.F
	for microbore "MIR" with rolled end covers, cylinders from Ø16 to Ø32	with clamps code 1280.Ø.F
	for microbore "MIR-INOX" with rolled end covers	with clamps code 1280.Ø.FX
1306 - 1307 - 1308	for cylinders from Ø32 to Ø63	with brackets code 1306.A
	for cylinders from Ø80 to Ø125	with brackets code 1306.B
	for cylinders from Ø160 to Ø200	with brackets code 1306.C
1315	for cylinders Ø250 and Ø320 (ISO)	with brackets code 1306.D
1319 - 1320	for cylinders Ø32 and Ø40	with brackets code 1320.A
	for cylinders Ø50 and Ø63	with brackets code 1320.B
	for cylinders Ø80 and Ø100	with brackets code 1320.C
	for cylinders Ø125	with brackets code 1320.D
	for cylinders Ø160	with brackets code 1320.E
	for cylinders Ø200	with brackets code 1320.F
1390 - 1391	for cylinders ECOLIGHT Ø32 and Ø40	with brackets code 1390.A
	for cylinders ECOLIGHT Ø50 and Ø63	with brackets code 1390.B
	for cylinders ECOLIGHT Ø80 and Ø100	with brackets code 1390.C
	for cylinders ECOLIGHT Ø125 - Ø200	with brackets code 1390.D
1500	Compact cylinders "Europe" (from Ø32)	directly on groove
1605	Rodless cylinders	with brackets code 1600.A

Overall dimensions and technical information are provided solely for informative purposes and may be modified without notice

Sensors with 3 wires cable PUR ø 4.2 mm 3x0.34mm²)

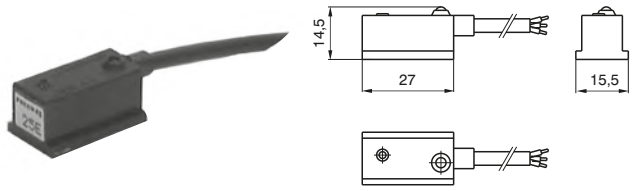

Slot detail
type "A"

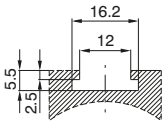

for cylinders and microbore

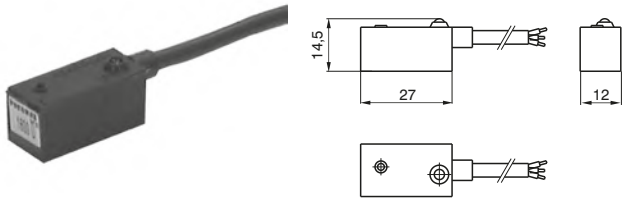

for rodless cylinders

Ordering code

Cylinders and microbore	**1500.HAP**	PNP sensor Hall effect with led, normally open N.O.
	1500.HAN	NPN sensor Hall effect with led, normally open N.O.
Rodless cylinders	**1600.HAP**	PNP sensor Hall effect with led, normally open N.O.
	1600.HAN	NPN sensor Hall effect with led, normally open N.O.

Technical characteristics

Maximum permanent current	0.5A
Voltage range	10 - 30V DC
Power (inductive load)	10W
Maximum voltage drop	2V
Working temperature	-20°C - 70°C
Cable section	PUR 4.2mm 3x0.34 mm²
Degree of protection	IP 65
Connecting time	0.8 µs
Disconnecting time	0.3 µs
Average working period	10⁹ cicles
Repetition of intervention point	± 0.1 mm
Type of contact	N.O.

Diagrams and connections

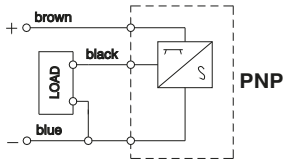

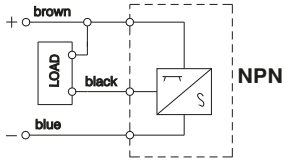

These sensors can be used on cylinders series:

SERIES	DESCRIPTION	MOUNTED
1200	for microbore with threaded end covers and "TECNO-MIR" microbore	with clamps code 1260.Ø.F
	for microbore "MIR" with rolled end covers, cylinders from Ø16 to Ø32	with clamps code 1280.Ø.F
	for microbore "MIR-INOX" with rolled end covers	with clamps code 1280.Ø.FX
1306 - 1307 - 1308	for cylinders from Ø32 to Ø63	with brackets code 1306.A
	for cylinders from Ø80 to Ø125	with brackets code 1306.B
	for cylinders from Ø160 to Ø200	with brackets code 1306.C
1315	for cylinders Ø250 and Ø320 (ISO)	with brackets code 1306.D
1319 - 1320	for cylinders Ø32 and Ø40	with brackets code 1320.A
	for cylinders Ø50 and Ø63	with brackets code 1320.B
	for cylinders Ø80 and Ø100	with brackets code 1320.C
	for cylinders Ø125	with brackets code 1320.D
	for cylinders Ø160	with brackets code 1320.E
	for cylinders Ø200	with brackets code 1320.F
1390 - 1391	for cylinders ECOLIGHT Ø32 and Ø40	with brackets code 1390.A
	for cylinders ECOLIGHT Ø50 and Ø63	with brackets code 1390.B
	for cylinders ECOLIGHT Ø80 and Ø100	with brackets code 1390.C
	for cylinders ECOLIGHT Ø125 - Ø200	with brackets code 1390.D
1500	Compact cylinders "Europe" (from Ø32)	directly on groove
1605	Rodless cylinders	with brackets code 1600.A

3 PIN sensor for SNAP connector

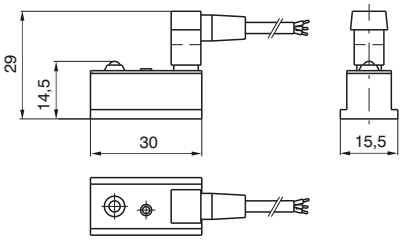

for cylinders and microbore

Slot detail type "A"

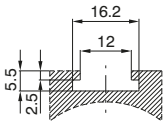

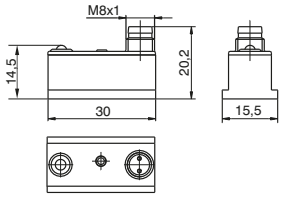

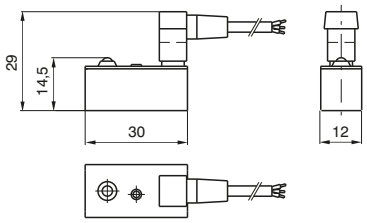

for rodless cylinders

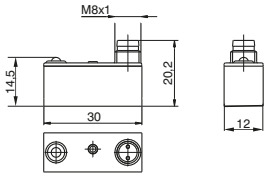

Ordering code

Cylinders and microcylinders	**HS.PA**	PNP sensor Hall effect with led, normally open N.O.
Rodless cylinders	**SHS.PA**	PNP sensor Hall effect with led, normally open N.O.
Cable	**CH1**	connector with 2.5 m. cable 3 wires (PVC Ø3.5 mm 3x0.25 mm^2)
	CH2	connector with 5 m. cable 3 wires (PVC Ø3.5 mm 3x0.25 mm^2)
	CH3	connector with 10 m. cable 3 wires (PVC Ø3.5 mm 3x0.25 mm^2)

3 PIN sensor for SNAP connector + CH1 cable 3 wires (PVC ø3.5 mm 3x0.25 mm^2)

Cylinders and microbore	**HS.PAC1**	PNP sensor Hall effect N.O. with led, with connector and 2.5 m. cable
Rodless cylinders	**SHS.PAC1**	PNP sensor Hall effect N.O. with led, with connector and 2.5 m. cable

3 PIN sensor for M8 connector

Cylinders and microbore	**HS8.NA**	NPN Hall effect sensor N.O. with LED and M8 plug
	HS8.PA	PNP Hall effect sensor N.O. with LED and M8 plug
Rodless cylinders	**SHS8.NA**	NPN Hall effect sensor N.O. with LED and M8 plug
	SHS8.PA	PNP Hall effect sensor N.O. with LED and M8 plug
Cable	**MCH1**	M8 connector with cable 2.5 m. 3 wires (PUR Ø2.6 mm 3x0.15mm^2)
	MCH2	M8 connector with cable 5 m. 3 wires (PUR Ø2.6 mm 3x0.15mm^2)
	MCH3	M8 connector with cable 10 m. 3 wires (PUR Ø2.6 mm 3x0.15mm^2)

For 3 wires SNAP & M8 sensors

Connection 3 wires 3 PIN

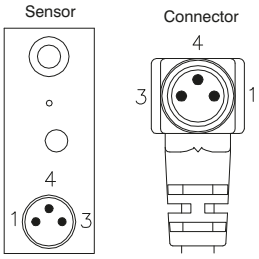

SNAP code connectors	
CH1	Ø 3.5 mm
CH2	PVC
CH3	3x 0.25 mm^2

M8 code connectors	
MCH1	Ø 2.6 mm
MCH2	PUR
MCH3	3x 0.15 mm^2

Overall dimensions and technical information are provided solely for informative purposes and may be modified without notice

Technical characteristic

Maximum permanent current	0,25A
Voltage range	6 - 30V DC
Power (inductive load)	6W
Maximum Voltage drop	2V
Working temperature	-20°C - 70°C
Cables number	3
Degree of protection	IP 65
Connecting time	0,8 ms
Disconnecting time	0,3 ms
Average working period	10^9 cicles
Repetition of intervention point	± 0,1 mm
Contact normally open	N.O.

Diagrams and connections

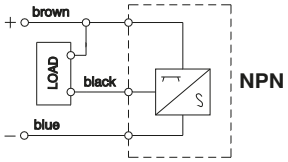

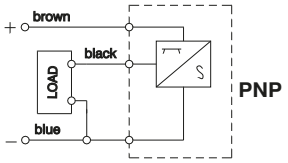

These sensors can be used on cylinders series:

SERIES	DESCRIPTION	MOUNTED
1200	for microbore with threaded end covers and “TECNO-MIR” microbore	with clamps code 1260.Ø.F
	for microbore "MIR" with rolled end covers, cylinders from Ø16 to Ø32	with clamps code 1280.Ø.F
	for microbore "MIR-INOX" with rolled end covers	with clamps code 1280.Ø.FX
1306 - 1307 - 1308	for cylinders from Ø32 to Ø63	with brackets code 1306.A
	for cylinders from Ø80 to Ø125	with brackets code 1306.B
	for cylinders from Ø160 to Ø200	with brackets code 1306.C
1315	for cylinders Ø250 and Ø320 (ISO)	with brackets code 1306.D
1319 - 1320	for cylinders Ø32 and Ø40	with brackets code 1320.A
	for cylinders Ø50 and Ø63	with brackets code 1320.B
	for cylinders Ø80 and Ø100	with brackets code 1320.C
	for cylinders Ø125	with brackets code 1320.D
	for cylinders Ø160	with brackets code 1320.E
	for cylinders Ø200	with brackets code 1320.F
1390 - 1391	for cylinders ECOLIGHT Ø32 and Ø40	with brackets code 1390.A
	for cylinders ECOLIGHT Ø50 and Ø63	with brackets code 1390.B
	for cylinders ECOLIGHT Ø80 and Ø100	with brackets code 1390.C
	for cylinders ECOLIGHT Ø125 - Ø200	with brackets code 1390.D
1500	Compact cylinders "Europe" (from Ø32)	directly on groove
1605	Rodless cylinders	with brackets code 1600.A

Series SR - SU - SQ - ST

General

The limit switches, or magnetic sensors, must be mounted on cylinders with magnetic piston.
These, when hit by the magnetic field generated by the piston as it approaches, close the circuit sending an electrical signal to relay, solenoid valve or converse with the controlling electronic system of the machine. There are both ampulla Reed and Hall effect magnetic sensor available. The sensors are attached to the cylinder by a proper clamp, slot or adapter and may have an activation LED indicator.

Note: The magnetic sensors are according to the Directive **EMC 89/336/CEE** and following amendments.

Instruction on how to use the sensors properly

Particular attention should be paid in order not to exceed the wide operating limits shown in the next pages. Besides, the 2 wires sensors have never to be connected to the mains if a load has not been yet connected in series. These are the only cares that, if not followed, may cause damages to the sensor. Besides, please consider that, while loading, the current absorbed by the sensors might be 50% higher that the rated one.
In case of direct current (DC) feeding, the polarity of the connection must be observed: the brown cable must be connected to the plus (+) and the blue one to the minus (-).
For all sensors, particular attention has to be paid to external factors (like, for example, nearby live cables, electromagnetic fields generated by electric motors, nearby metallic bodies, etc.) since they can affect the magnetic field generated by the magnet inside the piston and therefore causing malfunctions.
Electrical cable length must be kept below 10 meters in order to guarantee proper functioning.
If needed, 10 meters cable length can be exceeded; Pneumax suggests the use of an inductor or resistor in series to the load in order to reduce the capacitive behavior of the cable.
In this case, the customer is responsible for the selection of the inductor or resistor value. Pneumax assume no responsibility in case of malfunction.
When using a two wire Reed type sensor always ensure that the correct load is applied in series on any of the two wires.
In case two or more sensors need to be connected in series, pay attention to the voltage drop generated (around 3V for each sensor), and, in case, use the version designed for in series connection.
Hall effect sensors are longer lasting if compared to the Reed version since they do not include any moving mechanical part.

Overall dimensions and technical information are provided solely for informative purposes and may be modified without notice

Sensor with 2.5 m. cable

Weight g 27

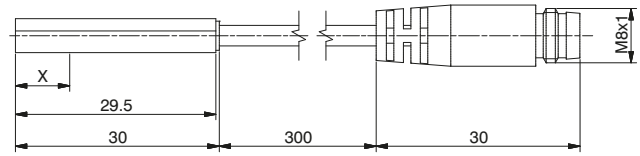

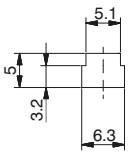

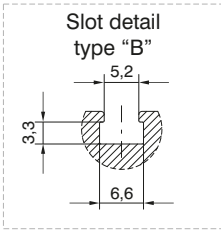

Sensor with cable and M8 connector

Weight g 15

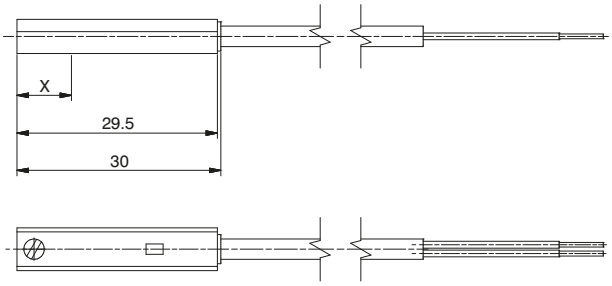

Ordering code

Ampulla Reed sensors, with led, Universal, N.O. (Normally open)

			X=point of commutation
1580.U		(2 wires) cable 2.5 mt.	15 mm
MRS.U		(2 wires) cable 300 mm, M8 connector (use MC1 or MC2 connectors)	15 mm
1580.UAP	PNP	(3 wires) cable 2.5 mt.	15 mm
MRS.UAP	PNP	(3 wires) cable 300 mm, M8 connector (use MCH1 or MCH2 connectors)	15 mm

Hall effect sensors, with led, DC, N.O. (Normally open)

			X=point of commutation
1580.HAP	PNP	(3 wires) cable 2.5 mt.	8 mm
1580.HAN	NPN	(3 wires) cable 2.5 mt.	8 mm
MHS.P	PNP	(3 wires) cable 300 mm, M8 connector (use MCH1 or MCH2 connectors)	8 mm

Diagrams and connections

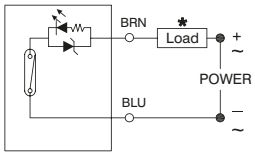

with Reed bulb (2 wires)

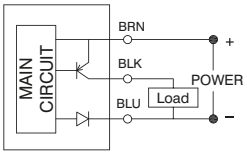

Hall-PNP effect (3 wires)

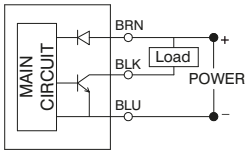

Hall-NPN effect (3 wires)

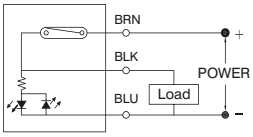

with Reed bulb (3 wires)

*** The load (LOAD) can be connected either to negative or positive pole**

Technical characteristics	1580.U	MRS.U	1580.UAP	MRS.UAP	1580.HAP	1580.HAN	MHS.P
Type of contact	N.O.						
Output type			PNP			NPN	PNP
Maximum current	100mA						
Maximum permanent power	14 VA - 10 W		4 VA - 3 W		3 W		
Voltage range	5 - 230V DC/AC	5 - 30V DC/AC	10 - 30 V DC/AC		10 - 30 V DC		
Working temperature	-10°C - +70°C						
Maximum voltage drop	3.5 V		0V **		2 V		
Cable section (mm²)	2 x 0.14 Ø3.3mm PUR	2 x 0.14 Ø3.3mm PUR	3 x 0.14 Ø3.3 mm PUR		3 x 0.14 Ø3.3 mm PUR		
Degree of protection	IP 67						

****Even if one sensor generates a voltage drop very close to 0 Volts, we suggest to connect no more than 30 sensors in series.**

Cable ordering code

MC1	cable 2 wires l=2.5m with M8 connector
MC2	cable 2 wires l=5m with M8 connector
MC3	cable 2 wires l=10m with M8 connector

Connection 2 wires

Connector

Sensor

1 Brown (+)
4 Blue (-)
3 Not use

MCH1	cable 3 wires l=2.5m with M8 connector
MCH2	cable 3 wires l=5m with M8 connector
MCH3	cable 3 wires l=10m with M8 connector

Connection 3 wires

Connector

Sensor

1 Brown (+)
4 Black (signal)
3 Blue (-)

Sensor with 2.5 m. cable

Weight g 23

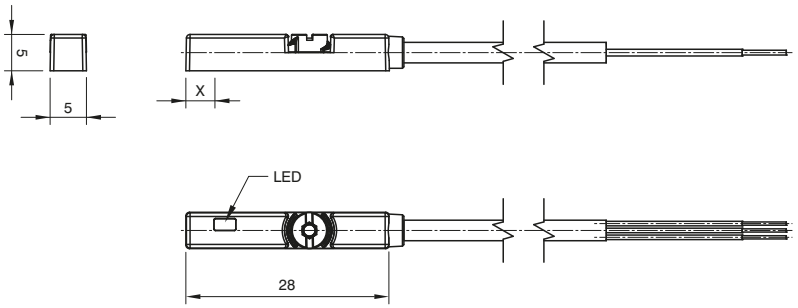

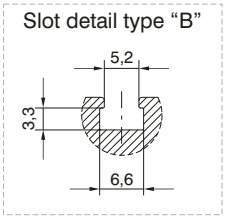

Ordering code

Hall effect sensors, with led, DC, N.O. (Normally open)		X= point of commutation
1595.HAP	PNP (3 wires) cable 2.5 mt.	2.3 mm

Diagrams and connections

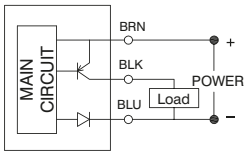

Hall-PNP effect (3 wires)

Technical characteristics	1595.HAP
Type of contact	N.O.
Output type	PNP
Maximum current	100 mA
Maximum permanent power	3W
Voltage range	10 - 28 VDC
Working temperature	-10 - +70°C
Maximum voltage drop	1,5V
Cable section (mm^2)	3 x 0,14 Ø2.8 mm PUR
Degree of protection	IP67

Overall dimensions and technical information are provided solely for informative purposes and may be modified without notice

Sensor with 2,5 m cable

Weight g 27

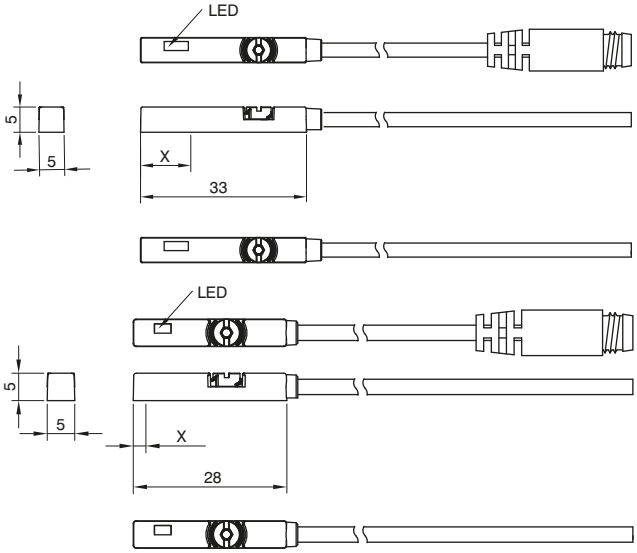

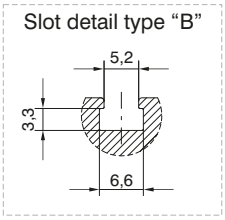

Sensor with cable and M8 connector

Weight g 15

Ordering code

Ampulla Reed sensors, with led, Universal, N.O. (Normally open)

		X=point of commutation
1590.U	(2 wires) cable 2.5 mt.	10 mm
LRS.U	(2 wires) cable 300 mm, M8 connector (use MC1 or MC2 connectors)	10 mm
1590.UAP	PNP (3 wires) cable 2.5 mt.	10 mm
LRS.UAP	PNP (3 wires) cable 300 mm, M8 connector (use MCH1 or MCH2 connectors)	10 mm

Hall effect sensors, with led, DC, N.O. (Normally open)

		X=point of commutation
1590.HAP	PNP (3 wires) cable 2.5 mt.	2,3 mm
LHS.P	PNP (3 wires) cable 300 mm, M8 connector (use MCH1 or MCH2 connectors)	2,3 mm

Diagrams and connections

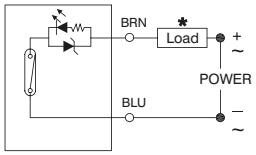

with Reed bulb (2 wires)

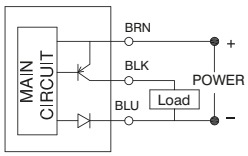

Hall-PNP effect (3 wires)

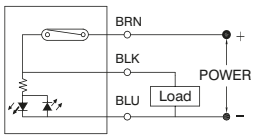

with Reed bulb (3 wires)

*** The load (LOAD) can be connected either to negative or positive pole**

Technical characteristics	1590.U	LRS.U	1590.UAP	LRS.UAP	1590.HAP	LHS.P
Type of contact	N.O.					
Maximum current	100mA		500mA		200mA	
Maximum permanent power	14 VA - 10 W		14 VA - 10 W		6 W	
Voltage range	5 - 30V DC/AC		10 - 30 V DC/AC		10 - 30 V DC	
Working temperature	-10°C - +70°C					
Maximum voltage drop	3 V		0V **		1.5 V	
Cable section (mm²)	2 x 0.14 Ø3 mm PUR		3 x 0.14 Ø3 mm PUR			
Degree of protection	IP 67					

****Even if one sensor generates a voltage drop very close to 0 Volts, we suggest to connect no more than 30 sensors in series.**

Cable ordering code

MC1	cable 2 wires l=2.5m with M8 connector
MC2	cable 2 wires l=5m with M8 connector
MC3	cable 2 wires l=10m with M8 connector
MCH1	cable 3 wires l=2.5m with M8 connector
MCH2	cable 3 wires l=5m with M8 connector
MCH3	cable 3 wires l=10m with M8 connector

Connection 2 wires

Connector

Sensor

1 Brown (+)
4 Blue (-)
3 Not use

Connection 3 wires

Connector

Sensor

1 Brown (+)
4 Black (signal)
3 Blue (-)

Sensor with 2.5 m. cable

Weight g 22

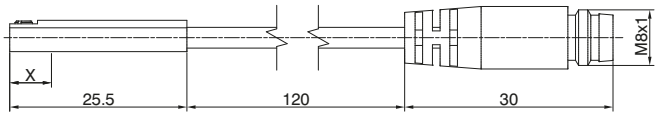

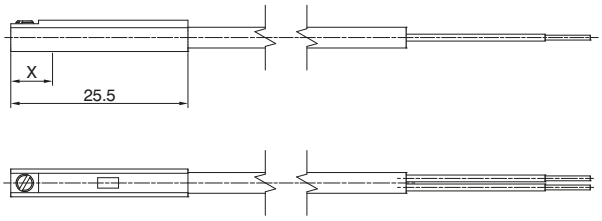

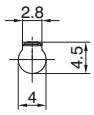

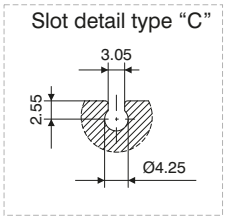

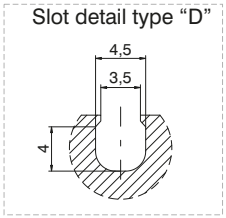

Sensor with cable and M8 connector

Weight g 10

Ordering code

Ampulla Reed sensors, with led, Universal, N.O. (Normally open)

		X=point of commutation
1581.U	(2 wires) cable 2.5 mt.	10 mm
TRS.U	(2 wires) cable 100 mm, M8 connector (use MC1 or MC2 connectors)	10 mm

Hall effect sensors, with led, DC, N.O. (Normally open)

		X=point of commutation
1581.HAP	PNP (3 wires) cable 2.5 mt.	7,5 mm
THS.P	PNP (3 wires) cable 100 mm, M8 connector (use MCH1 or MCH2 connectors)	7,5 mm

Diagrams and connections

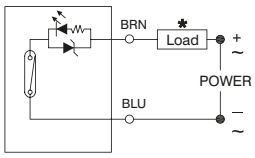

with Reed bulb (2 wires)

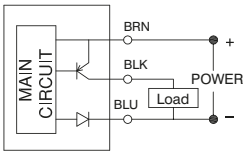

Hall-PNP effect (3 wires)

*** The load (LOAD) can be connected either to negative or positive pole**

Technical characteristics	1581.U	TRS.U	1581.HAP	THS.P
Type of contact	N.O.			
Maximum current	50mA			
Maximum permanent power	8 VA - 1,5 W		1,5 W	
Voltage range	5 - 30V DC/AC		10 - 30 V DC	
Working temperature	-10°C - +70°C			
Maximum voltage drop	3,5 V		1 V	
Cable section (mm²)	2 x 0,14 Ø2,8 mm PUR		3 x 0,14 Ø2,8 mm PUR	
Degree of protection	IP 67			

Cable ordering code

MC1	cable 2 wires l=2.5m with M8 connector
MC2	cable 2 wires l=5m with M8 connector
MC3	cable 2 wires l=10m with M8 connector

Connection 2 wires

Connector

Sensor

1 Brown (+)
4 Blue (-)
3 Not use

MCH1	cable 3 wires l=2.5m with M8 connector
MCH2	cable 3 wires l=5m with M8 connector
MCH3	cable 3 wires l=10m with M8 connector

Connection 3 wires

Connector

Sensor

1 Brown (+)
4 Black (signal)
3 Blue (-)

Overall dimensions and technical information are provided solely for informative purposes and may be modified without notice

Sensor with cable

Weight g 22

Sensor with cable and M8 connector

Weight g 10

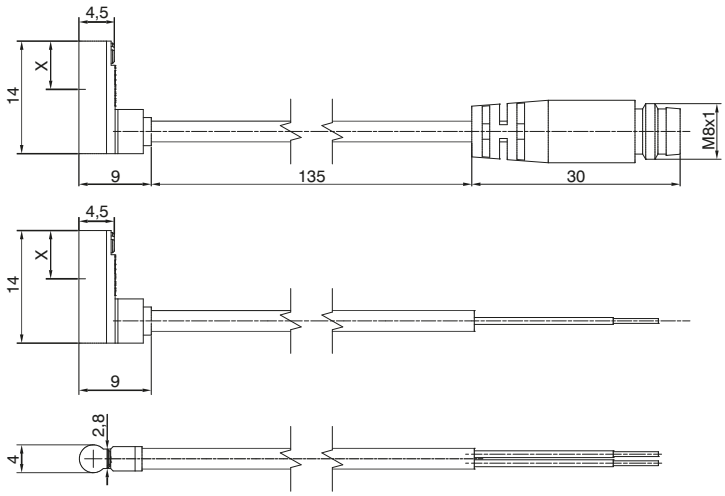

Slot detail type "C"

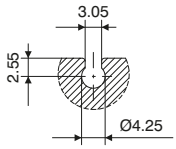

Slot detail type "D"

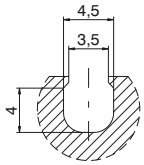

Ordering code

Ampulla Reed sensors, with led, DC, N.O. (Normally open)

		X=point of commutation
1583.DC	(2 wires) cable 2 mt.	6 mm

Hall effect sensors, with led, N.O. (Normally open)

		X=point of commutation
1583.HAP	PNP (3 wires) cable 3 mt.	6 mm
THR.P	PNP (3 wires) cable 100 mm, M8 connector (use MCH1 or MCH2 connectors)	6 mm

Diagrams and connections

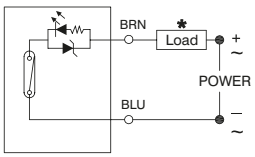

with Reed bulb (2 wires)

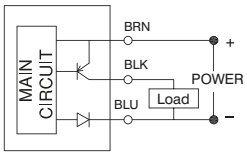

Hall-PNP effect (3 wires)

*** The load (LOAD) can be connected either to negative or positive pole**

TECHNICAL CHARACTERISTICS	1583.DC	1583.HAP	THR.P
Type of contact	N.O.		
Maximum current	20mA	50mA	
Maximum permanent power	0,6 W	1,5 W	
Voltage range	10 - 28V DC	4,5 - 28 V DC	
Working temperature	-10°C - +70°C		
Maximum voltage drop	3,5 V	0,5 V	
Cable	Ø2,6 mm PVC - 2 m	Ø2,6 mm PVC - 3 m	
Degree of protection	IP 67		

Cable ordering code

MCH1	cable 3 wires l=2.5m with M8 connector
MCH2	cable 3 wires l=5m with M8 connector

Connection 3 wires

Connector

Sensor

1 Brown (+)
4 Black (signal)
3 Blue (-)

Rectangular section version (for sensor slot type “B”)

SERIES	DESCRIPTION	MOUNTED
1200	Microbore with threaded end covers and “TECNO-MIR” microbore “MIR” with rolled end covers Microbore “MIR-INOX” with rolled end covers	with clamps code **1260.Ø.FS** with clamps code **1280.Ø.FS** with clamps code **1280.Ø.FSX**
1319 - 1320 1325 - 1345 1330 - 1332 1348 - 1349	for cylinders Ø32 - Ø40	with brackets code **1320.AS**
	for cylinders Ø50 ÷ Ø63	with brackets code **1320.BS**
	for cylinders Ø80 ÷ Ø100	with brackets code **1320.CS**
	for cylinders Ø125	with brackets code **1320.DSC**
	for cylinders Ø160	with brackets code **1320.ESC**
	for cylinders Ø200	with brackets code **1320.FSC**
1386-87 / 1396-97	Cylinders according to standard ISO 15552 ECOPLUS	directly on groove
1390 - 1391	Cylinders according to standard ISO 15552 ECOLIGHT **Warning:** To use only into the lateral slot, from Ø32 to Ø63 cylinders. (do not use into the 2 slots positioned on the side of feeding connection)	directly on groove
1370÷1373	Cylinders ECOFLAT	directly on groove
	Short stroke compact cylinders	with adapter code **1380.01F**
1500	Compact cylinders “Europe”	from Ø12 to Ø25: directly on groove
		from Ø32 to Ø50:directly on groove or with adapter **1380.01F**
		from Ø63 to Ø100: with adapter cod. **1380.01F**
	Compact cylinder according to standard ISO 21287 ECOMPACT	directly on groove
1605	Rodless cylinders	with adapter code **1600.B**
6100	Guided compact cylinder (Ø20 - Ø63)	directly on groove
6101	Heavy duty guided shortstroke cylinder	
6200	Twin rod slides units	
6210	Twin through rod slides units	
6301	Pneumatic grippers, angular standard version	
6303	180° angular gripper rack & pinion style	
6310	Parallel style pneumatic grippers standard version (Ø10 - Ø25)	
6311	Parallel style pneumatic grippers wide opening	
6312	3 finger parallel style pneumatic grippers (Ø32 - Ø125)	

Square section version (for sensor slot type “B”)

SERIES	DESCRIPTION	MOUNTED
1200	Microbore with threaded end covers and “TECNO-MIR” microbore “MIR” with rolled end covers Microbore “MIR-INOX” with rolled end covers	with clamps code **1260.Ø.FS** with clamps code **1280.Ø.FS** with clamps code **1280.Ø.FSX**
1319 - 1320 1325 - 1345 1330 - 1332 1348 - 1349	for cylinders Ø32 - Ø40	with brackets code 1320.ASC
	for cylinders Ø50 - Ø63	with brackets code 1320.BSC
	for cylinders Ø80 - Ø100	with brackets code 1320.CSC
	for cylinders Ø125	with brackets code 1320.DSC
	for cylinders Ø160	with brackets code 1320.ESC
	for cylinders Ø200	with brackets code 1320.FSC
1386-87 / 1396-97	Cylinders according to standard ISO 15552 ECOPLUS	directly on groove
1390 - 1391	Cylinders according to standard ISO 15552 ECOLIGHT	directly on groove
1370÷1373	Cylinders ECOFLAT	directly on groove
1500	Compact cylinders “Europe”	from Ø12 to Ø25: directly on groove
		from Ø32 to Ø50: directly on groove
	Compact cylinder according to standard ISO 21287 ECOMPACT	directly on groove
6100	Guided compact cyalinder (Ø20 - Ø63)	directly on groove
6101	Heavy duty guided shortstroke cylinder	
6200	Twin rod slides units	
6210	Twin through rod slides units	
6301	Pneumatic grippers, angular standard version	
6303	180° angular gripper rack & pinion style	
6310	Parallel style pneumatic grippers standard version (Ø10 - Ø25)	
6311	Parallel style pneumatic grippers wide opening	
6312	3 finger parallel style pneumatic grippers (Ø32 - Ø125)	
6411	Single rack rotary actuators	

Round section version (for sensor slot type “C” and “D”)

SERIES	DESCRIPTION	MOUNTED
6100	Guided compact cylinder (Ø12 - Ø16)	directly on groove
6302	Pneumatic grippers, 180 °angular	
6310	Parallel style pneumatic grippers standard version (Ø16 and Ø25)	
6312	3 finger parallel style pneumatic grippers (Ø16 - Ø25)	
6400	Double rack rotary actuators with turn table	
6420	Vane type rotary actuators (from Ø10 to Ø40)	
6500	Arbitrary mount cylinders	
6600	Slide cylinders	
6700	Guide cylinders	

Round section 90° cable version (for sensor slot type “C” and “D”)

SERIES	DESCRIPTION	MOUNTED
6420	Vane type rotary actuators	directly on groove

Overall dimensions and technical information are provided solely for informative purposes and may be modified without notice

Series 1260/1320 - Piston rod lock

General

The piston rod lock devices are clamping units mounted on the microbore cylinders front head. They allow the piston rod to lock in any position.
Piston rod clamping is mechanically obtained by springs actuated purpose-made jaws.
This method allows to lock the cylinder in the desired position, should the air pressure drop.
The piston rod lock device is not a safety device.

Construction characteristics

Mounting bracket	Anodised aluminium
Body	Anodised aluminium
Clamping jaws	Hardened alloy copper
Piston	Acetal resin
Seal	NBR
Springs	Springs steel

Operational characteristics

Fluid	Filtered air. No lubrication needed, if applied it shall be continuous.						
Working pressure	3 bar - 6 bar						
Working temperature	-5°C - +70°C						
Functioning	mechanical double jaws						
Locking	axial, two-direction (normally locked)						
Unlocking	pneumatic						
Clamping force with static load (microbore cylinders)	Ø12	Ø16	Ø20	Ø25	Ø32		
	180N	180N	350N	350N	600N		
Clamping force with static load (cylinders)	Ø32	Ø40	Ø50	Ø63	Ø80	Ø100	Ø125
	600N	1000N	1400N	2000N	5000N	5000N	7000N

"Attention: Dry air must be used for application below 0°C"

Use and maintenance

Operate within the specified technical characteristics.
The piston rod lock does not require maintenance if properly utilised.
The working inlet port has to be pressurised for assembling the piston rod lock device on cylinder. Alternatively adjust the jaws with screw located on connection.
Spare parts are not available.

Microbore cylinders for piston rod lock

Threaded end covers version

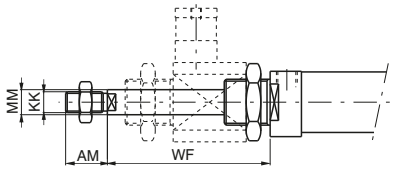

Ordering code
12_ _.Ø.stroke.B

Order piston rod lock separately. Do not use with stainless steel or hexagonal piston rod.

Cylinders for piston rod lock)

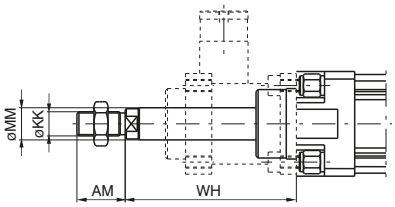

Order piston rod lock separately. Do not use with stainless steel piston rod.

Ordering code
13 – –.Ø.stroke.– –.B

Piston rod lock complete

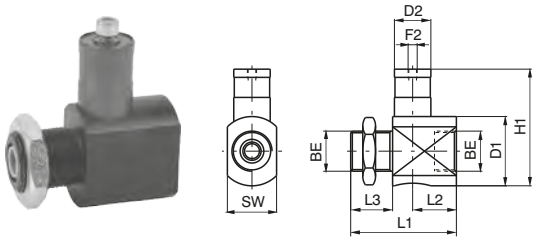

Do not use as safety device

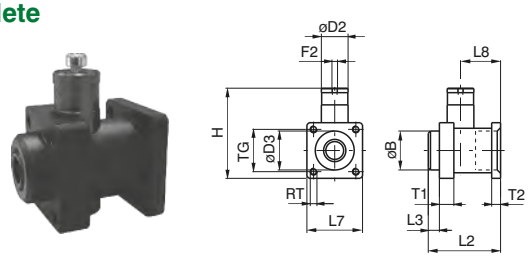

Ordering code	Ø	12	16	20	25	32
1260.Ø.51BS	Weight g	82	82	140	140	188

Ordering code	Ø	32	40	50	63	80	100	125
1320.Ø.51BS	Weight g	191	276	535	852	1772	2412	5250

Piston rod lock bracket

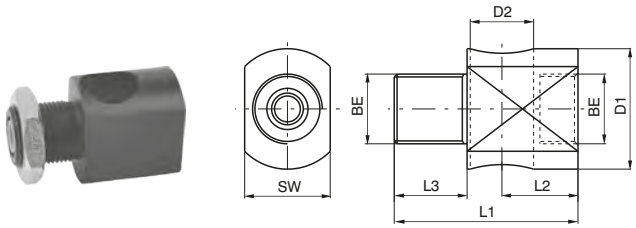

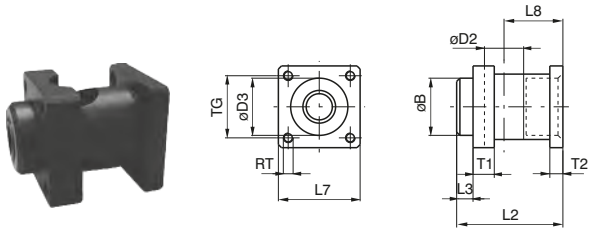

Ordering code	Ø	12	16	20	25	32
1260.Ø.51S	Weight g	60	60	85	85	133

Ordering code	Ø	32	40	50	63	80	100	125
1320.Ø.51S	Weight g	142	171	360	486	1060	1700	3500

Piston rod lock and housing

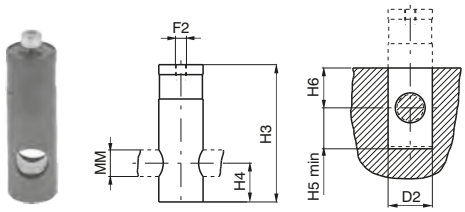

Do not use as safety device

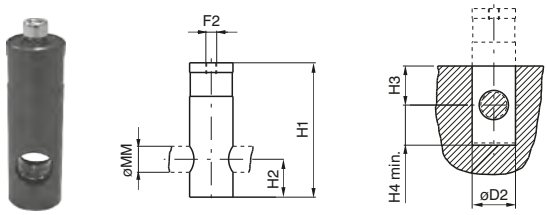

Ordering code	Ø	12	16	20	25	32
1260.Ø.51B (Ø12÷Ø25)	Weight g	22	22	55	55	55
1320.32.51B (Ø32)						

Ordering code	Ø	32	40	50	63	80	100	125
1320.Ø.51B	Weight g	49	105	175	366	712	712	1750

Table of dimensions (series 1200)

Bore	AM	BE	D1	D2	F2	H1	H3	H4	H5	H6	KK	L1	L2	L3	MM	SW	WF
12	16	M16x1,5	20	16	M5	35	35	10	11	10	M6x1	42	21	12	6	20	55
16	16	M16x1,5	20	16	M5	35	35	10	11	10	M6x1	42	21	12	6	20	55
20	20	M22x1,5	38	20	M5	64	62	17,5	19	18	M8x1,25	58	24	23	8	27	73
25	22	M22x1,5	38	20	M5	64	62	17,5	19	18	M10x1,25	58	24	23	10	27	77
32	20	M30x1,5	39,5	20	M5	64	62	17,5	18,5	18	M10x1,25	60	26	22	12	35	76,5

Table of dimensions (series 1300)

Bore	AM	B	D2	D3	F2	H	H1	H2	H3	H4	KK	L2	L3	L7	L8	MM	RT	T1	T2	TG	WH
32	22	30	20	30,5	M5	67	62	17,5	18	18,5	M10x1,25	58	10	45	31,5	12	M6	13	8	32,5	74
40	24	35	24	35	G 1/8”	86	83	22	22	23	M12x1,25	65	10	50	36	16	M6	13	8	38	85
50	32	40	30	40	G 1/8”	105	100	25	25	26	M16x1,5	82	12	60	45,5	20	M8	16	15	46,5	107
63	32	45	38	45	G 1/8”	121	116	30	30	31	M16x1,5	82	12	70	49,5	20	M8	16	15	56,5	107
80	40	45	48	45	G 1/8”	164	155	36	36	37	M20x1,5	110	20	90	61	25	M10	20	18	72	126
100	40	55	48	55	G 1/8”	172	155	36	36	37	M20x1,5	115	23	105	65	25	M10	20	18	89	143
125	54	60	65	60	G 1/8”	210	195	56	55	56	M27x2	167	45	140	86,5	32	M12	30	22	110	187

Overall dimensions and technical information are provided solely for informative purposes and may be modified without notice

Series 1260 - 1320 - Linear control units

Construction characteristics

Body	extruded shape anodized aluminium alloy 6060
Bushings	sintered bronze
Wiper	oil resitant NBR rubber
Rods	chromed C43 steel
Plate	plated zinc steel
Mounting block	plated zinc steel

Technical characteristics

Max. suggested strokes for 1200 series:

Diameter	20	25
Stroke mm	200	250

Max. suggested strokes for 1320 series:

Diameter	32	40	50	63	80
Stroke mm	300	350	450	500	550

On request are available strokes up to 2800 mm

Loading diagram based on dimension "**A**"

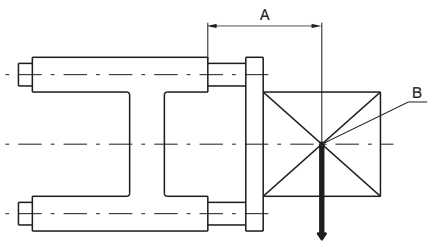

A = Protusion
B = Load centre of gravity

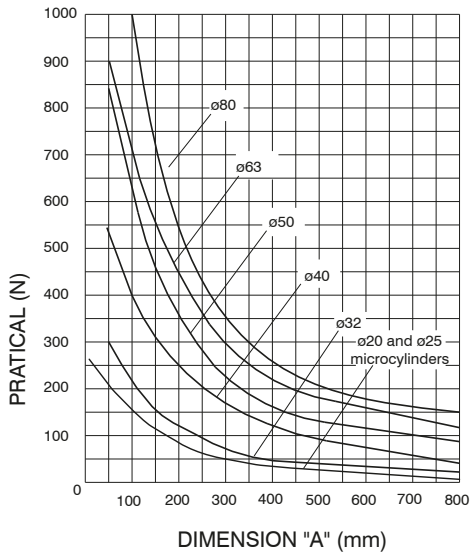

Use and maintenance

Follow the indication of the above diagram as far as loads are concerned. A large quantity of grease is placed between the two wipers during assembly, therefore the linear control units should not require special maintenance.

Dimensions for microbore cylinders ISO 6432

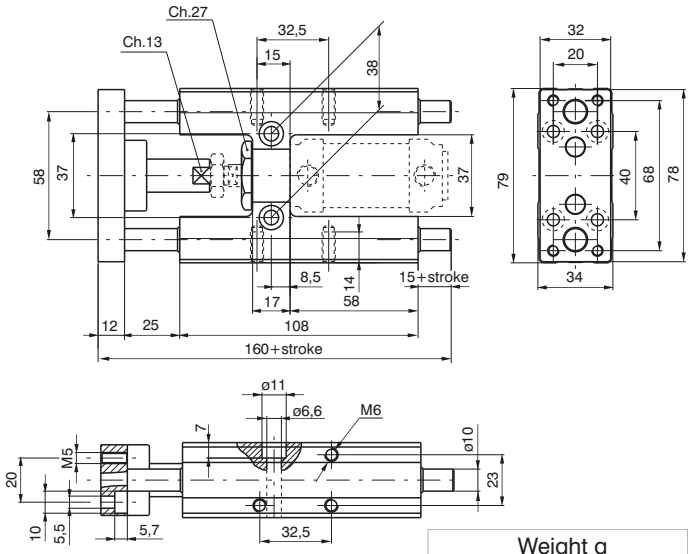

Ordering code
1260.Ø.stroke.GLB (Microbore cylinders ISO 6432 must be ordered separately)

Weight g	
stroke 100	every 50 mm
970	60

Standard strokes
ø 20 100 - 150 - 200 mm
ø 25 100 - 150 - 200 - 250 mm

Sensors and sensor clamps: Use standard sensors and clamps.

Dimensions for microbore cylinders ISO 15552

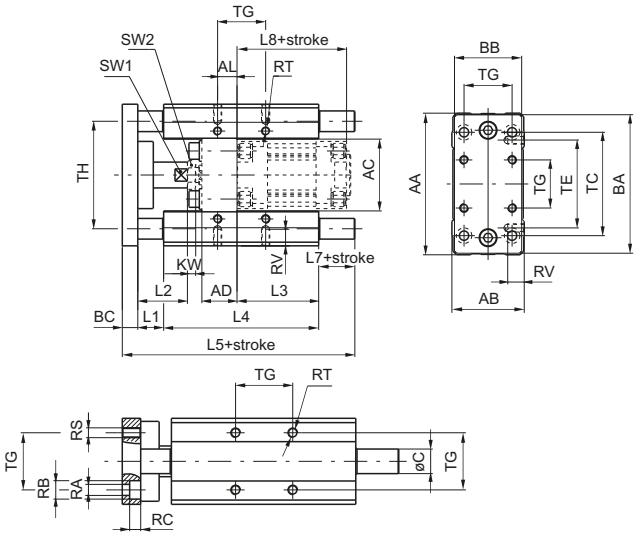

Ordering code
1320.Ø.stroke.GLB (Cylinders must be ordered separately)

	Bore	Ø32	Ø40	Ø50	Ø63	Ø80
Weight g	stroke 100	1720	2900	4700	6000	11300
	every 50 mm	91	159	159	250	380

Bore	AA	AB	AC	AD	AL	BA	BB	BC	C	KW	L1	L2	L3	L4	L5
32	97	49	50	24	4.3	93	45	12	12	6	25	39	76	125	187
40	115	58	57.5	28	11	112	55	12	16	7	25	44	81	140	207
50	137	70	69.5	34	18.8	134	65	15	20	8	25	48	79	150	225
63	152	85	84.5	34	15.3	149	80	15	20	8	25	48	111	182	242
80	189	105	106	34	21	180	100	20	25	9	25	53	128	215	302

Bore	L7	L8	RA	RB	RC	RS	RT	RV	SW1	SW2	TC	TE	TG	TH
32	25	94	6.6	11	6.5	M6	M6	12	15	17	78	61	32.5	74
40	30	105	6.6	11	6.5	M6	M6	14	15	19	84	69	38	87
50	35	106	9	15	9	M8	M8	16	22	24	100	85	46.5	104
63	20	121	9	15	9	M8	M8	16	22	24	105	100	56.5	119
80	42	128	11	18	11	M10	M10	20	27	24	130	130	72	148

Standard strokes
Ø 32 100 - 150 - 200 - 250 - 300 mm
Ø 40 100 - 150 - 200 - 250 - 300 - 350 mm
Ø 50 100 - 150 - 200 - 250 - 300 - 350 - 400 - 450 mm
Ø 63 100 - 150 - 200 - 250 - 300 - 350 - 400 - 450 - 500 mm
Ø 80 100 - 150 - 200 - 250 - 300 - 350 - 400 - 450 - 500 - 550 mm

Sensor clamps and brackets for 1319-1320 series
Use standard sensors and brackets on the rear and following special brackets on front of cylinders for use sensors codes 1500._, RS._, HS._ which have the following ordering codes:

1320.AGL sensor bracket for cylinders Ø32 and Ø40
1320.BGL sensor bracket for cylinders Ø50 and Ø63
1320.CGL sensor bracket for cylinders Ø80

Overall dimensions and technical information are provided solely for informative purposes and may be modified without notice

Series 6900 - Dampers

Dampers

Ordering code

6900.__

- A = Thread M8x1
- B = Thread M10x1
- C = Thread M14x1.5
- D = Thread M20x1.5
- E = Thread M27x1.5

Operational characteristics

Code	Max. power (Nm)		Return force	Operating temperature	Weight
	For cicle	For hour			
6900.A	4	14400	2,5 - 6 N	-20°C - 80°C	10 gr.
6900.B	15	24000	3,6 - 8 N		20 gr.
6900.C	30	50000	13 - 23 N		50 gr.
6900.D	100	76500	12 - 23 N		140 gr.
6900.E	390	175500	14 - 31 N		340 gr.

Overall dimensions

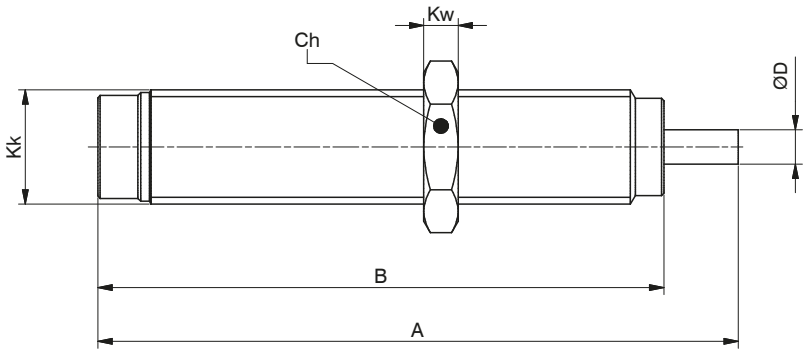

Table of dimensions

Code	A	B	Ch	D	Kk	Kw
6900.A	51	44	11	2,5	M8x1	3
6900.B	56	49,5	13	3	M10x1	3
6900.C	79	69	17	4	M14x1,5	5
6900.D	107	88	24	6	M20x1,5	6
6900.E	126,5	108,5	30	8	M27x1,5	8

Overall dimensions and technical information are provided solely for informative purposes and may be modified without notice

Appendix

Pneumatic symbols

Air treatment

Air treatment mechanisms

Pneumatic accumulator (capacity)	
Automatic drain air	
Automatic drain air	
Lubricator	
Air filter	
Filter - with manual drain	
Filter - with automatic drain	

Pressure control valves

Pressure switch	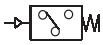
Free discharge pressure relief valve	
Free discharge pilot-operated pressure relief valve	
Sequence valve	
Pressure regulator	
Pressure regulator without exhaust valve	
Pilot-operated pressure regulator without exhaust valve	
Pressure regulator without exhaust valve (free)	
Differential pressure regulator	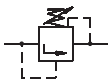

Assembled units

Filter pressure regulator	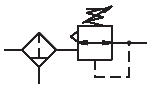
Filter pres. reg. + lubricator Filter + pres. reg. + lubricator	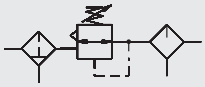

Other mechanisms

Pressure gauge	
Shut-off valve	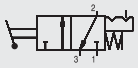
Progressive start-up valve With Electric control	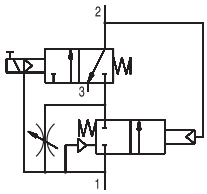
Progressive start-up valve With Pneumatic control	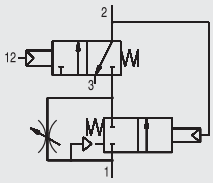

Overall dimensions and technical information are provided solely for informative purposes and may be modified without notice.

Valves and solenoid valves

Terms and descriptions

The connections to the inlet and out lets of the valves can be of two types:

Main connections	- supply connection identified with number 1
	- consumption connection identified with number 2 and 4
	- exhaust connection identified with number 3 and 5
Pilot connections	- repositioning connection on 2/2 & 3/2 ways valves identified with number 10
	- switching connection on 2/2 & 3/2 ways valves and repositioning connection on 5/2 & 5/3 ways valves identified with number 12
	- switching connection on 5/2 & 5/3 ways valve identified with number 14

Switching: is the process that changes the state of a valve from rest position to actuated position and is achieved by means of a mechanical, pneumatic or electric signal.
Repositioning: is the process that changes the valve state from actuated back to rest position and is achieved by means of an external mechanical (spring), pneumatic (differential) or electric signal.
Ways: indicated the number of connections on the valve body and on the pneumatic diagram.
Positions: indicates the number of positions achieved by the valve and corresponds to the number of squares on the pneumatic simple.
Function: indicates the valve working diagram at rest condition and corresponds to the right square in the pneumatic scheme.

Valves symbols

Way	Pos.	Function	Symbol
2	2	Normally closed	
2	2	Normally open	
3	2	Normally closed	
3	2	Normally open	
5	2	Separated exhaust connections	
5	3	Closed centres	
5	3	Open centres	
5	3	Pressured centres	

Complementary valves

Throttle valve	
Bidirectional flow regulator	
Unidirectional flow regulator	
Quick exhaust valve	
Shuttle valve	
Silencer	
Non-return valve without spring	
Non-return valve with spring	
Non-return valve controlled during closing	
Non-return valve controlled during opening	

Switching and Repositioning

Mechanical	
Plunger	
Sensitive plunger	
Roller	
Unidirectional roller	
Sensitive roller	
Pedal	
Pedal - spring return	
Push Button	
Sensitive push button	
Push button - two positions-	
Lever	
Lever - spring to center	
Sensitive lever	
Two position mechanical stop	
Three position mechanical stop	
Spring	
Pneumatics	
Pneumatic	
Pneumatic -return to center	
Pneumatic - depressurised	
Differential (pneumatic spring)	
Differential external pilot	
Sensitive differential	
Electrical	
Solenoid	
Bistable solenoid	
Solenoid (internal pilot)	
Solenoid (external pilot)	
Solenoid - spring to center	
Solenoid with suppl. pilot	

Valves and solenoid valves (following)

Piping and connections

Pressure line	
Control line	
Exhaust line	
Flexible line	
Electric line	
Piping connections	
Piping intersection	
Main air connection	

One-way rotating intake	
Three-way rotating intake	
Closed air intake	
Air intake with connection	
Quick coupling connection without non-return valve	
Quick coupling connection with non-return valve	
Air exhaust unthreaded connection	
Air exhaust threaded connection	

Cylinders

Single acting cylinders

With external return	
With spring return	
With spring return	

Double acting cylinders

Standard rod	
Double rod (through rod version)	
With non adjustable cushioning	
With adjustable cushioning	
With magnetic piston	
With magnetic piston with adjustable cushioning	

Tandem cylinders

In tandem, common rod	
In tandem, independant rods	
In tandem, opposite rods	
Opposed, common rod	

Non rotating cylinders

Standard rod / double acting	
Twin rod / double acting	
Twin rod / double acting through rod	
Twin through rod, double acting	
Guided compact cylinders	

Cylinders for piston rod lock

With magnetic piston with adjustable cushioning	
With non magnetic piston with adjustable cushioning	

Rodless cylinders

With magnetic piston With adjustable cushioning	
Cable cylinders with magnetic piston	
Cable cylinders with non magnetic piston	

Telescopic cylinders

Single acting	
Double acting	

Various cylinders

Rotating cylinders	
Rotating cylinder	
Bellows cylinder	

Pressure boosters

Air-Air intensifier	
Air-oil intensifier	
Hydropneumatic accumulator	

Overall dimensions and technical information are provided solely for informative purposes and may be modified without notice.

Dimensioning

Flow characteristics

Each cylinder requires, in order to generate specific forces and operate at the needed speed, specific air flow through the control valve. It is therefore necessary to know and understand the laws that regulate the flow through a valve; and therefore the relation between pressure, pressure drop and flow rate. Only by doing so is it possible to determine whether a valve is capable of supplying the required flow rate to a cylinder at a given inlet pressure and with a reasonable pressure drop.
In order to carry out these analyses it is necessary to work with precise functional data; it is not sufficient to know the valve port size. This data is presented in different ways depending on the different applicable, standards and various experimental measurments methods.
The figures are mainly coefficients which must be used in specific equations, with which we can estimate the valve flow rate. In order to understand the meaning of these equations it is necessary to examine the flow inside a pneumatic valve. For example, let us consider the following conditions: a valve supplied with an absolute pressure P1 and with a flow regulator connected downstream.

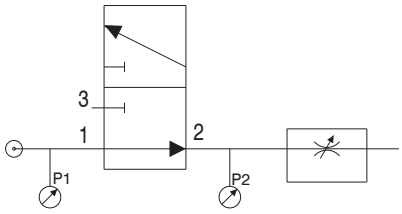

Starting condition - flow regulator closed
- no flow rate (Q=0)
- Upstream and downstream pressure are identical (P2=P1)

Intermediate conditions - opening flow regulator
By progressively opening the flow regulator the pressure P2 will decrease and the flow rate increase up to a critical point at which the flow rate becomes constant even if the flow regulator is opened further..
This critical point corresponds to the sonic condition of the flow.

Final condition - flow regulator completely open
- maximum flow rate (constant from critical point)
- downstream pressure P2=0

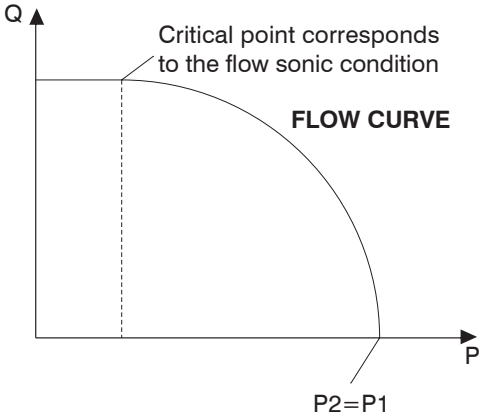

On a varying P1 the curves maintain the same form and only shift into a higher or lower flow rate area depending on whether P1 has increased or decreased. The area of interest in pneumatic valve applications is the subsonic zone, just before the critical flow point is reached.
This zone is expressed in a number of different ways which average the effective flow pattern enabling simple description of the flow using experimental coefficients.

Valve coefficients "C" e "B"

CETOP RP50P recommendation (derived from ISO 6358 standard) expresses flow rate in function of two experimental coefficients:
- conductance **C**
- critical pressure ratio **b**.

Conductance C = Q*/P1 is the ratio between maximum flow rate Q* and absolute inlet pressure P1 under sonic flow condition at a temperature of 20°C.
Critical ratio b = P*2/P1 is the ratio between the output absolute pressure P2 and the inlet absolute pressure P1 at which the flow becomes sonic.
The expression that represents an elliptic approximation of the relationship between pressure and flow follows:

$$Q_N = C \cdot P_1 \cdot K_t \cdot \quad 1-\left(\frac{r-b}{1-b}\right)^2 \qquad [1]$$

where:

Q_N (dm^3/s)	is the flow rate in dm /s at normal condition : 1,013 bar and 20°C;
C $\left(\frac{dm^3}{s \cdot bar}\right)$	is the valve conductance;
P1 (bar)	is the inlet absolute pressure;
r	is the ratio between downstream and upstream pressure (P2/P1);
b	is the pressures critical ratio;
$kt = \sqrt{293/T_1}$	is a corrective factor that consider the absolute inlet temperature T1;
$T1 = 273 + t_1$ (°K)	is the absolute temperature (t1 is the temperature in °C).

The experimental determination of the valve coefficient C & b is carried out with compressed air following standardised procedures and according to the scheme below.

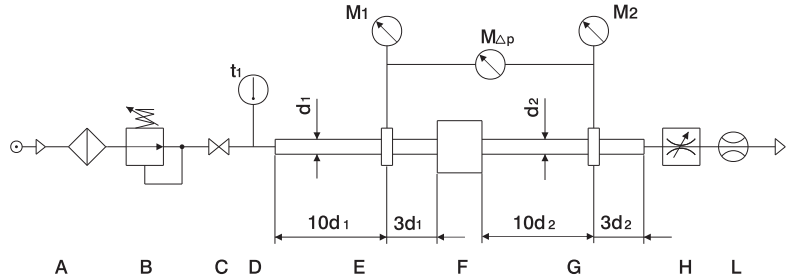

CETOP test circuit

A	Compressed air generator.
B	Pressure regulator to set upstream pressure P1.
C	Shut off valve.
D	Temperature sensor to check upstream temperature t 1, positioned in a low velocity area.
E	Pipe where the upstream pressure is measured.
F	Test valve.
G	Pipe where the downstream pressure is measured.
H	Flow regulator to adjust the downstream pressure P2.
L	Flow meter.
M1,M2	Pressure measuring equipment for upstream and downstream.
MΔP	Pressure drop measuring equipment assuming P1-P2< 1 bar.

Pipes E & G, used to measure the valve upstream and downstream pressure, must be sized according to the standard's specifications and change in size depending on the valve port sizes; the position of the connection at which the measurements are taken depends on the pipe's inner diameter.
Conductance C is determined with the following equation, measuring the critical flow rate Q* through the valve, where upstream pressure P1 is constant and greater than 3 bar.

$$C = \frac{Q^*}{P_1 \bullet K_t} \qquad [2]$$

Pressure critical ration **b** can be calculated using the following equation:

$$b = 1 - \frac{\Delta P}{P_1 \left[1 - \sqrt{1 - \left(\frac{Q'}{Q^*}\right)^2}\right]} \qquad [3]$$

Considering a given constant pressure P1 it is necessary to proceed measuring the flow rate Q' corresponding to a pressure drop DP = P1-P2 = 1 bar.
Equation 3 is used to calculate the critical ratio as it is difficult to experimentally identify the exact pressure P*2 at which the flow becomes sonic.
The values of both the conductance C and the critical ratio b are experimentally calculated and are the average of the results obtained.
Equation [1] is used to calculate the flow in subsonic conditions P2>b·P1 when values C ; b and the valve working conditions (P1, P2, T1) are known.
Under sonic conditions , P2£ b · P1 the equation can be simplified and the maximum flow rate can be calculated as follows:

$$\mathbf{Q^* = C \cdot P1 \cdot kt} \qquad [4]$$

HYDRAULIC COEFFICIENT KV

The hydraulic coefficient allows, using the equation. The calculation of the flow rate of a fluid through a valve.

$$Q = Kv \sqrt{\frac{\Delta p}{\varrho}} \quad \text{(l/min)} \qquad [5]$$

where:

Q	is the fluid flow rate in l/min
Δp	is the pressure drop inside the valve calculated in bar (P1 - P1)
ϱ	is the fluid density calculated in Kg/dm³
Kv	is the hydraulic coefficient calculated in $\frac{l}{min}\left(\frac{kg}{dm^3 \bullet bar}\right)^{1/2}$

Using these measurement units the flow rate coefficient Kv represents the flow rate (in liters) of water across the valve with a pressure drop of 1 bar.
The measurement are carried out using the standardised circuit below on which the connection ports are positioned according to the pipe inner bore size (norm VDE/VDI 2173).

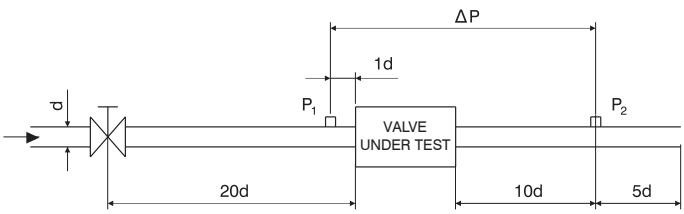

Overall dimensions and technical information are provided solely for informative purposes and may be modified without notice.

Hydraulic circuit

In some cases flow rate is measured in m /h which correspond a Kv measured

To obtain Kv expressed in $\frac{l}{min}\left(\frac{kg}{dm^3 \cdot bar}\right)^{1/2}$ it is sufficient to multiply the Kv value expressed in $\frac{m^3}{h}\left(\frac{kg}{dm^3 \cdot bar}\right)^{1/2}$ B y the co efficient 1 6,66.

The coefficient kv is perfectly suitable to express the flow rate of fluids but only gives approximate values in case of compressed air. Experiences gained in hydraulic environments can be inferred in the pneumatic field, bearing in mind the difference in density, and assuming that the air flow will generate the same pressure drops and flow reductions as water It is therefore possible to calculate reliable values for compressed air using flow coefficients Kv obtained from experiments with water.

To define the flow rate Qn through a valve at a given constant absolute inlet pressure P1, regardless of fluctuations of the downstream absolute pressure P2, refer to the equation below:

$$Q_N = 28{,}6 \cdot K_v \sqrt{P_2 \cdot \Delta P} \cdot \sqrt{\frac{T_n}{T_1}} \qquad [6]$$

where:

Q_n is the flow rate in volume l/min;

K_v is the hydraulic coefficient $\frac{l}{min}\left(\frac{kg}{dm^3 \cdot bar}\right)^{1/2}$

T_n is the absolute reference temperature;
T_1 is the inlet absolute temperature in °K;
P_2 is the downstream absolute pressure in bar;
ΔP is the pressure drop P_1 - P_2 in bar.

Equation [6] is real up to $\Delta P = \frac{P_1}{2}$ therefore $P_2 = \frac{P_1}{2}$

For lower P2 values the flow rate is considered to be constant, corresponding to the sonic flow rate Q*n given by the following equation:

$$Q^*_N = 14{,}3 \cdot K_v \cdot P_1 \sqrt{\frac{T_n}{T_1}} \qquad [7]$$

The nominal flow rate QNn

The nominal flow rate is the flow volume (at normal conditions) that passes through a valve with an upstream pressure P1=6bar (7 bar absolute pressure) and a pressure drop of 1 bar, corresponding to a downstream relative pressure P2 of 5bar (6 bar absolute pressure).

Normally the nominal flow rate is expressed in l/min and can be easily deduced from an experimental flow curve drawn for a upstream pressure of 6 bar (relative). Nominal flow rate can be useful for a preliminary assesment of the performances of different valves but in reality can be used only if the working conditions are the same as those mentioned before. In order to be able to compare valve charactersistics which are expressed in different coefficients it is possible to use conversion equations.

Given the C and b coefficient, it is possible to determine the nominal flow rate using the following equation:

$$Q_{Nn} = 420 \cdot C \cdot \sqrt{1-\left(\frac{0{,}857 - b}{1 - b}\right)^2} \qquad [8]$$

where:

Q_{Nn} = è in l/min e C in $\frac{dm^3}{s \cdot bar}$

The correlation between the hydraulic coefficient KV and the corresponding nominal flow rate is as follows:

where:

$Q_{Nn} = 66\,K_v$

Q_{Nn} è in l/min e KV in $\frac{l}{min}\left(\frac{kg}{dm^3 \cdot bar}\right)^{1/2}$

Conversion table

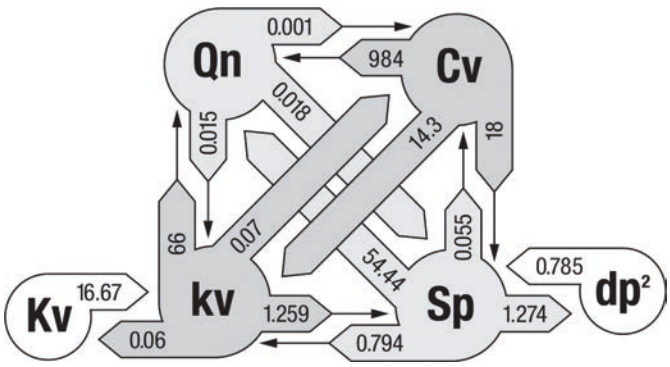

Qn	Nominal flow rate	Nl/min
kv	Hydraulic coefficient	l/min
Kv		m³ /hours
Cv		USA gallons/min
Sp	Nominal inner section area	mm²
dp²	Nominal diameter*	mm²

*to calculate the diameter dp (mm²) square root of dp²

Pipes flow resistence

The C factor (l/sec) indicates the pipe flow capacity and is the ratio between the maximum flow rate and absolute pressure (ISO 6358). The flow capacity progressively decreases with increasing pipe length, due to the air friction on the pipe inner surface increasing the pressure drop. Therefore the longer the pipe the smaller the flow rate. The chart below shows the flow rate characteristics of different pipe sizes (i/d and o/d) in function of the length.

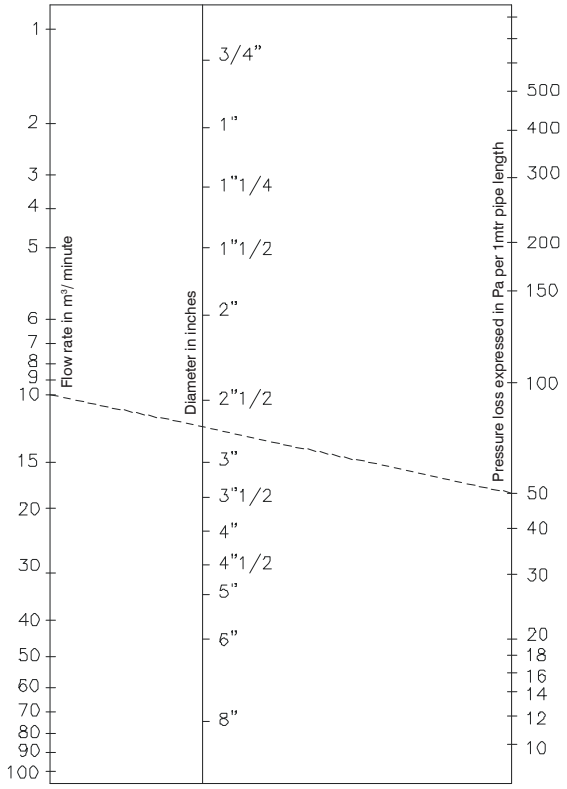

Valve sizing

The choice of the correct size valve is essential in order to ensure that the cylinder to be controlled will perform as expected. It is therefore necessary to know the cycle time to be achieved and to calculate the coefficient T which will be used as multiplier for the air consumption value previously calculated. The result of this equation, expressed in Nl/min and multiplied by a safety factor of 1.2, corresponds to the minimum flow rate needed (at standard conditions 6 bar supply and 5 bar on the consumption connection) to operate the cylinder at the required rate.

$$T = \frac{60\ Qn}{\text{cycle time}} = T \times \text{Consumption}$$

It is also imortant to ensure that the pipes used to connect the valve to the air supply and to the cylinder do not affect the flow rate in any way. The pipe inner bore must therefore be at least 1.5 times the diameter of the valve nominal orifice size. The choice of the fittings is also very important, the inner bore must be equal or greater than the pipe I/D. The diagram below shows the flow rate required to operate different size cylinders atvarying speeds and also the valve connection sizes.

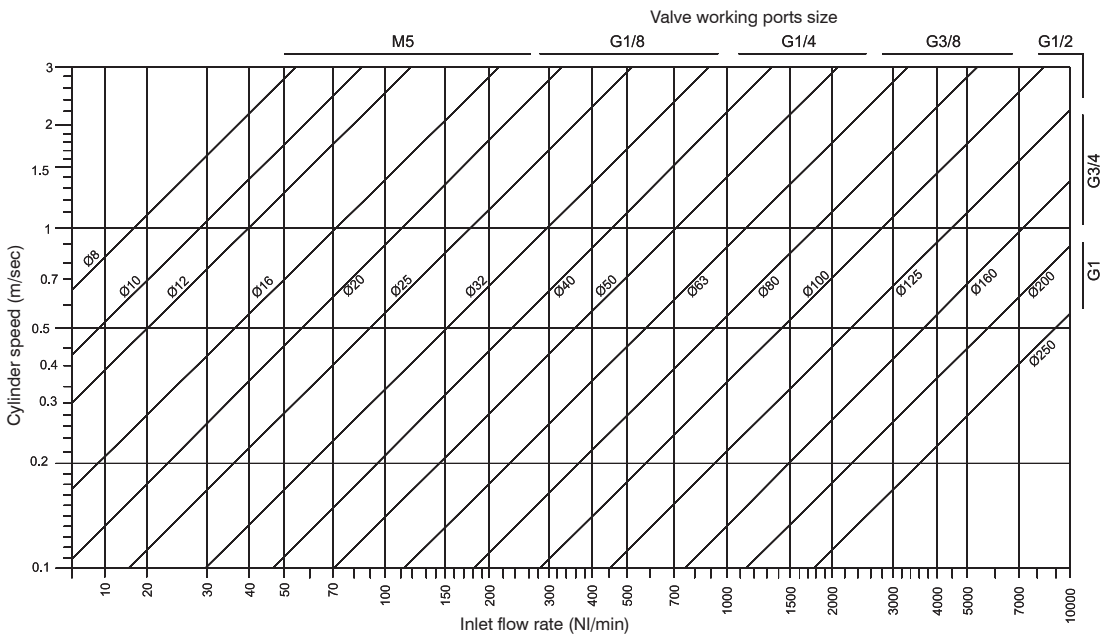

Overall dimensions and technical information are provided solely for informative purposes and may be modified without notice.

Cylinder air consumption

The air consumption corresponds to the volume of air that the cylinder uses in a complete cycle (stroke out and back in) at a specific pressure.

Consumption = Pa x C x (A+b)

Pa= Absolute pressure (bar)
C= Cylinder stroke (dm)
A= see tab. 1 (dm^2)
b= see tab. 2 (dm^2)

Air consumption is measured in Normal-liters (Nl) which correspond to the volume that a specific quantity (mass) of gas would fill at atmospheric pressure.

Calculation example:
ISO 15552 cylinder - 1319 series:
Supply pressure 6 bar (Pa=7 bar)
stroke 50mm (C=0,5 dm)
Ø63 (A=0,31157 dm)
Rod Ø=20 mm (b=0,28017 dm)

Consumption = 7 (bar) x 0,5 (dm) x (0,31157+0,28017) = **2,072 Nl**
(In order to calculate the air consumption for a specific number of cycles it is sufficient to multiply the above value for the number of cycles)

Piston surface area	
Ø cylinder	**A**
Ø 8	0,00502 dm^2
Ø 10	0,00785 dm^2
Ø 12	0,01130 dm^2
Ø 16	0,02010 dm^2
Ø 20	0,03140 dm^2
Ø 25	0,04906 dm^2
Ø 32	0,08038 dm^2
Ø 40	0,12560 dm^2
Ø 50	0,19625 dm^2
Ø 63	0,31157 dm^2
Ø 80	0,50240 dm^2
Ø 100	0,78500 dm^2
Ø 125	1,22656 dm^2
Ø 160	2,00960 dm^2
Ø 200	3,14000 dm^2

tab.1

Surface difference cylinder piston / rod Ø	
Ø cylinder - Ø rod	**A**
Ø 8 - Ø 4	0,00377 dm^2
Ø 10 - Ø 4	0,00659 dm^2
Ø 12 - Ø 6	0,00848 dm^2
Ø 16 - Ø 6	0,01727 dm^2
Ø 20 - Ø 8	0,02638 dm^2
Ø 25 - Ø 10	0,04121 dm^2
Ø 32 - Ø 12	0,06908 dm^2
Ø 40 - Ø 14	0,11021 dm^2
Ø 40 - Ø 16	0,10550 dm^2
Ø 40 - Ø 18	0,10017 dm^2
Ø 50 - Ø 14	0,18086 dm^2
Ø 50 - Ø 18	0,17082 dm^2
Ø 50 - Ø 20	0,16485 dm^2
Ø 63 - Ø 20	0,28017 dm^2
Ø 63 - Ø 22	0,27357 dm^2
Ø 80 - Ø 22	0,46441 dm^2
Ø 80 - Ø 25	0,45334 dm^2
Ø 100 - Ø 25	0,73594 dm^2
Ø 100 - Ø 30	0,71435 dm^2
Ø 125 - Ø 30	1,15591 dm^2
Ø 125 - Ø 32	1,14618 dm^2
Ø 160 - Ø 40	1,88400 dm^2
Ø 200 - Ø 40	3,01440 dm^2

tab.2

Allowed axial load (combined bending and compressing load)

This is the maximum load that can be applied axially on the rod tip. Above this value the rod might bend under compression. This value depends on a number of factors such as load size, rod diameter, the distance at which the load is applied (bending and compressing length L) and the conditions under which the load is applied (cylinder mountings). Among the possible conditions, the following three are the most common.

CASE 1
Fixed cylinder and free load

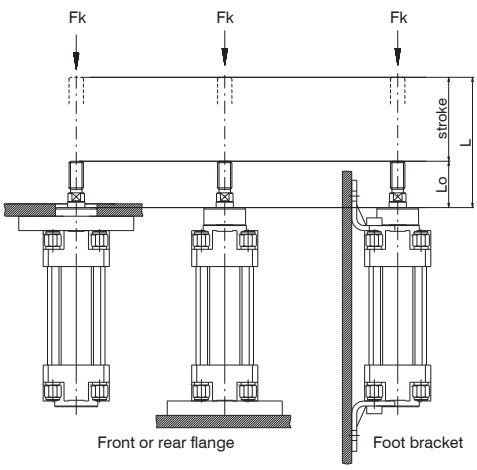

CASE 2
Cylinder fixed with pin and loosen load

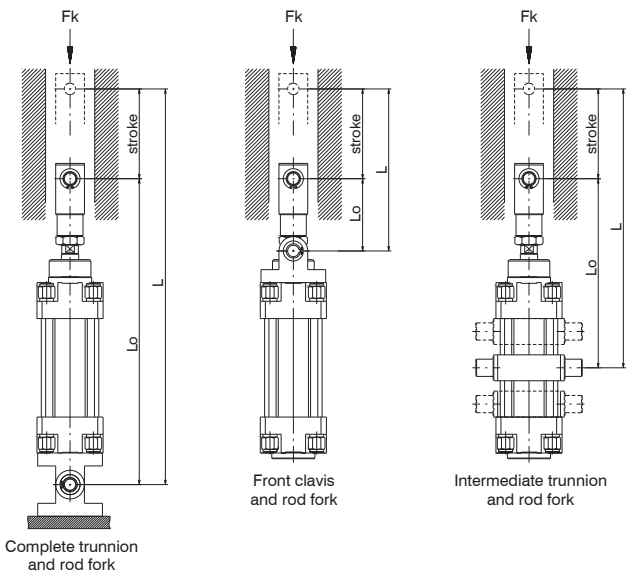

The maximum axial load can be calculated in two ways:
In an empirical way (see equations) or by checking the following diagram which shows the worst possible conditions (case 1 & 2) For all other possible mountings alternatives the axial load will surely be higher.

$$Fk = \frac{p^3 \times E \times d^4}{64 \times L^2 \times C} \quad (N)$$

$$d = \sqrt[4]{\frac{Fk \times 64 \times L^2 \times C}{p^3 \times E}} \quad (cm)$$

$$L = \sqrt{\frac{p^3 \times E \times d^4}{Fk \times 64 \times C}} \quad (cm)$$

E = rod material coefficient of elasticity (N/cm²) (steel=2,1x10⁷ N/cm²)
d = rod diameter (cm)
L = bending and compression distance (cm)
C = safety factor (da 2,5 a 5)

Example: **Axial load verification**

Cylinder ø80 mm
Rod diameter ø20 mm
Stroke 600 mm
Mounting CASE 2 intermediate trunnion: L0=290 mm
Carico 2000 N
L (distance)= 29+60=89 cm
3 7 4 2 Fk= (p x 2,1 x 10 x 2) : (64 x 89 x 5) = 4104 N
(Above the 2000 N applied)

The same result can be obtained using the below diagram : following the bending and compression distance line relative to 900mm up to the intersection with the 20mm Ø line we obtain 4000N.

Example: **Rod diameter sizing**

Considering the same conditions as in the above case we need to determinate the rod diameter suitable to withstand a 4000N load

$$d = \sqrt{(4000 \times 64 \times 89^2 \times 5) / (p^3 \times 2{,}1 \times 10^7)} = 2 \text{ cm}$$

The diameter to choose is the next one up : Ø25 mm

Also this second example can be resolved using the below diagram: following the bending and compression distance line relative to 900mm up to the intersection with the 4000N maximum load we obtain Ø20 mm.

With the third equation or using the diagram it is possible to calculate the bending and compression distance.

Overall dimensions and technical information are provided solely for informative purposes and may be modified without notice.

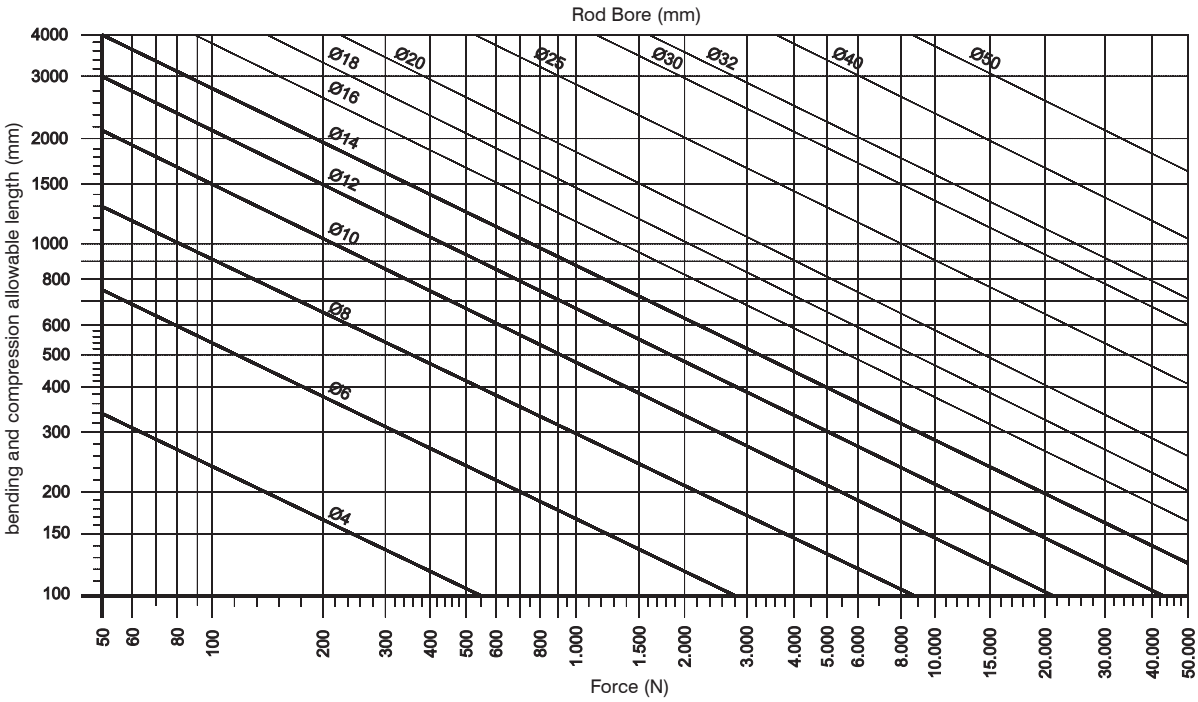

End of stroke cushioning capability

The function of the end of stroke cushioning is to reduce the kinetic energy generated by movement of the load and to prevent high speed impact between the piston and end caps that could compromise the unit functionality. The use of non-cushioned cylinders is not recomended on high speed applications unless external means of deceleration (such as dampers) are used.

The maximum load that can be cushioned depends on the speed of the unit and the cylinder cushioning capacity. The chartbelow shows the values relative to the ISO 15552 series cylinders considering the out stroke movement and a supply pressure of 6 bar. The acceptable values for any diameter are those found below each size line.

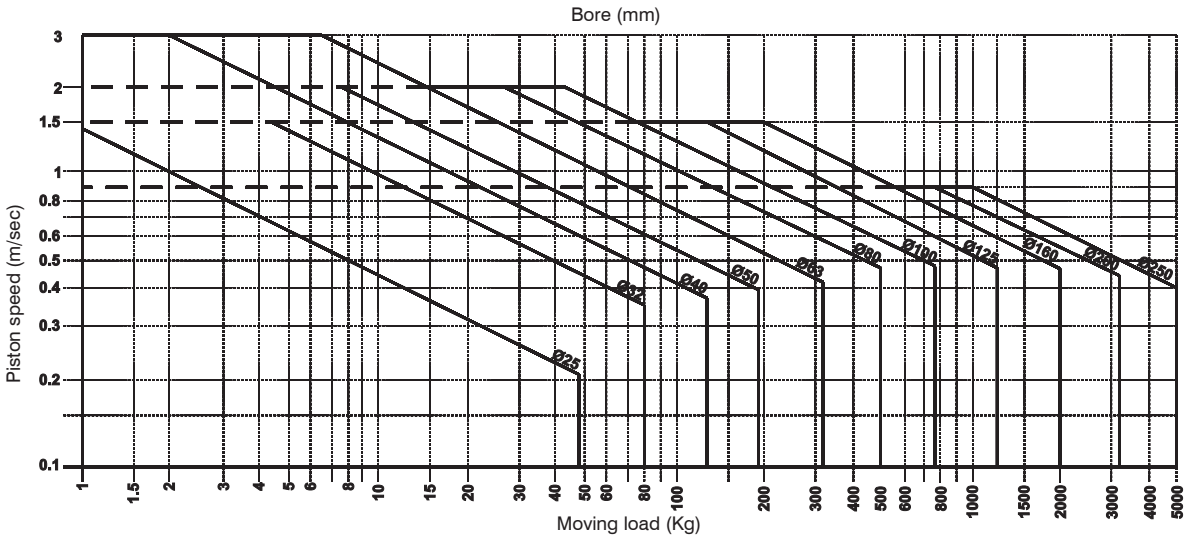

Cylinder sizing

In order to properly size a cylinder it is necessary to consider the following parameters:

Force generated: calculated in function of the piston area and of the pressure that acts upon it.

F= area x pressure (daN) = (cm) x (bar)

The value is theoretical and needs to be reduced by approximately 10-15% in order to compensate for the effects of friction. We must also consider that the force generated during the return stroke (traction) is lower, as the area on which the pressure acts is reduced by the presence of the rod.

Weight of the load: the force generated by the cylinder must be sufficient to move the load in the desired direction within the specified time (cycle time). The load ratio (RdC) must not exceed 70%.

$$\frac{\text{Needed force (load weight)}}{\text{Available force (generated)}} \times 100 = \text{RdC}$$

Load position

Vertical lift (pull upwards): the real force generated by the cylinder must be sufficient to counterbalance the load and to accelerate it.

Example:
Weight to be lifted 120Kg
Working pressure 6 bar
Load ratio 70%
Using the load ratio equation it is possible to calculate the force needed to lift the load:

$$\text{Available force} = \frac{\text{Load}}{\text{Rdc}} \times 100 \quad \text{the result is 171,4 daN}$$

A 63 bore cylinder which generates a theoretical force of 187 daN is suitable for the application.
A similar load ratio allows, using unidirectional flow regulators, good speed control.

When the speed is below 20mm/sec. It is difficult to properly control the movement.
The load ratio must be reduced to 50% on slow speed applications. In these conditions, or where constant movement is required, the use of a hydraulic speed control unit is recommended. On applications were the load is moving downwards, thereby increasing the force generated by the actuator, it is usually necessary to use flow regulators.

Horizontal or inclined movement: If the load is supported and the working position is horizontal, it is necessary to multiply the needed force by the coefficient of friction.

The coefficient of friction m varies according to the material.
For example considering m= 0.4
Weight to be moved 120Kg
Pressure 6 bar
Load ratio 70%
Solving the load ratio equation it is possible to calculate the available force:

$$\text{Available force} = \frac{\text{Load}}{\text{Rdc}} \times 100 \quad \text{which, in the above conditions is 68,57 daN}$$

A Ø40 bore cylinder that generates a theoretical force of 75.4 daN is suitable for the application.
In cases of inclined application the required force increases according to the angle.
Also in these conditions it is necessary to multiply the needed force by a coefficient of friction.

A

APPENDIX

THEORETICAL FORCE -PUSH- (N)
- rod moving out

Bore (mm)	Push area (mm²)	Feeding pressure (bar)									
		1	2	3	4	5	6	7	8	9	10
Ø 6	28	2,5	5,5	8	11	13,5	16,5	19	22	24,5	27,5
Ø 8	50	4,5	9,5	14,5	19,5	24,5	29,5	34	39	44	49
Ø 10	79	7,5	15	23	30,5	38	46	53,5	61,5	69	76,5
Ø 12	113	11	22	33	44	55	66	77	88	99	110
Ø 16	201	19	39	59	78	98	118	137	157	177	197
Ø 20	314	30	61	92	123	153	184	215	246	277	307
Ø 25	491	48	96	144	192	240	288	336	384	433	481
Ø 32	804	78	157	236	315	394	472	551	630	709	788
Ø 40	1.256	123	246	369	492	615	739	862	985	1.108	1.231
Ø 50	1.963	192	384	577	769	962	1.154	1.347	1.539	1.732	1.924
Ø 63	3.116	305	611	916	1.222	1,527	1.833	2.138	2.444	2.749	3.055
Ø 80	5.024	492	985	1.478	1.970	2,463	2.956	3.448	3.941	4.434	4.926
Ø 100	7.850	769	1.539	2.309	3.079	3,849	4.618	5.388	6.158	6.928	7.698
Ø 125	12.266	1.202	2.405	3.608	4.811	6,014	7.217	8.419	9.622	10.825	12.028
Ø 160	20.096	1.970	3.941	5.912	7.882	9.853	11.824	13.795	15.765	17.736	19.707
Ø 200	31.400	3.079	6.158	9.237	12.317	15.396	18.475	21.555	24.634	27.713	30.792
Ø 250	49.063	4.811	9.622	14.434	19.245	24.056	28.868	33.679	38.491	43.302	48.113

Surface difference
- Cylinder piston / rod Ø

Ø cylinder - Ø rod	b
Ø 8 - Ø 4	0,377 cm²
Ø 10 - Ø 4	0,659 cm²
Ø 12 - Ø 6	0,848 cm²
Ø 16 - Ø 6	1,727 cm²
Ø 20 - Ø 8	2,638 cm²
Ø 25 - Ø 10	4,121 cm²
Ø 32 - Ø 12	6,908 cm²
Ø 40 - Ø 14	11,021 cm²
Ø 40 - Ø 16	10,550 cm²
Ø 40 - Ø 18	10,017 cm²
Ø 50 - Ø 14	18,086 cm²
Ø 50 - Ø 18	17,082 cm²
Ø 50 - Ø 20	16,485 cm²
Ø 63 - Ø 20	28,017 cm²
Ø 63 - Ø 22	27,357 cm²
Ø 80 - Ø 22	46,441 cm²
Ø 80 - Ø 25	45,334 cm²
Ø 100 - Ø 25	73,594 cm²
Ø 100 - Ø 30	71,435 cm²
Ø 125 - Ø 30	115,591 cm²
Ø 125 - Ø 32	114,618 cm²
Ø 160 - Ø 40	188,400 cm²
Ø 200 - Ø 40	301,440 cm²

tab.2

Overall dimensions and technical information are provided solely for informative purposes and may be modified without notice.

Single acting cylinder spring initial and final load characteristics

Microbore cylinders ISO 6431 - 1260 series			Bore						
	Front spring	Rear spring	Ø 12	Ø 16	Ø 20	Ø 25	Ø 32	Ø 40	Ø 50
Initial load (N) external spring			9,9	10,8	10,8	7,9	19,7	39,3	39,3
Final load (N) compressed load	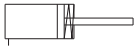		26,5	22,6	22,6	49,1	53,0	106,0	106,0

(stroke 0-40 mm)

Microbore cylinders ISO 6431 - 1280 series "MIR"			Bore						
	Front spring	Rear spring	Ø 8	Ø 10	Ø 12	Ø 16	Ø 20	Ø 25	Ø 32
Initial load (N) external spring			2,2	2,2	4,0	7,5	11,0	16,5	23,0
Final load (N) compressed load	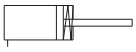		4,2	4,2	8,7	21,0	22,0	30,7	30,7

(stroke 0-50 mm)

Cylinders ISO 15552 - 1319-20-21 series			Bore					
	Front spring	Rear spring	Ø 32	Ø 40	Ø 50	Ø 63	Ø 80	Ø 100
Initial load (N) external spring			17,2	24,6	51,0	51,0	98,1	98,1
Final load (N) compressed load	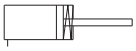		41,7	83,4	114,8	114,8	194,2	194,2

(stroke 0-50 mm)

Short stroke compact cylinders			Bore							
	Front spring	Rear spring	Ø 20	Ø 25	Ø 32	Ø 40	Ø 50	Ø 63	Ø 80	Ø 100
Initial load (N) external spring			7,9	9,9	34,4	34,4	50,1	54,0	117,7	108,9
Final load (N) compressed load	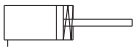		27,5	26,5	59,9	63,8	79,5	85,4	157,0	134,4

(stroke 0-10 mm)

"Europe" Compact cylinders			Bore									
	Front spring	Rear spring	Ø 12	Ø 16	Ø 20	Ø 25	Ø 32	Ø 40	Ø 50	Ø 63	Ø 80	Ø 100
Initial load (N) external spring			3,9	4,4	4,9	9,8	12,3	16,7	27,5	37,3	59,4	101,3
Final load (N) compressed load	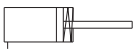		9,3	17,7	18,1	25,5	34,3	44,1	51,0	63,8	99,4	141,9

(Ø12 stroke 0-10 mm - Ø16¸100 stroke 0-25 mm)

Cylinder nuts recommended tightening torque	
Bore size	Torque (Nm)
Ø 32	8
Ø 40	8
Ø 50	16
Ø 63	16
Ø 80	22
Ø 100	22
Ø 125	30
Ø 160	85
Ø 200	85

Measure and conversion units

International system of units - table

Size	Name	Symbol
Lenght	Meter	m
Area	square meter	m^2
Volume	cubic meter	m^3
Force	Newton	N
Mass	kilogram	Kg
Pressure	Pascal	Pa (N/m^2)
Work and Energy	Joulle	J (Nm)
Power	Watt	W (J/s)
Time	Second	s
Speed	meter / second	m/s
Acceleration	meter / second^2	m/s^2
Flow rate	meter / second^3	m^3/s
Temperature	Kelvin	°K
Frequency	Hertz	Hz (1/s)
Electric current	Ampere	A
Voltage	Volt	V (W/A)
Electrical resistance	Ohm	Ω (V/A)
Electric power	Volt Ampere	VA (VA)

Measure and conversion units

Lenght	Centimetre (cm)	Meter (m)	Inch (In)	Foot (ft)	Yard (yd)
1 Meter (m)	100	1	39,37	3,281	1,094
1 Inch (In)	2,54	$2,54x10^{-2}$	1	$8,33x10^{-2}$	0,028
1 Foot (ft)	30,48	0,3048	12	1	0,333
1 Yard (yd)	91,44	0,9144	36	3	1

Area	Square centimetre (cm^2)	Square meter (m^2)	Square inch (sq in)	Square foot (sq ft)	Square yard (sq yd)
1 Square centimetre (cm^2)	1	$1x10^{-4}$	0,155	$1,08x10^{-3}$	$1,2x10^{-4}$
1 Square meter (m^2)	$1x10^4$	1	1.550	10,764	1,2
1 Square inch (sq in)	6,452	$6,45x10^{-4}$	1	$6,95x10^{-3}$	$7,72x10^{-4}$
1 Square foot (sq ft)	929	$9,29x10^{-2}$	144	1	0,111
1 Square yard (sq yd)	8.361	0,8361	1.296	9	1

Volume	Litre ($l=dm^3$)	Cubic metre (m^3)	Cubic inch (cu in)	Cubic foot (cu ft)	Gallon (gal-USA)	Gallon (gal-GB)
1 Liter (l) = $1dm^3$	1	$1x10^{-3}$	61,02	$3,53x10^{-2}$	0,2642	0,22
1 Cubic meter (m^3)	1.000	1	$6,102x10^4$	35,31	264,2	220
1 Cubic inch (cu in)	$1,64x10^{-2}$	$1,64x10^{-5}$	1	$5,8x10^{-4}$	$4,33x10^{-3}$	$3,6x10^{-3}$
1 Cubic foot (cu ft)	28,317	$2,83x10^{-2}$	1.728	1	7,48	6,23
1 Gallon (gal -USA)	3,785	$3,79x10^{-3}$	231	0,1337	1	0,8327
1 Gallon (gal -GB)	4,546	$4,55x10^{-3}$	277,4	0,1605	1,2	1

Overall dimensions and technical information are provided solely for informative purposes and may be modified without notice.

Mass (Weight)	Kilogram (Kg)	Pound (lb)	Hundred-weight USA	Hundred-weight GB
1 Kilogram (Kg)	1	2,205	$1,102x10^{-3}$	$9,842x10^{-4}$
1 Pound (lb)	0,4536	1	$5x10^{-4}$	$4,464x10^{-4}$
1 Hundred-weight USA	907,2	2.000	1	0,8929
1 Hundred-weight GB	1.016	2.240	1,12	1

Force	Newton (N)	Kilopound (kgp)	Poundal (pdl)
1 Newton (N)	1	0,102	7,23
1 Kilopound (kgp)	9,807	1	70,93
1 Poundal (pdl)	0,1383	0,0141	1

Pressure	Pascal (Pa)	Bar (bar)	Poundal/ pollice² (psi)	Technical atmosphere (at=kg/cm²)	Atmosphere (atm)	Column of Mercury (mmHg = Torr)	Column of water (mH_2O)
1 Pascal (Pa)	1	$1x10^{-5}$	$1,45x10^{-4}$	$1,02x10^{-5}$	$9,87x10^{-6}$	$7,5x10^{-3}$	$1,02x10^{-4}$
1 Bar (bar)	$1x10^{5}$	1	14,50	1,02	0,9869	750	10,2
1 Poundal/pollice² (psi)	6.895	0,069	1	$7,03x10^{-2}$	0,06805	51,72	0,703
1 Technical atmosphere (at=kg/cm²)	$9,807x10^{4}$	0,9807	14,22	1	0,9678	735,6	10
1 Atmosphere (atm)	$1,013x10^{5}$	1,013	14,70	1,033	1	760	10,33
1 millimetre of mercury (mmHg = Torr)	133,32	$1,34x10^{-3}$	$1,934x10^{-2}$	$1,36x10^{-3}$	$1,316x10^{-3}$	1	$1,36x10^{-2}$
1 Metre of water (mH_2O)	9.810	$9,81x10^{-2}$	1,423	0,1	$9,682x10^{-2}$	73,6	1

Work and Energy	Kilocalorie (kcal)	Kilogrammetre (kgm)	Kilowatt (kWh)	Horse power/hr (Hph) non Metric	Joule (J)
1 Kilocalorie (kcal)	1	427	$1,163x10^{-3}$	$1,561x10^{-3}$	4.190
1 Kilogrammeter (kgm)	$2,34x10^{-3}$	1	$2,724x10^{-6}$	$3,653x10^{-6}$	9,806
1 Kilowatt-hour (kWh)	860	367.122	1	1,341	$3,6x10^{5}$
1 Horsepower/hour-non metric (hph)	641	273.761	0,7457	1	$2,685x10^{6}$
1 Joule (J)	$2,39x10^{-4}$	0,102	$2,78x10^{-7}$	$3,725x10^{-7}$	1

Temperature	Kelvin (K)	Celsius (°C)	Fahrenheit (°F)
Kelvin (K)	/	K-273 = °C	(K-273)x1,8 = °F
Celsius (°C)	°C+273 = K	/	(°Cx1,8)+32 = °F
Fahrenheit (°F)	273+[(°F-32):1,8] = K	(°F-32):1,8 = °C	/

ISO metric thread UNI 4535-64

Coarse ISO metric thread			
Thread	Pitch (mm)	Ø Drilling (mm)	Ø Drill (mm)
M 1,6	0,35	1,321	1,20
M 1,8	0,35	1,521	1,45
M 2	0,40	1,679	1,60
M 2,2	0,45	1,838	1,75
M 2,5	0,45	2,138	2,05
M 3	0,50	2,599	2,5
M 3,5	0,60	3,010	2,9
M 4	0,70	3,422	3,3
M 4,5	0,75	3,878	3,7
M 5	0,80	4,334	4,2
M 6	1	5,153	5
M 7	1	6,153	6
M 8	1,25	6,912	6,8
M 9	1,25	7,912	7,8
M 10	1,5	8,676	8,5
M 11	1,5	9,676	9,5
M 12	1,75	10,441	10,2
M 14	2	12,210	12
M 16	2	14,210	14
M 18	2,5	15,744	15,5
M 20	2,5	17,744	17,5
M 22	2,5	19,744	19,5
M 24	3	21,252	21
M 27	3	24,252	24
M 30	3,5	26,771	26,5
M 33	3,5	29,771	29,5
M 36	4	32,270	32
M 39	4	35,270	35
M 42	4,5	37,799	37,5
M 45	4,5	40,799	40,5
M 48	5	43,297	43
M 52	5	47,297	47
M 56	5,5	50,796	50,5
M 60	5,5	54,796	54,5
M 64	6	58,305	58
M 68	6	62,305	62

Fine ISO metric thread			
Thread	Pitch (mm)	Ø Drilling (mm)	Ø Drill (mm)
M 3	0,35	2,721	2,65
M 4	0,50	3,599	3,5
M 5	0,50	4,599	4,5
M 6	0,75	5,378	5,2
M 7	0,75	6,378	6,2
M 8	0,75	7,378	7,2
M 8	1	7,153	7
M 9	1	8,153	8
M 10	0,75	9,378	9,2
M 10	1	9,153	9
M 10	1,25	8,912	8,8
M 11	1	10,153	10
M 12	1	11,153	11
M 12	1,25	10,912	10,8
M 12	1,5	10,676	10,5
M 14	1	13,153	13
M 14	1,25	12,912	12,8
M 14	1,5	12,676	12,5
M 15	1	14,153	14
M 15	1,5	13,676	13,5
M 16	1	15,153	15
M 16	1,5	14,676	14,5
M 18	1	17,153	17
M 18	1,5	16,676	16,5
M 18	2	16,210	16
M 20	1	19,153	19
M 20	1,5	18,676	18,5
M 20	2	18,210	18
M 22	1	21,153	21
M 22	1,5	20,676	20,5
M 21	2	20,210	20
M 24	1	23,153	23
M 24	1,5	22,676	22,5
M 24	2	22,210	22
M 24	1	24,153	24
M 25	1,5	23,676	23,5
M 26	1,5	24,676	24,5
M 27	1,5	25,676	25,5
M 27	2	25,210	25
M 28	1,5	26,676	26,5
M 30	1,5	28,676	28,5
M 30	2	28,210	28
M 32	1,5	30,676	30,5
M 33	2	31,210	31
M 35	1,5	33,676	33,5
M 36	1,5	34,676	34,5
M 36	2	34,210	34
M 36	3	33,252	33
M 38	1,5	36,676	36,5
M 39	3	36,252	36
M 40	1,5	38,676	38,5
M 42	1,5	40,676	40,5
M 45	1,5	43,676	43,5
M 50	1,5	48,676	48,5

Overall dimensions and technical information are provided solely for informative purposes and may be modified without notice.

GAS thread

«G» UNI 338-66			
Thread	Ø External (mm)	Ø Drilling (mm)	Ø Drill point (mm)
G 1/8” - 28	9,73	8,68	8,70
G 1/4” - 19	13,16	11,62	11,75
G 3/8” - 19	16,66	15,12	15,25
G 1/2” - 14	20,95	18,86	19,00
G 5/8” - 14	22,91	20,82	21,00
G 3/4” - 14	26,44	24,35	24,50
G 7/8” - 14	30,20	28,11	28,25
G 1” - 11	33,25	30,59	30,50
G 1 1/8” - 11	37,90	35,24	35,50
G 1 1/4” - 11	41,91	39,25	39,50
G 1 3/8” - 11	44,32	41,66	41,50
G 1 1/2” - 11	47,80	45,14	45,00
G 1 5/8” - 11	51,32	48,67	48,50
G 1 3/4” - 11	53,75	51,08	51,00
G 2” - 11	59,61	56,95	57,00
G 2 1/4” - 11	65,71	63,05	63,00
G 2 1/2” - 11	75,18	72,52	72,50
G 2 3/4” - 11	81,53	78,87	79,00
G 3” - 11	87,88	85,22	85,50
G 3 1/4” - 11	93,98	91,32	91,50
G 3 1/2” - 11	100,33	97,67	97,50
G 3 3/4” - 11	106,68	104,02	104,00
G 4” - 11	113,03	110,37	110,50

«Gc» UNI 339-66			
Thread	Ø External (mm)	Ø Drilling (mm)	Ø Drill point (mm)
Gc 1/8” - 28	8,5	4,9	3,1
Gc 1/4” - 19	11,5	7,3	4,7
Gc 3/8” - 19	15,0	7,7	5,1
Gc 1/2” - 14	18,5	10,0	6,4
Gc 3/4” - 14	23,5	11,3	7,7
Gc 1” - 11	30,0	12,7	8,1
Gc 1 1/4” - 11	38,0	15,0	10,4
Gc 1 3/8” - 11	41,0	15,0	10,4
Gc 1 1/2” - 11	44,5	15,0	10,4
Gc 2” - 11	56,0	18,2	13,6
Gc 2 1/2” - 11	72,0	21,0	14,0
Gc 3” - 11	85,0	24,1	17,1
		max	min

Alphanumeric index

Air distribution

Coding	Series	Family	Page
1001...	1000	ISO 5599-1 valves & solenoid valves	308
1001.52...	1000	ISO 5599-1 valves & solenoid valves	304
1001.53...	1000	ISO 5599-1 valves & solenoid valves	304
1002...	1000	ISO 5599-1 valves & solenoid valves	308
1002.52...	1000	ISO 5599-1 valves & solenoid valves	306
1002.53...	1000	ISO 5599-1 valves & solenoid valves	306
1011.52...	1000	ISO 5599-1 valves & solenoid valves	309
1011.52...	1000	ISO 5599-1 valves & solenoid valves	310
1011.53...	1000	ISO 5599-1 valves & solenoid valves	309
1011.53...	1000	ISO 5599-1 valves & solenoid valves	310
1012.52...	1000	ISO 5599-1 valves & solenoid valves	311
1012.52...	1000	ISO 5599-1 valves & solenoid valves	312
1012.53...	1000	ISO 5599-1 valves & solenoid valves	311
1012.53...	1000	ISO 5599-1 valves & solenoid valves	312
1013.52...	1000	ISO 5599-1 valves & solenoid valves	313-314
1013.53...	1000	ISO 5599-1 valves & solenoid valves	313-314
104...0.1...	104	Spool valves & solenoid valves	2
104...11.1...	104	Spool valves & solenoid valves	11
104...2.1	104	Spool valves & solenoid valves	9
104...2.1/1...	104	Spool valves & solenoid valves	9
104...3.1...	104	Spool valves & solenoid valves	9
104...6.22/...	104	Spool valves & solenoid valves	2
104...6.23...	104	Spool valves & solenoid valves	4
104...6.25...	104	Spool valves & solenoid valves	5
104...6.31...	104	Spool valves & solenoid valves	3
104...F1.6.27...	104	Spool valves & solenoid valves	7
104...F1.6.28...	104	Spool valves & solenoid valves	8
104...F1.6.30...	104	Spool valves & solenoid valves	6
104.00	104	Spool valves & solenoid valves	10
104.02	104	Spool valves & solenoid valves	10
104.11	104	Spool valves & solenoid valves	10
104.2...	104	Spool valves & solenoid valves	10
104.3.1	104	Spool valves & solenoid valves	10
104.6...	104	Spool valves & solenoid valves	10
104.F	104	Spool valves & solenoid valves	10
105...0...	105	Spool valves & solenoid valves	13
105...11...	105	Spool valves & solenoid valves	20
105...2...	105	Spool valves & solenoid valves	13-14
105...3...	105	Spool valves & solenoid valves	14
105...4...	105	Spool valves & solenoid valves	14
105...5...	105	Spool valves & solenoid valves	15

Coding	Series	Family	Page
105...6...	105	Spool valves & solenoid valves	15-16-17-19
105...7...	105	Spool valves & solenoid valves	17
105...8...	105	Spool valves & solenoid valves	18
105...9...	105	Spool valves & solenoid valves	18
1051.52...	1000	ISO 5599-1 valves & solenoid valves	305
1051.53...	1000	ISO 5599-1 valves & solenoid valves	305
1052.52...	1000	ISO 5599-1 valves & solenoid valves	307
1052.53...	1000	ISO 5599-1 valves & solenoid valves	307
110T...	1100	ISO 5599-1 valves & solenoid valves	316-317-318-319
1111.52...	1000 M12	ISO 5599-1 valves & solenoid valves	321
1111.53...	1000 M12	ISO 5599-1 valves & solenoid valves	322
1112.52...	1000 M12	ISO 5599-1 valves & solenoid valves	323
1112.53...	1000 M12	ISO 5599-1 valves & solenoid valves	324
1113.52...	1000 M12	ISO 5599-1 valves & solenoid valves	325-326
1113.53...	1000 M12	ISO 5599-1 valves & solenoid valves	326
17522A...	1750-1760	Accessorieses - Miniaturized proportional pressure regulators	370
17602A...	1750-1760	Accessorieses - Miniaturized proportional pressure regulators	370
17602B...	1750-1760	Accessorieses - Miniaturized proportional pressure regulators	370
2100.02...	2100	Spool valves & solenoid valves	136
2100.03...	2100	Spool valves & solenoid valves	134
2100.04...	2100	Spool valves & solenoid valves	136
211...11...	200	Spool valves & solenoid valves	52
211...9...	200	Spool valves & solenoid valves	50
211.53...11...	200	Spool valves & solenoid valves	53
211.53...9...	200	Spool valves & solenoid valves	50-51
2115.52.00...	2100	Spool valves & solenoid valves	124-125
2115.53...	2100	Spool valves & solenoid valves	126
212...11...	200	Spool valves & solenoid valves	46
212...9...	200	Spool valves & solenoid valves	44
212.53...11...	200	Spool valves & solenoid valves	47
212.53...9...	200	Spool valves & solenoid valves	44-45
212/2...11...	200	Spool valves & solenoid valves	48-49
212/2.53...11...	200	Spool valves & solenoid valves	49
2130...	2100	Spool valves & solenoid valves	133-134
2135.52.00...	2100	Spool valves & solenoid valves	127-128
2135.53...	2100	Spool valves & solenoid valves	129
214...10...	200	Spool valves & solenoid valves	43
2141.52.00...	2100	Spool valves & solenoid valves	130-131
2141.53...	2100	Spool valves & solenoid valves	132

Overall dimensions and technical information are provided solely for informative purposes and may be modified without notice

Coding	Series	Family	Page
214V...	2100	Spool valves & solenoid valves	133
2230.17	2200	Solenoid valves manifold	426
224...1...	200	Spool valves & solenoid valves	36
224...10...	200	Spool valves & solenoid valves	38
224...11...	200	Spool valves & solenoid valves	41
224...2...	200	Spool valves & solenoid valves	36
224...3...	200	Spool valves & solenoid valves	36
224...8...	200	Spool valves & solenoid valves	37
224...9...	200	Spool valves & solenoid valves	37-38-39
224.53...10...	200	Spool valves & solenoid valves	40
224.53...11...	200	Spool valves & solenoid valves	42
224.53...9...	200	Spool valves & solenoid valves	39-40
2240.00	2200	Solenoid valves manifold	424
2240.00	2200-Sc	Solenoid valves manifold	452
2240.02...	2200	Solenoid valves manifold	424
2240.03…	2200	Solenoid valves manifold	424
2240.08S	2200	Solenoid valves manifold	427
2240.10	2200	Solenoid valves manifold	425
2240.12...	2200	Solenoid valves manifold	424
2240.KD.00	2200	Solenoid valves manifold	426
2240.KT...	2200	Solenoid valves manifold	426
2241.52.00...	2200	Solenoid valves manifold	422
2241.52.00...	2200-Sc	Solenoid valves manifold	449
2241.53.31...	2200	Solenoid valves manifold	423
2241.53.31...	2200-Sc	Solenoid valves manifold	450
2241.62...	2200	Solenoid valves manifold	423
2241.62...	2200-Sc	Solenoid valves manifold	450
224C...	2200	Solenoid valves manifold	425
228...0...	200	Spool valves & solenoid valves	22
228...1...	200	Spool valves & solenoid valves	22
228...10...	200	Spool valves & solenoid valves	29-30-31
228...11...	200	Spool valves & solenoid valves	34-35
228...13...	200	Spool valves & solenoid valves	35
228...2...	200	Spool valves & solenoid valves	22-23
228...27...	200	Spool valves & solenoid valves	23
228...3...	200	Spool valves & solenoid valves	24
228...4...	200	Spool valves & solenoid valves	24
228...5...	200	Spool valves & solenoid valves	25
228...55...	200	Spool valves & solenoid valves	25
228...6...	200	Spool valves & solenoid valves	25-26-27
228...7...	200	Spool valves & solenoid valves	28
228...8...	200	Spool valves & solenoid valves	28
228...9...	200	Spool valves & solenoid valves	29
228.53...10...	200	Spool valves & solenoid valves	33
228.53...11...	200	Spool valves & solenoid valves	35
228.53...9...	200	Spool valves & solenoid valves	31
228.53...99...	200	Spool valves & solenoid valves	32-33
2300...	2300	Solenoid valves manifold	407
2300.16	2300	Solenoid valves manifold	407
2300.16	3000	Solenoid valves manifold	537
2300.25...	2100	Spool valves & solenoid valves	137
2300.25...	2400	Spool valves & solenoid valves	160
2300.25...	2700	ISO15407-2 valves & solenoid valves	377
2300.25...	2200	Solenoid valves manifold	426
2300.25...	2500-F	Solenoid valves manifold	464
2300.25...	2500-T	Solenoid valves manifold	496
2300.25...	2300	Solenoid valves manifold	408
2300.25...	3000	Solenoid valves manifold	538

Coding	Series	Family	Page
2300.44...	3000	Solenoid valves manifold	538
2300.50	2300	Solenoid valves manifold	407
2308...	2300	Solenoid valves manifold	407
230C.42...	2300	Solenoid valves manifold	404-405
230C.53.31...	2300	Solenoid valves manifold	402
230C.62...	2300	Solenoid valves manifold	403-404
2311.03...	2300	Solenoid valves manifold	406
2311.05...	2300	Solenoid valves manifold	406
2312.00	2300	Solenoid valves manifold	406
2317...	2300	Solenoid valves manifold	408
23EC.52.00...	2300	Solenoid valves manifold	401-402
2400...L...	2100	Spool valves & solenoid valves	137-160
2400...L...	2400	Spool valves & solenoid valves	160
2400.00	2400	Spool valves & solenoid valves	159
2400.04.25	2400	Spool valves & solenoid valves	160
2400.09....00	2200-Sc	Solenoid valves manifold	452
2400.15...00	2200-Sc	Solenoid valves manifold	452
2400.15.00	2400	Spool valves & solenoid valves	159
2400.15.02	2400	Spool valves & solenoid valves	160
2400.25...25	2700	ISO15407-2 valves & solenoid valves	377
2400.25...25	2200	Solenoid valves manifold	426
2400.25...25	2500-F	Solenoid valves manifold	464
2400.25...25	2500-T	Solenoid valves manifold	496
2400.37...	2100	Spool valves & solenoid valves	137
2400.37...	2400	Spool valves & solenoid valves	160
2400.37...	2700	ISO15407-2 valves & solenoid valves	377
2400.37...	2200	Solenoid valves manifold	426
2400.37...	2500-F	Solenoid valves manifold	464
2400.37...	2500-T	Solenoid valves manifold	496
2400.37...	3000	Solenoid valves manifold	538
2400.P...	2400	Spool valves & solenoid valves	159
241A.52.00...	2400	Spool valves & solenoid valves	140-141-143
241A.53...	2400	Spool valves & solenoid valves	143
241A.62...	2400	Spool valves & solenoid valves	144
2430...	2400	Spool valves & solenoid valves	150-151
2430.50	2400	Spool valves & solenoid valves	159
243A.52.00...	2400	Spool valves & solenoid valves	145-146-147
243A.53...	2400	Spool valves & solenoid valves	148
243A.62...	2400	Spool valves & solenoid valves	148-149
2440...	2400	Spool valves & solenoid valves	157
2440.50	2400	Spool valves & solenoid valves	159
2445.52.00...	2400	Spool valves & solenoid valves	152-153
2445.62...	2400	Spool valves & solenoid valves	156
244C.52.00...	2400	Spool valves & solenoid valves	154
244C.53...	2400	Spool valves & solenoid valves	155
2530.00	2500-F	Solenoid valves manifold	459
2530.00	2500-T	Solenoid valves manifold	489
2530.01B	2500-F	Solenoid valves manifold	459
2530.01M	2500-F	Solenoid valves manifold	459
2530.02...	2500-F	Solenoid valves manifold	458
2530.03...	2500-F	Solenoid valves manifold	458
2530.08F	2500-F	Solenoid valves manifold	467
2530.10	2500-F	Solenoid valves manifold	459
2530.10.2A	2500-F	Solenoid valves manifold	460
2530.10.4A	2500-F	Solenoid valves manifold	462
2530.12...	2500-F	Solenoid valves manifold	458
2530.17	2500-F	Solenoid valves manifold	464
2530.17	2500-T	Solenoid valves manifold	496

Coding	Series	Family	Page
2531.52.00...	2500-F	Solenoid valves manifold	456
2531.53.31...	2500-F	Solenoid valves manifold	457
2531.62...	2500-F	Solenoid valves manifold	457
2540.02...	2500-T	Solenoid valves manifold	489
2540.03...	2500-T	Solenoid valves manifold	489
2540.08T	2700	ISO15407-2 valves & solenoid valves	380
2540.08T	2500-T	Solenoid valves manifold	499
2540.10	2500-T	Solenoid valves manifold	490
2540.10.2A	2500-T	Solenoid valves manifold	492
2540.10.4A	2500-T	Solenoid valves manifold	494
2540.12...	2500-T	Solenoid valves manifold	489
2540.KD.00	2500-T	Solenoid valves manifold	490
2540.KP.01	2500-T	Solenoid valves manifold	490
2540.KT.P	2500-T	Solenoid valves manifold	496
2541.01...	2500-T	Solenoid valves manifold	490
2541.52.00...	2500-T	Solenoid valves manifold	487
2541.53.31...	2500-T	Solenoid valves manifold	488
2541.62...	2500-T	Solenoid valves manifold	488
2544.01...	2500-T	Solenoid valves manifold	490
2546.01...	2500-T	Solenoid valves manifold	490
2548.01...	2500-T	Solenoid valves manifold	490
261Ⓐ.52.00...	2600	Spool valves & solenoid valves	163-164-165
261Ⓐ.53...	2600	Spool valves & solenoid valves	166
2630...	2600	Spool valves & solenoid valves	171
263Ⓐ.52.00...	2600	Spool valves & solenoid valves	167-168-169
263Ⓐ.52.00...	2600	Spool valves & solenoid valves	169
263Ⓐ.53...	2600	Spool valves & solenoid valves	170
2640...	2600	Spool valves & solenoid valves	176-177
2645.52.00...	2600	Spool valves & solenoid valves	172-173
264Ⓒ.52.00...	2600	Spool valves & solenoid valves	174
264Ⓒ.53...	2600	Spool valves & solenoid valves	175
2740.00	2700	ISO15407-2 valves & solenoid valves	377
2740.01...	2700	ISO15407-2 valves & solenoid valves	376
2740.02...	2700	ISO15407-2 valves & solenoid valves	376
2740.03...	2700	ISO15407-2 valves & solenoid valves	376
2740.17	2700	ISO15407-2 valves & solenoid valves	377
2741.52.00...	2700	ISO15407-2 valves & solenoid valves	374
2741.53.31...	2700	ISO15407-2 valves & solenoid valves	375
2741.62...35...	2700	ISO15407-2 valves & solenoid valves	375
300...	300	Direct operated solenoid valves	204-205
305...	300	Direct operated solenoid valves	194-195
305.11...	300	Direct operated solenoid valves	198
305.M...	300	Direct operated solenoid valves	198
305.M1	300	Direct operated solenoid valves	197
305.M1/1	300	Direct operated solenoid valves	197
305.M1/9	300	Direct operated solenoid valves	197
305.M5/B	300	Direct operated solenoid valves	200
3115...	3000	Solenoid valves manifold	528
3115.52.00...	3000	Solenoid valves manifold	524-526
3115.53.00...	3000	Solenoid valves manifold	525-527
3115.62.00...	3000	Solenoid valves manifold	525-527
3130.17	3000	Solenoid valves manifold	538
3140...	3000	Solenoid valves manifold	536
3140.10	3000	Solenoid valves manifold	537
3141.52.00...	3000	Solenoid valves manifold	534
3141.53.00...	3000	Solenoid valves manifold	535
3141.62.00...	3000	Solenoid valves manifold	535
3145...	3000	Solenoid valves manifold	539

Coding	Series	Family	Page
315...	300	Direct operated solenoid valves	186
345.M1	300	Direct operated solenoid valves	197
345.M1/1	300	Direct operated solenoid valves	197
345.M1/9	300	Direct operated solenoid valves	197
345.M5/B	300	Direct operated solenoid valves	200
354...	300	Direct operated solenoid valves	186
355...	300	Direct operated solenoid valves	186
355.M1	300	Direct operated solenoid valves	197
355.M1/1	300	Direct operated solenoid valves	197
355.M1/9	300	Direct operated solenoid valves	197
355.M5/B	300	Direct operated solenoid valves	200
35M...	300	Direct operated solenoid valves	188
35S...	300	Direct operated solenoid valves	189
371...	300	Direct operated solenoid valves	18
395...	300	Direct operated solenoid valves	183
395.00	300	Direct operated solenoid valves	180-181
411...0.0...	400	Spool valves & solenoid valves	108
411...0.1...	400	Spool valves & solenoid valves	107
411...0.12...	400	Spool valves & solenoid valves	107
411.53...0...	400	Spool valves & solenoid valves	108
412/2...0.0...	400	Spool valves & solenoid valves	106
412/2...0.1...	400	Spool valves & solenoid valves	105
412/2...0.12...	400	Spool valves & solenoid valves	105
412/2.53...0.0...	400	Spool valves & solenoid valves	106
452...0.0...	400	Spool valves & solenoid valves	102
452...0.1...	400	Spool valves & solenoid valves	101
452...0.12...	400	Spool valves & solenoid valves	101
452.53...0...	400	Spool valves & solenoid valves	102
452/1...0.0...	400	Spool valves & solenoid valves	104
452/1...0.1...	400	Spool valves & solenoid valves	103
452/1...0.12...	400	Spool valves & solenoid valves	103
452/1.53...0...	400	Spool valves & solenoid valves	104
464...0.0...	400	Spool valves & solenoid valves	97
464...0.1...	400	Spool valves & solenoid valves	97
464...0.12...	400	Spool valves & solenoid valves	97
464.53...0...	400	Spool valves & solenoid valves	98
464/1...0.0...	400	Spool valves & solenoid valves	99
464/1...0.1...	400	Spool valves & solenoid valves	99
464/1...0.12...	400	Spool valves & solenoid valves	99
464/1.53...0...	400	Spool valves & solenoid valves	100
468...0.0...	400	Spool valves & solenoid valves	91
468...0.1...	400	Spool valves & solenoid valves	91
468...0.12...	400	Spool valves & solenoid valves	91
468.53...0...	400	Spool valves & solenoid valves	92
468/1...0.0...	400	Spool valves & solenoid valves	93
468/1...0.1...	400	Spool valves & solenoid valves	92
468/1...0.12...	400	Spool valves & solenoid valves	92
468/1.53...0...	400	Spool valves & solenoid valves	93
488...	400	Spool valves & solenoid valves	96
488...0.0...	400	Spool valves & solenoid valves	94
488...0.1...	400	Spool valves & solenoid valves	94
488...0.12...	400	Spool valves & solenoid valves	94
488.53...0...	400	Spool valves & solenoid valves	95
50…	50-T50	Accessorieses - Blocking valves	350-351
5030.M12	3000	Solenoid valves manifold	552
5130..	3000	Solenoid valves manifold	547-548-550-551
514/N...	514/N	“Namur” valves and solenoid valves	284

Overall dimensions and technical information are provided solely for informative purposes and may be modified without notice

Coding	Series	Family	Page
5200.08	2300	Solenoid valves manifold	418
5222.08S	2200	Solenoid valves manifold	445
5225.08F	2500-F	Solenoid valves manifold	481
5225.08T	2700	ISO15407-2 valves & solenoid valves	393
5225.08T	2500-T	Solenoid valves manifold	513
5225.12T	2700	ISO15407-2 valves & solenoid valves	394
5225.12T	2500-T	Solenoid valves manifold	514
5225.2 _ . _ _T	2700	ISO15407-2 valves & solenoid valves	395
5225.25F	2500-F	Solenoid valves manifold	482
5225.2C.00F	2500-F	Solenoid valves manifold	483
5225.2C.00T	2500-T	Solenoid valves manifold	515
5225.2C.01F	2500-F	Solenoid valves manifold	483
5225.2C.01T	2500-T	Solenoid valves manifold	515
5225.2P . 0 _T	2700	ISO15407-2 valves & solenoid valves	396
5225.2P . 1 _T	2700	ISO15407-2 valves & solenoid valves	397
5225.2P.00T	2500-T	Solenoid valves manifold	516
5225.2P.10T	2500-T	Solenoid valves manifold	517
5225.2P.01T	2500-T	Solenoid valves manifold	516
5225.2P.11T	2500-T	Solenoid valves manifold	517
5225.2T.00F	2500-F	Solenoid valves manifold	483
5225.2T.00T	2500-T	Solenoid valves manifold	515
5225.2T.01F	2500-F	Solenoid valves manifold	483
5225.2T.01T	2500-T	Solenoid valves manifold	515
5230..	3000	Solenoid valves manifold	546-548-549
5300.T08	2700	ISO15407-2 valves & solenoid valves	398
5300.T08	2200	Solenoid valves manifold	446
5300.T08	2500-F	Solenoid valves manifold	484
5300.T08	2500-T	Solenoid valves manifold	518
5300.T12	2700	ISO15407-2 valves & solenoid valves	398
5300.T12	2200	Solenoid valves manifold	446
5300.T12	2500-F	Solenoid valves manifold	484
5300.T12	2500-T	Solenoid valves manifold	518
5308A.M03.00	2700	ISO15407-2 valves & solenoid valves	398
5308A.M03.00	2200	Solenoid valves manifold	446
5308A.M03.00	2500-F	Solenoid valves manifold	484
5308A.M03.00	2500-T	Solenoid valves manifold	518
5312A.F04.00	2700	ISO15407-2 valves & solenoid valves	398
5312A.F04.00	2200	Solenoid valves manifold	446
5312A.F04.00	2500-F	Solenoid valves manifold	484
5312A.F04.00	2500-T	Solenoid valves manifold	518
5312A.F05.00	2700	ISO15407-2 valves & solenoid valves	398
5312A.F05.00	2200	Solenoid valves manifold	446
5312A.F05.00	2500-F	Solenoid valves manifold	484
5312A.F05.00	2500-T	Solenoid valves manifold	518
5312A.M05.00	2700	ISO15407-2 valves & solenoid valves	398
5312A.M05.00	2700	ISO15407-2 valves & solenoid valves	398
5312A.M05.00	2200	Solenoid valves manifold	446
5312A.M05.00	2500-F	Solenoid valves manifold	484
5312A.M05.00	2500-F	Solenoid valves manifold	484
5312A.M05.00	2500-T	Solenoid valves manifold	518
5312A.M05.00	2500-T	Solenoid valves manifold	518
5312B.F05.00	2700	ISO15407-2 valves & solenoid valves	398
5312B.F05.00	2200	Solenoid valves manifold	446
5312B.F05.00	2500-F	Solenoid valves manifold	484
5312B.F05.00	2500-T	Solenoid valves manifold	518
5312B.M05.00	2700	ISO15407-2 valves & solenoid valves	398
5312B.M05.00	2200	Solenoid valves manifold	446
5312B.M05.00	2500-F	Solenoid valves manifold	484
5312B.M05.00	2500-T	Solenoid valves manifold	518
5312D.M04.00	2700	ISO15407-2 valves & solenoid valves	398
5312D.M04.00	2200	Solenoid valves manifold	446
5312D.M04.00	2500-F	Solenoid valves manifold	484
5312D.M04.00	2500-T	Solenoid valves manifold	518
5322.32S	2200	Solenoid valves manifold	438
5323.22	2300	Solenoid valves manifold	417
5325.32F	2500-F	Solenoid valves manifold	475
5325.32T	2700	ISO15407-2 valves & solenoid valves	387
5325.32T	2500-T	Solenoid valves manifold	507
5330.64...	3000	Solenoid valves manifold	543
5422.32S	2200	Solenoid valves manifold	437
5423.22	2300	Solenoid valves manifold	416
5425.32F	2500-F	Solenoid valves manifold	474
5425.32T	2700	ISO15407-2 valves & solenoid valves	386
5425.32T	2500-T	Solenoid valves manifold	506
551.11...	55	Accessories - Function fittings	355
551.12...	55	Accessories - Function fittings	356
551.13...	55	Accessories - Function fittings	567
551.141...	55	Accessories - Function fittings	359
551.151...	55	Accessories - Function fittings	359
551.161...	55	Accessories - Function fittings	360
551.178...	55	Accessories - Function fittings	360
551.181...	55	Accessories - Function fittings	361
551.1F...	55	Accessories - Function fittings	362
551.1G...	55	Accessories - Function fittings	364
551.1H...	55	Accessories - Function fittings	366
551.22...	55	Accessories - Function fittings	356
551.23...	55	Accessories - Function fittings	358
551.281...	55	Accessories - Function fittings	361
551.2F...	55	Accessories - Function fittings	363
551.2G...	55	Accessories - Function fittings	365
551.2H...	55	Accessories - Function fittings	366
55116	55	Accessories - Function fittings	367
55150	55	Accessories - Function fittings	367
55160	55	Accessories - Function fittings	367
551K...	55	Accessories - Function fittings	368
551KD...	55	Accessories - Function fittings	367
551KG...	55	Accessories - Function fittings	368
551KL1	55	Accessories - Function fittings	368
551KUU	55	Accessories - Function fittings	368
5522.32S	2200	Solenoid valves manifold	436
5523.22	2300	Solenoid valves manifold	415
5525.32F	2500-F	Solenoid valves manifold	473
5525.32T	2700	ISO15407-2 valves & solenoid valves	385
5525.32T	2500-T	Solenoid valves manifold	505
5530.64...	3000	Solenoid valves manifold	542
5722.32S.EC	2200	Solenoid valves manifold	439
5722.32S.EI	2200	Solenoid valves manifold	441
5722.32S.MT	2200	Solenoid valves manifold	443
5722.32S.PL	2200	Solenoid valves manifold	442
5722.32S.PN	2200	Solenoid valves manifold	440
5725.32F.EC	2500-F	Solenoid valves manifold	476
5725.32F.EI	2500-F	Solenoid valves manifold	478
5725.32F.MT	2500-F	Solenoid valves manifold	480
5725.32F.PL	2500-F	Solenoid valves manifold	479
5725.32F.PN	2500-F	Solenoid valves manifold	477
5725.32T.EC	2700	ISO15407-2 valves & solenoid valves	388

Coding	Series	Family	Page
5725.32T.EC	2500-T	Solenoid valves manifold	508
5725.32T.EI	2700	ISO15407-2 valves & solenoid valves	390
5725.32T.EI	2500-T	Solenoid valves manifold	510
5725.32T.MT	2700	ISO15407-2 valves & solenoid valves	392
5725.32T.MT	2500-T	Solenoid valves manifold	512
5725.32T.PL	2700	ISO15407-2 valves & solenoid valves	391
5725.32T.PL	2500-T	Solenoid valves manifold	511
5725.32T.PN	2700	ISO15407-2 valves & solenoid valves	389
5725.32T.PN	2500-T	Solenoid valves manifold	509
5730.128...	3000	Solenoid valves manifold	544
5822.32S	2200	Solenoid valves manifold	444
5830.64...	3000	Solenoid valves manifold	545
6.01.05...	600	Accessories-Pneumatic circuit devices	329-330
6.01.05.180	600	Accessories-Pneumatic circuit devices	330
6.01.05.180/2	600	Accessories-Pneumatic circuit devices	330
6.01.05.90	600	Accessories-Pneumatic circuit devices	329
6.01.05.90/2	600	Accessories-Pneumatic circuit devices	329
6.01.05/2	600	Accessories-Pneumatic circuit devices	329
6.01.12	600	Accessories-Pneumatic circuit devices	331
6.01.12/1N	600	Accessories-Pneumatic circuit devices	331
6.01.14/1	600	Accessories-Pneumatic circuit devices	331
6.01.14/1N	600	Accessories-Pneumatic circuit devices	331
6.01.14N	600	Accessories-Pneumatic circuit devices	331
6.01.18...	600	Accessories-Pneumatic circuit devices	330
6.01.18/...	600	Accessories-Pneumatic circuit devices	330
6.01.305...	600	Accessories-Pneumatic circuit devices	328
6.01.315...	600	Accessories-Pneumatic circuit devices	328
6.01.34	600	Accessories-Pneumatic circuit devices	331
6.01.45...	600	Accessories-Pneumatic circuit devices	329
6.02...	600	Accessories-Pneumatic circuit devices	332
6.03...	600	Accessories-Pneumatic circuit devices	332
6.04...	600	Accessories-Pneumatic circuit devices	333
6.04.../1	600	Accessories-Pneumatic circuit devices	333
6.04.04	600	Accessories-Pneumatic circuit devices	333
6.04.04/1	600	Accessories-Pneumatic circuit devices	334
6.05...	600	Accessories-Pneumatic circuit devices	334
6.06.I	600	Accessories-Pneumatic circuit devices	334
6.07...	600	Accessories-Pneumatic circuit devices	335
6.07.18...	600	Accessories-Pneumatic circuit devices	335
6.08.../4	600	Accessories-Pneumatic circuit devices	335
6.08.../8	600	Accessories-Pneumatic circuit devices	336
6.09.12...	600	Accessories-Pneumatic circuit devices	336
6.09.14...	600	Accessories-Pneumatic circuit devices	336
6.10.14...	600	Accessories-Pneumatic circuit devices	339
6.10.18...	600	Accessories-Pneumatic circuit devices	338
6.11...	600	Accessories-Pneumatic circuit devices	337
6.13.00	600	Accessories-Pneumatic circuit devices	340
771...	700	Poppet valves and solenoid valves	215
771/V...	700	Poppet valves and solenoid valves	216
772...	700	Poppet valves and solenoid valves	211
772/V...	700	Poppet valves and solenoid valves	212
773...	700	Poppet valves and solenoid valves	213
773/V...	700	Poppet valves and solenoid valves	214
776...	700	Poppet valves and solenoid valves	217-218
776/V...	700	Poppet valves and solenoid valves	219-220
779...	700	Poppet valves and solenoid valves	209
779/V...	700	Poppet valves and solenoid valves	210
805...	800	Spool valves & solenoid valves	71

Coding	Series	Family	Page
805...0...	800	Spool valves & solenoid valves	70
805...11...	800	Spool valves & solenoid valves	69
808...	800	Spool valves & solenoid valves	76
808...0...	800	Spool valves & solenoid valves	74
808...11...	800	Spool valves & solenoid valves	72
808.53...0...	800	Spool valves & solenoid valves	75
808.53...11...	800	Spool valves & solenoid valves	73
888...	888	Spool valves & solenoid valves	83
8880.32...	888	Spool valves & solenoid valves	78
8880.52.00.35...	888	Spool valves & solenoid valves	78-79
8880.52.00.39...	888	Spool valves & solenoid valves	78
8880.53...	888	Spool valves & solenoid valves	79
8880E.32...	888	Spool valves & solenoid valves	79
8880E.32.00.35...	888	Spool valves & solenoid valves	80
8880E.52.00.35...	888	Spool valves & solenoid valves	80
8880E.52.00.39...	888	Spool valves & solenoid valves	80
8880E.53...	888	Spool valves & solenoid valves	81
8883...	888	Spool valves & solenoid valves	84
8884.32.00.39...	888	Spool valves & solenoid valves	82
8884.52.00.35...	888	Spool valves & solenoid valves	82
8884.52.00.39...	888	Spool valves & solenoid valves	81
8884.53...35...	888	Spool valves & solenoid valves	82
888M...	888	Spool valves & solenoid valves	85
900.005	900	Accessories -Complementary valves	347
900.14.7	900	Accessories -Complementary valves	346
900.18...	900	Accessories -Complementary valves	342-343
900.18...	900	Accessories -Complementary valves	347
900.18.10	900	Accessories -Complementary valves	344
900.18.11	900	Accessories -Complementary valves	344
900.18.9	900	Accessories -Complementary valves	344
900.19.01	900	Accessories -Complementary valves	348
900.32.6	900	Accessories -Complementary valves	346
900.52...	900	Accessories -Complementary valves	345-346
900.52.1.1	900	Accessories -Complementary valves	343
CMP1E...	2200-Sc	Solenoid valves manifold	451
CMP9E...	2200-Sc	Solenoid valves manifold	451
F3105...	F300	Poppet valves and solenoid valves	256
F3106...	F300	Poppet valves and solenoid valves	257-258
F3107...	F300	Poppet valves and solenoid valves	259-260
F3108...	F300	Poppet valves and solenoid valves	272
F3110...	F300	Poppet valves and solenoid valves	261
F3111...	F300	Poppet valves and solenoid valves	262
F3119...	F300	Poppet valves and solenoid valves	273-274
F3119W...	F300	Poppet valves and solenoid valves	275
F3177...	F300	Poppet valves and solenoid valves	263
F3206...	F300	Poppet valves and solenoid valves	264-265
F3207...	F300	Poppet valves and solenoid valves	266
F3210...	F300	Poppet valves and solenoid valves	267
F3211...	F300	Poppet valves and solenoid valves	268
F3277...	F300	Poppet valves and solenoid valves	269
F3310...	F300	Poppet valves and solenoid valves	270
F3331...	F300	Poppet valves and solenoid valves	271
FX3106...	F300	Poppet valves and solenoid valves	276-277
FX3107	F300	Poppet valves and solenoid valves	278
FX3110	F300	Poppet valves and solenoid valves	279
FX3177	F300	Poppet valves and solenoid valves	280
M2...	300	Direct operated solenoid valves	192-193
M3...	300	Direct operated solenoid valves	201

Overall dimensions and technical information are provided solely for informative purposes and may be modified without notice

Coding	Series	Family	Page
M4...	300	Direct operated solenoid valves	201
M5/B	300	Direct operated solenoid valves	200
M514...00...	514	"Namur" valves and solenoid valves	291-292-293-294-295
M514.92...	514	"Namur" valves and solenoid valves	296
M515.52...	515	"Namur" valves and solenoid valves	298-299-300-301-302
MB...	300	Direct operated solenoid valves	193-199
MC...	300	Direct operated solenoid valves	201
MG...	F300	Poppet valves and solenoid valves	281
MI...	F300	Poppet valves and solenoid valves	281
MK...	F300	Poppet valves and solenoid valves	281
MM7	300	Direct operated solenoid valves	192
N33...	300	Direct operated solenoid valves	185
N34...	300	Direct operated solenoid valves	185
N36...	300	Direct operated solenoid valves	180
N37...	300	Direct operated solenoid valves	180
N38...	300	Direct operated solenoid valves	180
N776...	N776	Poppet valves and solenoid valves	222
N776/V...	N776	Poppet valves and solenoid valves	224
P3...	300	Direct operated solenoid valves	181
P377.4...	300	Direct operated solenoid valves	182
P395...	300	Direct operated solenoid valves	183
PVA.B...T...	PVA	Poppet valves and solenoid valves	250
PVA.B...Y...	PVA	Poppet valves and solenoid valves	251
PVF...	F300	Poppet valves and solenoid valves	282
RDR…	Mini-RAP	Accessories - Compact fittings for lubrication	372
RDR560	3000	Solenoid valves manifold	537
RGR…	Mini-RAP	Accessories - Compact fittings for lubrication	372
S...	300	Direct operated solenoid valves	204
SPLP...	2500-F	Solenoid valves manifold	464
SPLR...	2500-T	Solenoid valves manifold	496
SPLR...	2200	Solenoid valves manifold	426
T224...11...	T200	Spool valves & solenoid valves	66
T224...8...	T200	Spool valves & solenoid valves	64
T224...9...	T200	Spool valves & solenoid valves	64-65
T224.53...11...	T200	Spool valves & solenoid valves	67
T224.53...9...	T200	Spool valves & solenoid valves	65
T228...0...	T200	Spool valves & solenoid valves	55
T228...1...	T200	Spool valves & solenoid valves	55
T228...11...	T200	Spool valves & solenoid valves	62-63
T228...2...	T200	Spool valves & solenoid valves	55-56
T228...3...	T200	Spool valves & solenoid valves	56
T228...5...	T200	Spool valves & solenoid valves	57
T228...55...	T200	Spool valves & solenoid valves	57
T228...6...	T200	Spool valves & solenoid valves	57-58-59
T228...7...	T200	Spool valves & solenoid valves	59
T228...8...	T200	Spool valves & solenoid valves	60
T228...9...	T200	Spool valves & solenoid valves	60-61
T228.53...11...	T200	Spool valves & solenoid valves	63
T228.53...9...	T200	Spool valves & solenoid valves	61
T424...	T400	Spool valves & solenoid valves	121
T424...0.0...	T400	Spool valves & solenoid valves	119
T424...0.1...	T400	Spool valves & solenoid valves	117
T424...0.12...	T400	Spool valves & solenoid valves	118
T424.00	T400	Spool valves & solenoid valves	121
T424.53...0...	T400	Spool valves & solenoid valves	120

Coding	Series	Family	Page
T488...	T400	Spool valves & solenoid valves	116
T488...0.0...	T400	Spool valves & solenoid valves	114
T488...0.1...	T400	Spool valves & solenoid valves	112
T488...0.12...	T400	Spool valves & solenoid valves	113
T488...11.1	T400	Spool valves & solenoid valves	110
T488...11.11	T400	Spool valves & solenoid valves	110
T488...11.12	T400	Spool valves & solenoid valves	110
T488.00	T400	Spool valves & solenoid valves	116
T488.53...0...	T400	Spool valves & solenoid valves	115
T488.53...11.11	T400	Spool valves & solenoid valves	111
T50…	50-T50	Accessorieses - Blocking valves	352-353
T514...	T514	"Namur" valves and solenoid valves	286-287-288
T514.92...	T514	"Namur" valves and solenoid valves	289
T771...	T771	Poppet valves and solenoid valves	242-243
T771....BP	T771	Poppet valves and solenoid valves	247
T771/V...	T771	Poppet valves and solenoid valves	245-246
T771/V.32....BP	T771	Poppet valves and solenoid valves	248
T771/VS...	T771	Poppet valves and solenoid valves	246
T771/VS.32....BP	T771	Poppet valves and solenoid valves	248
T771S...	T771	Poppet valves and solenoid valves	243-244
T771S....BP	T771	Poppet valves and solenoid valves	247
T772...	T772-773	Poppet valves and solenoid valves	227-228
T772...BP	T772-773	Poppet valves and solenoid valves	237
T772/V...	T772-773	Poppet valves and solenoid valves	230-231
T772/V...BP	T772-773	Poppet valves and solenoid valves	239
T772/VS...	T772-773	Poppet valves and solenoid valves	231
T772/VS...BP	T772-773	Poppet valves and solenoid valves	240
T772S...	T772-773	Poppet valves and solenoid valves	228-229
T772S...BP	T772-773	Poppet valves and solenoid valves	238
T773...	T772-773	Poppet valves and solenoid valves	232-233
T773...BP	T772-773	Poppet valves and solenoid valves	237
T773/V...	T772-773	Poppet valves and solenoid valves	235-236
T773/V...BP	T772-773	Poppet valves and solenoid valves	239
T773/VS...	T772-773	Poppet valves and solenoid valves	236
T773/VS...BP	T772-773	Poppet valves and solenoid valves	240
T773S...	T772-773	Poppet valves and solenoid valves	233-234
T773S...BP	T772-773	Poppet valves and solenoid valves	238
U3...	300	Direct operated solenoid valves	207
UM2...	300	Direct operated solenoid valves	206
UM2/1...	300	Direct operated solenoid valves	206
UMB...	300	Direct operated solenoid valves	206-207
UMC...	300	Direct operated solenoid valves	207
UN3...	300	Direct operated solenoid valves	206
US...	300	Direct operated solenoid valves	207
XME...	F300	Poppet valves and solenoid valves	281

Air service units

Coding	Series	Family	Page
10770A…	1700	Air service units	159
10770B…	1700	Air service units	159
1320.50.05/1F	1700 standard	Pressure booster	214
17001A...	1700	Air service units	92-95
17001B...	1700	Air service units	92-95
17003A...	1700	Air service units	132-135
17003B...	1700	Air service units	132-135
17004A...	1700	Air service units	102-105
17004B...	1700	Air service units	102-105
17006A...	1700	Air service units	150-153
17006B...	1700	Air service units	150-153
17007A...	1700	Air service units	154-157
17007B...	1700	Air service units	154-157
17008A.E...	1700	Air service units	96-99
17008B.E...	1700	Air service units	96-99
17022A...	1700	Air service units	106-110
17022B...	1700	Air service units	106-110
17030.A	1700	Air service units	136-137
17030.B	1700	Air service units	136-137
17030.M2	1700	Air service units	138-139
17030.M2/9	1700	Air service units	138-139
17030.PN	1700	Air service units	140-141
17050	1700	Air service units	159
17070A...	P+	Pressure booster	219
17070A...	Airplus	Air service units	32; 38; 52; 80
17070B...	Airplus	Air service units	32; 38; 52; 80
17070MA	1700	Air service units	159
17070MB	1700	Air service units	159
17070MC	1700	Air service units	159
170B2A...	1700	Air service units	127-128
170B2B...	1700	Air service units	127-128
170E0M.C.M...	1700 - Miniaturized	Proportional technology	191
170E0M.C.M...E	1700 - Miniaturized	Proportional technology	198
170E0M.C.M...EFO	1700 - Miniaturized	Proportional technology	199
170E0M.C.M...EFV	1700 - Miniaturized	Proportional technology	200
170E0M.C.M...ETO	1700 - Miniaturized	Proportional technology	201
170E0M.C.M...ETV	1700 - Miniaturized	Proportional technology	202
170E0M.C.M...FO	1700 - Miniaturized	Proportional technology	192
170E0M.C.M...FP	1700 - Miniaturized	Proportional technology	194
170E0M.C.M...FV	1700 - Miniaturized	Proportional technology	193
170E0M.C.M...TO	1700 - Miniaturized	Proportional technology	195
170E0M.C.M...TP	1700 - Miniaturized	Proportional technology	197
170E0M.C.M...TV	1700 - Miniaturized	Proportional technology	196
170E0M.T.M...	1700 - Miniaturized	Proportional technology	191
170E0M.T.M...E	1700 - Miniaturized	Proportional technology	198
170E0M.T.M...EFO	1700 - Miniaturized	Proportional technology	199
170E0M.T.M...EFV	1700 - Miniaturized	Proportional technology	200
170E0M.T.M...ETO	1700 - Miniaturized	Proportional technology	201
170E0M.T.M...ETV	1700 - Miniaturized	Proportional technology	202
170E0M.T.M...FO	1700 - Miniaturized	Proportional technology	192
170E0M.T.M...FP	1700 - Miniaturized	Proportional technology	194
170E0M.T.M...FV	1700 - Miniaturized	Proportional technology	193
170E0M.T.M...TO	1700 - Miniaturized	Proportional technology	195
170E0M.T.M...TP	1700 - Miniaturized	Proportional technology	197
170E0M.T.M...TV	1700 - Miniaturized	Proportional technology	196
170E2M.C.M...	1700 - Miniaturized	Proportional technology	191
170E2M.C.M...E	1700 - Miniaturized	Proportional technology	198
170E2M.C.M...EFO	1700 - Miniaturized	Proportional technology	199
170E2M.C.M...EFV	1700 - Miniaturized	Proportional technology	200
170E2M.C.M...ETO	1700 - Miniaturized	Proportional technology	201
170E2M.C.M...ETV	1700 - Miniaturized	Proportional technology	202
170E2M.C.M...FO	1700 - Miniaturized	Proportional technology	192
170E2M.C.M...FP	1700 - Miniaturized	Proportional technology	194
170E2M.C.M...FV	1700 - Miniaturized	Proportional technology	193
170E2M.C.M...TO	1700 - Miniaturized	Proportional technology	195
170E2M.C.M...TP	1700 - Miniaturized	Proportional technology	197
170E2M.C.M...TV	1700 - Miniaturized	Proportional technology	196
170E2M.T.M...	1700 - Miniaturized	Proportional technology	191
170E2M.T.M...E	1700 - Miniaturized	Proportional technology	198
170E2M.T.M...EFO	1700 - Miniaturized	Proportional technology	199
170E2M.T.M...EFV	1700 - Miniaturized	Proportional technology	200
170E2M.T.M...ETO	1700 - Miniaturized	Proportional technology	201
170E2M.T.M...ETV	1700 - Miniaturized	Proportional technology	202
170E2M.T.M...FO	1700 - Miniaturized	Proportional technology	192
170E2M.T.M...FP	1700 - Miniaturized	Proportional technology	194
170E2M.T.M...FV	1700 - Miniaturized	Proportional technology	193
170E2M.T.M...TO	1700 - Miniaturized	Proportional technology	195
170E2M.T.M...TP	1700 - Miniaturized	Proportional technology	197
170E2M.T.M...TV	1700 - Miniaturized	Proportional technology	196
170E2N.C.D...	1700 standard	Proportional technology	187
170E2N.C.F…	1700 standard	Proportional technology	189
170E2N.C.M...	1700 standard	Proportional technology	188
170E2N.I.B…	1700 standard	Proportional technology	189
170E2N.M.C...	1700 standard	Proportional technology	188
170E2N.S.C...	1700 standard	Proportional technology	187
170E2N.T.D...	1700 standard	Proportional technology	187
170E2N.T.G...	1700 standard	Proportional technology	189
170E2N.T.H...	1700 standard	Proportional technology	189
170E2N.T.M...	1700 standard	Proportional technology	188
170M...EFO	1700 - Miniaturized	Proportional technology	205
170M...EFV	1700 - Miniaturized	Proportional technology	205
170M...FO	1700 - Miniaturized	Proportional technology	204
170M...FV	1700 - Miniaturized	Proportional technology	204
170M1.EFO	1700 - Miniaturized	Proportional technology	199
170M1.EFV	1700 - Miniaturized	Proportional technology	200
170M1.ETO	1700 - Miniaturized	Proportional technology	201
170M1.ETV	1700 - Miniaturized	Proportional technology	202
170M1.FO	1700 - Miniaturized	Proportional technology	192
170M1.FP	1700 - Miniaturized	Proportional technology	194
170M1.FV	1700 - Miniaturized	Proportional technology	193
170M1.TO	1700 - Miniaturized	Proportional technology	195
170M1.TP	1700 - Miniaturized	Proportional technology	197
170M1.TV	1700 - Miniaturized	Proportional technology	196
170M2A...	1700	Air service units	127-128
170M2B...	1700	Air service units	127-128
170M5	1700	Air service units	158
170M5	1700 standard	Proportional technology	187-188-189
170M6	1700	Air service units	160
17100.125N	1700 standard	Pressure booster	213
17100.125NR	1700 standard	Pressure booster	213
17101A...	1700	Air service units	92-95
17101B...	1700	Air service units	92-95
17103A...	1700	Air service units	132-135
17103B...	1700	Air service units	132-135
17104A...	1700	Air service units	102-105
17104B...	1700	Air service units	102-105

Overall dimensions and technical information are provided solely for informative purposes and may be modified without notice

Coding	Series	Family	Page
17106A...	1700	Air service units	150-153
17106B...	1700	Air service units	150-153
17107A...	1700	Air service units	154-157
17107B...	1700	Air service units	154-157
17108A.E...	1700	Air service units	96-99
17108B.E...	1700	Air service units	96-99
17109A...	1700	Air service units	123-124
17109B...	1700	Air service units	123-124
17110.M2	1700	Air service units	142-143
17120	1700	Air service units	142-143
17122A...	1700	Air service units	106-110
17122B...	1700	Air service units	106-110
17129A...	1700	Air service units	125-126
17129B...	1700	Air service units	125-126
17130.A	1700	Air service units	136-137
17130.B	1700	Air service units	136-137
17130.M2	1700	Air service units	138-139
17130.M2/9	1700	Air service units	138-139
17130.MPN	1700	Air service units	140-141
17140	1700	Air service units	140-141
17140H	1700	Air service units	146-147
1714A	1700	Air service units	148-149
1714B	1700	Air service units	148-149
1714C	1700	Air service units	148-149
17150	1700	Air service units	158
17150	Airplus	Air service units	32; 38; 52
17160	1700	Air service units	160
171E2N.C.D...	1700 standard	Proportional technology	187
171E2N.C.F...	1700 standard	Proportional technology	189
171E2N.C.M...	1700 standard	Proportional technology	188
171E2N.I.B...	1700 standard	Proportional technology	189
171E2N.M.C...	1700 standard	Proportional technology	188
171E2N.S.C...	1700 standard	Proportional technology	187
171E2N.T.D...	1700 standard	Proportional technology	187
171E2N.T.G...	1700 standard	Proportional technology	189
171E2N.T.H...	1700 standard	Proportional technology	189
171E2N.T.M...	1700 standard	Proportional technology	188
171S2B...	1700	Air service units	114-116
17201A...	1700	Air service units	92-95
17201B...	1700	Air service units	92-95
17202A.P...	1700	Air service units	117-120
17202B.P...	1700	Air service units	117-120
17203A...	1700	Air service units	132-135
17203B...	1700	Air service units	132-135
17204A...	1700	Air service units	102-105
17204B...	1700	Air service units	102-105
17206A...	1700	Air service units	150-153
17206B...	1700	Air service units	150-153
17207A...	1700	Air service units	154-157
17207B...	1700	Air service units	154-157
17208A.E...	1700	Air service units	96-99
17208B.E...	1700	Air service units	96-99
17210.M2	1700	Air service units	142-143
17220	1700	Air service units	142-143
17222A...	1700	Air service units	106-110
17222B...	1700	Air service units	106-110
17230.A	1700	Air service units	136-137
17230.B	1700	Air service units	136-137
17230.M2	1700	Air service units	138-139

Coding	Series	Family	Page
17230.M2/9	1700	Air service units	138-139
17230.PN	1700	Air service units	140-141
17240	1700	Air service units	144-145
17240H	1700	Air service units	146-147
1724A	1700	Air service units	148-149
1724C	1700	Air service units	148-149
17250	1700	Air service units	158
17260	1700	Air service units	160
17301A...	1700	Air service units	92-95
17301B...	1700	Air service units	92-95
17301E...	1700	Air service units	92-95
17302A.P…	1700	Air service units	117-120
17302B.C	1700 standard	Pressure booster	214
17302B.P...	1700	Air service units	117-120
17303A...	1700	Air service units	132-135
17303B...	1700	Air service units	132-135
17303E...	1700	Air service units	132-135
17304A...	1700	Air service units	102-105
17304B...	1700	Air service units	102-105
17304E...	1700	Air service units	102-105
17306A...	1700	Air service units	150-153
17306B...	1700	Air service units	150-153
17306E...	1700	Air service units	150-153
17307A...	1700	Air service units	154-157
17307B...	1700	Air service units	154-157
17307E...	1700	Air service units	154-157
17308A.E...	1700	Air service units	96-99
17308B.E...	1700	Air service units	96-99
17308E.E...	1700	Air service units	96-99
17310.M2	1700	Air service units	142-143
17320	1700	Air service units	142-143
17322A...	1700	Air service units	106-110
17322B...	1700	Air service units	106-110
17330.A	1700	Air service units	136-137
17330.B	1700	Air service units	136-137
17330.M2	1700	Air service units	138-139
17330.M2/9	1700	Air service units	138-139
17330.PN	1700	Air service units	140-141
17340	1700	Air service units	144-145
17340H	1700	Air service units	146-147
1734A	1700	Air service units	148-149
1734C	1700	Air service units	148-149
17350	1700	Air service units	158
17360	1700	Air service units	160
17381E	1700	Air service units	160
17382E	1700	Air service units	160
173E2N.C.D...	1700 standard	Proportional technology	187
173E2N.C.F...	1700 standard	Proportional technology	189
173E2N.C.M...	1700 standard	Proportional technology	188
173E2N.I.B...	1700 standard	Proportional technology	189
173E2N.M.C...	1700 standard	Proportional technology	188
173E2N.S.C...	1700 standard	Proportional technology	187
173E2N.T.D...	1700 standard	Proportional technology	187
173E2N.T.G...	1700 standard	Proportional technology	189
173E2N.T.H...	1700 standard	Proportional technology	189
173E2N.T.M...	1700 standard	Proportional technology	188
173P2B.0010	1700	Air service units	121-122
173S2B...	1700	Air service units	114-116
1740.02	1700 standard	Pressure booster	214

Coding	Series	Family	Page
1740.50.NR	1700 standard	Pressure booster	211
1740.50N	1700 standard	Pressure booster	211
1740.BR	1700 standard	Pressure booster	214
17401B...	1700	Air service units	92-95
17402NB.P...	1700	Air service units	117-120
17403B...	1700	Air service units	132-135
17408B.E...	1700	Air service units	96-99
1740EB.A.S	1700	Air service units	100-101
1740EB.B.S	1700	Air service units	100-101
1740EB.C.S	1700	Air service units	100-101
17410.M2	1700	Air service units	142-143
17420	1700	Air service units	142-143
17430.A	1700	Air service units	136-137
17430.B	1700	Air service units	136-137
17440	1700	Air service units	144-145
1744A	1700	Air service units	148-149
1744C	1700	Air service units	148-149
17460	1700	Air service units	160
1763.02	1700 standard	Pressure booster	214
1763.80.NR	1700 standard	Pressure booster	212
1763.80N	1700 standard	Pressure booster	212
1763.BR	1700 standard	Pressure booster	214
17BB2A...	1700	Air service units	129-131
17BB2B...	1700	Air service units	129-131
17BM2A...	1700	Air service units	129-131
17BM2B...	1700	Air service units	129-131
5312A.F04.00	1700 standard	Proportional technology	189
5312A.F05.00	1700 standard	Proportional technology	189
800.00	1700 - Miniaturized	Proportional technology	205
DS.10.P.B...	DS	Measuring devices - Pressure switches	206
DS.45.P...	DS	Measuring devices - Pressure switches	207
DS.60.P.I.F1.F.0	DS	Measuring devices - Pressure gauges	208
DS.61.P.I.F1...	DS	Measuring devices - Pressure gauges	209
G1700…	1700 - Miniaturized	Proportional technology	203
G1702…	1700 - Miniaturized	Proportional technology	203
GL171AP…	Airplus	Air service units	82-86
GL171BP…	Airplus	Air service units	82-86
GL171CP…	Airplus	Air service units	82-86
GL172AP…	Airplus	Air service units	82-86
GL172BP…	Airplus	Air service units	82-86
GL172CP…	Airplus	Air service units	82-86
GL173AP…	Airplus	Air service units	82-86
GL173BP…	Airplus	Air service units	82-86
GL173CP…	Airplus	Air service units	82-86
GL174BP…	Airplus	Air service units	82-86
GN171A...	Airplus	Air service units	46-48
GN171AP…	Airplus	Air service units	82-86
GN171B...	Airplus	Air service units	46-48
GN171BP…	Airplus	Air service units	82-86
GN171C...	Airplus	Air service units	48-50
GN171CP…	Airplus	Air service units	82-86
GN172AP…	Airplus	Air service units	82-86
GN172BP…	Airplus	Air service units	82-86
GN172CP…	Airplus	Air service units	82-86
GN173AP…	Airplus	Air service units	82-86
GN173BP…	Airplus	Air service units	82-86
GN173CP…	Airplus	Air service units	82-86
GN174BP…	Airplus	Air service units	82-86
GP171AP…	Airplus	Air service units	82-86
GP171BP…	Airplus	Air service units	82-86
GP171CP…	Airplus	Air service units	82-86
GP172AP…	Airplus	Air service units	82-86
GP172BP…	Airplus	Air service units	82-86
GP172CP…	Airplus	Air service units	82-86
GP173AP…	Airplus	Air service units	82-86
GP173BP…	Airplus	Air service units	82-86
GP173CP…	Airplus	Air service units	82-86
GP174BP…	Airplus	Air service units	82-86
GT171A...	Airplus	Air service units	48-50
GT171AP…	Airplus	Air service units	82-86
GT171B...	Airplus	Air service units	48-50
GT171BP…	Airplus	Air service units	82-86
GT171C...	Airplus	Air service units	48-50
GT171CP…	Airplus	Air service units	82-86
GT172AP…	Airplus	Air service units	82-86
GT172BP…	Airplus	Air service units	82-86
GT172CP…	Airplus	Air service units	82-86
GT173AP…	Airplus	Air service units	82-86
GT173BP…	Airplus	Air service units	82-86
GT173CP…	Airplus	Air service units	82-86
GT174BP…	Airplus	Air service units	82-86
L171ADA...	Airplus	Air service units	10-14
L171AE...	Airplus	Air service units	25-30
L171AF...	Airplus	Air service units	5-9
L171AR...	Airplus	Air service units	31-37
L171AV…	Airplus	Air service units	58-61
L171BDA...	Airplus	Air service units	10-14
L171BE...	Airplus	Air service units	25-30
L171BF...	Airplus	Air service units	5-9
L171BR...	Airplus	Air service units	33-37
L171BV…	Airplus	Air service units	58-61
L171CDA...	Airplus	Air service units	10-14
L171CE...	Airplus	Air service units	25-30
L171CF...	Airplus	Air service units	5-9
L171CR...	Airplus	Air service units	33-37
L171CV…	Airplus	Air service units	58-61
L172ADA...	Airplus	Air service units	10-14
L172AE...	Airplus	Air service units	25-30
L172AF...	Airplus	Air service units	5-9
L172AR...	Airplus	Air service units	33-37
L172AV…	Airplus	Air service units	58-61
L172BDA...	Airplus	Air service units	10-14
L172BE...	Airplus	Air service units	25-30
L172BF...	Airplus	Air service units	5-9
L172BR...	Airplus	Air service units	33-37
L172BV…	Airplus	Air service units	58-61
L172CDA...	Airplus	Air service units	10-14
L172CE...	Airplus	Air service units	25-30
L172CF...	Airplus	Air service units	5-9
L172CR...	Airplus	Air service units	33-37
L172CV…	Airplus	Air service units	58-61
L173ADA...	Airplus	Air service units	10-14
L173ADD...	Airplus	Air service units	20-24
L173AE...	Airplus	Air service units	25-30
L173AF...	Airplus	Air service units	5-9
L173AR...	Airplus	Air service units	33-37

Overall dimensions and technical information are provided solely for informative purposes and may be modified without notice

Coding	Series	Family	Page
L173AV…	Airplus	Air service units	58-61
L173BDA...	Airplus	Air service units	10-14
L173BDD...	Airplus	Air service units	20-24
L173BE...	Airplus	Air service units	25-30
L173BF...	Airplus	Air service units	5-9
L173BR...	Airplus	Air service units	33-37
L173BV…	Airplus	Air service units	58-61
L173CDA...	Airplus	Air service units	10-14
L173CDD...	Airplus	Air service units	20-24
L173CE...	Airplus	Air service units	25-30
L173CF...	Airplus	Air service units	5-9
L173CR...	Airplus	Air service units	33-37
L173CV…	Airplus	Air service units	58-61
L174BDA...	Airplus	Air service units	10-14
L174BDD...	Airplus	Air service units	20-24
L174BE...	Airplus	Air service units	25-30
L174BF...	Airplus	Air service units	5-9
L174BR...	Airplus	Air service units	33-37
L174BV…	Airplus	Air service units	58-61
L174CE...	Airplus	Air service units	25-30
L174CF...	Airplus	Air service units	5-9
L174CR...	Airplus	Air service units	33-37
MDPT40.2R...	P+	Pressure booster	218
N171AAP…	Airplus	Air service units	62-64
N171AB...	Airplus	Air service units	44-47
N171ADA...	Airplus	Air service units	10-14
N171AE...	Airplus	Air service units	25-30
N171AF...	Airplus	Air service units	5-9
N171AL…	Airplus	Air service units	53-57
N171AM...	Airplus	Air service units	44-47
N171AP…	Airplus	Air service units	70-74
N171APA…	Airplus	Air service units	65-66
N171APP…	Airplus	Air service units	67-69
N171AR...	Airplus	Air service units	33-37
N171AV…	Airplus	Air service units	58-61
N171BAP…	Airplus	Air service units	62-64
N171BB...	Airplus	Air service units	44-47
N171BDA...	Airplus	Air service units	10-14
N171BE...	Airplus	Air service units	25-30
N171BF...	Airplus	Air service units	5-9
N171BL…	Airplus	Air service units	53-57
N171BM...	Airplus	Air service units	44-47
N171BP…	Airplus	Air service units	70-74
N171BPA…	Airplus	Air service units	65-66
N171BPP…	Airplus	Air service units	67-69
N171BR...	Airplus	Air service units	33-37
N171BV…	Airplus	Air service units	58-61
N171CAP…	Airplus	Air service units	62-64
N171CB...	Airplus	Air service units	44-47
N171CDA...	Airplus	Air service units	10-14
N171CE...	Airplus	Air service units	25-30
N171CF...	Airplus	Air service units	5-9
N171CL…	Airplus	Air service units	53-57
N171CM...	Airplus	Air service units	44-47
N171CP…	Airplus	Air service units	70-74
N171CPA…	Airplus	Air service units	65-66
N171CPP…	Airplus	Air service units	67-69
N171CR...	Airplus	Air service units	33-37
N171CV…	Airplus	Air service units	58-61

Coding	Series	Family	Page
N171X	Airplus	Air service units	87
N171Y	Airplus	Air service units	87
N171YP	Airplus	Air service units	51
N172AAP…	Airplus	Air service units	62-64
N172ADA...	Airplus	Air service units	10-14
N172AE...	Airplus	Air service units	25-30
N172AF...	Airplus	Air service units	5-9
N172AL…	Airplus	Air service units	53-57
N172AP…	Airplus	Air service units	70-74
N172APA…	Airplus	Air service units	65-66
N172APP…	Airplus	Air service units	67-69
N172AR...	Airplus	Air service units	33-37
N172AV…	Airplus	Air service units	58-61
N172BAP…	Airplus	Air service units	62-64
N172BDA...	Airplus	Air service units	10-14
N172BE...	Airplus	Air service units	25-30
N172BF...	Airplus	Air service units	5-9
N172BL…	Airplus	Air service units	53-57
N172BP…	Airplus	Air service units	70-74
N172BPA…	Airplus	Air service units	65-66
N172BPP…	Airplus	Air service units	67-69
N172BR...	Airplus	Air service units	33-37
N172BV…	Airplus	Air service units	58-61
N172CAP…	Airplus	Air service units	62-64
N172CDA...	Airplus	Air service units	10-14
N172CE...	Airplus	Air service units	25-30
N172CF...	Airplus	Air service units	5-9
N172CL…	Airplus	Air service units	53-57
N172CP…	Airplus	Air service units	70-74
N172CPA…	Airplus	Air service units	65-66
N172CPP…	Airplus	Air service units	67-68
N172CR...	Airplus	Air service units	33-3
N172CV…	Airplus	Air service units	58-60
N172X	Airplus	Air service units	87
N172Y	Airplus	Air service units	87
N173AAP…	Airplus	Air service units	62-64
N173ADA...	Airplus	Air service units	10-14
N173ADBV…	Airplus	Air service units	15-19
N173ADD...	Airplus	Air service units	20-24
N173AE...	Airplus	Air service units	25-30
N173AF...	Airplus	Air service units	5-9
N173AL…	Airplus	Air service units	53-57
N173AP…	Airplus	Air service units	70-74
N173APA…	Airplus	Air service units	65-66
N173APP…	Airplus	Air service units	67-69
N173AR...	Airplus	Air service units	33-37
N173AV…	Airplus	Air service units	58-61
N173BAP…	Airplus	Air service units	62-64
N173BDA...	Airplus	Air service units	10-14
N173BDBV…	Airplus	Air service units	15-19
N173BDCV…	Airplus	Air service units	15-19
N173BDD...	Airplus	Air service units	20-24
N173BE...	Airplus	Air service units	25-30
N173BF...	Airplus	Air service units	5-9
N173BL…	Airplus	Air service units	53-57
N173BP…	Airplus	Air service units	70-74
N173BPA…	Airplus	Air service units	65-66
N173BPP…	Airplus	Air service units	67-69
N173BR...	Airplus	Air service units	33-37

Coding	Series	Family	Page
N173BV…	Airplus	Air service units	58-61
N173BV2S...	Airplus	Air service units	75-81
N173BVS...	Airplus	Air service units	75-81
N173CAP…	Airplus	Air service units	62-64
N173CDA...	Airplus	Air service units	10-14
N173CDBV…	Airplus	Air service units	15-19
N173CDD...	Airplus	Air service units	20-24
N173CE...	Airplus	Air service units	25-30
N173CF...	Airplus	Air service units	5-9
N173CL…	Airplus	Air service units	53-57
N173CP…	Airplus	Air service units	60-74
N173CPA…	Airplus	Air service units	65-66
N173CPP…	Airplus	Air service units	67,69
N173CR...	Airplus	Air service units	33-37
N173CV…	Airplus	Air service units	58-61
N173X	Airplus	Air service units	87
N173Y	Airplus	Air service units	87
N174BAP…	Airplus	Air service units	62-64
N174BDA...	Airplus	Air service units	10-14
N174BDAV…	Airplus	Air service units	15-19
N174BDD...	Airplus	Air service units	20-24
N174BE...	Airplus	Air service units	25-30
N174BF...	Airplus	Air service units	5-9
N174BL…	Airplus	Air service units	53-57
N174BP…	Airplus	Air service units	70-74
N174BPA…	Airplus	Air service units	65-66
N174BPP…	Airplus	Air service units	57-69
N174BR...	Airplus	Air service units	33-37
N174BV…	Airplus	Air service units	58-61
N174CE...	Airplus	Air service units	25-30
N174CF...	Airplus	Air service units	5-9
N174CR...	Airplus	Air service units	33-37
N174X	Airplus	Air service units	87
N174Y	Airplus	Air service units	87
P171AAP…	Airplus	Air service units	62-64
P171ADA...	Airplus	Air service units	10-14
P171AE...	Airplus	Air service units	25-30
P171AF...	Airplus	Air service units	5-9
P171AL…	Airplus	Air service units	53-57
P171AP…	Airplus	Air service units	70-74
P171APA…	Airplus	Air service units	65-66
P171APP…	Airplus	Air service units	67-69
P171AR...	Airplus	Air service units	33-37
P171AV…	Airplus	Air service units	58-61
P171BAP…	Airplus	Air service units	62-64
P171BDA...	Airplus	Air service units	10-14
P171BE...	Airplus	Air service units	25-30
P171BF...	Airplus	Air service units	5-9
P171BL…	Airplus	Air service units	53-57
P171BP…	Airplus	Air service units	70-74
P171BPA…	Airplus	Air service units	65-66
P171BPP…	Airplus	Air service units	67-69
P171BR...	Airplus	Air service units	33-37
P171BV…	Airplus	Air service units	58-61
P171CAP…	Airplus	Air service units	62-64
P171CDA...	Airplus	Air service units	10-14
P171CE...	Airplus	Air service units	25-30
P171CF...	Airplus	Air service units	5-9
P171CL…	Airplus	Air service units	53-57

Coding	Series	Family	Page
P171CP…	Airplus	Air service units	70-74
P171CPA…	Airplus	Air service units	65-66
P171CPP…	Airplus	Air service units	67-68
P171CR...	Airplus	Air service units	33-37
P171CV…	Airplus	Air service units	58-61
P172AAP…	Airplus	Air service units	62-64
P172ADA...	Airplus	Air service units	10-14
P172AE...	Airplus	Air service units	25-30
P172AF...	Airplus	Air service units	5-9
P172AL…	Airplus	Air service units	53-57
P172AP…	Airplus	Air service units	70-74
P172APA…	Airplus	Air service units	65-66
P172APP…	Airplus	Air service units	67-69
P172AR...	Airplus	Air service units	33-37
P172AV…	Airplus	Air service units	58-61
P172BAP…	Airplus	Air service units	62-64
P172BDA...	Airplus	Air service units	10-14
P172BE...	Airplus	Air service units	25-30
P172BF...	Airplus	Air service units	5-9
P172BL…	Airplus	Air service units	53-57
P172BP…	Airplus	Air service units	70-74
P172BPA…	Airplus	Air service units	65-66
P172BPP…	Airplus	Air service units	67-69
P172BR...	Airplus	Air service units	33-37
P172BV…	Airplus	Air service units	58-61
P172CAP…	Airplus	Air service units	62-64
P172CDA...	Airplus	Air service units	10-14
P172CE...	Airplus	Air service units	25-30
P172CF...	Airplus	Air service units	5-9
P172CL…	Airplus	Air service units	53-57
P172CP…	Airplus	Air service units	70-74
P172CPA…	Airplus	Air service units	65-66
P172CPP…	Airplus	Air service units	67-69
P172CR...	Airplus	Air service units	33-37
P172CV…	Airplus	Air service units	58-61
P173AAP…	Airplus	Air service units	62-64
P173ADA...	Airplus	Air service units	10-14
P173ADBV…	Airplus	Air service units	15-19
P173ADD...	Airplus	Air service units	20-24
P173AE...	Airplus	Air service units	25-30
P173AF...	Airplus	Air service units	5-9
P173AL…	Airplus	Air service units	53-57
P173AP…	Airplus	Air service units	70-74
P173APA…	Airplus	Air service units	65-66
P173APP…	Airplus	Air service units	67-69
P173AR...	Airplus	Air service units	33-37
P173AV…	Airplus	Air service units	58-61
P173BAP…	Airplus	Air service units	62-64
P173BDA...	Airplus	Air service units	10-14
P173BDBV…	Airplus	Air service units	15-19
P173BDCV…	Airplus	Air service units	15-19
P173BDD...	Airplus	Air service units	20-24
P173BE...	Airplus	Air service units	25-30
P173BF...	Airplus	Air service units	5-9
P173BL…	Airplus	Air service units	53-57
P173BP…	Airplus	Air service units	70-74
P173BPA…	Airplus	Air service units	65-66
P173BPP…	Airplus	Air service units	67-69
P173BR...	Airplus	Air service units	33-37

Overall dimensions and technical information are provided solely for informative purposes and may be modified without notice

Coding	Series	Family	Page
P173BV…	Airplus	Air service units	58-61
P173CAP…	Airplus	Air service units	62-64
P173CDA...	Airplus	Air service units	10-14
P173CDBV…	Airplus	Air service units	15-19
P173CDD...	Airplus	Air service units	20-24
P173CE...	Airplus	Air service units	25-30
P173CF...	Airplus	Air service units	5-9
P173CL…	Airplus	Air service units	53-57
P173CP…	Airplus	Air service units	70-74
P173CPA…	Airplus	Air service units	65-66
P173CPP…	Airplus	Air service units	67-69
P173CR...	Airplus	Air service units	33-37
P173CV…	Airplus	Air service units	58-61
P174BAP…	Airplus	Air service units	62-64
P174BDA...	Airplus	Air service units	10-14
P174BDAV…	Airplus	Air service units	15-19
P174BDD...	Airplus	Air service units	20-24
P174BE...	Airplus	Air service units	25-30
P174BF...	Airplus	Air service units	5-9
P174BL…	Airplus	Air service units	53-57
P174BP…	Airplus	Air service units	70-74
P174BPA…	Airplus	Air service units	65-66
P174BPP…	Airplus	Air service units	67-69
P174BR...	Airplus	Air service units	33-37
P174BR…P	Airplus	Air service units	39-42
P174BV…	Airplus	Air service units	58-61
P174CE...	Airplus	Air service units	25-30
P174CF...	Airplus	Air service units	5-9
P174CR...	Airplus	Air service units	33-37
P174CR…P	Airplus	Air service units	39-42
SF172AE…	1700 Steel line	Air service units	164
SF172AF…	1700 Steel line	Air service units	162
SF172AR…	1700 Steel line	Air service units	163
SF172BE…	1700 Steel line	Air service units	164
SF172BF…	1700 Steel line	Air service units	162
SF172BR…	1700 Steel line	Air service units	163
SF172CE…	1700 Steel line	Air service units	164
SF172CF…	1700 Steel line	Air service units	162
SF172CR…	1700 Steel line	Air service units	163
SF173AE…	1700 Steel line	Air service units	168
SF173AF…	1700 Steel line	Air service units	166
SF173AR…	1700 Steel line	Air service units	167
SF173BE…	1700 Steel line	Air service units	168
SF173BF…	1700 Steel line	Air service units	166
SF173BR…	1700 Steel line	Air service units	167
SF173DE…	1700 Steel line	Air service units	168
SF173DF…	1700 Steel line	Air service units	166
SF173DR…	1700 Steel line	Air service units	167
SF174AE…	1700 Steel line	Air service units	172
SF174AF…	1700 Steel line	Air service units	170
SF174AR…	1700 Steel line	Air service units	171
SF174BE…	1700 Steel line	Air service units	172
SF174BF…	1700 Steel line	Air service units	170
SF174BR…	1700 Steel line	Air service units	171
SF174DE…	1700 Steel line	Air service units	172
SF174DF…	1700 Steel line	Air service units	170
SF174DR…	1700 Steel line	Air service units	171
SM172AE…	1700 Steel line	Air service units	164
SM172BE…	1700 Steel line	Air service units	164

Coding	Series	Family	Page
SM172CE…	1700 Steel line	Air service units	164
SM173AE…	1700 Steel line	Air service units	168
SM173BE…	1700 Steel line	Air service units	168
SM173DE…	1700 Steel line	Air service units	168
SM174AE…	1700 Steel line	Air service units	172
SM174BE…	1700 Steel line	Air service units	172
SM174DE…	1700 Steel line	Air service units	172
SS17070AA	1700 Steel line	Air service units	165
SS17070AA	1700 Steel line	Air service units	169
SS17070AA	1700 Steel line	Air service units	173
SS17070AB	1700 Steel line	Air service units	165
SS17070AB	1700 Steel line	Air service units	169
SS17070AB	1700 Steel line	Air service units	173
SS17250	1700 Steel line	Air service units	165
SS172AE…	1700 Steel line	Air service units	164
SS172AF…	1700 Steel line	Air service units	162
SS172AR…	1700 Steel line	Air service units	163
SS172BE…	1700 Steel line	Air service units	164
SS172BF…	1700 Steel line	Air service units	162
SS172BR…	1700 Steel line	Air service units	163
SS172CE…	1700 Steel line	Air service units	164
SS172CF…	1700 Steel line	Air service units	162
SS172CR…	1700 Steel line	Air service units	163
SS17350	1700 Steel line	Air service units	169
SS173AE…	1700 Steel line	Air service units	168
SS173AF…	1700 Steel line	Air service units	166
SS173AR…	1700 Steel line	Air service units	167
SS173BE…	1700 Steel line	Air service units	168
SS173BF…	1700 Steel line	Air service units	166
SS173BR…	1700 Steel line	Air service units	167
SS173DE…	1700 Steel line	Air service units	168
SS173DF…	1700 Steel line	Air service units	166
SS173DR…	1700 Steel line	Air service units	167
SS17450	1700 Steel line	Air service units	173
SS174AE…	1700 Steel line	Air service units	172
SS174AF…	1700 Steel line	Air service units	170
SS174AR…	1700 Steel line	Air service units	171
SS174BE…	1700 Steel line	Air service units	172
SS174BF…	1700 Steel line	Air service units	170
SS174BR…	1700 Steel line	Air service units	171
SS174DE…	1700 Steel line	Air service units	172
SS174DF…	1700 Steel line	Air service units	170
SS174DR…	1700 Steel line	Air service units	171
T171AAP…	Airplus	Air service units	62-64
T171AB...	Airplus	Air service units	44-47
T171ADA...	Airplus	Air service units	10-14
T171AE...	Airplus	Air service units	25-30
T171AF...	Airplus	Air service units	5-9
T171AL…	Airplus	Air service units	53-57
T171AM...	Airplus	Air service units	44-47
T171AP…	Airplus	Air service units	70-74
T171APA…	Airplus	Air service units	65-66
T171APP…	Airplus	Air service units	67-69
T171AR...	Airplus	Air service units	33-37
T171AV…	Airplus	Air service units	58-61
T171BAP…	Airplus	Air service units	62-64
T171BB...	Airplus	Air service units	44-47
T171BDA...	Airplus	Air service units	10-14
T171BE...	Airplus	Air service units	25-30

Coding	Series	Family	Page
T171BF...	Airplus	Air service units	5-9
T171BL…	Airplus	Air service units	53-57
T171BM...	Airplus	Air service units	44-47
T171BP…	Airplus	Air service units	70-74
T171BPA…	Airplus	Air service units	65-66
T171BPP…	Airplus	Air service units	67-69
T171BR...	Airplus	Air service units	33-37
T171BV…	Airplus	Air service units	58-61
T171CAP…	Airplus	Air service units	62-64
T171CB...	Airplus	Air service units	44-47
T171CDA...	Airplus	Air service units	10-14
T171CE...	Airplus	Air service units	25-30
T171CF...	Airplus	Air service units	5-9
T171CL…	Airplus	Air service units	53-57
T171CM...	Airplus	Air service units	44-47
T171CP…	Airplus	Air service units	70-74
T171CPA…	Airplus	Air service units	65-66
T171CPP…	Airplus	Air service units	67-69
T171CR...	Airplus	Air service units	33-37
T171CV…	Airplus	Air service units	58-61
T171X	Airplus	Air service units	51
T171X	Airplus	Air service units	87
T171Y	Airplus	Air service units	51
T171Y	Airplus	Air service units	87
T17250	1700	Air service units	158
T17250	Airplus	Air service units	32; 38; 52
T172AAP…	Airplus	Air service units	62-64
T172ADA...	Airplus	Air service units	10-14
T172AE...	Airplus	Air service units	25-30
T172AF...	Airplus	Air service units	5-9
T172AL…	Airplus	Air service units	53-57
T172AP…	Airplus	Air service units	70-74
T172APA…	Airplus	Air service units	65-66
T172APP…	Airplus	Air service units	67-69
T172AR...	Airplus	Air service units	33-37
T172AV…	Airplus	Air service units	58-61
T172BAP…	Airplus	Air service units	62-64
T172BDA...	Airplus	Air service units	10-14
T172BE...	Airplus	Air service units	25-30
T172BF...	Airplus	Air service units	5-9
T172BL…	Airplus	Air service units	53-57
T172BP…	Airplus	Air service units	70-74
T172BPA…	Airplus	Air service units	65-66
T172BPP…	Airplus	Air service units	67-69
T172BR...	Airplus	Air service units	33-37
T172BV…	Airplus	Air service units	58-61
T172CAP…	Airplus	Air service units	62-64
T172CDA...	Airplus	Air service units	10-14
T172CE...	Airplus	Air service units	25-30
T172CF...	Airplus	Air service units	5-9
T172CL…	Airplus	Air service units	53-57
T172CP…	Airplus	Air service units	70-74
T172CPA…	Airplus	Air service units	65-66
T172CPP…	Airplus	Air service units	67-69
T172CR...	Airplus	Air service units	33-37
T172CV…	Airplus	Air service units	58-61
T172X	Airplus	Air service units	87
T172Y	Airplus	Air service units	87
T173AAP…	Airplus	Air service units	62-64

Coding	Series	Family	Page
T173ADA...	Airplus	Air service units	10-14
T173ADBV…	Airplus	Air service units	15-19
T173ADD...	Airplus	Air service units	20-24
T173AE...	Airplus	Air service units	25-30
T173AF...	Airplus	Air service units	5-9
T173AL…	Airplus	Air service units	53-57
T173AP…	Airplus	Air service units	70-74
T173APA…	Airplus	Air service units	65-66
T173APP…	Airplus	Air service units	67-69
T173AR...	Airplus	Air service units	33-37
T173AV…	Airplus	Air service units	58-61
T173BAP…	Airplus	Air service units	62-64
T173BDA...	Airplus	Air service units	10-14
T173BDBV…	Airplus	Air service units	15-19
T173BDCV…	Airplus	Air service units	15-19
T173BDD...	Airplus	Air service units	20-24
T173BE...	Airplus	Air service units	25-30
T173BF...	Airplus	Air service units	5-9
T173BL…	Airplus	Air service units	53-57
T173BP…	Airplus	Air service units	70-74
T173BPA…	Airplus	Air service units	65-66
T173BPP…	Airplus	Air service units	67-69
T173BR...	Airplus	Air service units	33-37
T173BV…	Airplus	Air service units	58-61
T173CAP…	Airplus	Air service units	62-64
T173CDA...	Airplus	Air service units	10-14
T173CDBV…	Airplus	Air service units	15-19
T173CDD...	Airplus	Air service units	20-24
T173CE...	Airplus	Air service units	25-30
T173CF...	Airplus	Air service units	5-9
T173CL…	Airplus	Air service units	53-57
T173CP…	Airplus	Air service units	60-74
T173CPA…	Airplus	Air service units	65-66
T173CPP…	Airplus	Air service units	67-69
T173CR...	Airplus	Air service units	33-37
T173CV…	Airplus	Air service units	58-61
T173X	Airplus	Air service units	87
T173Y	Airplus	Air service units	87
T1740.01	P+	Pressure booster	219
T174BAP…	Airplus	Air service units	62-64
T174BDA...	Airplus	Air service units	10-14
T174BDAV…	Airplus	Air service units	15-19
T174BDD...	Airplus	Air service units	20-24
T174BE...	Airplus	Air service units	25-30
T174BF...	Airplus	Air service units	5-9
T174BL…	Airplus	Air service units	53-57
T174BP…	Airplus	Air service units	70-74
T174BPA…	Airplus	Air service units	65-66
T174BPP…	Airplus	Air service units	67-69
T174BR...	Airplus	Air service units	33-37
T174BV…	Airplus	Air service units	58-61
T174CE...	Airplus	Air service units	25-30
T174CF...	Airplus	Air service units	5-9
T174CR...	Airplus	Air service units	33-37
T174X	Airplus	Air service units	87
T174Y	Airplus	Air service units	87

Overall dimensions and technical information are provided solely for informative purposes and may be modified without notice

Pneumatic actuation

Coding	Series	Family	Page
1200.20.04/1	1500 ECOMPACT - Accessories	ISO 21287 Compact cylinders	94
1200.20.32.F	1500 ECOMPACT - Accessories	ISO 21287 Compact cylinders	93
1200…	1200 Fixing device	ISO 6432 Microbore cylinders	26-27
1200…X	1200 Steel line Accessories	ISO 6432 Microbore cylinders	28-29
1213…	1200 Special performance	Threaded body microbore	103-104
1230…	1200 "TECNO-MIR"	ISO 6432 Microbore cylinders	10-11
1231…	1200 "TECNO-MIR"	ISO 6432 Microbore cylinders	10-11
1232…	1200 "TECNO-MIR"	ISO 6432 Microbore cylinders	10-11
1260…	1200 Threaded end caps	ISO 6432 Microbore cylinders	1-3
1260…	1260	Piston rod lock	271-272
1260…	1260	Linear control units	273-274
1260…F	1200 Steel line Accessories	ISO 6432 Microbore cylinders	25
1261…	1200 Threaded end caps	ISO 6432 Microbore cylinders	1-3
1271…	1200 Threaded end caps	ISO 6432 Microbore cylinders	1-3
1272…	1200 Threaded end caps	ISO 6432 Microbore cylinders	1-3
1273…	1200 Threaded end caps	ISO 6432 Microbore cylinders	1-3
1274…	1200 Threaded end caps	ISO 6432 Microbore cylinders	1-3
1280…	1200 Rolled end caps "MIR"	ISO 6432 Microbore cylinders	4-6
1280…X	1200 Rolled end caps "MIR-INOX"	ISO 6432 Microbore cylinders	8-9
1281…	1200 Rolled end caps "MIR"	ISO 6432 Microbore cylinders	4-6
1282…	1200 Rolled end caps "MIR"	ISO 6432 Microbore cylinders	4-6
1282…X	1200 Rolled end caps "MIR-INOX"	ISO 6432 Microbore cylinders	8-9
1291…	1200 Rolled end caps "MIR"	ISO 6432 Microbore cylinders	4-6
1292…	1200 Rolled end caps "MIR"	ISO 6432 Microbore cylinders	4-6
1293…	1200 Rolled end caps "MIR"	ISO 6432 Microbore cylinders	4-6
1294…	1200 Rolled end caps "MIR"	ISO 6432 Microbore cylinders	4-6
12X…	1200 Steel line	ISO 6432 Microbore cylinders	12-18
12X…	1200 Steel line Accessories	ISO 6432 Microbore cylinders	21-24
12XF…	1200 Steel line	ISO 6432 Microbore cylinders	20
1300…F	13… - Accessories	CNOMO-CETOP-ISO cylinders	38-39
1302…F	1315 - Accessories	ISO 15552 cylinders	70
1303...	1303	CNOMO-CETOP-ISO cylinders	30-32
1303...F	13… - Accessories	CNOMO-CETOP-ISO cylinders	34-39
1304…	1304	CNOMO-CETOP-ISO cylinders	30-32
1304…F	13… - Accessories	CNOMO-CETOP-ISO cylinders	34-39
1305…	1305	CNOMO-CETOP-ISO cylinders	30-32
1306.15	13… - Accessories	CNOMO-CETOP-ISO cylinders	33
1306.A	13… - Accessories	CNOMO-CETOP-ISO cylinders	33
1306.B	13… - Accessories	CNOMO-CETOP-ISO cylinders	33
1306.C	13… - Accessories	CNOMO-CETOP-ISO cylinders	33
1306.D	1315 - Accessories	ISO 15552 cylinders	70
1306.E	1315 - Accessories	ISO 15552 cylinders	70
1306…	1306	CNOMO-CETOP-ISO cylinders	30-32
1307…	1307	CNOMO-CETOP-ISO cylinders	30-32
1308…	1308	CNOMO-CETOP-ISO cylinders	30-32
1315…	1315 Round Tube	ISO 15552 cylinders	69-70
1319…	1319	ISO 15552 cylinders	40-42
1320.15	1330-1331-1332-1333-Accessories	Rotary actuators	216
1320.15	1330-1331-1332-1333-Accessories	Rotary actuators	216
1320.16	1330-1331-1332-1333-Accessories	Rotary actuators	216
1320.17	1330-1331-1332-1333-Accessories	Rotary actuators	216
1320.18	1330-1331-1332-1333-Accessories	Rotary actuators	216
1320.19	1330-1331-1332-1333-Accessories	Rotary actuators	216
1320.20	1330-1331-1332-1333-Accessories	Rotary actuators	216
1320.21	13… - Accessories	CNOMO-CETOP-ISO cylinders	33
1320.21	1330-1331-1332-1333-Accessories	Rotary actuators	216
1320.22	13… - Accessories	CNOMO-CETOP-ISO cylinders	33
1320.22	1330-1331-1332-1333-Accessories	Rotary actuators	216
1320.23	13…- Accessories	ISO 15552 cylinders	49
1320.24	13…- Accessories	ISO 15552 cylinders	49
1320.A…	1330-1331-1332-1333-Accessories	Rotary actuators	216
1320.B…	1330-1331-1332-1333-Accessories	Rotary actuators	216
1320.C…	1330-1331-1332-1333-Accessories	Rotary actuators	216
1320.D…	1330-1331-1332-1333-Accessories	Rotary actuators	216
1320.E…	1330-1331-1332-1333-Accessories	Rotary actuators	216
1320.F…	1330-1331-1332-1333-Accessories	Rotary actuators	216
1320…	1320	ISO 15552 cylinders	40-42
1320…	1320 - Accessories	ISO 15552 cylinders	45
1320…	1320	Piston rod lock	269-270
1320…	1320	Linear control units	269-271
1320…F	1300 - Accessories	ISO 15552 cylinders	57-67
1320…F	1500 ECOMPACT - Accessories	ISO 21287 Compact cylinders	93-102
1320…F	1373 - ECOFLAT - Accessories	Flat cylinders	113-114
1320…F	1500 - Ecompact-S - Accessories	Compact cylinders	147
1321…	1321	ISO 15552 cylinders	40-42
1325…	1325 - Twin rod cylinders	Non rotating cylinders	105-106
1325…F	1325 - Twin rod cylinders	Non rotating cylinders	107
1326…	1325 - Twin rod cylinders	Non rotating cylinders	105-106
1330…	1330	Rotary actuators	213-215
1331…	1331	Rotary actuators	213-215
1332…	1332	Rotary actuators	213-215
1333…	1333	Rotary actuators	213-215
1345…	1325 - Twin rod cylinders	Non rotating cylinders	105-106
1346…	1325 - Twin rod cylinders	Non rotating cylinders	105-106
1348…	1348	ISO 15552 cylinders	43-44
1349…	1349	ISO 15552 cylinders	43-44
1350…	1350	ISO 15552 cylinders	43-44
1370…	1370 - ECOFLAT	Flat cylinders	108-110
1370…F	1373 - ECOFLAT - Accessories	Flat cylinders	111-112
1371…	1370 - ECOFLAT	Flat cylinders	108-110
1372…	1372 - ECOFLAT	Flat cylinders	108-110
1373…	1373 - ECOFLAT	Flat cylinders	108-110
1380.01F	1500 - EUROPE - Fixing device	Compact cylinders	143
1380…F	1300 - Accessories	ISO 15552 cylinders	57-67
1380…F	1500 ECOMPACT - Accessories	ISO 21287 Compact cylinders	95-101
1380…F	1500 - Ecompact-S - Accessories	Compact cylinders	147

Coding	Series	Family	Page
1320.16	1330-1331-1332-1333-Accessories	Rotary actuators	216
1320.17	1330-1331-1332-1333-Accessories	Rotary actuators	216
1320.18	1330-1331-1332-1333-Accessories	Rotary actuators	216
1320.19	1330-1331-1332-1333-Accessories	Rotary actuators	216
1320.20	1330-1331-1332-1333-Accessories	Rotary actuators	216
1320.21	13… - Accessories	CNOMO-CETOP-ISO cylinders	33
1320.21	1330-1331-1332-1333-Accessories	Rotary actuators	216
1320.22	13… - Accessories	CNOMO-CETOP-ISO cylinders	33
1320.22	1330-1331-1332-1333-Accessories	Rotary actuators	216
1320.23	13…- Accessories	ISO 15552 cylinders	49
1320.24	13…- Accessories	ISO 15552 cylinders	49
1320.A…	1330-1331-1332-1333-Accessories	Rotary actuators	216
1320.B…	1330-1331-1332-1333-Accessories	Rotary actuators	216
1320.C…	1330-1331-1332-1333-Accessories	Rotary actuators	216
1320.D…	1330-1331-1332-1333-Accessories	Rotary actuators	216
1320.E…	1330-1331-1332-1333-Accessories	Rotary actuators	216
1320.F…	1330-1331-1332-1333-Accessories	Rotary actuators	216
1320…	1320	ISO 15552 cylinders	40-42
1320…	1320 - Accessories	ISO 15552 cylinders	45
1320…	1320	Piston rod lock	269-270
1320…	1320	Linear control units	269-271
1320…F	1300 - Accessories	ISO 15552 cylinders	57-67
1320…F	1500 ECOMPACT - Accessories	ISO 21287 Compact cylinders	93-102
1320…F	1373 - ECOFLAT - Accessories	Flat cylinders	113-114
1320…F	1500 - Ecompact-S - Accessories	Compact cylinders	147
1321…	1321	ISO 15552 cylinders	40-42
1325…	1325 - Twin rod cylinders	Non rotating cylinders	105-106
1325…F	1325 - Twin rod cylinders	Non rotating cylinders	107
1326…	1325 - Twin rod cylinders	Non rotating cylinders	105-106
1330…	1330	Rotary actuators	213-215
1331…	1331	Rotary actuators	213-215
1332…	1332	Rotary actuators	213-215
1333…	1333	Rotary actuators	213-215
1345…	1325 - Twin rod cylinders	Non rotating cylinders	105-106
1346…	1325 - Twin rod cylinders	Non rotating cylinders	105-106
1348…	1348	ISO 15552 cylinders	43-44
1349…	1349	ISO 15552 cylinders	43-44
1350…	1350	ISO 15552 cylinders	43-44
1370…	1370 - ECOFLAT	Flat cylinders	108-110
1370…F	1373 - ECOFLAT - Accessories	Flat cylinders	111-112
1371…	1370 - ECOFLAT	Flat cylinders	108-110
1372…	1372 - ECOFLAT	Flat cylinders	108-110
1373…	1373 - ECOFLAT	Flat cylinders	108-110
1380.01F	1500 - EUROPE - Fixing device	Compact cylinders	143
1380…F	1300 - Accessories	ISO 15552 cylinders	57-67
1380…F	1500 ECOMPACT - Accessories	ISO 21287 Compact cylinders	95-101
1380…F	1500 - Ecompact-S - Accessories	Compact cylinders	147
1386.15	13…- Accessories	ISO 15552 cylinders	49
1386…	1386	ISO 15552 cylinders	46-48
1386…F	1300 - Accessories	ISO 15552 cylinders	64
1387…	1387	ISO 15552 cylinders	46-48
1388…	1388	ISO 15552 cylinders	46-48
1390…	1390 Ecolight	ISO 15552 cylinders	50-53
1390…	1390 - Accessories	ISO 15552 cylinders	55
1390…F	1300 - Accessories	ISO 15552 cylinders	57-67
1390…F	1300 - Accessories	ISO 15552 cylinders	65
1390…F	1500 - Ecompact-S - Accessories	Compact cylinders	147
1391…	1391 Ecolight	ISO 15552 cylinders	50-53
1392…	1392 Ecolight	ISO 15552 cylinders	50-53
1393.A	AISI 316 - Accessories	ISO 15552 cylinders	74
1393.B	AISI 316 - Accessories	ISO 15552 cylinders	74
1393.C	AISI 316 - Accessories	ISO 15552 cylinders	74
1393…	AISI 316 - Steel Line	ISO 15552 cylinders	71-72
1393…F	AISI 316 - Accessories	ISO 15552 cylinders	75-80
1394…	AISI 316 - Steel Line	ISO 15552 cylinders	71-72
1396…	1396	ISO 15552 cylinders	46-48
1397…	1397	ISO 15552 cylinders	46-48
1398…	1398	ISO 15552 cylinders	46-48
1400.40…	1400	Hydraulic speed control cylinders	115-121; 126
1400.63…	1400	Hydraulic speed control cylinders	122-126
1450…	1450	ISO 15552 Hydro-Pneumatic cylinders	81-86
1463…	1463	ISO 15552 Hydro-Pneumatic cylinders	81-86
1500.20.F	1500 ECOMPACT - Accessories	ISO 21287 Compact cylinders	94
1500.AC	SA	Standard series	255
1500.DC	SA	Standard series	255
1500.H…	SA	Standard series	259
1500.U	SA	Standard series	255
1500.U/1	SA	Standard series	255
1500…	1500 Sensors	ISO 15552 cylinders	54
1500…F	1500 - Short stroke - Accessories	Compact cylinders	134-135
1500…F	1500 - EUROPE - Fixing device	Compact cylinders	140-143
1501…	1500 - Short stroke	Compact cylinders	127-128
1501…AR.	1500 - Short stroke - Accessories	Compact cylinders	133
1502…	1500 - Short stroke	Compact cylinders	129
1503…	1500 - Short stroke	Compact cylinders	130
1504…	1500 - Short stroke	Compact cylinders	131
1511…	1500 - Short stroke	Compact cylinders	128
1511…AR.	1500 - Short stroke - Accessories	Compact cylinders	133
1512…	1500 - Short stroke	Compact cylinders	129
1513…	1500 - Short stroke	Compact cylinders	130
1514…	1500 - Short stroke	Compact cylinders	131
1515…	1500 - Short stroke	Compact cylinders	132
1516…	1500 - Short stroke	Compact cylinders	132
1517…	1500 - Short stroke	Compact cylinders	132
154…	1500 ECOMPACT	ISO 21287 Compact cylinders	87-92
154…	1500 - Ecompact-S	Compact cylinders	144-146
1540…1F	6400 - Rotary actuators -Accessories	Rotary actuators	224
1540…F	1500 ECOMPACT - Accessories	ISO 21287 Compact cylinders	95
155…	1500 ECOMPACT	ISO 21287 Compact cylinders	87-92
155…	1500 - Ecompact-S	Compact cylinders	144-146
156…	1500 - EUROPE	Compact cylinders	136-138
157…	1500 - EUROPE	Compact cylinders	136-138
158…	1500 - EUROPE	Compact cylinders	136-138

Overall dimensions and technical information are provided solely for informative purposes and may be modified without notice

Coding	Series	Family	Page
1580.H…	SR	Miniaturised series	263
1580.U…	SR	Miniaturised series	263
1580…	1580 Sensors	ISO 15552 cylinders	54; 74
1580…F	1500 - EUROPE - Fixing device	Compact cylinders	140-143
1581.HAP	ST Sensors	Rotary actuators	231
1581.HAP	ST	Miniaturised series	266
1581.U	ST Sensors	Rotary actuators	231
1581.U	ST	Miniaturised series	266
1583.DC	ST Sensors	Rotary actuators	231-232
1583.DC	ST	Miniaturised series	267
1583.HAP	ST Sensors	Rotary actuators	231-232
1583.HAP	ST	Miniaturised series	267
159…	1500 - EUROPE	Compact cylinders	136-138
1590.H…	SQ	Miniaturised series	265
1590.U…	SQ	Miniaturised series	265
1590…	Sensori 1590	Rodless cylinders	209
1595.H…	SU	Miniaturised series	264
1600.16…F	1605 - Accessories	Rodless cylinders	210-211
1600.A	1605 - Accessories	Rodless cylinders	203
1600.AC	SA	Standard series	255
1600.B	1605 - Accessories	Rodless cylinders	203
1600.DC	SA	Standard series	255
1600.H…	SA	Standard series	259
1600.U	SA	Standard series	255
1600.U/1	SA	Standard series	255
1600…F	1605 - Accessories	Rodless cylinders	204-206
1601…	1601	Cable cylinders	212
1605.16…	1605 - Ø16	Rodless cylinders	207-209
1605…	1605	Rodless cylinders	196-202
6100…	6100	Guided compact cylinders	153-160
6101…	6101	Guided compact cylinders	161-164
6110…	6110	Guided compact cylinders	165-167
6200…	6200 - Twin-rod Slide units	Slide units	178-183
6210…	6210 Through rod twin-rod Slide units	Slide units	184-188
6301…	6301 - Angular grippers	Pneumatic grippers	235-238
6302…	6302 - Angular grippers	Pneumatic grippers	239-241
6302…	6302 - Angular grippers	Pneumatic grippers	242-244
6310…	6310 - Parallel style grippers	Pneumatic grippers	245-247
6311…	6311 - Parallel style grippers	Pneumatic grippers	248-250
6312…	6312 - 3 fingers parallel style	Pneumatic grippers	251-253
6400…	6400 - Rotary actuators	Rotary actuators	217-220
6411…	6400 - Rotary actuators	Rotary actuators	221-223
6420…	6420 - Vane type rotary actuators	Rotary actuators	225-231
6500…	6500	Multimount cylinders	149-150
6600…	6600	Slide cylinders	168-175
6600…S…	6600 - Accessories	Slide cylinders	177
6600…VR	6600 - Accessories	Slide cylinders	177
6700…	6700 - Slide units	Slide units	189-195
6900…	6900	Dampers	273

Coding	Series	Family	Page
C1…	SA - Cables	Standard series	256-257
C2…	SA - Cables	Standard series	256-257
C3…	SA - Cables	Standard series	256-257
CH…	SA - Cables	Standard series	257
HS…	HS Sensors	ISO 15552 cylinders	54
HS…	SA	Standard series	260-261
LHS.P	SQ	Miniaturised series	265
LHS…	LHS Sensors	Rodless cylinders	209
LRS.U...	SQ	Miniaturised series	265
LRS…	LRS Sensors	Rodless cylinders	209
MC1	SR	Miniaturised series	263; 265; 266
MC2	SR	Miniaturised series	263; 265; 267
MC3	SR	Miniaturised series	263; 265; 268
MCH…	SA - SR - SQ - ST - Cables	Standard series	256-257; 260; 263; 265; 266; 267
MHS…	MHS Sensors	ISO 15552 cylinders	54; 74
MHS…	SR	Miniaturised series	263
MRS…	MRS Sensors	ISO 15552 cylinders	54; 74
MRS…	SR	Miniaturised series	263
RS…	RS Sensors	ISO 15552 cylinders	54
RS…	SA	Standard series	256-257
SHS…	SA	Standard series	260-261
SRS…	SA	Standard series	256-257
THR.P	ST Sensors	Rotary actuators	231-232
THR.P	ST	Miniaturised series	267
THS.P	ST Sensors	Rotary actuators	231
TRS.U	ST Sensors	Rotary actuators	231
TRS.U	ST	Miniaturised series	266

HEADQUARTERS

PNEUMAX

PNEUMAX S.P.A.

Via Cascina Barbellina, 10
24050 Lurano (BG) - Italia
Tel. 035/4192777
Fax 035/4192740 - 035/4192741
info@pneumaxspa.com
www.pneumaxspa.com

WORLDWIDE NETWORK

EUROPE

ALBANIA
Industrial Air Solution shpk
Rruga industriale Tirane Vore, km 11,
1032 Vore Tirane
Tel. +355 69 40 80 349
info@iasolution.al
www.iasolution.al

AUSTRIA AND SWITZERLAND
Managed by Pneumax GmbH (Germany)

BELGIUM
Pneuvano BV
Koralenhoeve 4
2160, Wommelgem
Tel. +32 3 355 32 20
info@pneuvano.com
www.pneuvano.com

BULGARIA
Ulmer DM OOD
Adam Mizkevich Str. 4a, 1360, Sofia
Tel. +359 (2) 9259951
office@ulmer.bg
www.ulmer.bg

CYPRUS
G C V Spare Parts & Services Ltd
Industrial Area, Anatoniko 8086
P.O. Box 62731, Paphos
Tel. +357 26812444
gcv.cy@cytanet.com.cy
www.gcv-parts.com

CROATIA
ProElektronika d.o.o. - Zagabria
Stefanovecka 10, 10040, Zagabria
Tel. +385 (0)1 5588 988
info@proelektronika.hr
www.proelektronika.hr

ESTONIA
Alas-Kuul AS
Loomäe tee 1, Lehmja küla
75306, Rae vald Harjumaa
Tel. +372 6593 218
info@alas-kuul.ee
www.alas-kuul.ee

FRANCE
Pneumax France SAS
Z.I. NORD PARADIES 7
Rue de Waldkirch - BP 42
67601, Selestat CEDEX
Tel. +33 (3) 88580450
commercial@pneumax-france.fr
www.pneumax-france.fr

GERMANY
Pneumax GmbH
Tantalstraße 4
63571, Gelnhausen
Tel. +49 (0) 6051 9777 0
info@pneumax-gmbh.de
www.pneumax.de

GREECE
Hydropneumatic Hellas S.A.
69, Spirou Patsi Str. T.K., 118 55, Atene
Tel. +30 (210) 3474181-2-3
info@mitsis.com.gr
www.mitsis.com.gr

UNITED KINGDOM
Pneumax UK Ltd.
110 Vista Park,
Mauretania Road
SO16 0YS, Nursling
Tel. +44 2380 740412
sales@pneumax.co.uk
www.pneumax.co.uk

ICELAND
Barki E.H.F. Ltd
Nybylavegi 22, 200, Kópavogur
Tel. +354 554 6499
barkiea@islandia.is

LITHUANIA
UAB "Domingos prekyba"
Savanoriu PR 187-4 Korp, 2053, Vilnius
Tel. +370 5 2322231
info@dominga.lt
www.dominga.lt

NORTHERN MACEDONIA
DIL KOM DOOEL
St. Joska Jordanoski No 657500, Prilep
Tel. +389 78244177
export.dilkom@gmail.com
www.dilkom.mk

MALTA
iAutomate Limited
San Bernard, Marsa MRS 1332, Malta
Tel. +356 2786 3996
matthew@iautomate.mt
www.iautomate.mt

NETHERLANDS
Pneu/Tec B.V.
Dirk Storklaan 75, 2132 PX, Hoofddorp
Tel. +31 (0) 235699090
sales@pneutec.nl
www.pneutec.nl

POLAND
Rectus Polska SP. Z.O.O.
Gumna 96, 43-426, Debowiec
Tel. +48 (33) 857 98 00
pneumax@pneumax.pl
www.pneumax.pl

PORTUGAL
Portugal Pneumax Lda
Complexo Industrial da
Granja Fracção H-Casarias
2625-607, Vialonga
Tel. +351 (219) 737390
geral@pneumax.pt
www.pneumax.pt

CZECH REPUBLIC
Pneumax Automation s.r.o.
U Panského mlýna 240/9,
747 06, Opava
Tel. +420 553 760 953
pneumax@pneumaxsro.cz
www.pneumaxsro.cz

ROMANIA
Gica Import Export
Zona Industriala de Vest str. II nr. 5,
310491, Arad
Tel. +40 257 259816
comercial@gica.ro
www.gica.ro

RUSSIA / CIS
Pneumax Ltd. Moscow
Kommunalniy proezd, 30
141400, Khimki
Tel. +7 495 7393999
mail@pneumax.ru
www.pneumax.ru

DENMARK - FINLAND
NORWAY - SWEDEN
(SCANDINAVIA)
Pneumax Scandinavia AB
Strandvägen 101, SE-234 31, Lomma
Tel. +46 (40) 617 40 40
info@pneumax.se
www.pneumax.se

SERBIA
Hidraulika DOO
Cirila i Metodija 15, 15000, Šabac
Tel. +381 15 360 090
info@hidraulika.rs
www.hidraulika.rs

SLOVENIA
Hidravlika d.o.o.
Medlog, 16, 3000, Celje
Tel. +386 (3) 5453610
info@hidravlika.si
www.hidravlika.si

SPAIN
Pneumax S.A.
Olaso Kalea, 54, 20870, Elgoibar
Tel. +34 943 744144
pneumax@pneumax.es
www.pneumax.es

Pneumax Catalunya S.A.
C/Riera de Vallvidrera,
Parc. 2N. 1 P.I. Riera del Molì
8750, Molins de Rei
Tel. +34 (93) 680 25 30
pneumax@pneumaxcat.com
www.pneumax.es

TURKEY
Eteknik Otomasyon Tic. Ltd. Sti
Perpa Ticaret Merkezi B Blok Kat:11 No:1636 Ok-meydanı Sisli (Istanbul)
Tel. +90 212 320 81 10
recepcakar@eteknik.com
www.eteknik.com

UKRAINE
UKRTECHTRONIC LLC.
st. Nyzhnoyurkivska, 9, 04080, Kiev
Tel. +38 044 500 98 48
sales@techtronic.com.ua
www.techtronic.com.ua

HUNGARY
Szele-Tech Bt.
Gvadányi u. 33-39. I. em. 108., 1141, Budapest
Tel. +36 1 401 0023
info@szele-tech.hu
www.szele-tech.hu

NORTH AMERICA

CANADA
Manufacture Scorpion Inc.
561, rue Edouard, J2G 3Z5, Granby
Tel. +1 (450) 378-3595
contact@mscorpion.com
www.manufacturescorpion.com

USA
Pneumax Automation LLC
128 Durkee Lane, Dallas
NC 28034 - USA
Tel.: +1 704 215 6991
Fax: +1 888 613 6529
info@pneumax.us
www.pneumax.us

MEXICO
Pneumatecnia S.A. DE C.V. - Zapopan
Calle Volcán Popocatépetl 1844, Colli Urbano
45070, Zapopan, Jalisco
Tel. +52 33 31255978
pneumatecnia@yahoo.com.mx
www.pneumatecnia.com.mx

CENTRAL AMERICA

COSTA RICA
PYASA Proyectos y Automatizacion S.A.
Oficentro Santa María Oficina 1A,
50 metros Norte
Del Hampton Inn & Suites, Alajuela
Tel. +506 2441-5129 / 2441-5130
info@pyasa.net
https://pyasa.net

EL SALVADOR
Tecni Equipos S.A. de C.V.
Av. Sierra Nevada, 704 Edificio CC, 2
Colonia Miramonte, San Salvador
Tel. (503) 2260-8293
Tel. (503) 2261-1497
tecniequipos.com.sv

GUATEMALA
PYASA Proyectos y Automatización S.A.
Avenida 3era 13-30 El Rosario Ofibodegas
San Javier zona 3 de Mixco bodega 7
Città del Guatemala
Tel. +502 24911414
info@pyasa.net
https://pyasa.net

NICARAGUA
PYASA Proyectos y Automatización S.A.
Plaza Maranhao, local 7, Reparto Los Robles, o bien, del Hotel Seminole 100 m sur,
1/2 m al oeste
Managua
Tel. +505-2255-6840
info@pyasa.net
https://pyasa.net

SOUTH AMERICA

ARGENTINA
Figli Daniele S.r.l.
PTE PERON 3234
San Justo - Pcia De Bs As.
Tel. +54 11 4484-2074
Fax +54 11 4651-6721
bruno@dinautomacion.com.ar

BRAZIL
Pneumax Brasil
Rua Apucarana 211
8301050, São José dos Pinhais
Tel. +55 41 33987262
diretoria@pneumaxbr.com.br
www.pneumaxbr.com.br

CHILE
Schultz Automatizacion e Ingenieria Ltda
El Retiro 1247 - Enea - Pudahuel, Santiago
Tel. +56 (2) 4951400
jschultz@schultzautomatizacion.cl
www.schultzautomatizacion.cl

COLOMBIA
Soluciones Neumaticas S.A.S.
Calle. 21 #1-21, Barrio San Nicolas, Cali
Tel. +57 (2) 4897647
ingenieria@solucionesneumaticas.com
www.solucionesneumaticas.com

ECUADOR
AINSA S.A Guayaquil City
Av. Juan Tanca Marengo
Km 2,5 y Agustín Freire
EC090509, Guayaquil City
Tel. +593-4 3712670
info@ainsa.com.ec
www.ainsa.com.ec

PERU
Neumatec Perù S.A.C.
Calle General Suárez 1023,
Miraflores, Lima 18
Tel. +51 (1) 4442499
ventas@neumatecperu.com
www.neumatecperu.com

WEF Perù S.A.C.
Jr. Dinamarca 1427,
LIMA 01, Cercado de Lima
Tel. +511 4255740
oficinacentral@wefperu.com
www.wefperu.com

URUGUAY
Secoin S.A
General Aguilar 1270 bis,
Gral. Fausto Aguilar 1270,
11800 Departamento de Montevideo
Tel. +598 2209 3815
ventas@secoin.com.uy
www.secoin.com.uy

VENEZUELA
Sinteco Barquisimento
AV.Las Industrias Km2,
Edif. Centro de servicios
mercantiles local 2, Barquisimeto
Tel. +58 251 4432555
sintecobarqto@gmail.com
www.sintecobqto.com.ve

WORLDWIDE NETWORK

AFRICA

ALGERIA
C.M.P.R. Sarl
23 Rue Lalla Fatma N'Soumeur Hassen
Badi El-Harrach, Algeri
Tel. +213 21 82 70 69

EGYPT
Egyptian Engineering
Shop 6 building no 1 Jordan co.
10th Of Ramadan City, Egitto
Tel. +20554368385
Fax: +20554368385
Email: info@eefhydropneu.com
www.eefhydropneu.com

GHANA
Cemix Limited
34 SPINTEX ROAD-ACCRA-GHANA-WEST
Tel. +233 0302 817030
sales@cemixghana.com
www.cemixghana.com

MOROCCO
R2i TFZ
Ilot 87, 1er étage, Bureau 20,
zone franche d'Exportation Tanger
Tel. +212 539 39 10 17
r2itfz@r2imaroc.ma
www.r2itfz.com

TUNISIA
L'Equipement moderne
86, Av. de Carthage, 1000, Tunisi
Tel. +216 71 343844
equipement.moderne@planet.tn
www.lequipementmoderne.com

ASIA

SAUDI ARABIA
Arabian Universal Establishment for Trading
Southern Shopping Center, P.O BOX 3105
21471, Jeddah
Tel. +966 26 477159
www.arabianuniversal.com

CHINA
Pneumax Pneumatic
Equipments Co., Ltd.
No. 76, Jinma Rd., Jiufu Economic
Development Zone, Jiuting Town
201615, PRC, Shanghai
Tel. +86 (21) 57763100
sales@pneumaxchina.com
www.pneumaxchina.com

UNITED ARAB EMIRATES
Fine Industrial & Agri ENG. Services
P. O. BOX 5763, Sharja UAE
Tel. +971 (6) 5335434
fineinds@emirates.net.ae

PHILIPPINES
Integrated Hydro-Pneumatic
SYSTEMS, INC.
N°4 St. Thomas Avenue,
Lopez Commercial Area
Sucat, Parañaque City
Tel. +632 02 820-0569
integhps@iconex.net

JORDAN
Al Sultan Company
for Industrial Equipment
P.O. Box 620996
11162, Amman
Tel: + 962 6 4753764
omar@alsultanco.com
www.alsultanco.com

INDIA
Pneumax Pneumatic
India Pvt. Ltd.
D-82, Hosiery Complex, Phase-II extn.
201305, Noida, UP
Tel. +91 (120) 4352560 / 61 / 62
info@pneumax-india.com
www.pneumax-india.com

INDONESIA
Managed by Pneumax Singapore Pte Ltd

PT. Mutiara Citramulia Teknindo
Ruko Karawaci Residence Blok A1,
No. 17 Jl. Raya
Legok. Bojong Nangka Kelapa Dua
Serpong-Tangerang 15810, Banten, 15810,
Giacarta
Tel. +62 21 29324792
pneumaxmct@cbn.net.id
www.pneumaxspa.com/ENG

IRAN
Ital Electro Pneumatic
NO. 204-2ND FLOOR-TAGHINIA
BLDG-SOUTH SA'ADI STREET
114715719, Teheran
Tel. +98 (21) 33919177
info@italpneum.com

ISRAEL
Ilan & Gavish
Yokneam Ilit 20692
POB 335, Soltam Site
Tel. +972 3 9221824
mail@ilan-gavish.com
www.ilan-gavish.co.il

LEBANON
Yammine Trading Company SARL
Boushrieh, Industrial City, P.O. Box 90 684
Jdeideh, El Metn 1202
2060, Beirut
Tel. +961 1 885520
info@yamminetrading.com
www.yamminetrading.com

MALAYSIA
Managed by Pneumax Singapore Pte Ltd
PSI Pneumatic Control Sdn Bhd
4M (1) Desa Universiti Commercial Complex,
Jalan Sungai Dua
11700, Penang
Tel. +60 4 6592627
sales-psi@airdynamics.com.sg

OMAN
Muscat Pneumatic System & Project LLC
Shop # 1484, Building # 1450B,
P.O. Box 105 PC: 120,
Muscat, Sultanate Of Oman
Tel. +968 24137684
sales@muscat-pneumatic.com

PAKISTAN
Fluid Tekhnik
Suite 101-104 Industrial Town Plaza, Opp. Sind
Madressah, Shahrah-e-Liaquat
74000, Karachi
Tel. +92 (21) 2410335
info@fluid-technik.com.pk
www.fluid-technik.com.pk

SINGAPORE
Pneumax Singapore Pte Ltd
51, Ubi Avenue 1/ 01-16,
Paya Ubi Industrial Park
408933, Singapore
Tel. +65 6392 0581
sales@pneumax.com.sg
www.pneumax.com.sg

SYRIA
Al Rowad Trading
P.O. BOX. 12806
Damasco
Tel: +963 944 228 955
alrowadtrading01@hotmail.com

THAILAND
Thai Agency Engineering Co. LTD
9 Soi Yasoop 2, 2nd-3rd Floor,Vorasin
building,Vipavadirangsit Road,Ladyao
10900, Chumphon
Tel: +66 (2) 6915900
taec@bkk.loxinfo.co.th
www.thai-a.com

OCEANIA

AUSTRALIA
Air & Automation Equipment Ltd.
3-9 Herbert Street
2137 N.S.W., Mortlake
Tel. +61 (2) 9743 1271
airauto@ihug.com.au
www.airautomation.com.au

NEW ZELAND
Automation Equipment Ltd
26 Tawn Place
P. O. BOX 5656, Hamilton (Pukete)
Tel. +64 7 8490281
sales@autoequip.co.nz
www.autoequip.co.nz

PNEUMAX S.p.A.
Via Cascina Barbellina, 10
24050 Lurano (BG) - Italy
P. +39 035 41 92 777
info@pneumaxspa.com
www.pneumaxspa.com

D.CATGEN/EN - 06/2021
PRINTED IN ITALY - 06/2021